Federal Register

12–20–04 Monday
Vol. 69 No. 243 Dec. 20, 2004

Pages 75819–76372

The **FEDERAL REGISTER** (ISSN 0097–6326) is published daily, Monday through Friday, except official holidays, by the Office of the Federal Register, National Archives and Records Administration, Washington, DC 20408, under the Federal Register Act (44 U.S.C. Ch. 15) and the regulations of the Administrative Committee of the Federal Register (1 CFR Ch. I). The Superintendent of Documents, U.S. Government Printing Office, Washington, DC 20402 is the exclusive distributor of the official edition. Periodicals postage is paid at Washington, DC.

The **FEDERAL REGISTER** provides a uniform system for making available to the public regulations and legal notices issued by Federal agencies. These include Presidential proclamations and Executive Orders, Federal agency documents having general applicability and legal effect, documents required to be published by act of Congress, and other Federal agency documents of public interest.

Documents are on file for public inspection in the Office of the Federal Register the day before they are published, unless the issuing agency requests earlier filing. For a list of documents currently on file for public inspection, see *www.archives.gov.*

The seal of the National Archives and Records Administration authenticates the Federal Register as the official serial publication established under the Federal Register Act. Under 44 U.S.C. 1507, the contents of the **Federal Register** shall be judicially noticed.

The **Federal Register** is published in paper and on 24x microfiche. It is also available online at no charge as one of the databases on GPO Access, a service of the U.S. Government Printing Office.

The online edition of the **Federal Register** *www.gpoaccess.gov/nara,* available through GPO Access, is issued under the authority of the Administrative Committee of the Federal Register as the official legal equivalent of the paper and microfiche editions (44 U.S.C. 4101 and 1 CFR 5.10). It is updated by 6 a.m. each day the **Federal Register** is published and includes both text and graphics from Volume 59, Number 1 (January 2, 1994) forward.

For more information about GPO Access, contact the GPO Access User Support Team, call toll free 1-888-293-6498; DC area 202-512-1530; fax at 202-512-1262; or via e-mail at *gpoaccess@gpo.gov.* The Support Team is available between 7:00 a.m. and 9:00 p.m. Eastern Time, Monday–Friday, except official holidays.

The annual subscription price for the **Federal Register** paper edition is $749 plus postage, or $808, plus postage, for a combined **Federal Register, Federal Register** Index and List of CFR Sections Affected (LSA) subscription; the microfiche edition of the **Federal Register** including the **Federal Register** Index and LSA is $165, plus postage. Six month subscriptions are available for one-half the annual rate. The prevailing postal rates will be applied to orders according to the delivery method requested. The price of a single copy of the daily **Federal Register,** including postage, is based on the number of pages: $11 for an issue containing less than 200 pages; $22 for an issue containing 200 to 400 pages; and $33 for an issue containing more than 400 pages. Single issues of the microfiche edition may be purchased for $3 per copy, including postage. Remit check or money order, made payable to the Superintendent of Documents, or charge to your GPO Deposit Account, VISA, MasterCard, American Express, or Discover. Mail to: New Orders, Superintendent of Documents, P.O. Box 371954, Pittsburgh, PA 15250-7954; or call toll free 1-866-512-1800, DC area 202-512-1800; or go to the U.S. Government Online Bookstore site, see *bookstore.gpo.gov.*

There are no restrictions on the republication of material appearing in the **Federal Register.**

How To Cite This Publication: Use the volume number and the page number. Example: 69 FR 12345.

Postmaster: Send address changes to the Superintendent of Documents, Federal Register, U.S. Government Printing Office, Washington DC 20402, along with the entire mailing label from the last issue received.

SUBSCRIPTIONS AND COPIES

PUBLIC	
Subscriptions:	
Paper or fiche	**202–512–1800**
Assistance with public subscriptions	**202–512–1806**
General online information	**202–512–1530; 1–888–293–6498**
Single copies/back copies:	
Paper or fiche	**202–512–1800**
Assistance with public single copies	**1–866–512–1800 (Toll-Free)**
FEDERAL AGENCIES	
Subscriptions:	
Paper or fiche	**202–741–6005**
Assistance with Federal agency subscriptions	**202–741–6005**

What's NEW!

Federal Register Table of Contents via e-mail

Subscribe to FEDREGTOC, to receive the **Federal Register** Table of Contents in your e-mail every day.

If you get the HTML version, you can click directly to any document in the issue.

To subscribe, go to **http://listserv.access.gpo.gov** and select:

Online mailing list archives
FEDREGTOC-L
Join or leave the list

Then follow the instructions.

What's NEW!

Regulations.gov, the award-winning Federal eRulemaking Portal

Regulations.gov is the one-stop U.S. Government web site that makes it easy to participate in the regulatory process.

Try this fast and reliable resource to find all rules published in the *Federal Register* that are currently open for public comment. Submit comments to agencies by filling out a simple web form, or use available e-mail addresses and web sites.

The Regulations.gov e-democracy initiative is brought to you by NARA, GPO, EPA and their eRulemaking partners.

Visit the web site at: **http://www.regulations.gov**

Printed on recycled paper.

Contents

Federal Register

Vol. 69, No. 243

Monday, December 20, 2004

Agency for International Development
PROPOSED RULES
Assistance awards to U.S. non-Governmental organizations; marking requirements, 75885–75887

Agricultural Research Service
PROPOSED RULES
National Arboretum; conduct rules and fee schedule, 75880–75885

Agriculture Department
See Agricultural Research Service
See Forest Service
See Natural Resources Conservation Service
See Rural Utilities Service
NOTICES
Agency information collection activities; proposals, submissions, and approvals, 75896–75898

Alcohol, Tobacco, Firearms, and Explosives Bureau
NOTICES
Commerce in explosives:
Explosive materials list, 76010–76012

Arts and Humanities, National Foundation
See National Foundation on the Arts and the Humanities

Centers for Disease Control and Prevention
NOTICES
Grants and cooperative agreements; availability, etc.:
Iron-out-of-balance and iron overload; patient and physician education and training, 75981–75984
Public safety and health protection:
Special Exposure Cohort at the Mallinckrodt Chemical Co., MO; employee class designation, 75984

Centers for Medicare & Medicaid Services
NOTICES
Agency information collection activities; proposals, submissions, and approvals, 75984–75985

Coast Guard
RULES
Drawbridge operations:
Iowa and Illinois, 75845–75847

Commerce Department
See International Trade Administration
See National Oceanic and Atmospheric Administration

Committee for the Implementation of Textile Agreements
NOTICES
Textile and apparel categories:
Caribbean Basin Trade Partnership Act; commercial availability—
Woven fabric; boy's suits, trousers, and suit-type jackets or blazers, 75933–75934

Comptroller of the Currency
NOTICES
Shared National Credit Program:
Data collection, 76034–76041

Defense Department
See Navy Department
RULES
Federal Acquisition Regulation (FAR):
Electronic representations and certifications, 76340–76347
Employee rights concerning payment of union dues or fees, 76351–76355
Excluded parties list system enhancement, 76346–76350
Introduction, 76339–76341
Mentor protege agreements; approval authority, 76354–76356
Small entity compliance guide, 76357–76359
Special emergency procurement authority, 76349–76352
Technical amendments, 76357–76358
Unallowable costs; cost principles and penalties applicability, 76355–76358
NOTICES
Agency information collection activities; proposals, submissions, and approvals, 75934–75935
Federal Acquisition Regulation (FAR):
Agency information collection activities; proposals, submissions, and approvals, 75935–75936
Meetings:
Defense Science Board, 75936
Privacy Act:
Systems of records, 75936–75937

Delaware River Basin Commission
NOTICES
Meetings and hearings, 75938–75940

Education Department
NOTICES
Agency information collection activities; proposals, submissions, and approvals, 75940
Meetings:
Regional Advisory Committees; real-time online conferences; schedule and agendas, 75940–75941

Employment and Training Administration
NOTICES
Adjustment assistance:
Allegheny Ludlum, 76014
AT&T et al., 76014–76015
Bombardier Transportation, 76015
Drager Medical, 76015–76016
Fleetguard Corp., 76016
Hartford Technologies Co., 76016
Kokoku Wire Industries, 76016
Lucent Technologies, 76017
Rusch, 76017
Tesco Technologies, LLC, 76017

Energy Department
See Federal Energy Regulatory Commission

Environmental Protection Agency
RULES
Air quality implementation plans; approval and promulgation; various States; air quality planning purposes; designation of areas:
West Virginia; withdrawn, 75847

Superfund program:
National oil and hazardous substances contingency plan—
National priorities list update, 75847–75850
PROPOSED RULES
Superfund program:
National oil and hazardous substances contingency plan—
National priorities list update, 75891–75892
NOTICES
Pesticide registration, cancellation, etc.:
Dow AgroSciences LLC, 75948–75950
Reports and guidance documents; availability, etc.:
Inorganic metals risk assessment framework, 75950–75951
Superfund program:
Federal Agency Hazardous Waste Compliance Docket; Federal facilities; list update, 75951–75961

Executive Office of the President
See Presidential Documents

Export-Import Bank
NOTICES
Agency information collection activities; proposals, submissions, and approvals, 75961–75979

Federal Aviation Administration
RULES
Air carrier certification and operations:
Flight crew composition; CFR correction, 75835
Airworthiness directives:
Bombardier, 75830–75833
Raytheon, 75833–75835
Saab, 75826–75829
Class D airspace; correction, 76042

Federal Communications Commission
RULES
Radio stations; table of assignments:
California, 75861
Illinois, 75860
Louisiana and Texas, 75860
Massachusetts and New York, 75860–75861
New Mexico, 75861–75862
Wyoming, 75861
NOTICES
Agency information collection activities; proposals, submissions, and approvals, 75979

Federal Deposit Insurance Corporation
NOTICES
Shared National Credit Program:
Data collection, 76034–76041

Federal Emergency Management Agency
NOTICES
Committees; establishment, renewal, termination, etc.:
U.S. Fire Administration Emergency Management Institute Board of Visitors, 75997

Federal Energy Regulatory Commission
NOTICES
Complaints filed:
San Diego Gas & Electric Co., et al., 75942–75943
Electric rate and corporate regulation filings, 75943–75946
Environmental statements; availability, etc.:
Progress Energy Carolinas, Inc., 75946
Environmental statements; notice of intent:
Seafarer US Pipeline System, Inc., 75946–75948
Applications, hearings, determinations, etc.:
ANR Pipeline Co., 75942
Dominion Energy New England, Inc., et al., 75942

Federal Maritime Commission
RULES
Ocean shipping in foreign commerce:
Non-vessel-operating common carrier service arrangements, 75850–75860

Federal Reserve System
RULES
Extensions of credit by Federal Reserve Banks (Regulation A):
Primary and secondary credit—
Rates; increase approval, 75819–75820
NOTICES
Banks and bank holding companies:
Formations, acquisitions, and mergers, 75979–75980
Permissible nonbanking activities, 75980
Home mortgage disclosure (Regulation C):
Mortgage lending data; revised formats for public disclosure, 76189–76296
Shared National Credit Program:
Data collection, 76034–76041

Fish and Wildlife Service
PROPOSED RULES
Migratory bird hunting:
Alaska; spring/summer migratory bird subsistence harvest, 76361–76368
Migratory bird permits:
Connecticut; Federal falconry standard compliance, 75892–75895
NOTICES
Endangered and threatened species:
Recovery plans—
Coastal dunes milk-vetch et al., 76002–76003
Robust spineflower, 76003–76004

Food and Drug Administration
NOTICES
Meetings:
Advisory Committees; tentative schedule (2005), 75985–75987
Reports and guidance documents; availability, etc.:
ANDAs; pharmaceutical solid polymorphism; chemistry, manufacturing, and controls information, 75987–75988

Forest Service
NOTICES
Committees; establishment, renewal, termination, etc.:
Black Hills National Forest Advisory Board, 75898
Environmental statements; notice of intent:
Sierra National Forest, CA, 75898–75899
Meetings:
Resource Advisory Committees—
Mendocino County, 75899–75900
Mineral County, 75900
Southwest Idaho, 75900

General Services Administration
RULES
Federal Acquisition Regulation (FAR):
Electronic representations and certifications, 76340–76347

Employee rights concerning payment of union dues or fees, 76351–76355
Excluded parties list system enhancement, 76346–76350
Introduction, 76339–76341
Mentor protege agreements; approval authority, 76354–76356
Small entity compliance guide, 76357–76359
Special emergency procurement authority, 76349–76352
Technical amendments, 76357–76358
Unallowable costs; cost principles and penalties applicability, 76355–76358
NOTICES
Federal Acquisition Regulation (FAR):
Agency information collection activities; proposals, submissions, and approvals, 75935–75936
Privacy Act:
Systems of records, 75980–75981

Government Accountability Office
PROPOSED RULES
Practice and procedure:
Bid protest regulations, 75878–75880

Health and Human Services Department
See Centers for Disease Control and Prevention
See Centers for Medicare & Medicaid Services
See Food and Drug Administration
See National Institutes of Health
See Substance Abuse and Mental Health Services Administration

Homeland Security Department
See Coast Guard
See Federal Emergency Management Agency
See U.S. Citizenship and Immigration Services

Housing and Urban Development Department
NOTICES
Agency information collection activities; proposals, submissions, and approvals, 75999–76001
Grant and cooperative agreement awards:
Community Outreach Partnership Centers, 76001–76002
Early Doctoral Student Research Grant Program, 76002

Indian Affairs Bureau
NOTICES
Tribal-State Compacts approval; Class III (casino) gambling:
Buena Vista Rancheria of Me-Wuk Indians, CA, 76004
Coyote Valley Band of Pomo Indians, CA, 76004
Flandreau Santee Sioux Executive Committee, SD, 76005
Fort Mojave Indian Tribe, CA, 76004
Sac and Fox Tribe, MS and IA, 76004–76005

Interior Department
See Fish and Wildlife Service
See Indian Affairs Bureau
See Land Management Bureau
See National Park Service
See Reclamation Bureau
See Surface Mining Reclamation and Enforcement Office

International Trade Administration
NOTICES
Antidumping:
Chlorinated isocyanurates from—
Spain, 75902–75907
Corrosion-resistant carbon steel flat products from—
Japan, 75907–75913
Folding metal tables and chairs from—
China, 75913–75915
Honey from—
China, 75915–75916
Small diameter circular seamless carbon and alloy steel standard, line and pressure pipe from—
Brazil, 75916
Softwood lumber products from—
Canada, 75916–75930
Stainless steel sheet and strip in coils from—
Germany, 75930–75933

International Trade Commission
NOTICES
Import investigations:
Circular welded carbon quality line pipe from—
China, 76009
Various countries, 76008–76009
Outboard engines from—
Japan, 76009

Justice Department
See Alcohol, Tobacco, Firearms, and Explosives Bureau
See Justice Programs Office
NOTICES
Agency information collection activities; proposals, submissions, and approvals, 76009–76010

Justice Programs Office
NOTICES
Agency information collection activities; proposals, submissions, and approvals, 76012–76014

Labor Department
See Employment and Training Administration

Land Management Bureau
NOTICES
Meetings:
Resource Advisory Councils—
John Day/Snake, 76005

National Aeronautics and Space Administration
RULES
Federal Acquisition Regulation (FAR):
Electronic representations and certifications, 76340–76347
Employee rights concerning payment of union dues or fees, 76351–76355
Excluded parties list system enhancement, 76346–76350
Introduction, 76339–76341
Mentor protege agreements; approval authority, 76354–76356
Small entity compliance guide, 76357–76359
Special emergency procurement authority, 76349–76352
Technical amendments, 76357–76358
Unallowable costs; cost principles and penalties applicability, 76355–76358
NOTICES
Federal Acquisition Regulation (FAR):
Agency information collection activities; proposals, submissions, and approvals, 75935–75936

National Foundation on the Arts and the Humanities
NOTICES
Meetings:
Arts Advisory Panel, 76017–76018

National Highway Traffic Safety Administration
RULES
Motor vehicle safety standards:
Brake hoses, 76297–76337

National Institutes of Health
NOTICES
Agency information collection activities; proposals, submissions, and approvals, 75988–75989
Inventions, Government-owned; availability for licensing, 75989–75994
Meetings:
National Human Genome Research Institute, 75994
National Institute on Drug Abuse, 75994–75995
National Library of Medicine, 75995
Scientific Review Center, 75995–75996
Patent licenses; non-exclusive, exclusive, or partially exclusive:
Phase2 Discovery, 75996

National Oceanic and Atmospheric Administration
RULES
Fishery conservation and management:
Alaska; fisheries of Exclusive Economic Zone—
Pollock and Pacific cod, 75865–75877
Northeastern United States fisheries—
Summer flounder, 75864
Marine mammals:
Commercial fishing authorizations—
Atlantic Large Whale Take Reduction Plan, 75862–75864
NOTICES
Meetings:
National Marine Sanctuary Program; Sanctuary Advisory Councils; chairs, 75933

National Park Service
NOTICES
Native American human remains, funerary objects; inventory, repatriation, etc.:
Effigy Mounds National Monument, Harpers Ferry, IA, 76005–76006
Fowler Museum, University of California, Los Angeles, CA, 76006–76008

National Science Foundation
NOTICES
Antarctic Conservation Act of 1978; permit applications, etc., 76018

Natural Resources Conservation Service
NOTICES
Environmental statements; availability, etc.:
Beaver Creek Watershed Project, CO, 75900

Navy Department
NOTICES
Privacy Act:
Systems of records, 75937–75938

Nuclear Regulatory Commission
NOTICES
Committees; establishment, renewal, termination, etc.:
Reactor Safeguards Advisory Committee, 76021
Meetings; Sunshine Act, 76021–76022
Applications, hearings, determinations, etc.:
All Tech Corp., 76019
STP Nuclear Operating Co., et al., 76019–76021

Presidential Documents
PROCLAMATIONS
Special observances:
60th Anniversary of the Battle of the Bulge (Proc. 7855), 76369–76372

Reclamation Bureau
NOTICES
Central Valley Project Improvement Act:
Water management plans—
Citrus Heights Water District et al., 76008

Research and Special Programs Administration
RULES
Hazardous materials:
Transportation—-
Harmonization with UN Recommendations, International Maritime Dangerous Goods Code, and International Civil Aviation Organization's technical instructions, 76043–76187
NOTICES
Meetings:
Gas pipeline integrity management inspection protocols; workshop, 76028

Rural Utilities Service
NOTICES
Agency information collection activities; proposals, submissions, and approvals, 75900
Environmental statements; availability, etc.:
North Carolina Electric Membership Corp., 75900–75902

Securities and Exchange Commission
NOTICES
Agency information collection activities; proposals, submissions, and approvals, 76022
Self-regulatory organizations; proposed rule changes:
National Association of Securities Dealers, Inc., 76022–76026

Small Business Administration
RULES
Government contracting programs:
Subcontracting, 75820–75826
NOTICES
Disaster loan areas:
Florida, 76026
Applications, hearings, determinations, etc.:
Point West Ventures, L.P., 76026

Social Security Administration
NOTICES
Meetings:
Ticket to Work and Work Incentives Advisory Panel, 76027

State Department
NOTICES
Meetings:
International Telecommunication Advisory Committee, 76027
Shipping Coordinating Committee, 76027–76028

Substance Abuse and Mental Health Services Administration
NOTICES
Grants and cooperative agreements; availability, etc.:
Substance Abuse Treatment Center—
State adolescent substance abuse treatment coordination, 75997

Surface Mining Reclamation and Enforcement Office
RULES
Permanent program and abandoned mine land reclamation plan submissions:
Kentucky, 75835–75839

Surface Transportation Board
NOTICES
Rail carriers:
Cost-of-capital—
Railroad industry's 2004 decision, 76029
Railroad operation, acquisition, construction, etc.:
CSX Transportation, Inc., 76029–76030
Wisconsin & Southern Railroad Co., 76030

Textile Agreements Implementation Committee
See Committee for the Implementation of Textile Agreements

Thrift Supervision Office
NOTICES
Shared National Credit Program:
Data collection, 76034–76041

Transportation Department
See Federal Aviation Administration
See National Highway Traffic Safety Administration
See Research and Special Programs Administration
See Surface Transportation Board

Treasury Department
See Comptroller of the Currency
See Thrift Supervision Office
RULES
Practice and procedure:
Practice before Internal Revenue Service, 75839–75845
PROPOSED RULES
Practice and procedure:
Practice before Internal Revenue Service; hearing, 75887–75891
NOTICES
Agency information collection activities; proposals, submissions, and approvals, 76030–76034

U.S. Citizenship and Immigration Services
NOTICES
Employment eligibility confirmation; pilot programs; expansion, 75997–75999

Separate Parts In This Issue

Part II
Transportation Department, Research and Special Programs Administration, 76043–76187

Part III
Federal Reserve System, 76189–76296

Part IV
Transportation Department, National Highway Traffic Safety Administration, 76297–76337

Part V
Defense Department; General Services Administration; National Aeronautics and Space Administration, 76339–76359

Part VI
Interior Department, Fish and Wildlife Service, 76361–76368

Part VII
Executive Office of the President, Presidential Documents, 76369–76372

Reader Aids
Consult the Reader Aids section at the end of this issue for phone numbers, online resources, finding aids, reminders, and notice of recently enacted public laws.

To subscribe to the Federal Register Table of Contents LISTSERV electronic mailing list, go to http://listserv.access.gpo.gov and select Online mailing list archives, FEDREGTOC-L, Join or leave the list (or change settings); then follow the instructions.

CFR PARTS AFFECTED IN THIS ISSUE

A cumulative list of the parts affected this month can be found in the Reader Aids section at the end of this issue.

3 CFR
Proclamations:
7855 76371

4 CFR
Proposed Rules:
21 75878

7 CFR
Proposed Rules:
500 75880

12 CFR
201 75819

13 CFR
125 75820

14 CFR
39 (3 documents) 75826, 75830, 75833
71 76042
121 75835

22 CFR
Proposed Rules:
226 75885

30 CFR
917 75835

31 CFR
10 75839
Proposed Rules:
10 75887

33 CFR
117 75845

40 CFR
52 75847
81 75847
300 75847
Proposed Rules:
300 75891

46 CFR
531 75850

47 CFR
73 (6 documents) 75860, 75861

48 CFR
Ch. 1 (2 documents) 76340, 76358
2 (4 documents) 76341, 76347, 76350, 76352
4 76341
9 76347
11 76358
12 76350
13 76350
14 76341
15 (2 documents) 76341, 76350
19 76355
22 (2 documents) 76347, 76352
28 76347
41 76358
42 76356
44 (2 documents) 76347, 76358
51 76358
52 (4 documents) 76341, 76347, 76352, 76358

49 CFR
171 76044
172 76044
173 76044
175 76044
176 76044
178 76044
180 76044
571 76298

50 CFR
229 75862
648 75864
679 75865
Proposed Rules:
21 75892
92 76362

Rules and Regulations

Federal Register
Vol. 69, No. 243
Monday, December 20, 2004

This section of the FEDERAL REGISTER contains regulatory documents having general applicability and legal effect, most of which are keyed to and codified in the Code of Federal Regulations, which is published under 50 titles pursuant to 44 U.S.C. 1510.

The Code of Federal Regulations is sold by the Superintendent of Documents. Prices of new books are listed in the first FEDERAL REGISTER issue of each week.

FEDERAL RESERVE SYSTEM

12 CFR Part 201

[Regulation A]

Extensions of Credit by Federal Reserve Banks

AGENCY: Board of Governors of the Federal Reserve System.

ACTION: Final rule.

SUMMARY: The Board of Governors of the Federal Reserve System (Board) has adopted final amendments to its Regulation A to reflect the Board's approval of an increase in the primary credit rate at each Federal Reserve Bank. The secondary credit rate at each Reserve Bank automatically increased by formula as a result of the Board's primary credit rate action.

DATES: The amendments to part 201 (Regulation A) are effective December 20, 2004. The rate changes for primary and secondary credit were effective on the dates specified in 12 CFR 201.51, as amended.

FOR FURTHER INFORMATION CONTACT: Jennifer J. Johnson, Secretary of the Board (202/452–3259); for users of Telecommunication Devices for the Deaf (TDD) only, contact 202/263–4869.

SUPPLEMENTARY INFORMATION: The Federal Reserve Banks make primary and secondary credit available to depository institutions as a backup source of funding on a short-term basis, usually overnight. The primary and secondary credit rates are the interest rates that the twelve Federal Reserve Banks charge for extensions of credit under these programs. In accordance with the Federal Reserve Act, the primary and secondary credit rates are established by the boards of directors of the Federal Reserve Banks, subject to the review and determination of the Board.

The Board approved requests by the Reserve Banks to increase by 25 basis points the primary credit rate in effect at each of the twelve Federal Reserve Banks, thereby increasing from 3.00 percent to 3.25 percent the rate that each Reserve Bank charges for extensions of primary credit. As a result of the Board's action on the primary credit rate, the rate that each Reserve Bank charges for extensions of secondary credit automatically increased from 3.50 percent to 3.75 percent under the secondary credit rate formula. The final amendments to Regulation A reflect these rate changes.

The 25-basis-point increase in the primary credit rate was associated with a similar increase in the target for the federal funds rate (from 2.00 percent to 2.25 percent) approved by the Federal Open Market Committee (Committee) and announced at the same time. A press release announcing these actions indicated that:

> The Committee believes that, even after this action, the stance of monetary policy remains accommodative and, coupled with robust underlying growth in productivity, is providing ongoing support to economic activity. Output appears to be growing at a moderate pace despite the earlier rise in energy prices, and labor market conditions continue to improve gradually. Inflation and longer-term inflation expectations remain well contained.
>
> The Committee perceives the upside and downside risks to the attainment of both sustainable growth and price stability for the next few quarters to be roughly equal. With underlying inflation expected to be relatively low, the Committee believes that policy accommodation can be removed at a pace that is likely to be measured. Nonetheless, the Committee will respond to changes in economic prospects as needed to fulfill its obligation to maintain price stability.

Regulatory Flexibility Act Certification

Pursuant to the Regulatory Flexibility Act (5 U.S.C. 605(b)), the Board certifies that the new primary and secondary credit rates will not have a significantly adverse economic impact on a substantial number of small entities because the final rule does not impose any additional requirements on entities affected by the regulation.

Administrative Procedure Act

The Board did not follow the provisions of 5 U.S.C. 553(b) relating to notice and public participation in connection with the adoption of these amendments because the Board for good cause determined that delaying implementation of the new primary and secondary credit rates in order to allow notice and public comment would be unnecessary and contrary to the public interest in fostering price stability and sustainable economic growth. For these same reasons, the Board also has not provided 30 days prior notice of the effective date of the rule under section 553(d).

12 CFR Chapter II

List of Subjects in 12 CFR Part 201

Banks, Banking, Federal Reserve System, Reporting and recordkeeping.

Authority and Issuance

■ For the reasons set forth in the preamble, the Board is amending 12 CFR Chapter II to read as follows:

PART 201—EXTENSIONS OF CREDIT BY FEDERAL RESERVE BANKS (REGULATION A)

■ 1. The authority citation for part 201 continues to read as follows:

Authority: 12 U.S.C. 248(i)–(j), 343 *et seq.*, 347a, 347b, 347c, 348 *et seq.*, 357, 374, 374a, and 461.

■ 2. In § 201.51, paragraphs (a) and (b) are revised to read as follows:

§ 201.51 Interest rates applicable to credit extended by a Federal Reserve Bank.[1]

(a) *Primary credit.* The interest rates for primary credit provided to depository institutions under § 201.4(a) are:

Federal reserve bank	Rate	Effective
Boston	3.25	December 14, 2004.
New York	3.25	December 14, 2004.

[1] The primary, secondary, and seasonal credit rates described in this section apply to both advances and discounts made under the primary, secondary, and seasonal credit programs, respectively.

Federal reserve bank	Rate	Effective
Philadelphia	3.25	December 14, 2004.
Cleveland	3.25	December 14, 2004.
Richmond	3.25	December 14, 2004.
Atlanta	3.25	December 14, 2004.
Chicago	3.25	December 14, 2004.
St. Louis	3.25	December 15, 2004.
Minneapolis	3.25	December 14, 2004.
Kansas City	3.25	December 14, 2004.
Dallas	3.25	December 14, 2004.
San Francisco	3.25	December 14, 2004.

(b) *Secondary credit.* The interest rates for secondary credit provided to depository institutions under § 201.4(b) are:

Federal reserve bank	Rate	Effective
Boston	3.75	December 14, 2004
New York	3.75	December 14, 2004
Philadelphia	3.75	December 14, 2004
Cleveland	3.75	December 14, 2004
Richmond	3.75	December 14, 2004
Atlanta	3.75	December 14, 2004
Chicago	3.75	December 14, 2004
St. Louis	3.75	December 15, 2004
Minneapolis	3.75	December 14, 2004
Kansas City	3.75	December 14, 2004
Dallas	3.75	December 14, 2004
San Francisco	3.75	December 14, 2004

* * * * *

By order of the Board of Governors of the Federal Reserve System, December 15, 2004.

Jennifer J. Johnson,

Secretary of the Board.

[FR Doc. 04–27788 Filed 12–17–04; 8:45 am]

BILLING CODE 6210–02–P

SMALL BUSINESS ADMINISTRATION

13 CFR Part 125

RIN 3245–AF12

Small Business Government Contracting Programs; Subcontracting

AGENCY: U.S. Small Business Administration.

ACTION: Final rule.

SUMMARY: This final rule amends the U.S. Small Business Administration (SBA) regulations government small business subcontracting to address comments received in response to SBA's proposed rule on subcontracting, which was published in the **Federal Register** on October 20, 2003. The final rule also addresses comments in response to SBA's earlier proposed rule on contract bundling, which was published in the **Federal Register** on January 31, 2003. Specifically, this final rule provides a list of factors to consider in evaluating a prime contractor's performance and good-faith efforts to achieve the requirements in its subcontracting plan. The final rule also authorizes the use of goals in subcontracting plans, and/or past performance in meeting such goals, as a factor in source selection when placing orders against Federal Supply Schedules, government-wide acquisition contracts, and multi-agency contracts. In addition, this final rule implements statutory provisions and other administrative procedures relating to subcontracting goals and assistance. In particular, the final rule lists the various categories of small businesses that must be afforded maximum practicable subcontracting opportunities, and clarifies the responsibilities of prime contractors and SBA's Commercial Market Representatives (CMRs) under the subcontracting assistance program. The final rule also supplies guidance on Subcontracting Orientation and Assistance Reviews (SOARs), which CMRs perform to assist prime contractors in their efforts to understand and comply with the requirements governing the small business subcontracting assistance program.

DATES: This rule is effective on December 20, 2004.

FOR FURTHER INFORMATION CONTACT: Dean Koppel, Assistant Administrator, Office of Policy and Research, (202) 401–8150 or *dean.koppel@sba.gov.*

SUPPLEMENTARY INFORMATION:

A. Background

On January 31, 2003, SBA published a proposed rule in the **Federal Register,** 67 FR 47244, to solicit comments on its proposal to implement several recommendations included in the Office of Management and Budget's October 2002 report, entitled ''Contract Bundling: A Strategy for Increasing Federal Contracting Opportunities for Small Business.'' Several of the responding commenters identified the need for more guidance on evaluating large prime contractor performance in awarding subcontracts to small businesses and their efforts to achieve subcontracting plans, including examples of what types of conduct constitute ''good-faith'' efforts to comply with subcontracting plans. SBA thought that this suggestion was valid; accordingly, on October 20, 2003, the agency published a proposed rule addressing these as well as other major issues in subcontracting.

In response to the proposed rule published on October 20, 2003, which had a 60-day public-comment period, SBA received 19 written comments. The commenters included three members of Congress (two letters, one signed by two members), three Federal agencies (including SBA's own Office of Advocacy), two prime contractors, seven trade associations or small-business advocacy groups, four small businesses, and one private citizen

formerly employed by the Congress who is now working in academia. The specific comments are addressed in the section-by-section analysis of comments below. However, two of the commenters' responses may require additional review through a different venue. One of these responses was from a participant in the Department of Defense (DoD) Test Program for Comprehensive Subcontracting Plans (DoD Test Program), and the other was from a major U.S. corporation that currently operates under a commercial subcontracting plan. In both cases, their concerns are unique to their own situations and do not justify substantial changes to this rule.

The comments received from the corporation with a commercial subcontracting plan were far-reaching, and some of the suggestions would result in radical changes to the subcontracting program. For example, the commenter suggests a new formula for computing subcontracting goals for companies with commercial subcontracting plans. SBA did not adopt this suggestion because it is outside the scope of this rule.

The two references to SBAS's PRO-Net in the proposed rule have been changed to the Central Contractor Registration (CCR) in this final rule, to reflect the fact that SBA's PRO-Net was folded into the CCR effective January 1, 2004. In addition, the fourth exception to the requirement for a subcontracting plan cited in the proposed rule at § 1225.3(c)(3)(iv) has been deleted in this final rule because this exception applies primarily to contracts awarded prior to October 24, 1978, the date that Public law 95–507 was enacted by the Congress. That exception involved modifications to contracts that did not originally contain the clause at 48 CFR 52.219–8. It is SBA's conclusion that this exception is no longer needed.

B. Section-by-Section Analysis of Comments

1. Comments on the General Requirement

SBA received two comments on § 125.3(a), General. One commenter suggested adding the phrase ''unless otherwise exempt'' before the phrase ''other-than-small'' in the second sentence to clarify the fact that there are some exceptions to the requirement that prime contractors submit subcontracting plans for certain Federal contracts. (The exceptions are listed in the regulation at the beginning of the following paragraph, § 125.3(b).) The same commenter also suggested changing the word ''firms'' to ''business concerns'' and adding the word ''appropriate'' before ''contracting agency'' in the same sentence. SBA considers all of these suggestions to be constructive and has revised the language accordingly. The other commenter expressed concern that SBA was changing the phrase ''maximum utilization'' in the current version of the regulation to ''maximum practicable subcontracting opportunities'' and said that this change would convey a dangerous message to those who are required to participate in the Subcontracting Assistance Program. SBA reviewed the statute and found that the Congress itself had used the phrase ''maximum practicable opportunity'' in the legislation; therefore, SBA decided against making this change.

2. Comments on the Responsibilities of Prime Contractors

SBA received ten comments on § 125.3(b), Responsibilities of prime contractors. All of these commenters misunderstood the proposed rule to mean that SBA was either intending to require small businesses to submit subcontracting plans and/or planning to impose new reporting requirements on them. In fact, the Small Business Act specifically excludes small business concerns from the requirement to submit a subcontracting plan. Several commenters criticized SBA for its failure to perform an Initial Regulatory Flexibility Analysis (IRFA). One commenter suggested that SBA require subcontracting plans from small businesses only when the small business intends to subcontract some of the contract. In other words, if a small-business prime contractor performs 100 percent of the contract with its own labor, a subcontracting plan would not be required. This suggestion cannot be implemented without an amendment to the legislation (15 U.S.C. 637(d)(4)), which currently prohibits the Government from requiring small businesses to submit subcontracting plans under any circumstances. Therefore, SBA cannot adopt this suggestion. Since SBA does not intend to require subcontracting plans or reports from small business, no IRFA is required.

It was never SBA's intent to require small businesses to submit subcontracting plans or to impose new reporting requirements on them. However, since the language in the proposed rule has apparently caused some confusion, SBA has added language to § 125.3(b) clarifying that a small business cannot be required to submit a formal subcontracting plan or a subcontracting report (*see* § 125.3(b)(2)). Since the clarifying language has been added as § 125.3(b)(2), § 125.3(b)(2) in the proposed rule has been redesignated § 125.3(b)(3) in the final rule.

It should be noted that, under § 19.1202 of the Federal Acquisition Regulation (FAR), 48 CFR 19.1202, all offerors, including small business offerors, submit targets for small disadvantaged business (SDB) participation, and the successful offeror must submit a final report on SDB participation at contract completion. The requirement to submit targets for SDB participation does not constitute a subcontracting plan; in any case, that provision and related reporting requirement are separate and apart from the subcontracting plan requirements discussed in this regulation.

One commenter suggested revising § 125.3(b)(1) in its entirety to state: ''While a small businesses prime contractor is exempt from the requirement to establish a subcontracting plan, it is encouraged to provide maximum practicable opportunity for small businesses to participate in the performance of the contract, consistent with the efficient performance of the contract.'' SBA thinks that this suggestion is excellent; however, we believe that the suggested wording serves its purpose better under § 125.3(b)(2), rather than under § 125.3(b)(1), and we have therefore added it as a second sentence under § 125.3(b)(2).

The same commenter suggested revising the proposed § 125.3(b)(2) (§ 125.3(b)(3) in the final rule) to add the phrase ''as appropriate for the procurement.'' SBA agrees with this suggestion and has made the change. SBA has also added the word ''may'' and ''one or more of the following actions'' to the same sentence to clarify the face that each of the items in the list (§ 125.3(b)(2)(i) through (viii) of the proposed rule, § 125.3(b)(3)(1) through (ix) of the final rule) will not necessarily be applicable to every procurement. To ensure consistency throughout the final rule, SBA also added similar language to § 125.3(d)(1).

One commenter questioned the omission of the mentor-protégé program from the list at the proposed § 125.3(b)(2). Under 15 U.S.C. § 637(d)(11), prime contractors acting as mentors are allowed to receive credit towards their subcontracting goals for developmental assistance to their protégés. It is noted that many Federal agencies, such as the DoD, have Federal Acquisition Regulation Supplements addressing their mentor-protégé programs, and in fact SBA has a separate regulation dealing with its own

mentor-protégé; program (13 CFR 124.520). However, SBA agrees that adding a separate item to the list at the proposed § 125.3(b)(2) strengthens this regulation, and we have made this change by adding a new item as § 125.3(b)(3)(ix).

Two commenters said that the provisions at the proposed § 125.3(b)(2)(vii) (§ 124.3(b)(2)(vii) of the final rule), which addresses assistance to small business in obtaining bonding, lines of credit, required insurance, necessary equipment, supplies, materials, or services, could lead to improper arrangements between large and small businesses in terms of control, conflicts of interest, and fair dealing. SBA has carefully considered this argument and concluded that, where any impropriety in this regard is alleged, it should be referred to the contracting officer for review under the procedures set forth in Part 121 of this regulation or other applicable procedures. However, when the assistance is properly structured so as to comply with applicable legal authority, a large business may provide this type of assistance without violating any laws or regulations. Therefore, SBA has retained this provision as written.

3. Comments on the Additional Responsibilities of Large Prime Contractors

One commenter took issue with the word ''utilization'' in the phrase ''maximum practicable utilization'' at § 125.3(c)(1)(i). SBA agrees with this comment and has changed the phrase to read ''maximum practicable opportunity,'' which, as noted above, is consistent with the language in the statute.

Two commenters complimented SBA on changing the dollar threshold for the mandatory pre-award written notification to unsuccessful offerors from $10,000 to $100,000, which is the simplified acquisition threshold. (§ 125.3(c)(1)(v)). Another commenter disagreed with this proposed change, saying it would be harmful to small businesses. Two other commenters disagreed with the requirement altogether, saying that there is no rationale for such a rule. One of the commenters in favor of the change suggested that the final rule could encourage prime contractors, as a good business practice, to provide the same written notification to unsuccessful offerors below this threshold. SBA agrees with this suggestion and believes that it will address the concerns of the commenter who said that this change would be harmful to small businesses. SBA did not adopt the comments of the two commenters who said that there is no rationale for such a rule. If unsuccessful offerors are notified in advance of the proposed awardee, they may protest or bring eligibility issues to the attention of the prime contractor. In addition, this requirement is also applicable to contracting officers in the Federal government (*see* 48 CFR 15.503(a)(2) and SBA strives to make its prime and subcontracting programs consistent where practical. SBA has added a provision at § 125.3(c)(1)(vi) to encourage prime contractors, as a good business practice, to provide written notification to unsuccessful offerors below $100,000. Two commenters questioned SBA's reference to an electronic database in § 125.3(c)(1)(iii). In fact, as part of the Integrated Acquisition Environment (IAE), the Government is working aggressively to develop and implement such a database. Therefore, SBA has made no change to § 125.3(c)(1)(iii).

In response to § 125.3(b)(2), which addresses commercial subcontracting plans, one commenter pointed out that the plan template required by the Federal government for contractors with commercial subcontracting plans is based on the contractor's fiscal year (usually the calendar year), but the reports are required for the Federal government's fiscal year. SBA is aware of this problem and has addressed it separately by means of a formal case submitted to the Federal Acquisition Regulation (FAR Council). The electronic database mentioned above is also being designed to correct this problem.

Another commenter questioned the policy set forth in § 125.3(c)(2) that permits the contracting officer of the agency that originally approved a commercial plan to exercise the functions of the contracting officer on behalf of all agencies that award contracts covered by the plan. This is a practical approach since a choice must be made as to which agency administers the plan and the appropriate choice is the agency that originally approved it. This policy has been in effect for some time and no significant problems or issues have arisen as a result. Moreover, an almost identical provision currently exists in the Federal Acquisition Regulation (48 CFR) (*see* 48 CFR 19.705–7(f). For these reasons, SBA has not changed the wording of this provision.

4. Comments on Determination of Good-Faith Efforts

At least eight commenters, including two members of Congress, objected to the provision at § 125.3(d)(2) that would include, in the determination of good-faith efforts evidence that other contractors awarded contracts of similar scope, size or dollar value had not achieved or exceeded the goals stated in their subcontracting plans. One commenter pointed out that the Federal government, using this guidance, could penalize a company that is in complete compliance based on a comparison to other companies that are performing better; or, alternatively, the federal government could compare a company that is barely complying to companies that are complete failures and conclude that it is making a good-faith effort when it is not. SBA agrees with these comments and has stricken this provision from the final rule.

One commenter pointed out that prime contractors are often penalized for failing to achieve their goal in one socio-economic category, even though they may have exceeded their goal in another area. SBA believes that this is a valid concern, and we have replaced the provision stricken from § 125.3(d)(2), as noted above, with a statement addressing this point. This subparagraph now reads, in part:

> Evidence that a large business prime contractor has made a good-faith effort to comply with its subcontracting plan or other subcontracting responsibilities includes supporting documentation that:
>
> (1) The contractor performed one or more of the actions described in paragraph (b) of this section, as appropriate for the procurement; and
>
> (2) Although the contractor may have failed to achieve its goal in one socio-economic category, it exceeded its goal by an equal or greater amount in one or more of the other categories.

One commenter from another Federal agency pointed out that the Federal Acquisition Regulation (48 CFR) defines the failure to make a good-faith effort to comply with a subcontracting plan as the ''willful or intentional failure to perform in accordance with the requirements of the subcontracting plan, or willful or intentional action to frustrate the plan.'' This commenter recommends using this language in the final rule. SBA has decided not to adopt this suggestion because it believes that the language is too narrow and could be subject to misinterpretation. For example, a prime contractor could argue that its failure to make any effort to comply with its subcontracting plan was not willful but merely negligent or unintentional. SBA believes that the nine-item list of actions a prime contractor could take in order to demonstrate good faith efforts provides sufficient guidance concerning the meaning of this term.

5. Comments on CMR Responsibilities

SBA received only two comments on § 125.3(e), CMR Responsibilities, and the commenters were generally in favor of the additional responsibilities. The commenters inquired about the accountability and chain of command, and one commenter suggested that the CMRs should report to either the SBA District Directors or to other SBA managers at the same level. SBA did not make this change, as it is outside the scope of this rule and an established reporting structure is already in place.

A commenter that is a participant in the DoD Test Program asked how SOARs would work for contractors participating in that program. The memorandum of understanding (MOU) between the Defense Contract Management Agency (DCMA) and SBA (see next section) does not prohibit SBA's CMRs from conducting SOARs of contractors participating in the DoD Test Program. Therefore a participant may request a SOAR visit at any time. SBA sees no need to change the subject regulation in response to this comment.

6. Comments on Compliance Reviews

SBA received few comments on § 125.3(f), Compliance Reviews. Most of these were favorable. One commenter said, ''We support the inclusion of this new coverage in the regulations to aid in the understanding of the elements of the compliance review, the ratings to be evaluated, and the standards to be used. This coverage will also help standardize the reviews across the covered contractor base.'' Another commenter pointed out that the regulation does not address what corrective or punitive steps should be taken when a prime contractor receives an unsatisfactory rating. SBA believes that this is addressed adequately in other regulations (*e.g.,* 48 CFR 19.705–7); however, we have added two new subparagraphs, § 125.3(f)(4) and (5), to address this concern and clarify existing policy. We have renumbered the remaining subparagraphs in this section.

One commenter suggested the need for subcontractor input into the evaluation process. SBA believes that this idea may have some merit, but it could not be accomplished without imposing a new reporting requirement on industry, which SBA prefers not to do at this time.

The commenter that is a participant in the DoD Test Program suggested that the regulation be clarified to state that the compliance review would be for the entire company (or for the level of the company participating in the DoD Test Program), not for a particular site or location. This may be true in an individual case, but is not always true. SBA believes that it is impractical to answer this question in a broad regulation. Most, if not all, of the participants in the DoD Test Program also have contracts with civilian agencies that do not fall under that program. For those companies, SBA performance compliance reviews on the divisions and sites/locations that have contracts containing subcontracting plans, regardless of the corporate level approved for the DoD Test Program. Since the division or level of the company subject to the compliance review would vary depending on the particular plan or plans the concern is operating under, it is not possible to adopt this comment.

In response to the provision at § 125.3(f)(5), which authorizes SBA to enter into agreements with other agencies to conduct compliance reviews, two commenters questioned why SBA has entered into a memorandum of understanding (MOU) with the DCMA to assist SBA in performing compliance reviews. These commenters said that SBA ''should see how to reconfigure its work force to add more commercial marketing representatives'' rather than delegate this function to other agencies. SBA has chosen to enter into the MOU with DCMA because that agency has more than two decades of experience conducting compliance reviews and employs a strong cadre of experienced compliance specialists. Nothing is lost by giving DCMA a role in the reviews since SBA is actively involved and retains ultimate responsibility. Therefore, SBA has not adopted this suggestion.

7. Comments on Subcontracting Consideration in Source Selection

SBA received several comments on this section reflecting widely differing points of view. One commenter who supported the approach said that § 125.3(g)(1), (2) and (3) should be modified to make clear that the contracting officer must disclose to all competitors which one (or more) of the three elements will be evaluated as an important source selection evaluation factor in any subsequent procurement action. SBA agrees with this suggestion and has added it to § 125.3(g).

Another commenter suggested that the word ''may'' in this paragraph be changed to ''should,'' so that contracting officers would be required to establish an evaluation factor for subcontracting as part of the source selection criteria. SBA believes that this suggestion has merit, except that such approach cannot be made mandatory without providing specific guidance for measuring success in subcontracting, particularly when offerors on the same order or agreement operate under different types of subcontracting plans (commercial, individual or DoD Test Program). Until SBA establishes specific guidance for evaluating a business concern's goals and performance in this area, it is neither practical nor fair to impose this requirement on Federal agencies. However, SBA is working on establishing such guidance and will consider imposing mandatory evaluation factors in future revisions to its subcontracting regulations. We also note that in individual cases the evaluation factor may be simple to utilize without additional guidance, particularly in cases where all of the offerors operate under the same type of subcontracting plan. Therefore, based on the above, SBA believes that making the use of the evaluation optional until specific guidance is provided is the best course at this time.

SBA has changed the word ''important'' to ''significant'' and made other minor changes in this paragraph. The new language appears in § 125.3(g).

Another commenters said that it would be inappropriate for the Federal government to use subcontracting plans in the source selection for schedule purchases, Government-wide acquisition contracts, and multi-agency contracts because the members that the commenter represents ''are not sure how this appropriately could be accomplished.'' SBA notes that contracting officers are already required to establish an evaluation factor for subcontracting in negotiated acquisitions involving bundling (48 CFR 15.304). This is simply taking the concept one step further. SBA believes that the potential advantage of this approach to the small business community outweigh the concern expressed in this comment.

Another commenter pointed out that small businesses will be at a disadvantage because they do not have a subcontracting plan or evidence of subcontracting past performance; therefore, a small-business offeror should receive ''full/exemplary'' credit in each of the relevant categories. SBA agrees with this point and has added a similar statement to § 125.3(g).

Another commenter that is a participant in the DoD Test Program argued that this would be a problem for participant in the DoD Test Program, since they do not submit subcontracting goals for individual contracts and do not have contract-specific past performance. The DoD Test Program applies only to

contracts with the DoD. The vast majority of schedule contracts are with the General Services Administration (GSA) and the Department of Veterans Affairs. A participant in the DoD Test Program must provide civilian agencies with individual or commercial subcontracting plans and must then submit semi-annual or annual reports against these plans. SBA sees no need to revise the regulation to address this concern.

Compliance With Executive Orders 13132, 12988 and 12866, the Regulatory Flexibility Act (5 U.S.C. 601–612), and the Paperwork Reduction Act (44 U.S.C. Ch. 35)

This regulation will not have substantial direct effects on the States, on the relationship between the national government and the States, or on the distribution of power and responsibilities among the various levels of government. Therefore, for the purposes of Executive Order 13132, SBA determines that this final rule has no federalism implications warranting preparation of a federalism assessment.

The Office of Management and Budget (OMB) has determined that this rule constitutes a significant regulatory action under Executive Order 12866. the rule revises the SBA regulation governing small business contracting assistance to define good faith effort.

This action meets applicable standards set forth in section 3(a) and 3(b)(2) of Executive Order 12988, Civil Justice Reform, to minimize litigation, eliminate ambiguity, and reduce burden. The action does not have retroactive or preemptive effect.

SBA has determined that this final rule does not impose additional reporting or recordkeeping requirements under the Paperwork Reduction Act, 44 U.S.C. Chapter 35.

The Regulatory Flexibility Act (RFA), 5 U.S.C. 601, requires administrative agencies to consider the effect of their actions on small entities, small non-profit enterprises, and small local governments. Pursuant to the RFA, when an agency issues a rulemaking, the agency must prepare a regulatory flexibility analysis which describes the impact of the rule on small entities. However, section 605 of the RFA allows an agency to certify a rule, in lieu of preparing an analysis, if the rulemaking is not expected to have a significant economic impact on a substantial number of small entities. Therefore, within the meaning of RFA, SBA certifies that this rule will not have a significant economic impact on a substantial number of small entities.

The rule does not impose any new substantive responsibilities, nor does it require any new reporting or recordkeeping requirements on small business. Instead, this rule clarifies the existing statutory responsibilities under the subcontracting assistance program, including the responsibilities of prime contractors to maximize small business subcontracting opportunities. It also provides guidance to government officials in monitoring and determining the achievements of subcontracting goals.

In fiscal year 2002, the most recent year for which the Government has reliable subcontracting data, small business received nearly $34.4 billion in subcontract awards, representing more than 35 percent of all subcontracts. As a result of this regulation, subcontracting opportunities for small business should expand, and this figure may be expected to increase in the year(s) following publication of the Final Rule.

The Government does not maintain a database of small business subcontractors, but the Central Contractor Registration (CCR) maintained by the Department of Defense contains 175,209 small businesses. All of these firms are, or wish to become, prime contractors or subcontractors on Federal contracts. In most cases, a firm in the CCR is willing to perform on Federal contracts in either capacity—*i.e.,* as a prime contractor or subcontractor. Accordingly, this figure may be considered representative of the universe of small business concerns impacted by this regulation. For the record, the 175,209 includes 9,752 small disadvantaged business concerns; 8,714 HUBZone small business concerns; 40,755 women-owned small business concerns; 24,292 veteran-owned small business concerns (VOPSBs); and 4,416 service-disabled VOSBs.

From the foregoing discussion, it should be evident that the rule is primarily procedural in nature and would not have a significant economic impact on small entities. As a result, no further regulatory flexibility analysis (other than that stated above) is required under 5 U.S.C. 605(b).

List of Subjects in 13 CFR Part 125

Government contracts, Government procurement, Reporting and recordkeeping requirements, Small businesses, and Technical assistance.

■ For the reasons set forth in the preamble, SBA amends 13 CFR part 125 as follows:

PART 125—GOVERNMENT CONTRACTING PROGRAMS

■ 1. The authority citation for 13 CFR part 125 continues to read as follows:

Authority 15 U.S.C. 634(b)(6), 637 and 644; 31 U.S.C. 9701 and 9702.

■ 2. Revise § 125.3 to read as follows:

§ 125.3 Subcontracting assistance.

(a) *General.* The purpose of the subcontracting assistance program is to provide the maximum practicable subcontracting opportunities for small business concerns, including small business concerns owned and controlled by veterans, small business concerns owned and controlled by service-disabled veterans, certified HUBZone small business concerns, certified small business concerns owned and controlled by socially and economically disadvantaged individuals, and small business concerns owned and controlled by women. The subcontracting assistance program implements section 8(d) of the Small Business Act, which includes the requirement that, unless otherwise exempt, other-than-small business concerns awarded contracts that offer subcontracting possibilities by the Federal Government in excess of $500,000, or in excess of $1,000,000 for construction of a public facility, must submit a subcontracting plan to the appropriate contracting agency. The Federal Acquisition Regulation sets forth the requirements for subcontracting plans in 48 CFR 19.7, and the clause at 48 CFR 52.219–9.

(b) *Responsibilities of prime contractors.* (1) Prime contractors (including small business prime contractors) selected to receive a Federal contract that exceeds the traditional simplified acquisition threshold of $100,000, that will not be performed entirely outside of any state, territory, or possession of the United States, the District of Columbia, or the Commonwealth of Puerto Rico, and that is not for services which are personal in nature, are responsible for ensuring that small business concerns have the maximum practicable opportunity to participate in the performance of the contract, including subcontracts for subsystems, assemblies, components, and related services for major systems, consistent with the efficient performance of the contract.

(2) A small business cannot be required to submit a formal subcontracting plan or be asked to submit a formal subcontracting plan, a small-business prime contractor is encouraged to provide maximum

practicable opportunity to other small businesses to participate in the performance of the contract, consistent with the efficient performance of the contract.

(3) Efforts to provide the maximum practicable subcontracting opportunities for small business concern may include, as appropriate for the procurement, one or more of the following actions:

(i) Breaking out contract work items into economically feasible units, as appropriate, to facilitate small business participation;

(ii) Conducting market research to identify small business subcontractors and suppliers through all reasonable means, such as performing on-line searches on the Central Contractor Registration (NCR), posting Notices of Sources Sought and/or Requests for Proposal on SBA's SUB-Net, participating in Business Matchmaking events, and attending pre-bid conferences;

(iii) Soliciting small business concerns as early in the acquisition process as practicable to allow them sufficient time to submit a timely offer for the subcontract;

(iv) Providing interested small businesses with adequate and timely information about the plans, specifications, and requirements for performance of the prime contract to assist them in submitting a timely offer for the subcontract;

(v) Negotiating in good faith with interested small businesses;

(vi) Directing small businesses that need additional assistance to SBA;

(vii) Assisting interested small businesses in obtaining bonding, lines of credit, required insurance, necessary equipment, supplies, materials, or services;

(viii) Utilizing the available services of small business associations; local, state, and Federal small business assistance offices; and other organizations; and

(ix) Participating in a formal mentor-protégé program with one or more small-business protégés that results in developmental assistance to the protégés.

(c) Additional responsibilities of large prime contractors. (1) In addition to the responsibilities provided in paragraph (b) of this section, a prime contractor selected for award of a contract or contract modification that exceeds $500,000, or $1,000,000 in the case of construction of a public facility, is responsible for:

(i) Submitting and negotiating before award an acceptable subcontracting plan that reflects maximum practicable opportunities for small businesses in the performance of the contract as subcontractors or suppliers. A prime contractor may submit a commercial plan, described in paragraph (c)(2) of this section, instead of an individual subcontracting plan, when the product or service being furnished to the Government meets the definition of a commercial item under 48 CFR 2.101;

(ii) Making a good-faith effort to achieve the dollar and percentage goals and other elements in its subcontracting plan;

(iii) Submitting a timely, accurate, and complete SF–294, Subcontracting Report for Individual Contract, and SF–295, Summary Subcontract Report; or entering the same information into an electronic database approved by SBA;

(vi) Cooperating in the reviews of subcontracting plan compliance, including providing requested information and supporting documentation reflecting actual achievements and good-faith efforts to meet the goals and other elements in the subcontracting plan;

(v) Providing pre-award written notification to unsuccessful small business offerors on all subcontracts over $100,000 for which a small business concern received a preference. The written notification must include the name and location of the apparent successful offeror and if the successful offeror is a small business, veteran-owned small business, service-disabled veteran-owned small business, HUBZone small business, small disadvantaged business, or women-owned small business; and

(vi) As a best practice, providing the pre-award written notification cited in paragraph (c)(1)(v) of this section to unsuccessful and small business offerors on subcontracts at or below $100,000 whenever it is practical to do so.

(2) A commercial plan, also referred to as an annual plan or company-wide plan, is the preferred type of subcontracting plan for contractors furnishing commercial items. A commercial plan covers the offeror's fiscal year and applies to the entire production of commercial items sold by either the entire company or a portion thereof (e.g., division, plant, or product line). Once approved, the plan remains in effect during the contractor's fiscal year for all Federal government contracts in effect during that period. The contracting officer of the agency that originally approved the commercial plan will exercise the functions of the contracting officer on behalf of all agencies that award contracts covered by the plan.

(3) The additional prime contractor responsibilities described in paragraph (c)(1) of this section do not apply if:

(i) The prime contractor is a small business concern;

(ii) The prime contract or contract modification is a personal services contract; or

(iii) The prime contract or contract modification will be performed entirely outside of any state, territory, or possession of the United States, the District of Columbia, or the Commonwealth of Puerto Rico.

(d) *Determination of good-faith efforts.* Evidence that a large business prime contractor has made a good-faith effort to comply with its subcontracting plan or other subcontracting responsibilities includes supporting documentation that:

(1) The contractor performed one or more of the actions described in paragraph (b) of this section, as appropriate for the procurement;

(2) Although the contractor may have failed to achieve its goal in one socio-economic category, it over-achieved its goal by an equal or greater amount in one or more of the other categories; or

(3) The contractor fulfilled all of the requirements of its subcontracting plan.

(e) *CMR Responsibilities.* Commercial Market Representatives (CMRs) are SBA's subcontracting specialists. CMRs are responsible for:

(1) Facilitating the matching of large prime contractors with small business concerns;

(2) Counseling large prime contractors on their responsibilities to maximize subcontracting opportunities for small business concerns;

(3) Instructing large prime contractors on identifying small business concerns by means of the CCR, SUB-Net, Business Matchmaking events, and other resources and tools;

(4) Counseling small business concerns on how to market themselves to large prime contractors;

(5) Maintaining a portfolio of large prime contractors and conducting Subcontracting Orientation and Assistance Reviews (SOARs). SOARs are conducted for the purpose of assisting prime contractors in understanding and complying with their small business subcontracting responsibilities, including developing subcontracting goals that reflect maximum practicable opportunity for small business; maintaining acceptable books and records; and periodically submitting reports to the Federal government; and

(6) Conducting periodic reviews, including compliance reviews in

accordance with paragraph (f) of this section.

(f) *Compliance reviews.* A prime contractor's performance under its subcontracting plan is evaluated by means of on-site compliance reviews and follow-up reviews. A compliance review is a surveillance review that determines a contractor's achievements in meeting the goals and other elements in its subcontracting plan for both open contracts and contracts completed during the previous twelve months. A follow-up review is done after a compliance review, generally within six to eight months, to determine if the contractor has implemented SBA's recommendations.

(2) All compliance reviews begin with a validation of the contractor's most recent SF–295, Summary Subcontract Report, and SF–294, Subcontracting Report for Individual Contracts, if applicable. The validation includes a review of the contractor's methodology for completing these reports and a sampling of specific documentation to substantiate small business status.

(3) Upon completion of the review and evaluation of a contractor's performance and efforts to achieve the requirements in its subcontracting plans, the contractor's performance will be assigned one of the following ratings: Outstanding, Highly Successful, Acceptable, Marginal, or Unsatisfactory. The factors listed in paragraph (c) of this section will be taken into consideration, where applicable, in determining the contractor's rating. However, a contractor may be found Unsatisfactory, regardless of other factors, if it cannot substantiate the claimed achievements under its subcontracting plan.

(4) Any contractor that receives a marginal or unsatisfactory rating must provide a written corrective action plan to SBA, or to both SBA and the agency that conducted the compliance review if the agency conducting the review has an agreement with SBA, within 30 days of its receipt of the official compliance report.

(5) Any contractor that fails to comply with paragraph (f)(4) of this section, or any contractor that fails to demonstrate a good-faith effort, as set forth in paragraph (d) of this section, may be considered for liquidated damages under the procedures in 48 CFR 19.705–7 and the clause at 52.219–16. This action shall be considered by the contracting officer upon receipt of a written recommendation to that effect from the CMR. The CMR's recommendation must include a copy of the compliance report and any other relevant correspondence or supporting documentation.

(6) Reviews and evaluations of contractors with commercial plans are identical to reviews and evaluations of other contractors, except that contractors with commercial subcontracting plans do not submit the SF–294, Subcontracting Report for Individual Contracts. Instead, goal achievement is determined by comparing the goals in the approved commercial subcontracting plan against the cumulative achievements on the SF–295, Summary Subcontract Report, for the same period. The same ratings criteria set forth in paragraph (f)(3) of this section apply to contractors with commercial plans.

(7) SBA is authorized to enter into agreements with other Federal agencies or entities to conduct compliance reviews and otherwise further the objectives of the subcontracting program. Copies of these agreements will be published on *http://www.sba.gov/GC.* SBA is the lead agency on all joint compliance reviews with other agencies.

(g) *Subcontracting consideration in source selection.* When an ordering agency anticipates placing an order against a Federal Supply Schedule, government-wide acquisition contract (GWAC), or multi-agency contract (MAC), the ordering agency may evaluate subcontracting as a significant factor in its source selection process. In addition, the ordering agency may also evaluate subcontracting as a significant factor in source selection when entering into a blanket purchase agreement. At the time of contract award, the contracting officer must disclose to all competitors which one (or more) of these three elements will be evaluated as an important source selection evaluation factor in any subsequent procurement action. A small-business offeror automatically receives the maximum possible score or credit on this evaluation factor without having to submit a subcontracting plan and without having to demonstrate subcontracting past performance. The factors that may be evaluated, individually or in combination, are:

(1) The subcontracting to be performed on the specific requirement;

(2) The goals negotiated in previous subcontracting plans; and

(3) The contractor's past performance in meeting the subcontracting goals contained in previous subcontracting plans.

Dated: October 6, 2004.

Hector V. Barreto,

Administrator.

[FR Doc. 04–27765 Filed 12–17–04; 8:45 am]

BILLING CODE 8025–01–M

DEPARTMENT OF TRANSPORTATION

Federal Aviation Administration

14 CFR Part 39

[Docket No. 2002–NM–347–AD; Amendment 39–13908; AD 2004–25–20]

RIN 2120–AA64

Airworthiness Directives; Saab Model SAAB 2000 Series Airplanes

AGENCY: Federal Aviation Administration, DOT.

ACTION: Final rule.

SUMMARY: This amendment adopts a new airworthiness directive (AD), applicable to certain Saab Model SAAB 2000 series airplanes. This action requires various repetitive inspections for cracking of the drag and shear angles that attach the nacelle to the wing, and related corrective action. This action also requires eventual modification of the drag and shear angles, which would end the repetitive inspections. This action is necessary to prevent fatigue cracking of the drag and shear angles, which could result in reduced structural integrity of the nacelle attachment to the wing. This action is intended to address the identified unsafe condition.

DATES: Effective January 24, 2005.

The incorporation by reference of certain publications listed in the regulations is approved by the Director of the Federal Register as of January 24, 2005.

ADDRESSES: The service information referenced in this AD may be obtained from Saab Aircraft AB, SAAB Aircraft Product Support, S–581.88, Linköping, Sweden. This information may be examined at the Federal Aviation Administration (FAA), Transport Airplane Directorate, Rules Docket, 1601 Lind Avenue, SW., Renton, Washington; or at the National Archives and Records Administration (NARA). For information on the availability of this material at NARA, call (202) 741–6030, or go to: *http://www.archives.gov/federal_register/code_of_federal_regulations/ibr_locations.html.*

FOR FURTHER INFORMATION CONTACT: Dan Rodina, Aerospace Engineer, International Branch, ANM–116, FAA, Transport Airplane Directorate, 1601 Lind Avenue, SW., Renton, Washington 98055–4057; telephone (425) 227–2125; fax (425) 227–1149.

SUPPLEMENTARY INFORMATION: A proposal to amend part 39 of the Federal Aviation Regulations (14 CFR part 39) to include an airworthiness directive (AD)

that is applicable to certain Saab Model SAAB 2000 series airplanes was published in the **Federal Register** on May 19, 2004 (69 FR 28860). That action proposed to require various repetitive inspections for cracking of the drag and shear angles that attach the nacelle to the front spar of the wing, and related corrective action. That action also proposed to require eventual modification of the drag and shear angles, which would end the repetitive inspections.

Comments

Interested persons have been afforded an opportunity to participate in the making of this amendment. Due consideration has been given to the comments received.

Request To Allow Temporary Flight With Known Cracking

The commenter, the manufacturer, states that the Swedish airworthiness directives and the Saab service bulletins specify that operators may temporarily continue operating an airplane with known cracking in the drag and shear angles. The commenter notes that the proposed AD does not allow flight with any known cracking. The commenter also notes that it is aware of an FAA policy that does not allow airplanes to operate with known cracking, but that the FAA has allowed deviation from that policy under certain conditions. The commenter states that, for the proposed AD, these conditions apply:

- The repairs are complicated and time consuming and can only be performed during a major maintenance stop.
- The cracking is probably caused by secondary local bending of the flanges of the angles due to wing deflections.
- Analysis shows that the structure will maintain the capability to sustain ultimate loads for cracking.
- The maximum deferral time before repairing known cracking is 20,000 flights.
- Repair methods and terminating action have been identified and repair material is available for operators.

We infer that the commenter is requesting that the proposed AD be revised to allow temporary flight with known cracking.

We agree. While it is not our normal policy to allow flight with known cracking, based upon our review of the substantiating data submitted by the manufacturer, we have determined that we can allow temporary flight with known cracking within the limits specified in the applicable Saab service bulletins. We have determined that, if the crack size limits are strictly observed, and if repetitive inspections are performed at the required intervals, cracking that grows beyond the specified limits will be detected, and corrective action taken, before the cracking can grow to a size that would create an unacceptable risk of structural failure. Paragraph (c) of this final rule allows temporary flight with known cracking within the limits specified in the applicable Saab service bulletins.

Request To Clarify Compliance Time for Initial Inspections

The commenter requests that the compliance times specified in paragraphs (b)(2) and (b)(3) of the proposed AD be changed to include the phrases ''but not later than at 14,500 flight cycles'' and ''but not later than at 11,000 flight cycles,'' respectively. The commenter did not provide any justification for this request.

We agree with the commenter's request to add the phrases stated above to paragraphs (b)(2) and (b)(3) of this final rule. Upon review of the compliance times specified in the applicable service bulletins, we find that this information was inadvertently omitted from the compliance times stated in the proposed AD. We have determined that including this information in this final rule imposes no additional burden on any U.S.-registered airplane because none of these airplanes have accumulated the number of flight cycles that would make these provisions applicable. This change also provides harmonization between the Swedish airworthiness directives, Saab service bulletins, and this final rule.

Request To Clarify Unsafe Condition

The commenter suggests that the unsafe condition statement in the Summary and Discussion sections and the body of the proposed AD be changed to include the phrase ''attachment to the wing.'' The commenter states that it is the integrity of the attachment of the nacelle to the wing that can be reduced, not the structural integrity of the nacelle or the wing.

We agree. The unsafe condition in the Summary, Discussion, and body sections of the proposed AD states ''This action is necessary to prevent fatigue cracking of the drag and shear angles, which could result in reduced structural integrity of the nacelle and wing.'' The unsafe condition statement in the Summary and body of this final rule is ''To prevent fatigue cracking of the drag and shear angles, which could result in reduced structural integrity of the nacelle attachment to the wing.'' The Discussion section is not restated in this final rule, so no change to the final rule is necessary in this regard.

Request for Changes to Paragraph (a)

The commenter requests that, after the word ''fasteners'' in paragraph (a)(1) of the proposed AD, the words ''and in the radius of the shear angle'' be included. The commenter also requests that, after the words ''around the fasteners'' in paragraph (a)(2) of the proposed AD, the words ''as applicable'' be included. The commenter did not provide any justification for the request. We infer that the commenter requests these changes for clarification purposes.

We agree. Paragraph (a)(1) of this final rule includes the words ''and in the radii of the shear angles.'' (We have pluralized the wording since more than one angle is being inspected.) Paragraph (a)(2) of this final rule includes the words ''where applicable.''

Request To Clarify Termination of Repetitive Inspections

The commenter requests that the Summary section of the proposed AD be changed to clarify that the terminating action specified in the proposed AD would only end the repetitive inspections identified in the Saab service bulletins. The commenter states that the structural inspection program will continue to require inspections of the drag and shear angles.

We do not agree with the commenter's request to change the proposed AD to specify that only the repetitive inspections identified in the service bulletins will be terminated. Paragraph (e) of the proposed AD, which is the Terminating Action paragraph, clearly states, ''Accomplishment of these modifications ends the repetitive inspections required by paragraphs (a) and (b) of this AD.'' Furthermore, an AD is not the vehicle for terminating inspections in operators' maintenance programs. No change to the final rule is necessary in this regard.

Request To Include Reporting Information to the Manufacturer

The commenter notes that the proposed AD does not include a reporting requirement. The Saab service bulletins referenced in the proposed AD include instructions for reporting inspection information to the manufacturer. The commenter states that feedback from operators is important to ''keep a high confidence in the analysis and to be able to plan supply of repair and modification material.'' We infer that the commenter requests that the proposed AD include a reporting requirement.

We do not agree. We understand the need for manufacturers to collect useful data; however, we do not require this information. The Paperwork Reduction Act requires agencies to consider the extent of the paperwork burden that will accompany any new rule. This Act is intended to reduce these burdens by requiring agencies not only to analyze the information collection and reporting costs they are imposing on the private sector, but also to use those analyses to minimize the cost. Since we do not need the information regarding the inspection findings, we will not include a reporting requirement in this final rule. Operators may voluntarily submit inspection results to the manufacturer.

Request To Change Explanation of Relevant Service Information

The commenter requests the following changes to the Explanation of Relevant Service Information section of the proposed AD:

• Delete ''* * * and related corrective action'' in the first paragraph. This paragraph discusses the procedures included in Saab Service Bulletins 2000–54–026 and 2000–54–028, both Revision 01, both dated June 20, 2002. The commenter notes that the corrective actions are included in Saab Service Bulletins 2000–54–027 and 2000–54–029, both dated November 4, 2002.

• Change the order of the procedures in the second paragraph so the order of the procedures correlates to the order of the service bulletin references. The commenter suggests, ''Additionally, the manufacturer has issued Service Bulletins 2000–54–027 and 2000–54–029, both dated November 4, 2002, which describe procedures for modification of the shear angles and of the upper and lower drag angles.'' The commenter notes that Service Bulletin 2000–54–027 addresses modification of the shear angles and Service Bulletin 2000–54–029 addresses modification of the upper and lower drag angles.

• Delete the parenthetical reference, ''rotating probe,'' that appears in the second paragraph. The commenter states that this phrase is not applicable.

• Change the last sentence of the second paragraph to ''If any cracking is found, repair and modifications of the drag angles are detailed in the associated service bulletins. Both service bulletins describe procedures for determining the length and position of each crack and sending a report to the manufacturer.''

We agree with the commenter's suggestions. However, since the Explanation of Relevant Service Information section of the proposed AD is not restated in this final rule, no change to this final rule is necessary in this regard.

Conclusion

After careful review of the available data, including the comments noted above, the FAA has determined that air safety and the public interest require the adoption of the rule with the changes described previously. The FAA has determined that these changes will neither increase the economic burden on any operator nor increase the scope of the AD.

Cost Impact

We estimate that 3 airplanes of U.S. registry will be affected by this AD.

It will take about 6 work hours per airplane to do the inspections, at an average labor rate of $65 per work hour. Based on these figures, the cost impact of the inspections on U.S. operators is estimated to be $1,170, or $390 per airplane, per inspection cycle.

It will take about 40 work hours per airplane to do the modification of the shear angles, at an average labor rate of $65 per work hour. Required parts will cost about $6,200 per airplane. Based on these figures, the cost impact of the modification on U.S. operators is estimated to be $26,400, or $8,800 per airplane.

It will take about 400 work hours per airplane to do the modification of the drag angles, at an average labor rate of $65 per work hour. Required parts will cost about $41,794 per airplane. Based on these figures, the cost impact of the modification on U.S. operators is estimated to be $203,382, or $67,794 per airplane.

The cost impact figures discussed above are based on assumptions that no operator has yet accomplished any of the requirements of this AD action, and that no operator would accomplish those actions in the future if this AD were not adopted. The cost impact figures discussed in AD rulemaking actions represent only the time necessary to perform the specific actions actually required by the AD. These figures typically do not include incidental costs, such as the time required to gain access and close up, planning time, or time necessitated by other administrative actions.

Authority for This Rulemaking

The FAA's authority to issue rules regarding aviation safety is found in Title 49 of the United States Code. Subtitle I, section 106 describes the authority of the FAA Administrator. Subtitle VII, Aviation Programs, describes in more detail the scope of the agency's authority.

This rulemaking is promulgated under the authority described in subtitle VII, part A, subpart III, section 44701, ''General requirements.'' Under that section, the FAA is charged with promoting safe flight of civil aircraft in air commerce by prescribing regulations for practices, methods, and procedures the Administrator finds necessary for safety in air commerce. This regulation is within the scope of that authority because it addresses an unsafe condition that is likely to exist or develop on products identified in this AD.

Regulatory Impact

The regulations adopted herein will not have a substantial direct effect on the States, on the relationship between the National Government and the States, or on the distribution of power and responsibilities among the various levels of government. Therefore, it is determined that this final rule does not have federalism implications under Executive Order 13132.

For the reasons discussed above, I certify that this action (1) is not a ''significant regulatory action'' under Executive Order 12866; (2) is not a ''significant rule'' under DOT Regulatory Policies and Procedures (44 FR 11034, February 26, 1979); and (3) will not have a significant economic impact, positive or negative, on a substantial number of small entities under the criteria of the Regulatory Flexibility Act. A final evaluation has been prepared for this action and it is contained in the Rules Docket. A copy of it may be obtained from the Rules Docket at the location provided under the caption **ADDRESSES.**

List of Subjects in 14 CFR Part 39

Air transportation, Aircraft, Aviation safety, Incorporation by reference, Safety.

Adoption of the Amendment

■ Accordingly, pursuant to the authority delegated to me by the Administrator, the Federal Aviation Administration amends part 39 of the Federal Aviation Regulations (14 CFR part 39) as follows:

PART 39—AIRWORTHINESS DIRECTIVES

■ 1. The authority citation for part 39 continues to read as follows:

Authority: 49 U.S.C. 106(g), 40113, 44701.

§ 39.13 [Amended]

■ 2. Section 39.13 is amended by adding the following new airworthiness directive:

2004–25–20 Saab Aircraft AB: Amendment 39–13908. Docket 2002–NM–347–AD.

Applicability: Model SAAB 2000 series airplanes, certificated in any category, serial numbers –004 through –063 inclusive.

Compliance: Required as indicated, unless accomplished previously.

To prevent fatigue cracking of the drag and shear angles of the wing, which could result in reduced structural integrity of the nacelle attachment to the wing, accomplish the following:

Repetitive Inspections

(a) Do the inspections required by paragraphs (a)(1) and (a)(2) of this AD, at the applicable time specified in paragraph (b) of this AD.

(1) Do a detailed inspection for cracking of the shear angles which attach the nacelle to the front spar of the wing, and an eddy current inspection for cracking around the fasteners and in the radii of the shear angles, by doing all the actions per the Accomplishment Instructions of Saab Service Bulletin 2000–54–026, Revision 01, dated June 20, 2002.

(2) Do an endoscope inspection of the upper and lower drag angles for cracking, and an eddy current inspection for cracking around the fasteners where applicable, by doing all the actions per the Accomplishment Instructions of Saab Service Bulletin 2000–54–028, Revision 01, dated June 20, 2002.

Note 1: For the purposes of this AD, a detailed inspection is defined as: ''An intensive visual examination of a specific structural area, system, installation, or assembly to detect damage, failure, or irregularity. Available lighting is normally supplemented with a direct source of good lighting at intensity deemed appropriate by the inspector. Inspection aids such as mirror, magnifying lenses, etc., may be used. Surface cleaning and elaborate access procedures may be required.''

Compliance Times

(b) Do the inspections required by paragraph (a) of this AD at the applicable compliance time specified in paragraph (b)(1), (b)(2), or (b)(3) of this AD. Repeat the inspections thereafter at intervals not to exceed 4,000 flight cycles until the modification required by paragraph (e) of this AD is done.

(1) For airplanes that have accumulated 14,000 or more total flight cycles as of the effective date of this AD: Inspect within 500 flight cycles after the effective date of this AD.

(2) For airplanes that have accumulated 10,000 or more total flight cycles, but fewer than 14,000 total flight cycles as of the effective date of this AD: Inspect within 1,000 flight cycles after the effective date of this AD, but not later then 14,500 total flight cycles.

(3) For airplanes that have accumulated fewer than 10,000 total flight cycles as of the effective date of this AD: Inspect within 2,000 flight cycles after the effective date of this AD, but not later then 11,500 total flight cycles.

Corrective Action

(c) If any cracking is found during any inspection required by this AD: Except as provided by paragraph (f) of this AD, do the actions specified in and at the times specified in Table 1 of the Accomplishment Instructions of Saab Service Bulletin 2000–54–026, Revision 01, dated June 20, 2002; or Saab Service Bulletin 2000–54–028, Revision 01, dated June 20, 2002; as applicable. Where the service bulletins specify to contact the manufacturer, before further flight, repair the cracking in accordance with a method approved by either the Manager, International Branch, ANM–116, Transport Airplane Directorate, FAA; or the Luftfartsverket (or its delegated agent). Instead of repairing the cracking, doing the modifications required by paragraph (e) of this AD before further flight, terminates the repetitive inspections required by paragraphs (a) and (b) of this AD.

Inspections Done Per Previous Issues of Service Bulletins

(d) Inspections done before the effective date of this AD per Saab Service Bulletins 2000–54–026 and 2000–54–028, both dated April 26, 2002, are considered acceptable for compliance with the corresponding actions specified in this AD.

Terminating Action

(e) Except as provided by paragraph (c) of this AD: Do the modifications of the drag and shear angles of the wing at the times specified in paragraphs (e)(1) and (e)(2) of this AD. Accomplishment of these modifications ends the repetitive inspections required by paragraphs (a) and (b) of this AD.

(1) Before the accumulation of 20,000 total flight cycles: Modify the shear angles that attach the nacelle to the front spar of the wing by doing all the actions per the Accomplishment Instructions of Saab Service Bulletin 2000–54–027, dated November 4, 2002.

(2) Before the accumulation of 24,000 total flight cycles: Modify the upper and lower drag angles by doing all the actions per the Accomplishment Instructions of Saab Service Bulletin 2000–54–029, dated November 4, 2002.

No Reporting Requirement

(f) Although the Saab service bulletins referenced in this AD recommend submitting certain information to the manufacturer, this AD does not include such a requirement.

Alternative Methods of Compliance

(g) In accordance with 14 CFR 39.19, the Manager, International Branch, ANM–116, is authorized to approve alternative methods of compliance for this AD.

Incorporation by Reference

(h) Unless otherwise specified in this AD, the actions shall be done in accordance with the service bulletins listed in Table 1 of this AD.

TABLE 1.—SERVICE BULLETINS INCORPORATED BY REFERENCE

Saab service bulletin—	Revision level—	Date—
2000–54–026	01	June 20, 2002.
2000–54–027	Original	November 4, 2002.
2000–54–028	01	June 20, 2002.
2000–54–029	Original	November 4, 2002.

This incorporation by reference was approved by the Director of the Federal Register in accordance with 5 U.S.C. 552(a) and 1 CFR part 51. Copies may be obtained from Saab Aircraft AB, SAAB Aircraft Product Support, S–581.88, Linköping, Sweden. Copies may be inspected at the FAA, Transport Airplane Directorate, 1601 Lind Avenue, SW., Renton, Washington; or at the National Archives and Records Administration (NARA). For information on the availability of this material at NARA, call (202) 741–6030, or go to: *http://www.archives.gov/federal_register/code_of_federal_regulations/ibr_locations.html.*

Note 2: The subject of this AD is addressed in Swedish airworthiness directives 1–174 and 1–175, both effective April 30, 2002; and Swedish airworthiness directives 1–1180 and 1–181, both effective November 8, 2002.

Effective Date

(i) This amendment becomes effective on January 24, 2005.

Issued in Renton, Washington, on December 6, 2004.

Ali Bahrami,

Manager, Transport Airplane Directorate, Aircraft Certification Service.

[FR Doc. 04–27506 Filed 12–17–04; 8:45 am]

BILLING CODE 4910–13–P

DEPARTMENT OF TRANSPORTATION

Federal Aviation Administration

14 CFR Part 39

[Docket No. FAA–2004–19862; Directorate Identifier 2004–NM–228–AD; Amendment 39–13907; AD 2004–25–19]

RIN 2120–AA64

Airworthiness Directives; Bombardier Model CL–600–1A11 (CL–600), CL–600–2A12 (CL–601), CL–600–2B16 (CL–601–3A, CL–601–3R, and CL–604) Series Airplanes

AGENCY: Federal Aviation Administration (FAA), DOT.

ACTION: Final rule; request for comments.

SUMMARY: The FAA is adopting a new airworthiness directive (AD) for certain Bombardier Model CL–600–1A11 (CL–600), CL–600–2A12 (CL–601), CL–600–2B16 (CL–601–3A, CL–601–3R, and CL–604) series airplanes. This AD requires revising the airplane flight manual to provide the flightcrew with procedures and limitations for operating an airplane with out-of-tolerance angle of attack (AOA) transducers. This AD also requires repetitive linearity tests of the AOA transducers, and corrective action if necessary. This AD is prompted by a report of premature wear of the potentiometers in AOA transducers having a certain part number. We are issuing this AD to prevent a delay in the stall computer commands for stall warning, stick shaker, and stick pusher operation, due to premature wear of the potentiometers of the AOA transducers, which may cause the airplane to enter a stall condition, and result in loss of control of the airplane.

DATES: Effective January 4, 2005.

The incorporation by reference of certain publications listed in the AD is approved by the Director of the Federal Register as of January 4, 2005.

We must receive comments on this AD by February 18, 2005.

ADDRESSES: Use one of the following addresses to submit comments on this AD.

- *DOT Docket Web site:* Go to *http://dms.dot.gov* and follow the instructions for sending your comments electronically.
- *Government-wide rulemaking Web site:* Go to *http://www.regulations.gov* and follow the instructions for sending your comments electronically.
- *Mail:* Docket Management Facility; U.S. Department of Transportation, 400 Seventh Street, SW., Nassif Building, Room PL–401, Washington, DC 20590.
- *Fax:* (202) 493–2251.
- *Hand Delivery:* Room PL–401 on the plaza level of the Nassif Building, 400 Seventh Street, SW., Washington, DC, between 9 a.m. and 5 p.m., Monday through Friday, except Federal holidays.

For service information identified in this AD, contact Bombardier, Inc., Canadair, Aerospace Group, P.O. Box 6087, Station Centre-ville, Montreal, Quebec H3C 3G9, Canada. You can examine this information at the National Archives and Records Administration (NARA). For information on the availability of this material at NARA, call (202) 741–6030, or go to: *http://www.archives.gov/federal_register/code_of_federal_regulations/ibr_locations.html.*

You can examine the contents of this AD docket on the Internet at *http://dms.dot.gov,* or in person at the Docket Management Facility, U.S. Department of Transportation, 400 Seventh Street SW., Room PL–401, on the plaza level of the Nassif Building, Washington, DC. This docket number is FAA–2004–19862; the directorate identifier for this docket is 2004–NM–228–AD.

Docket Management System (DMS)

The FAA has implemented new procedures for maintaining AD dockets electronically. As of May 17, 2004, new AD actions are posted on DMS and assigned a docket number. We track each action and assign a corresponding directorate identifier. The DMS AD docket number is in the form ''Docket No. FAA–2004–99999.'' The Transport Airplane Directorate identifier is in the form ''Directorate Identifier 2004–NM–999–AD.'' Each DMS AD docket also lists the directorate identifier (''Old Docket Number'') as a cross-reference for searching purposes.

Examining the Docket

You can examine the AD docket on the Internet at *http://dms.dot.gov,* or in person at the Docket Management Facility office between 9 a.m. and 5 p.m., Monday through Friday, except Federal holidays. The Docket Management Facility office (telephone (800) 647–5227) is located on the plaza level of the Nassif Building at the DOT street address stated in the **ADDRESSES** section. Comments will be available in the AD docket shortly after the DMS receives them.

FOR FURTHER INFORMATION CONTACT: *Technical information:* Wing Chan, Aerospace Engineer, Systems and Flight Test Branch, ANE–172, FAA, New York Aircraft Certification Office, 1600 Stewart Avenue, suite 410, Westbury, New York 11590; telephone (516) 228–7311; fax (516) 794–5531.

Plain language information: Marcia Walters, *marcia.walters@faa.gov.*

SUPPLEMENTARY INFORMATION: Transport Canada Civil Aviation (TCCA), which is the airworthiness authority for Canada, notified the FAA that an unsafe condition may exist on certain Bombardier Model CL–600–1A11 (CL–600), CL–600–2A12 (CL–601), CL–600–2B16 (CL–601–3A, CL–601–3R, and CL–604) series airplanes. TCCA advises that angle of attack (AOA) transducers having a certain part number may have potentiometers that wear prematurely. The problem is dormant and can only be identified on in-service airplanes by a linearity test of each AOA transducer. Prematurely worn potentiometers in the AOA transducers, if not corrected, could result in a delay in the stall computer commands for stall warning, stick shaker, and stick pusher operation, which may cause the airplane to enter a stall condition, and result in loss of control of the airplane.

Relevant Service Information

Bombardier has issued the following temporary revisions (TR) to the applicable Canadair Challenger airplane flight manual (AFM).

BOMBARDIER TEMPORARY REVISIONS

Model	Temporary revision	Product support publication	Dated
CL–600–1A11 (CL–600) series airplanes	600/20–2	600 (not stated in document)	October 15, 2004
	600–1/15–2	600–1 (not stated in document)	October 15, 2004
CL–600–2A12 (CL–601) series airplanes	601/12–2	601–1B–1	October 15, 2004
	601/13–2	601–1A–1	October 15, 2004
	601/17–2	601–1B	October 15, 2004
	601/25–2	601–1A–18 (not stated in document).	October 15, 2004

BOMBARDIER TEMPORARY REVISIONS—Continued

Model	Temporary revision	Product support publication	Dated
CL–600–2B16 (CL–601–3A and –3R) series airplanes.	601/22–2	601A–1–1	October 15, 2004
	601/23–2	601A–1	October 15, 2004
CL–600–2B16 (CL–604) series airplanes	604/9–6	604–1	October 15, 2004

Among other things, the TRs describe procedures for revising the Limitations, Performance, and Normal Procedures Sections of the applicable Canadair Challenger AFM, to provide the flightcrew with procedures and limitations for operating an airplane with any out-of-tolerance AOA transducer.

Bombardier has also issued the following alert service bulletins:

ALERT SERVICE BULLETINS

For model—	Bombardier alert service bulletin	Dated
CL–600–1A11 (CL–600) series airplanes	A600–0729	October 14, 2004
CL–600–2A12 (CL–601) series airplanes and CL–600–2B16 (CL–601–3A and –3R) series airplanes	A601–0571	October 14, 2004
CL–600–2B16 (CL–604) series airplanes	A604–27–026	October 14, 2004

The alert service bulletins describe procedures for doing repetitive linearity checks (tests) for each AOA transducer, and corrective action if necessary. The corrective action includes replacing any AOA transducer that does not meet the specified linearity requirements with a serviceable AOA transducer.

TCCA mandated the temporary revisions and alert service bulletins and issued Canadian airworthiness directive CF–2004–22, dated October 22, 2004, to ensure the continued airworthiness of these airplanes in Canada.

FAA's Determination and Requirements of This AD

These airplane models are manufactured in Canada and are type certificated for operation in the United States under the provisions of section 21.29 of the Federal Aviation Regulations (14 CFR 21.29) and the applicable bilateral airworthiness agreement. According to this bilateral airworthiness agreement, TCCA has kept us informed of the situation described above. We have examined the TCCA's findings, evaluated all pertinent information, and determined that we need to issue an AD for products of this type design that are certificated for operation in the United States.

Therefore, we are issuing this AD to require revising the airplane flight manual to provide the flightcrew with procedures and limitations for operating an airplane with out-of-tolerance AOA transducers. This AD also requires repetitive linearity tests of the AOA transducers, and corrective action if necessary. This AD requires accomplishing the actions specified in the service information described previously, except as described in ''Differences Between This AD and Referenced Alert Service Bulletins.''

Difference Between Proposed AD and Referenced Alert Service Bulletins

Operators should note that, although the Accomplishment Instructions of the referenced alert service bulletins describe procedures for submitting service bulletin incorporation notices to the manufacturer, this AD does not require those actions.

Clarification of Terminology

In this AD, the linearity ''checks'' of the AOA transducers specified in the Canadian airworthiness directive and the Bombardier alert service bulletins are referred to as ''tests.''

Interim Action

This is considered to be interim action until final action is identified, at which time we may consider further rulemaking.

FAA's Determination of the Effective Date

An unsafe condition exists that requires the immediate adoption of this AD; therefore, providing notice and opportunity for public comment before the AD is issued is impracticable, and good cause exists to make this AD effective in less than 30 days.

Comments Invited

This AD is a final rule that involves requirements that affect flight safety and was not preceded by notice and an opportunity for public comment; however, we invite you to submit any relevant written data, views, or arguments regarding this AD. Send your comments to an address listed under **ADDRESSES.** Include ''Docket No. FAA–2004–19862; Directorate Identifier 2004–NM–228–AD'' at the beginning of your comments. We specifically invite comments on the overall regulatory, economic, environmental, and energy aspects of the AD. We will consider all comments received by the closing date and may amend the AD in light of those comments.

We will post all comments we receive, without change, to *http://dms.dot.gov,* including any personal information you provide. We will also post a report summarizing each substantive verbal contact with FAA personnel concerning this AD. Using the search function of our docket Web site, anyone can find and read the comments in any of our dockets, including the name of the individual who sent the comment (or signed the comment on behalf of an association, business, labor union, etc.). You can review the DOT's complete Privacy Act Statement in the **Federal Register** published on April 11, 2000 (65 FR 19477–78), or you can visit *http://dms.dot.gov.*

We are reviewing the writing style we currently use in regulatory documents. We are interested in your comments on whether the style of this document is clear, and your suggestions to improve the clarity of our communications with you. You can get more information about plain language at *http://www/faa.gov/language* and *http://www.plainlanguage.gov.*

Regulatory Findings

We have determined that this AD will not have federalism implications under Executive Order 13132. This AD will not have a substantial direct effect on the States, on the relationship between the National Government and the States, or on the distribution of power and responsibilities among the various levels of government.

For the reasons discussed above, I certify that the regulation:

1. Is not a ''significant regulatory action'' under Executive Order 12866;
2. Is not a ''significant rule'' under the DOT Regulatory Policies and Procedures (44 FR 11034, February 26, 1979); and
3. Will not have a significant economic impact, positive or negative, on a substantial number of small entities under the criteria of the Regulatory Flexibility Act.

We prepared a regulatory evaluation of the estimated costs to comply with this AD. See the **ADDRESSES** section for a location to examine the regulatory evaluation.

List of Subjects in 14 CFR Part 39

Air transportation, Aircraft, Aviation safety, Incorporation by reference, Safety.

Adoption of the Amendment

■ Accordingly, under the authority delegated to me by the Administrator, the FAA amends 14 CFR part 39 as follows:

PART 39—AIRWORTHINESS DIRECTIVES

■ 1. The authority citation for part 39 continues to read as follows:

Authority: 49 U.S.C. 106(g), 40113, 44701.

§ 39.13 [Amended]

■ 2. The FAA amends § 39.13 by adding the following new airworthiness directive (AD):

2004–25–19 Bombardier, Inc., (Formerly Canadair): Amendment 39–13907. Docket No. FAA–2004–19862; Directorate Identifier 2004–NM–228–AD.

Effective Date

(a) This AD becomes effective January 4, 2005.

Affected ADs

(b) None.

Applicability

(c) This AD applies to the Bombardier airplanes, certificated in any category, that are listed in Table 1 of this AD.

TABLE 1.—APPLICABILITY

Bombardier model	Having serial numbers	Which have an angle of attack transducer (AOA) with the following part number
CL–600–1A11 (CL–600) series airplanes	1004 through 1085 inclusive	600–59154–5
CL–600–2A12 (CL–601) series airplanes	3001 through 3066 inclusive	600–59154–5
CL–600–2B16 (CL–601–3A and CL–601–3R) series airplanes	5001 through 5194 inclusive	600–59154–5
CL–600–2B16 (CL–604) series airplanes	5301 and subsequent	600–59154–5

Unsafe Condition

(d) This AD was prompted by a report of premature wear of the potentiometers in AOA transducers having a certain part number. The FAA is issuing this AD to prevent a delay in the stall computer commands for stall warning, stick shaker, and stick pusher operation, due to premature wear of the potentiometers of the AOA transducers, which may cause the airplane to enter a stall condition, and result in loss of control of the airplane.

Compliance

(e) You are responsible for having the actions required by this AD performed within the compliance times specified, unless the actions have already been done.

Airplane Flight Manual (AFM) Revisions

(f) Within 7 days after the effective date of this AD: Revise the Limitations, Performance, and Normal Procedures Sections of the applicable Canadair Challenger AFM by inserting the applicable Bombardier temporary revision (TR), as listed in Table 2 of this AD. Some TRs listed in Table 2 of this AD contain Product Support Publication (PSP) identifiers.

TABLE 2.—BOMBARDIER TEMPORARY REVISIONS

Model	Temporary revision	PSP	Dated
CL–600–1A11 (CL–600) series airplanes	600/20–2	600 (not stated in document)	October 15, 2004.
	600–1/15–2	600–1 (not stated in document)	October 15, 2004.
CL–600–2A12 (CL–601) series airplanes	601/12–2	601–1B–1	October 15, 2004.
	601/13–2	601–1A–1	October 15, 2004.
	601/17–2	601–1B	October 15, 2004.
	601/25–2	601–1A–18 (not stated in document).	October 15, 2004.
CL–600–2B16 (CL–601–3A and –3R) series airplanes.	601/22–2	601A–1–1	October 15, 2004.
	601/23–2	601A–1	October 15, 2004.
CL–600–2B16 (CL–604) series airplanes	604/9–6	604–1	October 15, 2004.

Repetitive Tests

(g) Prior to the accumulation of 100 total flight hours on any AOA transducer, part number (P/N) 600–59154–5, since new, or within 50 flight hours after the effective date of this AD, whichever is later: Perform a linearity test of each AOA transducer by accomplishing all of the applicable actions specified in the Accomplishment Instructions of the applicable Bombardier alert service bulletin listed in Table 3 of this AD. Repeat the linearity test of each AOA transducer thereafter at intervals not to exceed 100 flight hours. Although the alert service bulletins specify to submit certain information to the manufacturer, this AD does not include such a requirement.

TABLE 3.—BOMBARDIER ALERT SERVICE BULLETINS

For model—	Bombardier alert service bulletin	Dated	Excluding
CL–600–1A11 (CL–600) series airplanes	A600–0729	October 14, 2004	Appendix A
CL–600–2A12 (CL–601) series airplanes and CL–600–2B16 (CL–601–3A and –3R) series airplanes.	A601–0571	October 14, 2004	Appendix A
CL–600–2B16 (CL–604) series airplanes	A604–27–026	October 14, 2004	Appendix A

Corrective Action

(h) For any AOA transducer, P/N 600–59154–5, that does not pass any linearity test as required by paragraph (g) of this AD: Before further flight, replace the affected AOA transducer with a serviceable transducer by accomplishing the applicable actions specified in the Accomplishment Instructions of the applicable Bombardier alert service bulletin listed in Table 3 of this AD.

Alternative Methods of Compliance (AMOCs)

(i) The Manager, New York Aircraft Certification Office (ACO), FAA, has the authority to approve AMOCs for this AD, if requested in accordance with the procedures found in 14 CFR 39.19.

Related Information

(j) Canadian airworthiness directive CF–2004–22, dated October 22, 2004, also addresses the subject of this AD.

Material Incorporated by Reference

(k) You must use the Bombardier alert service bulletins and temporary revisions to the applicable Canadair Challenger airplane flight manuals specified in Table 4 of this AD, to perform the actions that are required by this AD, unless the AD specifies otherwise. The Director of the Federal Register approves the incorporation by reference of those documents in accordance with 5 U.S.C. 552(a) and 1 CFR part 51. For copies of the service information, contact Bombardier, Inc., Canadair, Aerospace Group, P.O. Box 6087, Station Centre-ville, Montreal, Quebec H3C 3G9, Canada. You can review copies at the Docket Management Facility, U.S. Department of Transportation, 400 Seventh Street SW., Room PL–401, Nassif Building, Washington, DC; or at the National Archives and Records Administration (NARA). For information on the availability of this material at NARA, call (202) 741–6030, or go to *http://www.archives.gov/federal_register/code_of_federal_regulations/ibr_locations.html.*

TABLE 4.—MATERIAL INCORPORATED BY REFERENCE

Bombardier document	PSP	Document date
Alert Service Bulletin A600–0729, excluding Appendix A	None	October 14, 2004
Alert Service Bulletin A601–0571, excluding Appendix A	None	October 14, 2004
Alert Service Bulletin A604–27–026, excluding Appendix A	None	October 14, 2004
Temporary Revision 600/20–2	600 (not stated in document)	October 15, 2004
Temporary Revision 600–1/15–2	600–1 (not stated in document)	October 15, 2004
Temporary Revision 601/12–2	601–1B–1	October 15, 2004
Temporary Revision 601/13–2	601–1A–1	October 15, 2004
Temporary Revision 601/17–2	601–1B	October 15, 2004
Temporary Revision 601/22–2	601A–1–1	October 15, 2004
Temporary Revision 601/23–2	601A–1	October 15, 2004
Temporary Revision 601/25–2	601–1A–18 (not stated in document)	October 15, 2004
Temporary Revision 604/9–6	604–1	October 15, 2004

Issued in Renton, Washington, on December 6, 2004.

Ali Bahrami,

Manager, Transport Airplane Directorate, Aircraft Certification Service.

[FR Doc. 04–27507 Filed 12–17–04; 8:45 am]

BILLING CODE 4910–13–P

DEPARTMENT OF TRANSPORTATION

Federal Aviation Administration

14 CFR Part 39

[Docket No. FAA–2004–19896; Directorate Identifier 2004–CE–44–AD; Amendment 39–13913; AD 2004–25–51]

RIN 2120–AA64

Airworthiness Directives; Raytheon Aircraft Company Beech Models 45 (YT–34), A45 (T–34A, B–45), and D45 (T–34B) Airplanes

AGENCY: Federal Aviation Administration (FAA), DOT.

ACTION: Final rule; request for comments.

SUMMARY: The FAA is adopting a new airworthiness directive (AD) for all Raytheon Aircraft Company (Raytheon) Beech Models 45 (YT–34), A45 (T–34A, B–45), and D45 (T–34B) airplanes. This AD requires you to perform an inspection and/or modification program approved specifically for this AD by the FAA Wichita Aircraft Certification Office (ACO). This AD is the result of a total of three accidents on the affected airplanes, including a recent accident where the wing separated from the airplane in flight. We are issuing this AD to detect and correct cracking in the wing structure of the affected airplanes, which could result in the wing separating from the airplane with consequent loss of control of the airplane.

DATES: This AD becomes effective on December 21, 2004, to all affected persons who did not receive emergency AD 2004–25–51, issued December 10, 2004. Emergency AD 2004–25–51 contained the requirements of this amendment and became effective immediately upon receipt.

We must receive any comments on this AD by January 31, 2005.

ADDRESSES: Use one of the following to submit comments on this AD:

- *DOT Docket Web site:* Go to *http://dms.dot.gov* and follow the instructions for sending your comments electronically.
- *Government-wide rulemaking Web site:* Go to *http://www.regulations.gov* and follow the instructions for sending your comments electronically.
- *Mail:* Docket Management Facility; U.S. Department of Transportation, 400 Seventh Street, SW., Nassif Building, Room PL–401, Washington, DC 20590–0001.
- *Fax:* 1–202–493–2251.
- *Hand Delivery:* Room PL–401 on the plaza level of the Nassif Building, 400 Seventh Street, SW., Washington, DC, between 9 a.m. and 5 p.m., Monday through Friday, except Federal holidays.

To view the comments to this AD, go to *http://dms.dot.gov.* The docket number is FAA–2004–19896.

FOR FURTHER INFORMATION CONTACT: Paul Nguyen, Aerospace Engineer, FAA, Wichita Aircraft Certification Office, 1801 Airport Road, Mid-Continent Airport, Wichita, Kansas 67209; telephone: (316) 946–4125; facsimile: (316) 946–4107; e-mail: *paul.nguyen@faa.gov.*

SUPPLEMENTARY INFORMATION:

What events have caused this AD? On December 7, 2004, the left wing of a Raytheon Beech Model A45 (T–34A), serial number G–13, separated from the airplane in flight. The airplane, operated by Texas Air Aces, crashed near Montgomery, Texas. The wing was found about a quarter mile away from the crash site.

The left wing center section failed 4 inches inboard of the forward wing attach fitting. In addition, FAA investigation revealed further visual evidence of fatigue (found in other wing locations) not previously addressed by AD 2001–13–18 R1, which FAA issued as a result of an accident near Conroe, Texas.

A review of maintenance records shows that the accident airplane was in compliance with AD 2001–13–18 R1.

AD 2001–13–18 R1 requires compliance with Raytheon Service Bulletin SB57–3329 to inspect four locations per wing:

- Location (1)—9 fasteners at Wing Station (W.S.) 34 forward spar;
- Location (2)—the lower rear bathtub fitting;
- Location (3)—1 fastener at W.S. 64 forward spar; and
- Location (4)—2 fasteners at W.S. 66 rear spar.

The FAA approved four alternative methods of compliance (AMOCs) to AD 2001–13–18 R1 based on front spar replacement or modification and inspections of Location (2) and (4) of the rear spar.

On January 27, 2003, FAA issued emergency AD 2004–25–51 to require you to perform an inspection and/or modification program approved specifically for this AD by the FAA Wichita Aircraft Certification Office (ACO).

Why is it important to publish this AD? The FAA found that immediate corrective action was required, that notice and opportunity for prior public comment were impracticable and contrary to the public interest, and that good cause existed to make the AD effective immediately by individual letters issued on December 10, 2004, to all known U.S. operators of Raytheon Beech Models 45 (YT–34), A45 (T–34A, B–45), and D45 (T–34B) airplanes. These conditions still exist, and the AD is published in the **Federal Register** as an amendment to section 39.13 of the Federal Aviation Regulations (14 CFR 39.13) to make it effective to all persons.

Comments Invited

Will I have the opportunity to comment before you issue the rule? This AD is a final rule that involves requirements affecting flight safety and was not preceded by notice and an opportunity for public comment; however, we invite you to submit any written relevant data, views, or arguments regarding this AD. Send your comments to an address listed under **ADDRESSES.** Include ''Docket No. FAA–2004–19896; Directorate Identifier 2004–CE–44–AD'' in the subject line of your comments. If you want us to acknowledge receipt of your mailed comments, send us a self-addressed, stamped postcard with the docket number written on it; we will date-stamp your postcard and mail it back to you. We specifically invite comments on the overall regulatory, economic, environmental, and energy aspects of the rule that might suggest a need to modify it. If a person contacts us through a nonwritten communication, and that contact relates to a substantive part of this AD, we will summarize the contact and place the summary in the docket. We will consider all comments received by the closing date and may amend the AD in light of those comments.

Authority For This Rulemaking

What authority does FAA have for issuing this rulemaking action? Title 49 of the United States Code specifies the FAA's authority to issue rules on aviation safety. Subtitle I, Section 106 describes the authority of the FAA Administrator. Subtitle VII, Aviation Programs, describes in more detail the scope of the agency's authority.

We are issuing this rulemaking under the authority described in Subtitle VII, Part A, Subpart III, Section 44701, ''General requirements.'' Under that section, Congress charges the FAA with promoting safe flight of civil aircraft in air commerce by prescribing regulations for practices, methods, and procedures the Administrator finds necessary for safety in air commerce. This regulation is within the scope of that authority because it addresses an unsafe condition that is likely to exist or develop on products identified in this AD.

Regulatory Findings

Will this AD impact various entities? We have determined that this AD will not have federalism implications under Executive Order 13132. This AD will not have a substantial direct effect on the States, on the relationship between the national government and the States, or on the distribution of power and responsibilities among the various levels of government.

Will this AD involve a significant rule or regulatory action? For the reasons discussed above, I certify that this AD:

1. Is not a ''significant regulatory action'' under Executive Order 12866;
2. Is not a ''significant rule'' under the DOT Regulatory Policies and Procedures (44 FR 11034, February 26, 1979); and
3. Will not have a significant economic impact, positive or negative, on a substantial number of small entities under the criteria of the Regulatory Flexibility Act.

We prepared a summary of the costs to comply with this AD and placed it in the AD Docket. You may get a copy of this summary by sending a request to us at the address listed under **ADDRESSES.** Include ''Docket No. FAA–2004–19896; Directorate Identifier 2004–CE–44–AD'' in your request.

List of Subjects in 14 CFR Part 39

Air transportation, Aircraft, Aviation safety, Safety.

Adoption of the Amendment

■ Accordingly, under the authority delegated to me by the Administrator, the Federal Aviation Administration amends part 39 of the Federal Aviation Regulations (14 CFR part 39) as follows:

PART 39—AIRWORTHINESS DIRECTIVES

■ 1. The authority citation for part 39 continues to read as follows:

Authority: 49 U.S.C. 106(g), 40113, 44701.

§ 39.13 [Amended]

■ 2. The FAA amends § 39.13 by adding the following new airworthiness directive (AD):

2004–25–51 Raytheon Aircraft Company: Amendment 39–13913; Docket No. FAA–2004–19896; Directorate Identifier 2004–CE–44–AD.

When Does This AD Become Effective?

(a) This AD becomes effective on December 21, 2004, to all affected persons who did not receive emergency AD 2004–25–51, issued December 10, 2004. Emergency AD 2004–25–51 contained the requirements of this amendment and became effective immediately upon receipt.

Are Any Other ADs Affected By This Action?

(b) None. For clarification, this AD provides no relief from the requirements of AD 2001–13–18 R1.

What Airplanes Are Affected by This AD?

(c) This AD affects Beech Models 45 (YT–34), A45 (T–34A, B–45), and D45 (T–34B) airplanes, all serial numbers, that are certificated in any category.

What Is the Unsafe Condition Presented in This AD?

(d) This AD is the result of cracks found in a location that was previously inspected and found to comply with AD 2001–13–18 R1; and two new locations. We are issuing this AD to detect and correct such cracking, which could result in the wing separating from the airplane with consequent loss of control of the airplane.

What Must I Do To Address This Problem?

(e) The following specifies actions you must do per this AD and other pertinent information to address this problem:

Actions	Compliance
(1) Perform an inspection and/or modification program approved specifically for this AD by the FAA Wichita Aircraft Certification Office (ACO).	Prior to further flight after December 21, 2004 (the effective date of this AD), except that this action was already required prior to further flight upon receipt for those who received emergency AD 2004–25–51.
(2) To return/position the airplane to a home base, hangar, maintenance facility, etc., you may operate the airplane provided you follow the limitations in paragraph (f) of this AD.	You may operate the airplane up to 10 hours time-in-service (TIS) provided the flight(s) occur(s) no later than 30 days after December 21, 2004, except that this provision was already given to those who received emergency AD 2004–25–51. This is a one-time provision.
(3) Special flight permits are allowed for this AD. See paragraph (f) of this AD for restrictions.	Use the procedures in 14 CFR part 39 and the restrictions in paragraph (f) of this AD.
(4) To help in the long-term airworthiness solution for the safety and continued airworthiness of these airplanes, FAA is requesting data from every owner/operator on the following on these airplanes: (i) Service/Repair History (cracked/fatigued structure); (ii) Maintenance Schedule; and (iii) Total Hours Time-In-Service (TIS).	Send to Paul Nguyen, Aerospace Engineer, FAA, Wichita Aircraft Certification Office, 1801 Airport Road, Mid-Continent Airport, Wichita, Kansas 67209; telephone: (316) 946–4125; facsimile: (316) 946–4107; e-mail: *paul.nguyen@faa.gov.*

What Are the Flight Restrictions Specified in Paragraph (e)(2) and (e)(3) of This AD?

(f) During the time allowed before compliance with paragraph (e)(1) of this AD or for any approved special flight permit, you must adhere to the following limitations:

(1) NEVER EXCEED SPEED, VNE–175 MPH (152 knots).

(2) NORMAL ACCELERATION (G) LIMITS −0, and +2.5.

(3) ACROBATIC MANEUVERS PROHIBITED.

(4) FLIGHT INTO KNOWN OR FORECAST MODERATE OR SEVERE TURBULENCE IS PROHIBITED.

(5) DAY VISUAL FLIGHT RULES (VFR) OPERATION ONLY.

(6) PILOT AND ANY ADDITIONAL FLIGHT CREW MEMBER REQUIRED FOR SAFE OPERATION.

Who Do I Contact for Further Information?

(g) If you need additional information relating to this AD, contact: Paul Nguyen, Aerospace Engineer, FAA, Wichita Aircraft Certification Office, 1801 Airport Road, Mid-Continent Airport, Wichita, Kansas 67209; telephone: (316) 946–4125; facsimile: (316) 946–4107; e-mail: *paul.nguyen@faa.gov.*

Issued in Kansas City, Missouri, on December 14, 2004.

James E. Jackson,

Acting Manager, Small Airplane Directorate, Aircraft Certification Service.

[FR Doc. 04–27708 Filed 12–17–04; 8:45 am]

BILLING CODE 4910–13–P

DEPARTMENT OF TRANSPORTATION

Federal Aviation Administration

14 CFR Part 121

Operating Requirements: Domestic, Flag, and Supplemental Operations

CFR Correction

In Title 14 of the Code of Federal Regulations, parts 60 to 139, revised as of January 1, 2004, on page 474, § 121.385 is corrected by adding paragraph (d) to read as follows:

§ 121.385 Composition of flight crew.

* * * * *

(d) On each flight requiring a flight engineer at least one flight crewmember, other than the flight engineer, must be qualified to provide emergency performance of the flight engineer's functions for the safe completion of the flight if the flight engineer becomes ill or is otherwise incapacitated. A pilot need not hold a flight engineer's certificate to perform the flight engineer's functions in such a situation.

[FR Doc. 04–55529 Filed 12–17–04; 8:45 am]

BILLING CODE 1505–01–D

DEPARTMENT OF THE INTERIOR

Office of Surface Mining Reclamation and Enforcement

30 CFR Part 917

[KY–247–FOR]

Kentucky Regulatory Program

AGENCY: Office of Surface Mining Reclamation and Enforcement (OSM), Interior.

ACTION: Final rule; approval of amendment.

SUMMARY: We are approving an amendment to the Kentucky regulatory program (the ''Kentucky program'') under the Surface Mining Control and Reclamation Act of 1977 (SMCRA or the Act). Kentucky proposes to revise its statutes regarding easements of necessity and submitted the amendment at its own initiative.

EFFECTIVE DATE: December 20, 2004.

FOR FURTHER INFORMATION CONTACT: William J. Kovacic, Telephone: (859) 260–8400. Telefax number: (859) 260–8410.

SUPPLEMENTARY INFORMATION:

I. Background on the Kentucky Program
II. Submission of the Proposed Amendment
III. OSM's Findings
IV. Summary and Disposition of Comments
V. OSM's Decision

VI. Procedural Determinations

I. Background on the Kentucky Program

Section 503(a) of the Act permits a State to assume primacy for the regulation of surface coal mining and reclamation operations on non-Federal and non-Indian lands within its borders by demonstrating that its State program includes, among other things, ''a State law which provides for the regulation of surface coal mining and reclamation operations in accordance with the requirements of the Act * * * and rules and regulations consistent with regulations issued by the Secretary pursuant to the Act.'' *See* 30 U.S.C. 1253(a)(1) and (7). On the basis of these criteria, the Secretary of the Interior conditionally approved the Kentucky program on May 18, 1982. You can find background information on the Kentucky program, including the Secretary's findings, the disposition of comments, and conditions of approval in the May 18, 1982, **Federal Register** (47 FR 21434). You can also find later actions concerning Kentucky's program and program amendments at 30 CFR 917.11, 917.12, 917.13, 917.15, 917.16 and 917.17.

II. Submission of the Proposed Amendment

By letter dated May 14, 2004, Kentucky sent us an amendment to its program (KY–247–FOR, Administrative Record No. KY–1624). Kentucky submitted House Bill (HB) 537 promulgated by the 2004 Kentucky General Assembly. It amends the Kentucky Revised Statutes (KRS) at 350.280 pertaining to easements of necessity. Easements are proposed when a notice or cessation order directs abatement of a violation and the permittee or operator does not have the legal right of entry to the property to abate the violation and the owner or legal occupant has refused access. Easements authorize the permittee or operator to enter the property to abate the violation and an appraiser to enter the property to appraise damages that likely will result from the violation.

We announced receipt of the proposed amendment in the July 19, 2004, **Federal Register** (69 FR 42939), and in the same document invited public comment and provided an opportunity for a public hearing on the adequacy of the proposed amendment. The public comment period closed on August 18, 2004. We received one Industry comment.

III. OSM's Findings

Following are the findings we made concerning the amendment under SMCRA and the Federal regulations at 30 CFR 732.15 and 732.17. Relevant to our findings in this document are two previous **Federal Register** notices in which we addressed Kentucky's easement of necessity provisions. On June 20, 2001, we approved the creation of an easement of necessity for a permittee or operator who lacks legal right of entry, or permission to enter land to abate conditions that create imminent danger to the public or imminent significant environmental harm as cited in a notice or order of cessation under the approved Kentucky program (66 FR 33020). On November 6, 2002, we approved the creation of an easement of necessity for a permittee or operator who lacks legal right of entry, or permission to enter land to abate conditions that result in a violation that does not cause imminent danger to the public or imminent significant environmental harm. In the same notice, we approved Kentucky's property damage appraisal procedures, which follow the effective date of an easement of necessity, to the extent that the appraisal processes do not delay the abatement of violations (67 FR 67524). The appraisal processes provide for the appraisal of damages, including loss of use, that will result from the violations, as abated, and those that are likely to occur to the property if the permittee or operator is allowed to enter the property to abate the violation.

Any revisions that we do not specifically discuss below concern nonsubstantive wording or editorial changes. The following subsections represent the changes to KRS 350.280.

Easements of Necessity for Notices or Cessation Orders Directing Abatement of a Violation on the Basis of an Imminent Danger to Health and Safety of the Public or Significant Imminent Environmental Harm

Subsection (1)(b)—Kentucky proposes to delete the language within the parentheses in the following paragraph:

If a permittee or operator has been issued a notice or order directing abatement of a violation on the basis of an imminent danger to health and safety of the public or significant imminent environmental harm (and the violation involves an order of cessation and immediate compliance or an order to abate and alleviate in which the cabinet directs the permittee or operator to begin immediate abatement of the violation), and the notice or order requires access to property for which the permittee or operator does not have the legal right of entry necessary in order to abate that violation, and the owner or legal occupant of the property has refused access, an easement of necessity is recognized on behalf of the permittee or operator for the limited purpose of abating that violation. The easement of necessity becomes effective, and the permittee or operator is authorized to enter the property to undertake immediate action to abate the violation if he or she takes the actions specified in (1)(b)1 through 3.

Subsection (1)(b)1—Kentucky proposes to add the italicized language in the following subsection, which immediately follows the language above:

Provides to the property owner or legal occupant a copy of the cabinet's order *and a plan of action reasonably calculated to result in abatement of the violation, repair of the damage, and restoration of the property, and provides proof of liability insurance and workers' compensation insurance covering any accidents or injuries occurring on the property during the remedial work.*

Subsections (1)(b) and (1)(b)1 were originally approved on June 20, 2001, as no less stringent than Section 521 of SMCRA and consistent with 30 CFR 843.11 because they provided a method for ensuring the abatement of an imminent danger that is in addition to the methods provided for in the Federal rules. The revisions Kentucky proposes in this amendment do not alter that finding. Therefore, subsections (1)(b) and (1)(b)1 are approved in accordance with Section 505(b) of SMCRA.

Subsection (1)(b)3—Kentucky proposes to add the italicized language and delete the language within the parentheses in the following subsection:

Provides to the property owner or legal occupant a statement that he or she, the permittee or operator, *will diligently pursue abatement of the violation, and* will obtain an appraisal completed by a (certified) real estate appraiser *certified under KRS 324A* (or other qualified appraiser) of the damages to the property, including loss of use, that *have resulted* (will result) from the violation, (as abated, and those that are likely to occur to the property when the permittee or operator enters the property in order to abate the violation,) that the appraisal will be completed and provided to the property owner or legal occupant within three days of *abatement of the violation* by (entry of) the operator or permittee . . .

Subsection (1)(c)—Kentucky proposes to delete the language within the parentheses in the following paragraph:

Following the effective date of the easement of necessity, the following procedure shall be followed with respect to the appraisal of the damages (that will result from the violation, as abated, and those that are likely to occur to the property when the permittee or operator enters the property in order to abate the violation).

Subsection (1)(c)1—Kentucky proposes to require that an appraiser be certified and that the appraisal be completed and submitted to property owner or legal occupant within three days of abatement of the violation. The current language, proposed for deletion, requires completion of the appraisal and its submission to the property owner or legal occupant within three days of ''entry on the property.''

Subsection (1)(c)2—Kentucky proposes to extend the timeframe from three days to seven days for the property owner or legal occupant to accept or reject the appraisal.

Subsection (1)(c)3—Kentucky proposes to stipulate that a property owner may hire a real estate appraiser certified under KRS Chapter 324A if he/she rejects the permittee's appraisal. The following italicized language replaces the language within the parentheses: . . . *and this such appraisal shall be completed and provided to the permittee or operator within thirty days of receipt of the permittee's or operator's completed appraisal*. The appraisal will address damages, including loss of use that *have resulted* (will result) from the violation (as abated, and those that are likely to occur to the property if the permittee or operator is allowed to enter the property to abate the violation).

Subsection (1)(c)4—Kentucky proposes to replace the language within the parentheses with the italicized language. If the property owner or legal occupant *accepts the permittee or operator's appraisal, the permittee or operator shall promptly pay the property owner or legal occupant the amount of the damages reflected therein* (has the appraisal done, he or she shall have it completed and provided to the permittee or operator within seven days of receipt of the permittee's or operator's completed appraisal).

Subsection (1)(e)—Kentucky proposes to require that the appraisal and offer shall be considered accepted if the property owner or legal occupant does not accept or reject said appraisal and offer within the timeframe specified in subsection (1)(c)2 above. The requirement that the operator pay the appraised damages to a circuit court within three days of nonacceptance is deleted.

Subsection (1)(f)—Kentucky proposes to add a new subsection that requires an appraiser to calculate damages to the property, including loss of use, that resulted from the violation. It will be calculated as the difference between the fair market value of the property before the violation and after abatement of the violation, plus the reasonable rental value of the property between the effective date of the easement of necessity and the date of abatement of the violation.

Subsections (1)(b)3 and (1)(c) through (f), as amended, revise a property damage appraisal procedure that has no Federal counterpart. On November 6, 2002, we approved this procedure to the extent it does not delay the abatement of imminent dangers to the public or create environmental harm. The revisions Kentucky proposes in this amendment require that the appraisal be completed within three days of abatement of the violation.

We therefore find the revisions do not change the basis for our November 6, 2002, approval. That is, the revisions discussed above are approved to the extent that they do not cause a delay in the abatement of imminent dangers to the public or of significant, imminent environmental harm.

Easements of Necessity for Abatement of Violations That Do Not Cause Imminent Danger to the Public or Significant Imminent Environmental Harm

Subsection (2)—Kentucky proposes to specify that an appraiser be certified under KRS Chapter 324. Damages are described as those that likely will result from the violation. The following language within the parentheses describing damages has been deleted: * * * damages, including loss of use, that likely will result from the violation (as abated, and those that are likely to occur to the property if the permittee or operator is allowed to enter the property in order to abate the violation).

Subsection (3)(a)—Kentucky proposes to add a reference to subsection (2) pertaining to an easement for the limited purpose of allowing an appraisal.

Subsection (3)(a)4—Kentucky proposes to make the same changes as those specified in subsection (2) above. Kentucky is also requiring an entry fee to be calculated as one-half of the amount of the appraisal or $500, whichever is greater, for the privilege to enter the property and conduct the appraisal.

Subsection (3)(b)—Kentucky proposes to add a new subsection to specify that upon payment of the entry fee, an easement of necessity will be recognized on behalf of the permittee or operator for the limited purpose of abating the violation. Entry is authorized to enter the property to undertake immediate action to abate the violation, provided that the landowner has been provided a plan of action reasonably calculated to result in abatement of the violation, repair of the damage, and restoration of the property. The permittee or operator must provide proof of liability insurance and workers' compensation.

Subsection (3)(c)—Kentucky proposes to specify that following the effective date of the easement of necessity to abate the violation, the procedures in subsection (1)(c)–(f) will apply. Entry fee stipulations are provided. They require that the entry fee be deducted from any subsequent payment deemed due the property owner or legal occupant as a result of the post-abatement appraisal. If the entry fee exceeds the amount of all appraisals, the property owner or legal occupant is entitled to retain the fee in its entirety. The following sentence has been deleted. ''When the easement takes effect, the property owner or legal occupant shall allow access for the permittee's or operator's certified real estate appraiser or other qualified appraiser to conduct the appraisal.''

Subsection (4)—Kentucky proposes to clarify that the provisions of Section 1 of KRS 350.280 do not affect the right to bring a civil action for damages. The existing language pertaining to the appraisal of damages at subsections (4) through (8) is deleted, presumably because the appraisal procedures in subsections (1)(c) through (1)(f) will now likewise apply to violations that do not cause imminent damages to the public or significant, imminent environmental harm.

Like subsection (1) above, subsection (2) creates an appraisal procedure that has no Federal counterpart. Subsection (2) also provides for an entry fee with no Federal counterpart. On November 6, 2002, we approved the appraisal process to the extent that it does not delay the abatement of violations beyond 90 days as required by 30 CFR 843.12(c). We make the same finding in this notice. We further find that Kentucky's proposed entry fees are not inconsistent with SMCRA. Finally, because the deleted provisions at subsections (4) through (8) have been addressed in the revisions at subsections (1) and (2) above, we find that the deletions do not render the Kentucky program less stringent than SMCRA or the Federal regulations.

IV. Summary and Disposition of Comments

Public Comments

We solicited public comments on July 19, 2004, and provided an opportunity for a public hearing on the amendment. Because no one requested an opportunity to speak, a hearing was not held. The Kentucky Coal Association (KCA) submitted comments by electronic mail dated August 2, 2004 (Administrative Record No. KY–1633). The KCA supports the revisions proposed by Kentucky because it believes coal operators will have reasonable access to property when they ''inadvertently impact land off their permitted property.''

Federal Agency Comments

According to 30 CFR 732.17(h)(11)(i), on July 29, 2004, we solicited comments on the proposed amendment submitted on May 14, 2004, from various Federal agencies with an actual or potential interest in the Kentucky program (Administrative No. KY–1631). We received no responses.

Environmental Protection Agency (EPA)

Pursuant to 30 CFR 732.17(h)(11)(ii), OSM is required to obtain the written concurrence of the EPA with respect to those provisions of the proposed program amendment that relate to air or water quality standards promulgated under the authority of the Clean Water Act (33 U.S.C. 1251 *et seq.*) or the Clean Air Act (42 U.S.C. 7401 *et seq.*). Because the provisions of this amendment do not relate to air or water quality standards, we did not request EPA's concurrence.

V. OSM's Decision

Based on the above findings, we are approving the amendment as submitted by Kentucky on May 14, 2004.

To implement this decision, we are amending the Federal regulations at 30 CFR part 917 which codify decisions concerning the Kentucky program. We find that good cause exists under 5 U.S.C. 553(d)(3) to make this final rule effective immediately. Section 503(a) of SMCRA requires that Kentucky's program demonstrate that it has the capability of carrying out the provisions of the Act and meeting its purposes. Making this regulation effective immediately will expedite that process. SMCRA requires consistency of State and Federal standards.

VI. Procedural Determinations

Executive Order 12630—Takings

The provisions in the rule based on counterpart Federal regulations do not have takings implications. This determination is based on the analysis performed for the counterpart Federal regulation. The revisions made at the initiative of the State that do not have Federal counterparts have also been reviewed and a determination made that they do not have takings implications. This determination is based on the fact that the provisions are administrative and procedural in nature and are not expected to have a substantive effect on the regulated industry.

Executive Order 12866—Regulatory Planning and Review

This rule is exempted from review by the Office of Management and Budget under Executive Order 12866.

Executive Order 12988—Civil Justice Reform

The Department of the Interior has conducted the reviews required by section 3 of Executive Order 12988 and has determined that this rule meets the applicable standards of subsections (a) and (b) of that section. However, these standards are not applicable to the actual language of State regulatory programs and program amendments because each program is drafted and promulgated by a specific State, not by OSM. Under sections 503 and 505 of SMCRA (30 U.S.C. 1253 and 1255) and the Federal regulations at 30 CFR 730.11, 732.15, and 732.17(h)(10), decisions on proposed State regulatory programs and program amendments submitted by the States must be based solely on a determination of whether the submittal is consistent with SMCRA and its implementing Federal regulations and whether the other requirements of 30 CFR parts 730, 731, and 732 have been met.

Executive Order 13132—Federalism

This rule does not have Federalism implications. SMCRA delineates the roles of the Federal and State governments with regard to the regulation of surface coal mining and reclamation operations. One of the purposes of SMCRA is to ''establish a nationwide program to protect society and the environment from the adverse effects of surface coal mining operations.'' Section 503(a)(1) of SMCRA requires that State laws regulating surface coal mining and reclamation operations be ''in accordance with'' the requirements of SMCRA, and section 503(a)(7) requires that State programs contain rules and regulations ''consistent with'' regulations issued by the Secretary pursuant to SMCRA.

Executive Order 13175—Consultation and Coordination With Indian Tribal Governments

In accordance with Executive Order 13175, we have evaluated the potential effects of this rule on Federally recognized Indian tribes and have determined that the rule does not have substantial direct effects on one or more Indian tribes, on the relationship between the Federal Government and Indian tribes, or on the distribution of power and responsibilities between the Federal Government and Indian tribes. The basis for this determination is that our decision is on a State regulatory program and does not involve a Federal regulation involving Indian lands.

Executive Order 13211—Regulations That Significantly Affect The Supply, Distribution, or Use of Energy

On May 18, 2001, the President issued Executive Order 13211 which requires agencies to prepare a Statement of Energy Effects for a rule that is (1) considered significant under Executive Order 12866, and (2) likely to have a significant adverse effect on the supply, distribution, or use of energy. Because this rule is exempt from review under Executive Order 12866 and is not expected to have a significant adverse effect on the supply, distribution, or use of energy, a Statement of Energy Effects is not required.

National Environmental Policy Act

This rule does not require an environmental impact statement because section 702(d) of SMCRA (30 U.S.C. 1292(d)) provides that agency decisions on proposed State regulatory program provisions do not constitute major Federal actions within the meaning of section 102(2)(C) of the National Environmental Policy Act (42 U.S.C. 4332(2)(C)).

Paperwork Reduction Act

This rule does not contain information collection requirements that require approval by OMB under the Paperwork Reduction Act (44 U.S.C. 3507 *et seq.*).

Regulatory Flexibility Act

The Department of the Interior certifies that a portion of the provisions in this rule will not have a significant economic impact on a substantial number of small entities under the Regulatory Flexibility Act (5 U.S.C. 601 *et seq.*) because they are based upon counterpart Federal regulations for which an economic analysis was prepared and certification made that such regulations would not have a significant economic effect upon a

substantial number of small entities. In making the determination as to whether this rule would have a significant economic impact, the Department relied upon the data and assumptions for the counterpart Federal regulations. The Department of the Interior also certifies that the provisions in this rule that are not based upon counterparts Federal regulations will not have a significant economic impact on a substantial number of small entities under the Regulatory Flexibility Act (5 U.S.C. 601 *et seq.*). This determination is based on the fact that the provisions are administrative and procedural in nature and are not expected to have a substantive effect on the regulated industry.

Small Business Regulatory Enforcement Fairness Act

This rule is not a major rule under 5 U.S.C. 804(2), the Small Business Regulatory Enforcement Fairness Act. This rule: (a) Does not have an annual effect on the economy of $100 million; (b) will not cause a major increase in costs or prices for consumers, individual industries, Federal, State, or local government agencies, or geographic regions; and (c) does not have significant adverse effects on competition, employment, investment, productivity, innovation, or the ability of U.S.-based enterprises to compete with foreign-based enterprises. This determination is based upon the fact that a portion of the State provisions are based upon counterpart Federal regulations for which an analysis was prepared and a determination made that the Federal regulation was not considered a major rule. For the portion of the State provisions that is not based upon counterpart Federal regulations, this determination is based upon the fact that the State provisions are administrative and procedural in nature and are not expected to have a substantive effect on the regulated industry.

Unfunded Mandates

This rule will not impose an unfunded mandate on State, local, or tribal governments or the private sector of $100 million or more in any given year. This determination is based upon the fact that a portion of the State submittal, which is the subject of this rule, is based upon counterpart Federal regulations for which an analysis was prepared and a determination made that the Federal regulation did not impose an unfunded mandate. For the portion of the State provisions that is not based upon counterpart Federal regulations, this determination is based upon the fact that the State provisions are administrative and procedural in nature and are not expected to have a substantive effect on the regulated industry.

List of Subjects in 30 CFR Part 917

Intergovernmental relations, Surface mining, Underground mining.

Dated: October 18, 2004.

Brent Wahlquist,

Regional Director, Appalachian Regional Coordinating Center.

■ For the reasons set out in the preamble, 30 CFR part 917 is amended as set forth below:

PART 917—KENTUCKY

■ 1. The authority citation for part 917 continues to read as follows:

Authority: 30 U.S.C. 1201 *et seq.*

■ 2. Section 917.15 is amended in the table by adding a new entry in chronological order by the ''Date of Final Publication'' to read as follows:

§ 917.15 Approval of Kentucky regulatory program amendments.

* * * * *

Original amendment submission date	Date of final publication	Citation/description
* *	* *	* * *
May 14, 2004	December 20, 2004	KRS 350.280, subsections (1) (b), (1) (c), 1(e), 1(f), (2), (3), (4); subsections 4(a)–(d), (5), (6), (7) and (8) are deleted.

[FR Doc. 04–27754 Filed 12–17–04; 8:45 am]

BILLING CODE 4310–05–P

DEPARTMENT OF THE TREASURY

Office of the Secretary

31 CFR Part 10

[TD 9165]

RIN 1545–BA70

Regulations Governing Practice Before the Internal Revenue Service

AGENCY: Office of the Secretary, Treasury.

ACTION: Final regulations.

SUMMARY: This document contains final regulations revising the regulations governing practice before the Internal Revenue Service (Circular 230). These regulations affect individuals who practice before the Internal Revenue Service. These final regulations set forth best practices for tax advisors providing advice to taxpayers relating to Federal tax issues or submissions to the IRS. These final regulations also provide standards for covered opinions and other written advice.

DATES: *Effective Date:* These regulations are effective December 20, 2004.

Applicability Date: For dates of applicability, see §§ 10.33(c),10.35(g), 10.36(b), 10.37(b), 10.38(b), 10.52(b), and 10.93.

FOR FURTHER INFORMATION CONTACT: Heather L. Dostaler at (202) 622–4940, or Brinton T. Warren at (202) 622–7800 (not toll-free numbers).

SUPPLEMENTARY INFORMATION:

Paperwork Reduction Act

The collection of information contained in these final regulations has been reviewed and approved by the Office of Management and Budget in accordance with the Paperwork Reduction Act of 1995 (44 U.S.C. 3507(d)) under control number 1545–1871. The collections of information (disclosure requirements) in these final regulations are in § 10.35(e). Section 10.35(e) requires a practitioner providing a covered opinion to make certain disclosures in the beginning of marketed opinions, limited scope opinions and opinions that fail to conclude at a confidence level of at least more likely than not. In addition, certain relationships between the practitioner and a person promoting or marketing a tax shelter must be disclosed. A practitioner may be required to make one or more disclosures. The collection of this material helps to ensure that taxpayers who receive a tax shelter opinion are informed of any facts or circumstances that might limit the use of the opinion. The collection of information is mandatory.

Estimated total annual disclosure burden is 13,333 hours.

Estimated annual burden per disclosing practitioner varies from 5 to 10 minutes, depending on individual circumstances, with an estimated average of 8 minutes.

Estimated number of disclosing practitioners is 100,000.

Estimated annual frequency of responses is on occasion.

An agency may not conduct or sponsor, and a person is not required to respond to, a collection of information unless it displays a valid control number.

Comments concerning the accuracy of this burden estimate and suggestions for reducing this burden should be sent to the Internal Revenue Service, Attn: IRS Reports Clearance Officer, W:SE:CAR:MP:T:T:SP, Washington, DC 20224, and to the Office of Management and Budget, Attn: Desk Officer for the Department of the Treasury, Office of Information and Regulatory Affairs, Washington, DC 20503. Books or records relating to a collection of information must be retained as long as their contents might become material in the administration of any internal revenue law. Generally, tax returns and tax return information are confidential, as required by 26 U.S.C. 6103.

Background

Section 330 of title 31 of the United States Code authorizes the Secretary of the Treasury to regulate practice before the Treasury Department. The Secretary has published the regulations in Circular 230 (31 CFR part 10). On December 30, 2003, the Treasury Department and the IRS published in the **Federal Register** (68 FR 75186) proposed amendments to the regulations (REG–122379–02) (the proposed regulations) to set forth best practices for tax advisors providing advice to taxpayers relating to Federal tax issues or submissions to the IRS and to modify the standards for certain tax shelter opinions. A public hearing was held on February 19, 2004. Written public comments responding to the proposed regulations were received. After thorough consideration of the public comments, the proposed regulations are adopted as revised by this Treasury decision.

Explanation of Provisions

Tax advisors play a critical role in the Federal tax system, which is founded on principles of compliance and voluntary self-assessment. The tax system is best served when the public has confidence in the honesty and integrity of the professionals providing tax advice. To restore, promote, and maintain the public's confidence in those individuals and firms, these final regulations set forth best practices applicable to all tax advisors. These regulations also provide mandatory requirements for practitioners who provide covered opinions. The scope of these regulations is limited to practice before the IRS. These regulations do not alter or supplant other ethical standards applicable to practitioners.

On October 22, 2004, the President signed the American Jobs Creation Act of 2004, Pub. L. 108–357, (118 Stat. 1418)(the Act), which amended section 330 of title 31 of the United States Code to clarify that the Secretary may impose standards for written advice relating to a matter that is identified as having a potential for tax avoidance or evasion. The Act also authorizes the Treasury Department and the IRS to impose a monetary penalty against a practitioner who violates any provision of Circular 230. These final regulations do not reflect amendments made by the Act. The Treasury Department and the IRS expect to propose additional regulations implementing the Act's provisions.

Best Practices

The final regulations adopt the best practices set forth in the proposed regulations with modifications. These best practices are aspirational. A practitioner who fails to comply with best practices will not be subject to discipline under these regulations. Similarly, the provision relating to steps to ensure that a firm's procedures are consistent with best practices, now set forth in § 10.33(b), is aspirational. Although best practices are solely aspirational, tax professionals are expected to observe these practices to preserve public confidence in the tax system.

Standards for Covered Opinions

The opinion standards of § 10.35 are adopted with modifications. The provisions of § 10.35 in the final regulations are reorganized to clarify the provisions. Opinions subject to § 10.35 are defined as *covered opinions.*

Definition of Covered Opinion

Under the final regulations, the definition of a *covered opinion* includes written advice (including electronic communications) that concerns one or more Federal tax issue(s) arising from: (1) a listed transaction; (2) any plan or arrangement, the principal purpose of which is the avoidance or evasion of any tax; or (3) any plan or arrangement, a significant purpose of which is the avoidance or evasion of tax if the written advice (A) is a reliance opinion, (B) is a marketed opinion, (C) is subject to conditions of confidentiality, or (D) is subject to contractual protection. A reliance opinion is written advice that concludes at a confidence level of at least more likely than not that one or more significant Federal tax issues would be resolved in the taxpayer's favor.

Written advice will not be treated as a reliance opinion if the practitioner prominently discloses in the written advice that it was not written to be used and cannot be used for the purpose of avoiding penalties. Similarly, written advice generally will not be treated as a marketed opinion if it does not concern a listed transaction or a plan or arrangement having the principal purpose of avoidance or evasion of tax and the written advice contains this disclosure. The Treasury Department and the IRS intend to amend 26 CFR 1.6664–4 to clarify that a taxpayer may not rely upon written advice that contains this disclosure to establish the reasonable cause and good faith defense to the accuracy-related penalties.

Written advice regarding a plan or arrangement having a significant purpose of tax avoidance or evasion is excluded from the definition of a covered opinion if the written advice concerns the qualification of a qualified plan or is included in documents required to be filed with the Securities and Exchange Commission. The final regulations also adopt an exclusion for preliminary advice if the practitioner is reasonably expected to provide subsequent advice that satisfies the requirements of the regulations.

Written advice that is not a *covered opinion* for purposes of § 10.35 is subject to the standards set forth in new § 10.37.

Municipal Bond Opinions

After careful consideration, the Treasury Department and the IRS have concluded that practitioners rendering opinions concerning the tax treatment of municipal bonds should be subject to the same professional standards that are applicable to all other practitioners. The standards for certain opinions concerning the tax treatment of municipal bonds (*State or local bond opinions*) that are included in offering materials that otherwise would be covered opinions are being issued separately in proposed form. The proposed standards will require practitioners to exercise the same degree of diligence with respect to ascertaining the relevant facts and discussing the significant Federal tax issues, but will take into account the unique

circumstances of the municipal bond market.

To give bond practitioners an opportunity to comment on the proposed standards for State or local bond opinions, opinions that are included in offering materials, including an official statement, are excluded from the definition of covered opinions in these final regulations. Thus, State or local bond opinions included in offering materials will not be subject to the opinion standards of § 10.35 or proposed § 10.39 until 120 days after the proposed regulations are finalized.

The exclusion for State or local bond opinions applies only to the requirements for covered opinions set forth in § 10.35. State or local bond opinions are subject to the standards set forth in § 10.37 relating to requirements for other written advice, and practitioners who prepare bond opinions must comply with any other applicable requirement provided in Circular 230.

Requirements for Covered Opinions

In general, the requirements for all *covered opinions* are adopted as proposed. The final regulations provide that a practitioner providing a *covered opinion,* including a *marketed opinion,* must not assume that a transaction has a business purpose or is potentially profitable apart from tax benefits, or make an assumption with respect to a material valuation issue.

Required Disclosures

In general, the required disclosures of § 10.35(e) are adopted as proposed. These disclosures ensure that taxpayers receive information that is necessary to their evaluation of, and reliance on, a *covered opinion.*

Requirements for Other Written Advice

The final regulations also set forth requirements for written advice that is not a *covered opinion.* Under § 10.37 a practitioner must not give written advice if the practitioner: (1) Bases the written advice on unreasonable factual or legal assumptions; (2) unreasonably relies upon representations, statements, findings or agreements of the taxpayer or any other person; (3) fails to consider all relevant facts; or (4) takes into account the possibility that a tax return will not be audited, that an issue will not be raised on audit, or that an issue will be settled. Section 10.37, unlike § 10.35, does not require that the practitioner describe in the written advice the relevant facts (including assumptions and representations), the application of the law to those facts, or the practitioner's conclusion with respect to the law and the facts. The scope of the engagement and the type and specificity of the advice sought by the client, in addition to all other facts and circumstances, will be considered in determining whether a practitioner has failed to comply with the requirements of § 10.37.

Procedures To Ensure Compliance

In general, the procedures to ensure compliance with requirements of § 10.35 are adopted as proposed and set forth in § 10.36.

Advisory Committees on the Integrity of Tax Professionals

Newly designated § 10.38, formerly § 10.37 in the proposed regulations, is adopted as proposed with the following modifications. Section 10.38 is modified to clarify that an advisory committee may not make recommendations about actual practitioner cases, or have access to information pertaining to actual cases. The section also is modified to clarify that the Director of the Office of Professional Responsibility should ensure that membership of these committees is balanced among those individuals who practice as attorneys, accountants and enrolled agents.

Applicability Dates

To eliminate any adverse impact that the adoption of the new requirements for *covered opinions* or other written advice could have on pending or imminent transactions, the applicability date of the standards for *covered opinions* under § 10.35 and other written advice under § 10.37 (and the procedures to ensure compliance as they relate to *covered opinions* under § 10.36) is June 20, 2005.

Special Analyses

It has been determined that this final rule is not a significant regulatory action as defined in Executive Order 12866. Therefore, a regulatory assessment is not required. It is hereby certified that these regulations will not have a significant economic impact on a substantial number of small entities. Persons authorized to practice before the IRS have long been required to comply with certain standards of conduct. The added disclosure requirements for tax shelter opinions imposed by these regulations will not have a significant economic impact on a substantial number of small entities because, as previously noted, the estimated burden of disclosures is minimal. Practitioners have the information needed to determine whether any of the disclosures will be required before the opinion is prepared and, for some disclosures, the regulations provide practitioners with the language to be included in the opinion. Therefore, a regulatory flexibility analysis under the Regulatory Flexibility Act (5 U.S.C. chapter 6) is not required. Pursuant to section 7805(f) of the Internal Revenue Code, the proposed regulations preceding these regulations were submitted to the Chief Counsel for Advocacy of the Small Business Administration for comment on its impact on small businesses.

Drafting Information

The principal authors of the regulations are Heather L. Dostaler and Brinton T. Warren of the Office of the Associate Chief Counsel (Procedure and Administration), Administrative Provisions and Judicial Practice Division.

List of Subjects in 31 CFR Part 10

Administrative practice and procedure, Lawyers, Accountants, Enrolled agents, Enrolled actuaries, Appraisers.

Adoption of Amendments to the Regulations

■ Accordingly, 31 CFR part 10 is amended as follows:

PART 10—PRACTICE BEFORE THE INTERNAL REVENUE SERVICE

■ **Paragraph 1.** The authority citation for subtitle A, part 10 is revised to read as follows:

Authority: Sec. 3, 23 Stat. 258, secs. 2–12, 60 Stat. 237 *et seq.*; 5 U.S.C. 301, 500, 551–559; 31 U.S.C. 330; Reorg. Plan No. 26 of 1950, 15 FR 4935, 64 Stat. 1280, 3 CFR, 1949–1953 Comp., p. 1017.

■ **Par. 2.** Section 10.33 is revised to read as follows:

§ 10.33 Best practices for tax advisors.

(a) *Best practices.* Tax advisors should provide clients with the highest quality representation concerning Federal tax issues by adhering to best practices in providing advice and in preparing or assisting in the preparation of a submission to the Internal Revenue Service. In addition to compliance with the standards of practice provided elsewhere in this part, best practices include the following:

(1) Communicating clearly with the client regarding the terms of the engagement. For example, the advisor should determine the client's expected purpose for and use of the advice and should have a clear understanding with the client regarding the form and scope of the advice or assistance to be rendered.

(2) Establishing the facts, determining which facts are relevant, evaluating the

reasonableness of any assumptions or representations, relating the applicable law (including potentially applicable judicial doctrines) to the relevant facts, and arriving at a conclusion supported by the law and the facts.

(3) Advising the client regarding the import of the conclusions reached, including, for example, whether a taxpayer may avoid accuracy-related penalties under the Internal Revenue Code if a taxpayer acts in reliance on the advice.

(4) Acting fairly and with integrity in practice before the Internal Revenue Service.

(b) *Procedures to ensure best practices for tax advisors.* Tax advisors with responsibility for overseeing a firm's practice of providing advice concerning Federal tax issues or of preparing or assisting in the preparation of submissions to the Internal Revenue Service should take reasonable steps to ensure that the firm's procedures for all members, associates, and employees are consistent with the best practices set forth in paragraph (a) of this section.

(c) *Applicability date.* This section is effective after June 20, 2005.

■ **Par. 3.** Sections 10.35, 10.36, 10.37 and 10.38 are added to subpart B to read as follows:

§ 10.35 Requirements for covered opinions.

(a) A practitioner who provides a covered opinion shall comply with the standards of practice in this section.

(b) *Definitions.* For purposes of this subpart—

(1) A *practitioner* includes any individual described in § 10.2(e).

(2) *Covered opinion*—(i) *In general.* A *covered opinion* is written advice (including electronic communications) by a practitioner concerning one or more Federal tax issues arising from—

(A) A transaction that is the same as or substantially similar to a transaction that, at the time the advice is rendered, the Internal Revenue Service has determined to be a tax avoidance transaction and identified by published guidance as a listed transaction under 26 CFR 1.6011–4(b)(2);

(B) Any partnership or other entity, any investment plan or arrangement, or any other plan or arrangement, the principal purpose of which is the avoidance or evasion of any tax imposed by the Internal Revenue Code; or

(C) Any partnership or other entity, any investment plan or arrangement, or any other plan or arrangement, a significant purpose of which is the avoidance or evasion of any tax imposed by the Internal Revenue Code if the written advice—

(*1*) Is a *reliance opinion;*

(*2*) Is a *marketed opinion;*

(*3*) Is subject to *conditions of confidentiality;* or

(*4*) Is subject to *contractual protection.*

(ii) *Excluded advice.* A *covered opinion* does not include—

(A) Written advice provided to a client during the course of an engagement if a practitioner is reasonably expected to provide subsequent written advice to the client that satisfies the requirements of this section; or

(B) Written advice, other than advice described in paragraph (b)(2)(i)(A) of this section (concerning listed transactions) or paragraph (b)(2)(ii)(B) of this section (concerning the principal purpose of avoidance or evasion) that—

(*1*) Concerns the qualification of a qualified plan;

(*2*) Is a *State or local bond opinion;* or

(*3*) Is included in documents required to be filed with the Securities and Exchange Commission.

(3) A *Federal tax issue* is a question concerning the Federal tax treatment of an item of income, gain, loss, deduction, or credit, the existence or absence of a taxable transfer of property, or the value of property for Federal tax purposes. For purposes of this subpart, a *Federal tax issue* is significant if the Internal Revenue Service has a reasonable basis for a successful challenge and its resolution could have a significant impact, whether beneficial or adverse and under any reasonably foreseeable circumstance, on the overall Federal tax treatment of the transaction(s) or matter(s) addressed in the opinion.

(4) *Reliance opinion*—(i) Written advice is a *reliance opinion* if the advice concludes at a confidence level of more likely than not (a greater than 50 percent likelihood) that one or more significant Federal tax issues would be resolved in the taxpayer's favor.

(ii) For purposes of this section, written advice, other than advice described in paragraph (b)(2)(i)(A) of this section (concerning listed transactions) or paragraph (b)(2)(i)(B) of this section (concerning the principal purpose of avoidance or evasion), is not treated as a *reliance opinion* if the practitioner prominently discloses in the written advice that it was not intended or written by the practitioner to be used, and that it cannot be used by the taxpayer, for the purpose of avoiding penalties that may be imposed on the taxpayer.

(5) *Marketed opinion*—(i) Written advice is a *marketed opinion* if the practitioner knows or has reason to know that the written advice will be used or referred to by a person other than the practitioner (or a person who is a member of, associated with, or employed by the practitioner's firm) in promoting, marketing or recommending a partnership or other entity, investment plan or arrangement to one or more taxpayer(s).

(ii) For purposes of this section, written advice, other than advice described in paragraph (b)(2)(i)(A) of this section (concerning listed transactions) or paragraph (b)(2)(i)(B) of this section (concerning the principal purpose of avoidance or evasion), is not treated as a *marketed opinion* if the practitioner prominently discloses in the written advice that—

(A) The advice was not intended or written by the practitioner to be used, and that it cannot be used by any taxpayer, for the purpose of avoiding penalties that may be imposed on the taxpayer;

(B) The advice was written to support the promotion or marketing of the transaction(s) or matter(s) addressed by the written advice; and

(C) The taxpayer should seek advice based on the taxpayer's particular circumstances from an independent tax advisor.

(6) *Conditions of confidentiality.* Written advice is subject to *conditions of confidentiality* if the practitioner imposes on one or more recipients of the written advice a limitation on disclosure of the tax treatment or tax structure of the transaction and the limitation on disclosure protects the confidentiality of that practitioner's tax strategies, regardless of whether the limitation on disclosure is legally binding. A claim that a transaction is proprietary or exclusive is not a limitation on disclosure if the practitioner confirms to all recipients of the written advice that there is no limitation on disclosure of the tax treatment or tax structure of the transaction that is the subject of the written advice.

(7) *Contractual protection.* Written advice is subject to *contractual protection* if the taxpayer has the right to a full or partial refund of fees paid to the practitioner (or a person who is a member of, associated with, or employed by the practitioner's firm) if all or a part of the intended tax consequences from the matters addressed in the written advice are not sustained, or if the fees paid to the practitioner (or a person who is a member of, associated with, or employed by the practitioner's firm) are contingent on the taxpayer's realization of tax benefits from the transaction. All the facts and circumstances relating to

the matters addressed in the written advice will be considered when determining whether a fee is refundable or contingent, including the right to reimbursements of amounts that the parties to a transaction have not designated as fees or any agreement to provide services without reasonable compensation.

(8) *Prominently disclosed.* An item required to be *prominently disclosed* must be set forth in a separate section at the beginning of the written advice in a bolded typeface that is larger than any other typeface used in the written advice.

(9) *State or local bond opinion.* A *State or local bond opinion* is written advice with respect to a *Federal tax issue* included in any materials delivered to a purchaser of a State or local bond in connection with the issuance of the bond in a public or private offering, including an official statement (if one is prepared), that concerns only the excludability of interest on a State or local bond from gross income under section 103 of the Internal Revenue Code, the application of section 55 of the Internal Revenue Code to a State or local bond, the status of a State or local bond as a qualified tax-exempt obligation under section 265(b)(3) of the Internal Revenue Code, the status of a State or local bond as a qualified zone academy bond under section 1397E of the Internal Revenue Code, or any combination of the above.

(c) *Requirements for covered opinions.* A practitioner providing a *covered opinion* must comply with each of the following requirements.

(1) *Factual matters.* (i) The practitioner must use reasonable efforts to identify and ascertain the facts, which may relate to future events if a transaction is prospective or proposed, and to determine which facts are relevant. The opinion must identify and consider all facts that the practitioner determines to be relevant.

(ii) The practitioner must not base the opinion on any unreasonable factual assumptions (including assumptions as to future events). An unreasonable factual assumption includes a factual assumption that the practitioner knows or should know is incorrect or incomplete. For example, it is unreasonable to assume that a transaction has a business purpose or that a transaction is potentially profitable apart from tax benefits. A factual assumption includes reliance on a projection, financial forecast or appraisal. It is unreasonable for a practitioner to rely on a projection, financial forecast or appraisal if the practitioner knows or should know that the projection, financial forecast or appraisal is incorrect or incomplete or was prepared by a person lacking the skills or qualifications necessary to prepare such projection, financial forecast or appraisal. The opinion must identify in a separate section all factual assumptions relied upon by the practitioner.

(iii) The practitioner must not base the opinion on any unreasonable factual representations, statements or findings of the taxpayer or any other person. An unreasonable factual representation includes a factual representation that the practitioner knows or should know is incorrect or incomplete. For example, a practitioner may not rely on a factual representation that a transaction has a business purpose if the representation does not include a specific description of the business purpose or the practitioner knows or should know that the representation is incorrect or incomplete. The opinion must identify in a separate section all factual representations, statements or findings of the taxpayer relied upon by the practitioner.

(2) *Relate law to facts.* (i) The opinion must relate the applicable law (including potentially applicable judicial doctrines) to the relevant facts.

(ii) The practitioner must not assume the favorable resolution of any significant Federal tax issue except as provided in paragraphs (c)(3)(v) and (d) of this section, or otherwise base an opinion on any unreasonable legal assumptions, representations, or conclusions.

(iii) The opinion must not contain internally inconsistent legal analyses or conclusions.

(3) *Evaluation of significant Federal tax issues*—(i) *In general.* The opinion must consider all significant Federal tax issues except as provided in paragraphs (c)(3)(v) and (d) of this section.

(ii) *Conclusion as to each significant Federal tax issue.* The opinion must provide the practitioner's conclusion as to the likelihood that the taxpayer will prevail on the merits with respect to each significant Federal tax issue considered in the opinion. If the practitioner is unable to reach a conclusion with respect to one or more of those issues, the opinion must state that the practitioner is unable to reach a conclusion with respect to those issues. The opinion must describe the reasons for the conclusions, including the facts and analysis supporting the conclusions, or describe the reasons that the practitioner is unable to reach a conclusion as to one or more issues. If the practitioner fails to reach a conclusion at a confidence level of at least more likely than not with respect to one or more significant Federal tax issues considered, the opinion must include the appropriate disclosure(s) required under paragraph (e) of this section.

(iii) *Evaluation based on chances of success on the merits.* In evaluating the significant Federal tax issues addressed in the opinion, the practitioner must not take into account the possibility that a tax return will not be audited, that an issue will not be raised on audit, or that an issue will be resolved through settlement if raised.

(iv) *Marketed opinions.* In the case of a *marketed opinion,* the opinion must provide the practitioner's conclusion that the taxpayer will prevail on the merits at a confidence level of at least more likely than not with respect to each significant Federal tax issue. If the practitioner is unable to reach a more likely than not conclusion with respect to each significant Federal tax issue, the practitioner must not provide the marketed opinion, but may provide written advice that satisfies the requirements in paragraph (b)(5)(ii) of this section.

(v) *Limited scope opinions.* (A) The practitioner may provide an opinion that considers less than all of the significant Federal tax issues if—

(*1*) The practitioner and the taxpayer agree that the scope of the opinion and the taxpayer's potential reliance on the opinion for purposes of avoiding penalties that may be imposed on the taxpayer are limited to the Federal tax issue(s) addressed in the opinion;

(*2*) The opinion is not advice described in paragraph (b)(2)(i)(A) of this section (concerning listed transactions), paragraph (b)(2)(i)(B) of this section (concerning the principal purpose of avoidance or evasion) or paragraph (b)(5) of this section (a *marketed opinion*); and

(*3*) The opinion includes the appropriate disclosure(s) required under paragraph (e) of this section.

(B) A practitioner may make reasonable assumptions regarding the favorable resolution of a Federal tax issue (an assumed issue) for purposes of providing an opinion on less than all of the significant Federal tax issues as provided in this paragraph (c)(3)(v). The opinion must identify in a separate section all issues for which the practitioner assumed a favorable resolution.

(4) *Overall conclusion.* (i) The opinion must provide the practitioner's overall conclusion as to the likelihood that the Federal tax treatment of the transaction or matter that is the subject of the opinion is the proper treatment and the

reasons for that conclusion. If the practitioner is unable to reach an overall conclusion, the opinion must state that the practitioner is unable to reach an overall conclusion and describe the reasons for the practitioner's inability to reach a conclusion.

(ii) In the case of a *marketed opinion,* the opinion must provide the practitioner's overall conclusion that the Federal tax treatment of the transaction or matter that is the subject of the opinion is the proper treatment at a confidence level of at least more likely than not.

(d) *Competence to provide opinion; reliance on opinions of others.* (1) The practitioner must be knowledgeable in all of the aspects of Federal tax law relevant to the opinion being rendered, except that the practitioner may rely on the opinion of another practitioner with respect to one or more significant Federal tax issues, unless the practitioner knows or should know that the opinion of the other practitioner should not be relied on. If a practitioner relies on the opinion of another practitioner, the relying practitioner's opinion must identify the other opinion and set forth the conclusions reached in the other opinion.

(2) The practitioner must be satisfied that the combined analysis of the opinions, taken as a whole, and the overall conclusion, if any, satisfy the requirements of this section.

(e) *Required disclosures.* A covered opinion must contain all of the following disclosures that apply—

(1) *Relationship between promoter and practitioner.* An opinion must prominently disclose the existence of—

(i) Any compensation arrangement, such as a referral fee or a fee-sharing arrangement, between the practitioner (or the practitioner's firm or any person who is a member of, associated with, or employed by the practitioner's firm) and any person (other than the client for whom the opinion is prepared) with respect to promoting, marketing or recommending the entity, plan, or arrangement (or a substantially similar arrangement) that is the subject of the opinion; or

(ii) Any referral agreement between the practitioner (or the practitioner's firm or any person who is a member of, associated with, or employed by the practitioner's firm) and a person (other than the client for whom the opinion is prepared) engaged in promoting, marketing or recommending the entity, plan, or arrangement (or a substantially similar arrangement) that is the subject of the opinion.

(2) *Marketed opinions.* A *marketed opinion* must prominently disclose that—

(i) The opinion was written to support the promotion or marketing of the transaction(s) or matter(s) addressed in the opinion; and

(ii) The taxpayer should seek advice based on the taxpayer's particular circumstances from an independent tax advisor.

(3) *Limited scope opinions.* A limited scope opinion must prominently disclose that—

(i) The opinion is limited to the one or more Federal tax issues addressed in the opinion;

(ii) Additional issues may exist that could affect the Federal tax treatment of the transaction or matter that is the subject of the opinion and the opinion does not consider or provide a conclusion with respect to any additional issues; and

(iii) With respect to any significant Federal tax issues outside the limited scope of the opinion, the opinion was not written, and cannot be used by the taxpayer, for the purpose of avoiding penalties that may be imposed on the taxpayer.

(4) *Opinions that fail to reach a more likely than not conclusion.* An opinion that does not reach a conclusion at a confidence level of at least more likely than not with respect to a significant Federal tax issue must prominently disclose that—

(i) The opinion does not reach a conclusion at a confidence level of at least more likely than not with respect to one or more significant Federal tax issues addressed by the opinion; and

(ii) With respect to those significant Federal tax issues, the opinion was not written, and cannot be used by the taxpayer, for the purpose of avoiding penalties that may be imposed on the taxpayer.

(5) *Advice regarding required disclosures.* In the case of any disclosure required under this section, the practitioner may not provide advice to any person that is contrary to or inconsistent with the required disclosure.

(f) *Effect of opinion that meets these standards*—(1) *In general.* An opinion that meets the requirements of this section satisfies the practitioner's responsibilities under this section, but the persuasiveness of the opinion with regard to the tax issues in question and the taxpayer's good faith reliance on the opinion will be determined separately under applicable provisions of the law and regulations.

(2) *Standards for other written advice.* A practitioner who provides written advice that is not a covered opinion for purposes of this section is subject to the requirements of § 10.37.

(g) *Effective date.* This section applies to written advice that is rendered after June 20, 2005.

§ 10.36 Procedures to ensure compliance.

(a) *Requirements for covered opinions.* Any practitioner who has (or practitioners who have or share) principal authority and responsibility for overseeing a firm's practice of providing advice concerning Federal tax issues must take reasonable steps to ensure that the firm has adequate procedures in effect for all members, associates, and employees for purposes of complying with § 10.35. Any such practitioner will be subject to discipline for failing to comply with the requirements of this paragraph if—

(1) The practitioner through willfulness, recklessness, or gross incompetence does not take reasonable steps to ensure that the firm has adequate procedures to comply with § 10.35, and one or more individuals who are members of, associated with, or employed by, the firm are, or have, engaged in a pattern or practice, in connection with their practice with the firm, of failing to comply with § 10.35; or

(2) The practitioner knows or should know that one or more individuals who are members of, associated with, or employed by, the firm are, or have, engaged in a pattern or practice, in connection with their practice with the firm, that does not comply with § 10.35 and the practitioner, through willfulness, recklessness, or gross incompetence, fails to take prompt action to correct the noncompliance.

(b) *Effective date.* This section is applicable after June 20, 2005.

§ 10.37 Requirements for other written advice.

(a) *Requirements.* A practitioner must not give written advice (including electronic communications) concerning one or more Federal tax issues if the practitioner bases the written advice on unreasonable factual or legal assumptions (including assumptions as to future events), unreasonably relies upon representations, statements, findings or agreements of the taxpayer or any other person, does not consider all relevant facts that the practitioner knows or should know, or, in evaluating a Federal tax issue, takes into account the possibility that a tax return will not be audited, that an issue will not be raised on audit, or that an issue will be resolved through settlement if raised. All facts and circumstances, including

the scope of the engagement and the type and specificity of the advice sought by the client will be considered in determining whether a practitioner has failed to comply with this section. In the case of an opinion the practitioner knows or has reason to know will be used or referred to by a person other than the practitioner (or a person who is a member of, associated with, or employed by the practitioner's firm) in promoting, marketing or recommending to one or more taxpayers a partnership or other entity, investment plan or arrangement a significant purpose of which is the avoidance or evasion of any tax imposed by the Internal Revenue Code, the determination of whether a practitioner has failed to comply with this section will be made on the basis of a heightened standard of care because of the greater risk caused by the practitioner's lack of knowledge of the taxpayer's particular circumstances.

(b) *Effective date.* This section applies to written advice that is rendered after June 20, 2004.

§ 10.38 Establishment of advisory committees.

(a) *Advisory committees.* To promote and maintain the public's confidence in tax advisors, the Director of the Office of Professional Responsibility is authorized to establish one or more advisory committees composed of at least five individuals authorized to practice before the Internal Revenue Service. The Director should ensure that membership of an advisory committee is balanced among those who practice as attorneys, accountants, and enrolled agents. Under procedures prescribed by the Director, an advisory committee may review and make general recommendations regarding professional standards or best practices for tax advisors, including whether hypothetical conduct would give rise to a violation of §§ 10.35 or 10.36.

(b) *Effective date.* This section applies after December 20, 2004.

■ **Par. 4.** Section 10.52 is revised to read as follows:

§ 10.52 Violation of regulations.

(a) *Prohibited conduct.* A practitioner may be censured, suspended or disbarred from practice before the Internal Revenue Service for any of the following:

(1) Willfully violating any of the regulations (other than § 10.33) contained in this part; or

(2) Recklessly or through gross incompetence (within the meaning of § 10.51(l)) violating §§ 10.34, 10.35, 10.36 or 10.37.

(b) *Effective date.* This section applies after June 20, 2005.

■ **Par. 5.** Section 10.93 is revised to read as follows:

§ 10.93 Effective date.

Except as otherwise provided in each section and subject to § 10.91, Part 10 is applicable on July 26, 2002.

Mark E. Matthews,

Deputy Commissioner for Services and Enforcement, Internal Revenue Service.

Approved: December 8, 2004.

Arnold I. Havens,

General Counsel, Department of the Treasury.

[FR Doc. 04–27678 Filed 12–17–04; 8:45 am]

BILLING CODE 4830–01–P

DEPARTMENT OF HOMELAND SECURITY

Coast Guard

33 CFR Part 117

[CGD08–04–040]

RIN 1625–AA09

Drawbridge Operation Regulation; Mississippi River, Iowa, and Illinois

AGENCY: Coast Guard, DHS.

ACTION: Final rule.

SUMMARY: The Coast Guard is changing the regulation governing the Clinton Railroad Drawbridge, across the Upper Mississippi River at Mile 518.0, at Clinton, Iowa. The drawbridge would open on signal if at least 24 hours advance notice is given from 7:30 a.m., on December 17, 2004, until 7:30 a.m. on March 1, 2005. This rule allows time for making upgrades to critical mechanical components and perform scheduled annual maintenance and repairs.

DATES: This rule is effective 7:30 a.m., December 17, 2004, until 7:30 a.m., March 1, 2005.

ADDRESSES: Comments and material received from the public, as well as documents indicated in this preamble as being available in the docket, are part of the docket [CGD08–04–040] and are available for inspection or copying at room 2.107f in the Robert A. Young Federal Building at Eighth Coast Guard District, between 8 a.m. and 4 p.m., Monday through Friday, except Federal holidays. Commander (obr), Eighth Coast Guard District, maintains the public docket for this rulemaking.

FOR FURTHER INFORMATION CONTACT: Mr. Roger K. Wiebusch, Bridge Administrator, (314) 539–3900, extension 2378.

SUPPLEMENTARY INFORMATION:

Regulatory History

On November 9, 2004, we published a notice of proposed rulemaking (NPRM) entitled Drawbridge Operation Regulation; Mississippi River, Iowa and Illinois in the **Federal Register** (69 FR 64875). We received no comment letters on the proposed rule. No public meeting was requested, and none was held.

Good Cause for Making Rule Effective in Less Than 30 Days

Under 5 U.S.C. 553(d)(3), the Coast Guard finds that good cause exists for making this rule effective in less than 30 days after publication in the **Federal Register**. This drawbridge requires upgrades to critical mechanical components and annual maintenance that necessitate it to remain in the closed-to-navigation position from 7:30 a.m., December 17, 2004, until 7:30 a.m., March 1, 2005. Navigation on the waterway consists primarily of commercial tows and recreational watercraft that will not be significantly impacted due to the reduced navigation in winter months and due to the fact that the drawbridge will open upon 24 hours advanced notice. Thus, to keep the closure within the primary winter months this rule must go into effect by December 17, 2004.

Background and Purpose

On September 7, 2004, the Union Pacific Railroad Company, requested a temporary change to the operation of the Clinton Railroad Drawbridge across the Upper Mississippi River, Mile 518.0, at Clinton, Iowa to open on signal if at least 24 hour advance notice is given to facilitate critical bridge repair and annual maintenance. Advance notice may be given by calling the Clinton Yardmaster's office at (563) 244–3204 at any time; or (563) 244–3269 weekdays between 7 a.m. and 3:30 p.m.; or Mr. Tomaz Gawronski, office (515) 263–4536 or cell phone (515) 229–2993.

The Clinton Railroad Drawbridge navigation span has a vertical clearance of 18.7 feet above normal pool in the closed to navigation position.

Navigation on the waterway consists primarily of commercial tows and recreational watercraft and will not be significantly impacted due to the reduced navigation in winter months. Presently, the draw opens on signal for passage of river traffic. The Union Pacific Railroad Company requested the drawbridge be permitted to remain closed-to-navigation from 7:30 a.m., December 17, 2004, until 7:30 a.m., March 1, 2005, unless 24 hours advance notice is given of the need to open.

Winter conditions on the Upper Mississippi River coupled with the closure of Rock Island Railroad & Highway Drawbridge, mile 482.9, Upper Mississippi River, at Rock Island, Illinois will preclude any significant navigation demands for the drawspan opening. The Clinton Railroad Drawbridge, mile 518.0, Upper Mississippi River is located upstream from the Rock Island Railroad & Highway Drawbridge. Performing maintenance on the bridge during the winter, when the number of vessels likely to be impacted is minimal, is preferred to bridge closure or advance notification requirements during the navigation season. This temporary change to the drawbridge's operation has been coordinated with the commercial waterway operators.

Discussion of Comments and Changes

The Coast Guard received no comment letters. No changes will be made to this final rule.

Regulatory Evaluation

This rule is not a ''significant regulatory action'' under section 3(f) of Executive Order 12866, Regulatory Planning and Review, and does not require an assessment of potential costs and benefits under section 6(a)(3) of that Order. The Office of Management and Budget has not reviewed it under that Order. It is not ''significant'' under the regulatory policies and procedures of the Department of Homeland Security (DHS).

The Coast Guard expects that this temporary change to operation of the Clinton Railroad Drawbridge will have minimal economic impact on commercial traffic operating on the Upper Mississippi River. This temporary change has been written in such a manner as to allow for minimal interruption of the drawbridge's regular operation.

Small Entities

Under the Regulatory Flexibility Act (5 U.S.C. 601–612), we have considered whether this rule would have a significant economic impact on a substantial number of small entities. The term ''small entities'' comprises small businesses, not-for-profit organizations that are independently owned and operated and are not dominant in their fields, and governmental jurisdictions with populations of less than 50,000.

The Coast Guard certifies under 5 U.S.C. 605(b) that this rule would not have a significant economic impact on a substantial number of small entities.

Assistance for Small Entities

Under section 213(a) of the Small Business Regulatory Enforcement Fairness Act of 1996 (Public Law 104–121), we offered to assist small entities in understanding the rule so that they could better evaluate its effects on them and participate in the rulemaking process. Small businesses may send comments on the actions of Federal employees who enforce or otherwise determine compliance with, Federal regulations to the Small Business and Agriculture Regulatory Enforcement Ombudsman and the Regional Small Business Regulatory Fairness Boards. The Ombudsman evaluates these actions annually and rates each agency's responsiveness to small business. If you wish to comment on actions by employees of the Coast Guard, call 1–800–REG–FAIR (1–800–734–3247).

Collection of Information

This rule calls for no new collection of information under the Paperwork Reduction Act of 1995 (44 U.S.C. 3501–3520).

Federalism

A rule has implications for federalism under Executive Order 13132, Federalism, if it has a substantial direct effect on State or local governments and would either preempt State law or impose a substantial direct cost of compliance on them. We have analyzed this rule under that Order and have determined that it does not have implications for federalism.

Unfunded Mandates Reform Act

The Unfunded Mandates Reform Act of 1995 (2 U.S.C. 1531–1538) requires Federal agencies to assess the effects of their discretionary regulatory actions. In particular, the Act addresses actions that may result in the expenditure by a State, local, or tribal government, in the aggregate, or by the private sector of $100,000,000 or more in any one year. Though this rule will not result in such expenditure, we do discuss the effects of this rule elsewhere in this preamble.

Taking of Private Property

This rule will not affect a taking of private property or otherwise have taking implications under Executive Order 12630, Governmental Actions and Interference with Constitutionally Protected Property Rights.

Civil Justice Reform

This rule meets applicable standards in sections 3(a) and 3(b)(2) of Executive Order 12988, Civil Justice Reform, to minimize litigation, eliminate ambiguity, and reduce burden.

Protection of Children

We have analyzed this rule under Executive Order 13045, Protection of Children from Environmental Health Risks and Safety Risks. This rule is not an economically significant rule and does not create an environmental risk to health or risk to safety that may disproportionately affect children.

Indian Tribal Governments

This rule does not have tribal implications under Executive Order 13175, Consultation and Coordination with Indian Tribal Governments, because it does not have a substantial direct effect on one or more Indian tribes, on the relationship between the Federal Government and Indian tribes, or on the distribution of power and responsibilities between the Federal Government and Indian tribes.

Energy Effects

We have analyzed this rule under Executive Order 13211, Actions Concerning Regulations That Significantly Affect Energy Supply, Distribution, or Use. We have determined that it is not a ''significant regulatory action'' under that order because it is not a ''significant regulatory action'' under Executive Order 12866 and is not likely to have a significant adverse effect on the supply, distribution, or use of energy. The Administrator of the Office of Information and Regulatory Affairs has not designated it as a significant energy action. Therefore, it does not require a Statement of Energy Effects under Executive Order 13211.

Technical Standards

The National Technology Transfer and Advancement Act (NTTAA) (15 U.S.C. 272 note) directs agencies to use voluntary consensus standards in their regulatory activities unless the agency provides Congress, through the Office of Management and Budget, with an explanation of why using these standards would be inconsistent with applicable law or otherwise impractical. Voluntary consensus standards are technical standards (e.g., specifications of materials, performance, design, or operation; test methods; sampling procedures; and related management systems practices) that are developed or adopted by voluntary consensus standards bodies.

This rule does not use technical standards. Therefore, we did not consider the use of voluntary consensus standards.

Environment

We have analyzed this rule under Commandant Instruction M16475.1D, which guides the Coast Guard in complying with National Environmental Policy Act of 1969 (NEPA) (42 U.S.C. 4321–4370f), and have concluded that there are no factors in this case that would limit the use of a categorical exclusion under section 2.B.2 of the instruction. Therefore, this rule is categorically excluded, under figure 2–1, paragraph (32)(e) of the Instruction, from further environmental documentation.

Paragraph (32)(e) excludes the promulgation of operating regulations or procedures for drawbridges from the environmental documentation requirements of the National Environmental Policy Act (NEPA). Since this regulation would alter the normal operating conditions of the drawbridge, it falls within this exclusion. A ''Categorical exclusion Determination'' is available in the docket for inspection or copying where indicated under **ADDRESSES.**

List of Subjects in 33 CFR Part 117

Bridges.

Regulations

■ For the reasons discussed in the preamble, the Coast Guard amends 33 CFR part 117 as follows:

PART 117—DRAWBRIDGE OPERATION REGULATIONS

■ 1. The authority citation for part 117 continues to read as follows:

Authority: 33 U.S.C. 499; Department of Homeland Security Delegation No. 0170.1; 33 CFR 1.05–1(g); section 117.255 also issued under the authority of Pub. L. 102–587, 106 Stat. 5039.

■ 2. From 7:30 a.m., December 17, 2004, until 7:30 a.m., March 1, 2005, in § 117.671, add new paragraph (c) to read as follows:

§ 117.671 Upper Mississippi River.

* * * * *

(c) The Clinton Railroad Drawbridge, mile 518.0 Upper Mississippi River, at Clinton, Iowa, shall open on signal if at least 24 hours notice is given. Notice may be given by calling the Clinton Yardmaster's office at (563) 244–3204 at any time; or (563) 244–3269 weekdays between 7 a.m. and 3:30 p.m.; or Mr. Tomaz Gawronski, office (515) 263–4536 or cell phone (515) 229–2993.

Dated: December 10, 2004.

R.F. Duncan,

Rear Admiral, U.S. Coast Guard, Commander Eighth Coast Guard District.

[FR Doc. 04–27820 Filed 12–15–04; 3:56 pm]

BILLING CODE 4910–15–P

ENVIRONMENTAL PROTECTION AGENCY

40 CFR Parts 52 and 81

[R03–OAR–2004–WV–0001; FRL–7850–6]

Approval and Promulgation of Air Quality Implementation Plans; West Virginia; Withdrawal of Direct Final Rule

AGENCY: Environmental Protection Agency (EPA).

ACTION: Withdrawal of direct final rule.

SUMMARY: Due to an adverse comment, EPA is withdrawing the direct final rule to redesignate the City of Weirton PM10 nonattainment area to attainment and approval of the maintenance plan. In the direct final rule published on October 27, 2004 (69 FR 62591), we stated that if we received adverse comment by November 26, 2004, the rule would be withdrawn and not take effect. EPA subsequently received an adverse comment. EPA will address the comment received in a subsequent final action based upon the proposed action also published on October 27, 2004 (69 FR 62637). EPA will not institute a second comment period on this action.

EFFECTIVE DATE: The direct final rule is withdrawn as of December 20, 2004.

FOR FURTHER INFORMATION CONTACT: Linda Miller, (215) 814–2068, or by e-mail at *miller.linda@epa.gov.*

List of Subjects

40 CFR Part 52

Environmental protection, Air pollution control, Incorporation by reference, Particulate matter, Reporting and recordkeeping requirements.

40 CFR Part 81

Air pollution control, National parks, Wilderness areas.

Dated: December 13, 2004.

Donald S. Welsh,

Regional Administrator, Region III.

Accordingly, the addition of § 52.2520 (c)(60) and the amendment in § 81.349 to the table for ''West Virginia—PM_{10}'' revising the entry for Hancock and Brooke Counties (part): The City of Weirton are withdrawn as of December 20, 2004.

[FR Doc. 04–27664 Filed 12–17–04; 8:45 am]

BILLING CODE 6560–50–P

ENVIRONMENTAL PROTECTION AGENCY

40 CFR Part 300

[FRL–7848–7]

National Oil and Hazardous Substance Pollution Contingency Plan; National Priorities List

AGENCY: Environmental Protection Agency.

ACTION: Direct final notice of partial deletion of the Uravan Superfund Site from the National Priorities List.

SUMMARY: The Environmental Protection Agency (EPA) Region 8 is publishing a direct final notice of partial deletion of 9.84 acres within the Uravan Superfund Site (Site), located in Montrose County, Colorado, from the National Priorities List (NPL).

The NPL, promulgated pursuant to section 105 of the Comprehensive Environmental Response, Compensation, and Liability Act (CERCLA) of 1980, as amended, is appendix B of 40 CFR part 300, which is the National Oil and Hazardous Substances Pollution Contingency Plan (NCP). This direct final partial deletion is being published by EPA with the concurrence of the State of Colorado, through the Colorado Department of Public Health and the Environment because EPA has determined that all appropriate response actions, for the 9.84 acres including two historic structures, under CERCLA have been completed and, therefore, further remedial action pursuant to CERCLA is not appropriate.

DATES: This direct final deletion will be effective February 18, 2005. If adverse comments are received by January 19, 2005, EPA will publish a timely withdrawal of the direct final deletion in the **Federal Register** informing the public that the deletion will not take effect.

ADDRESSES: Comments may be mailed to: Rebecca Thomas, Remedial Project Manager (RPM), 8EPR–SR, *thomas.rebecca@epa.gov*, U.S. EPA, Region 8, 999 18th Street, Suite 300, Denver, Colorado 80202, (303) 312–6552 or 1–800–227–8917, extension 6552.

Information Repositories: Comprehensive information about the Site is available for viewing and copying at the Site information repository

located at: U.S. EPA Region 8 Records Center, 999 18th Street, Suite 300, Denver, Colorado 80202, (303) 312–6473.

FOR FURTHER INFORMATION CONTACT: Rebecca Thomas, Remedial Project Manager, 8EPR–SR, *thomas.rebecca@epa.gov*, U.S. EPA, Region 8, 999 18th Street, Suite 300, Denver, Colorado 80202, (303) 312–6552, or 1–800–toll–free.

SUPPLEMENTARY INFORMATION:

Table of Contents:

I. Introduction
II. NPL Deletion Criteria
III. Deletion Procedures
IV. Basis for Site Deletion
V. Deletion Action

I. Introduction

EPA Region 8 is publishing this direct final notice of partial deletion of 9.84 acres within the Uravan Superfund Site from the National Priorities List.

The EPA identifies sites that appear to present a significant risk to public health or the environment and maintains the NPL as the list of those sites. As described in § 300.425(e)(3) of the NCP, sites deleted from the NPL remain eligible for remedial actions if conditions at a deleted site warrant such action.

Because EPA considers this action to be noncontroversial and routine, EPA is taking it without prior publication of a notice of intent to delete. This action will be effective February 18, 2005, unless EPA receives adverse comments by January 19, 2005, on this document. If adverse comments are received within the 30 day public comment period on this document, EPA will publish a timely withdrawal of this direct final partial deletion before the effective date of the deletion and the deletion will not take effect. EPA will, as appropriate, prepare a response to comments and continue with the deletion process on the basis of the notice of intent to delete and the comments already received. There will be no additional opportunity to comment.

Section II of this document explains the criteria for deleting sites from the NPL. Section III discusses procedures that EPA is using for this action. Section IV discusses the Uravan Superfund Site and demonstrates how it meets the deletion criteria. Section V discusses EPA's action to delete the Site from the NPL unless adverse comments are received during the public comment period.

II. NPL Deletion Criteria

Section 300.425(e) of the NCP provides that releases may be deleted from the NPL where no further response is appropriate. In making a determination to delete a Site from the NPL, EPA shall consider, in consultation with the State, whether any of the following criteria have been met:

i. Responsible parties or other persons have implemented all appropriate response actions required;

ii. All appropriate Fund-financed (Hazardous Substance Superfund Response Trust Fund) response under CERCLA has been implemented, and no further response action by responsible parties is appropriate; or

iii. The remedial investigation has shown that the release poses no significant threat to public health or the environment and, therefore, the taking of remedial measures is not appropriate.

Even if a site is deleted from the NPL, where hazardous substances, pollutants, or contaminants remain at the deleted site above levels that allow for unlimited use and unrestricted exposure, CERCLA section 121(c), 42 U.S.C. 9621(c) requires that a subsequent review of the site be conducted at least every five years after the initiation of the remedial action at the deleted site to ensure that the action remains protective of public health and the environment. If new information becomes available which indicates a need for further action, EPA may initiate remedial actions. Whenever there is a significant release from a site deleted from the NPL, the deleted site may be restored to the NPL without application of the hazard ranking system.

III. Deletion Procedures

The following procedures apply to deletion of the Site:

(1) The EPA consulted with Colorado on the deletion of the Site from the NPL prior to developing this direct final notice of partial deletion.

(2) Colorado concurred with deletion of the Site from the NPL.

(3) Concurrently with the publication of this direct final notice of partial deletion, a notice of the availability of the parallel notice of intent to partially delete published today in the ''Proposed Rules'' section of the **Federal Register** is being published in a major local newspaper of general circulation at or near the Site and is being distributed to appropriate federal, state, and local government officials and other interested parties; the newspaper notice announces the 30-day public comment period concerning the notice of intent to delete the Site from the NPL.

(4) The EPA placed copies of documents supporting the deletion in the Site information repository identified above.

(5) If adverse comments are received within the 30-day public comment period on this document, EPA will publish a timely notice of withdrawal of this direct final notice of partial deletion before its effective date and will prepare a response to comments and continue with the deletion process on the basis of the notice of intent to partially delete and the comments already received.

Deletion of a site from the NPL does not itself create, alter, or revoke any individual's rights or obligations. Deletion of a site from the NPL does not in any way alter EPA's right to take enforcement actions, as appropriate. The NPL is designed primarily for informational purposes and to assist EPA management. Section 300.425(e)(3) of the NCP states that the deletion of a site from the NPL does not preclude eligibility for future response actions, should future conditions warrant such actions.

IV. Basis for Site Deletion

The following information provides EPA's rationale for partially deleting the Site from the NPL:

Site Location

The Uravan site is located in western Colorado in the western portion of Montrose County on Highway 141 approximately 13 miles northwest of the Town of Nucla. The town of Uravan was demolished during remedial activities at the site and, except for two historical structures, no longer exists. The site is located adjacent to the San Miguel River which drains into the Colorado River.

This partial deletion pertains to 9.84 acres containing two historic structures remaining on the Site, the Boarding House and the Community Center.

Site History

The Boarding House is located in the former town area of Uravan at the intersection between County Roads Y–11 and EE–22, just east of the former Uravan Mill site. The structure was built circa 1914 to provide meals and housing to employees. In 1971 housing was discontinued, and in 1982 meal service was terminated.

The Community Center is located across County Road EE–22 from the Boarding House. It was built in the mid 1930s from a sugar factory dismantled in Delta, Colorado. The building served as a multipurpose recreation center for company workers, which included a dance hall, movie theatre, church, roller skating rink, performance theatre and shooting range. Recently, the Community Center has been used to store historical artifacts that will be

displayed after the buildings are deleted from the NPL.

Site Investigation

Investigations in 1994 indicated that radon levels in the Boarding House and the Community Center were below a working level standard of 0.03 which is the alpha radiation in the atmosphere that is considered acceptable for residential structures that are being occupied full time.

A characterization study in 1995 measured both gamma radiation and soil concentrations. This study was completed to determine the feasibility of preserving the buildings and releasing them for unrestricted use. Elevated radium 226 concentrations were identified in the soils beneath and surrounding both buildings.

The Boarding House was sampled for radon in 1996. The results showed that concentrations were below a level of concern. Like the measurements collected in 1994, the survey indicated that the structures were very leaky which prevented accurate measurement of the indoor concentrations.

Elevated radon measurements were obtained from the basement in the Community Center in 1997. Also in 1997, an exploratory excavation along the east end of the Community Center was conducted to determine the depth of contaminated soil and to examine the foundation. After exposing a portion of the foundation, it was determined that the depth of contamination extended six to eight feet below the surface to a point at or slightly below the depth of the concrete footing and stem wall which supported the block walls of the basement.

Remedy Decision

The buildings contained radioactive contamination and were constructed on soils exceeding cleanup standards. To preserve the structures as an historical resource, and at the same time protect the health of the public, and to comply with applicable laws, the following remediation plan was adopted:

- Removing the most significant contamination from within the structures.
- Removing soils underlying and immediately surrounding the buildings without endangering the stability of the foundations.
- Restoring the buildings to the extent that they will be in stable structural condition.
- Remediating the soils outside the immediate vicinity of the buildings in accordance with the RAP.
- Installing a radon mitigation system in the Community Center.

Characterization of Risk

Radiation risks to members of the general public from residual radioactive materials associated with the two buildings were calculated using data generated during pre- and post-remediation site surveys. These surveys included direct gamma exposure rate measurements before and after excavation of contaminated soils around the buildings, surface contamination surveys, and laboratory analysis of soils collected from selected locations outside the buildings. In addition, the radon concentrations in air in several locations inside the buildings were measured and reported separately.

Potential risk was evaluated for three types of individuals:

- A staff person working approximately 800 hours per year,
- A volunteer working approximately 120 hours per year,
- A visitor who visits for approximately 4 hours per year.

Based on the data collected, it was concluded that there is no risk to any person from the three occupancy scenarios from gamma exposure. In the case of both the Boarding House and the Community Center, gamma exposure levels at the present time are so low that they present no incremental risk above background.

Further, based on the radon exposure data, it was concluded that the radon exposure under any of the occupant scenarios would be acceptable.

Response Actions

Radiological and non-radiological contaminants were removed from the Community Center and Boarding House starting in 1993. Excavating contaminated material from the exterior perimeter of the Boarding House and Community Center was conducted in 1998. The grading plan prescribed removing contaminated material from the perimeter of the buildings so that excavation would not adversely affect the structural stability of the foundations. The soil directly in contact with the foundations was left undisturbed and fully supported the buildings during the removal of contaminated soil. Material removal continued away from the buildings until the soil cleanup level was achieved. The depth of excavation varied from three feet to approximately 15 feet.

After the contaminated material was removed, geotextile fabric was placed over the soils remaining against the buildings to identify the contact between the undisturbed foundation support soils and the uncontaminated backfill soils.

Restoration of the exterior of the Boarding House was completed in 2000. The porch, east side concrete staircase, and landing slab were removed. Underlying contaminated soils were excavated and the area backfilled. The concrete landing was replaced and the porch and staircase were rebuilt. In general, the remedial activities conducted within and around the Boarding House and Community Center successfully removed and isolated radioactive materials. These actions have mitigated potential radiological hazards and have provided a safe environment for future uses of the structures.

An active radon mitigation system was installed in the Community Center. This system will remove radon gas from the soils beneath the basement and vent it outside by small fans. This system is designed to be operational 24 hours per day, seven days per week and has a built-in alarm system should the fans stop working.

Cleanup Standards

The cleanup standard for the historic structures is 0.03 working levels. A working level is the concentration of alpha radiation in the atmosphere that is considered acceptable for residential structures that are being occupied full time.

Operation and Maintenance

Institutional controls, in the form of an environmental covenant granted to the Colorado Department of Public Health and Environment (CDPHE), will prevent activities that might cause contact with radioactive materials on both the exterior and interior of the historic structures. The environmental covenant also requires an annual inspection of the radon mitigation system.

Five Year Review

Since waste has been left in place at concentrations that do not allow for unrestricted and unlimited use, the Environmental Protection Agency will continue to conduct Five Year Reviews of the Site. The next Five Year Review is scheduled for completion in 2005.

Community Involvement

Public participation activities have been satisfied as required in CERCLA section 113(k), 42 U.S.C. 9613(k), and CERCLA section 117, 42 U.S.C. 9617. Documents in the deletion docket which EPA relied on for recommendation of the deletion from the NPL are available to the public in the information repository.

V. Deletion Action

The EPA, with concurrence of the State of Colorado, has determined that all appropriate responses, for the 9.84 acres containing two historic structures, under CERCLA have been completed, and that no further response actions, under CERCLA, other than O&M and five-year reviews, are necessary. Therefore, EPA is partially deleting the Site from the NPL.

Because EPA considers this action to be noncontroversial and routine, EPA is taking it without prior publication. This action will be effective February 18, 2005, unless EPA receives adverse comments by January 19, 2005. If adverse comments are received within the 30-day public comment period, EPA will publish a timely withdrawal of this direct final notice of deletion before the effective date of the deletion and it will not take effect and, EPA will prepare a response to comments and continue with the deletion process on the basis of the notice of intent to delete and the comments already received. There will be no additional opportunity to comment.

List of Subjects in 40 CFR Part 300

Environmental protection, Air pollution control, Chemicals, Hazardous Waste, Hazardous substances, Intergovernmental relations, Penalties, Reporting and recordkeeping requirements, Superfund, Water pollution control, Water supply.

Dated: December 6, 2004.

Max Dodson,

Acting Regional Administrator, Region 8.

■ For the reasons set out in this document, 40 CFR part 300 is amended as follows:

PART 300—[AMENDED]

■ 1. The authority citation for part 300 continues to read as follows:

Authority: 33 U.S.C. 1321(c)(2); 42 U.S.C. 9601–9657; E.O.12777, 56 FR 54757, 3 CFR, 1991 Comp., p.351, E.O. 12580, 52 FR 2923, 3 CFR, 1987 Comp., p.193.

Appendix B—[Amended]

■ 2. Table 1 of Appendix B to Part 300 is amended by revising the entry for ''Uravan'' by adding a note ''P'' so that it reads as follows:

TABLE 1.—GENERAL SUPERFUND SECTION

State	Site name	City/county	Notes(a)
CO	Uravan Uranium Project (Union Carbide).	Uravan ...	P

(a) * * *
* * * * *
P = Sites with partial deletion(s).

[FR Doc. 04–27551 Filed 12–17–04; 8:45 am]

BILLING CODE 6560–50–P

FEDERAL MARITIME COMMISSION

46 CFR Part 531

[Docket No. 04–12]

RIN 3072–AC30

Non-Vessel-Operating Common Carrier Service Arrangements

AGENCY: Federal Maritime Commission.

ACTION: Final rule.

SUMMARY: The Federal Maritime Commission is exempting non-vessel-operating common carriers from the tariff publication requirements of the Shipping Act of 1984, subject to certain filing and publication conditions placed on these Non-Vessel-Operating Common Carrier Service Arrangements or ''NSAs.'' This final rule: Revises the rule as proposed to allow affiliates of NSA signatories to have access to service, and to provide service under an NSA; corrects typographical errors and an internal reference; and deletes a portion of Form FMC–78 that affects only internal agency use.

DATES: Effective January 19, 2005.

FOR FURTHER INFORMATION CONTACT:
Amy W. Larson, General Counsel, Federal Maritime Commission, 800 N. Capitol St., NW., Washington, DC 20573–0001, (202) 523–5740, *generalcounsel@fmc.gov*;
Austin L. Schmitt, Director of Operations, Federal Maritime Commission, 800 N. Capitol St., NW., Washington, DC 20573–0001, (202) 523–0988.

SUPPLEMENTARY INFORMATION: On October 28, 2004, the Federal Maritime Commission (''FMC'' or ''Commission'') issued a notice of proposed rulemaking (''NPR'') pursuant to its authority under section 16 of the Shipping Act of 1984 (''Shipping Act''), 46 U.S.C. app. § 1715, to exempt non-vessel-operating common carriers (''NVOCCs'') from the tariff publication requirements of the Shipping Act, subject to certain conditions. 69 FR 63981 (Nov. 3, 2004). Interested persons were given until November 19, 2004, to comment on the NPR. This deadline was later extended to November 30, 2004 in response to a request from the U.S. Department of Justice (''DOJ'').

The Commission received comments on the NPR from: Transoceanic Shipping Co., Inc. and Jagremar Marine, Inc. (''Transoceanic''); NVOCC Committee of China Association of Shipping Agency (''CASA''); the American Institute for Shippers' Associations, Inc. (''AISA''); the National Customs Brokers and Forwarders Association of America, Inc. (''NCBFAA''); the North Atlantic Alliance Association, Inc. (''NAAA''); the Fashion Accessories Shippers Association, Inc. (''FASA''); the Pacific Coast Tariff Bureau (''PCTB''); the International Shippers' Association (''ISA''); DOJ; [1] and joint comments from the National Industrial Transportation League, United Parcel Service, Inc., BAX Global, Inc., Transportation Intermediaries Association, Fedex Trade Networks Transport and Brokerage, Inc., C.H. Robinson Worldwide, Inc., and BDP International, Inc. (''Joint Commenters'').

The exemption as proposed would allow individual NVOCCs to offer NVOCC Service Arrangements (''NSAs'') to NSA shippers, provided that such NSAs are filed with the Commission and their essential terms are published in the NVOCC's tariff. The proposed rule defined an NSA as ''a written contract, other than a bill of lading or receipt, between one or more NSA shippers and an individual NVOCC in which the NSA shipper makes a commitment to provide a certain minimum quantity or portion of its cargo or freight revenue over a fixed time period, and the NVOCC commits to a certain rate or rate schedule and a defined service level.'' 69 FR at 63990. The proposed rule defined an ''NSA shipper'' as a cargo owner, the person for whose account the ocean transportation is provided, the person to whom delivery is to be made, or a shippers' association. *Id.* This proposed definition, however, specifically did not include NVOCCs or shippers' associations with NVOCC members. *Id.*

[1] DOJ filed its comments on December 3, 2004, along with a motion requesting leave to submit its comments past the deadline. We agree with DOJ's assertion that the public interest will be served and no prejudice will result, and have accepted the late filing.

Commenters generally support the rule as proposed and urge the Commission to act expeditiously to provide the relief it represents. AISA at 1; NCBFAA at 1, 4; ISA at 2; DOJ at 2; Joint Commenters at 1; Transoceanic at 1. *But see* FASA at 2 (rule is not within agency's authority). The Joint Commenters believe the rule as proposed represents ''a progressive solution which will be beneficial at all levels of the U.S. ocean transportation industry.'' Joint Commenters at 3. The Joint Commenters also urge the Commission not to delay the implementation of the exemption now to further consider how conditions other than those already proposed might ensure that competition is not substantially harmed. They assert that if the conditions imposed on the exemption as proposed later prove to be ''unnecessarily burdensome, or [that a] less onerous means of achieving the same end can be fashioned, the Commission could consider subsequent adjustments.'' *Id.* at 2. DOJ states that the ''proposal would promote competition in ocean transportation.'' DOJ at 2.

I. Antitrust Immunity for NSA Activity and Substantial Reduction in Competition

The NPR explained the Commission's rationale for limiting the exemption to NSAs offered by an individual NVOCC acting as carrier and a non-NVOCC shipper as follows. Courts may interpret the coordinated activity of multiple NVOCCs offering NSAs, and of NSAs between one NVOCC acting as a carrier and one NVOCC acting as a shipper, as immune from the antitrust laws under section 7(a)(2) of the Shipping Act, 46 U.S.C. app. 1706(a)(2). 69 FR 63986–63987. Section 16 of the Shipping Act, 46 U.S.C. app. 1715, gives the Commission the authority to make rules exempting regulated entities from the requirements of the Shipping Act only if it finds the exemption will not result in substantial reduction in competition or detriment to commerce. *Id.* The Commission determined that, in order to ensure that the exemption as proposed will not result in a substantial reduction in competition, it must limit the exemption to individual NVOCCs acting in their capacity as carriers. This is the case because antitrust immunity under section 7(a)(2), along with a lack of regulatory oversight, could substantially reduce competition.

Several commenters disagree with this finding. They argue that no such reduction in competition will occur because, unlike those of vessel-operating common carriers (''VOCCs'') or marine terminal operators (''MTOs''), the concerted activities of NVOCCs are not entitled to immunity from the antitrust laws by any provision of the Shipping Act. They regard the Commission's concern that the holding of *United States* v. *Tucor*, 189 F.2d 834 (9th Cir. 1999) may have this effect as misplaced because *Tucor* is either incorrect or inapposite to the analysis of immunity granted by section 7(a)(2), 46 U.S.C. app. 1706(a)(2). AISA at 13–14; NCBFAA at 5; ISA at 6–9; DOJ at 2–3; *compare*, FASA at 4–5. Furthermore, commenters assert that not only would such activity be subject to the regulatory oversight of DOJ under the antitrust laws, it would also be subject to Commission oversight under section 10(c) of the Shipping Act (*e.g.*, 46 U.S.C. app. 1709(c)(1)–(5)). Joint Commenters at n.1; FASA at 3.

Three commenters argue that the Commission should allow groups of NVOCCs to offer NSAs as carriers and to enter into NSAs as shippers because there is no way that such action could result in substantial harm to competition. NCBFAA at 5; NAAA at 8; ISA at 8, 9, 11. Similarly, three commenters specifically argue that shippers' associations with NVOCC members should be able to enter into NSAs as shippers. ISA at 8–12; NAAA at 8; AISA at 15–16. AISA makes several arguments to support this position: the Commission does not have the authority to regulate the membership of shippers' associations; DOJ's safe harbor guidelines for shippers' associations are sufficient; restricting shippers' associations' uses of NSAs would be an ''arbitrary and capricious'' policy; and such a limitation would reduce competition. AISA at 1, 5–10, 11, 15–16. ISA requests that, if the Commission finds it cannot allow NVOCCs to act as shippers, it should make an exception limited to household goods NVOCC shippers' associations. ISA at 14. FASA, on the other hand, believes the Commission is correct to be concerned about the competitive impact of NVOCC collusion because there are NVOCCs that hold enormous market power and could ''easily engage in discriminatory tactics against target [beneficial cargo owner shippers'] associations.'' FASA at 4.

The Commission agrees with the commenters that the rationale of *Tucor* is incorrect and that its direct precedential value is limited to section 7(a)(4) of the Shipping Act, 46 U.S.C. 1706(a)(4).[2] However, other tribunals may find *Tucor*'s analysis of section 7(a)(4), which the court read in isolation from the balance of the statute, analogous to section 7(a)(2), 46 U.S.C. app. 1706(a)(2). This is true because a court could regard an NSA-related activity as an activity within the scope of the Shipping Act undertaken with a reasonable basis to conclude that it is ''exempt from any publication * * * requirement *of this Act.*'' 46 U.S.C. app. 1706(a)(2)(B)(emphasis added). Such a judicial interpretation would result in a vacuum of regulatory oversight over anti-competitive arrangements undertaken under the cloak of an NSA. While we would disagree with it, we must consider the likelihood of such an outcome in light of *Tucor.*

We agree with FASA that competing NVOCCs acting together clearly have the ability to affect competition.[3] By agreeing to jointly offer an NSA to a shipper, they would collectively fix a price for their services, *i.e.*, a horizontal price-fixing agreement. The Commission's concern with NVOCCs acting as shippers in NSAs, either individually or collectively through shippers' associations, may be price fixing by NVOCCs who resell the service they are jointly purchasing to end-users (beneficial cargo interest shippers).[4] The under-20% market share threshold of the DOJ ''safe harbor'' provisions for joint purchasing agreements by itself does not appear to completely cover NVOCC shippers' associations as it may beneficial cargo interest shippers' associations. *See*, Antitrust Division Response to Request for Business Review Letter—Household Goods Forwarders Association of America, Inc. September 19, 1985, B.R.L. 85–21, 1985 WL 71889 (DOJ) (unopposed because there was no collective rate making or discussions and because the negotiation of rates for services in a market substantially controlled by the group expressly was not authorized). In any case, if activity under an NSA is immunized from the antitrust laws, DOJ's policy guidance on shippers' associations would become inapplicable.

There is nothing in the text of the Shipping Act to prevent the concurrent jurisdiction of the Commission under section 10(c) of the Shipping Act and

[2] The Commission's views on the inapplicability of Shipping Act antitrust immunity to service contracts between VOCCs and NVOCCs is reflected in the committee report on the bill that became the Ocean Shipping Reform Act of 1998. *See*, Report of the Committee on Commerce, Science and Transportation on S.414, S.Rep. No. 105–61 at 20 (July 31, 1997). *See also*, FASA at 5.

[3] In order to do the same, VOCCs must file agreements with the Commission, which are available for public review and comment.

[4] Horizontal price fixing might also be accomplished in an NSA where the carrier NVOCC and the shipper NVOCC are also competitors.

the agencies responsible for enforcement of the general antitrust laws over NSAs. However, if NSA activities are judged immune from the antitrust laws under section 7(a)(2) of the Shipping Act, there appears to be no prohibition in section 10(c) specifically applicable to NSAs to address price-fixing or market division, activities which are almost universally accepted as the most egregious types of anticompetitive behavior. Therefore, even if the Commission were to find that the provisions of section 10(c) applied generally to NVOCC collective activity, because a court might find NVOCCs immune from the antitrust statutes, there may be no regulation of such patently anticompetitive arrangements if they are undertaken through an NSA.

Accordingly, the Commission has determined at this time not to extend the definition of NSAs to include arrangements between two NVOCCs, whether individually or acting in concert through a shippers' association, due to the potential that they may include activities considered *per se* anti-competitive under the Sherman Act, 15 U.S.C. § 1. The lack of oversight over the competitive impacts of activities undertaken through NSAs may lead to the substantial reduction in competition that section 16 prohibits. As such, the Commission finds that at this time it must limit the exemption as set forth in the proposed rule. However, in accordance with the recommendations of the Joint Commenters, as we gain further experience regarding the practical effects of the exemption, and as the courts assess the scope of the antitrust immunity the Shipping Act grants, the Commission will continue to consider whether there are other means to ensure NSAs meet the criteria of section 16.

II. Affiliates' Access to NSAs

The Joint Commenters and CASA believe the Commission should allow affiliated NVOCCs to jointly offer NSAs. Joint Commenters at 3; CASA at 1–2. PCTB and CASA similarly argues that shippers' affiliates should be able to have access to NSAs negotiated by a related entity. PCTB at 3–4; CASA at 1–2. The Joint Commenters point out that the Supreme Court has held that the coordinated activities of a parent and its wholly-owned subsidiary must be viewed as a single entity for purposes of restraint of trade analysis under section 1 of the Sherman Act. *Copperweld Corp.* v. *Independence Tube Corp.*, 467 U.S. 752 (1984).

We agree that the analysis of *Copperweld* with respect to competition under the antitrust laws and the Commission's service contract rules with respect to competitive analysis under the Shipping Act are appropriately applied to the Commission's approach to NSAs, and therefore have decided to allow the participation of affiliates to the NSA signatory parties. The Commission accordingly: (1) Revises the proposed rule's requirements for NSAs at section 531.6(b)(9); (2) revises the definition of ''NSA'' (Final Rule at section 531.3(p)); and (3) adds a definition of ''affiliate'' (Final Rule at section 531.3(b)), based on the language proposed by the Joint Commenters. Joint Commenters at 3–4.

Proposed section 531.6(b)(9) is revised as follows:

> The legal names and business addresses of the NSA parties; the legal names of all affiliates of the NSA shipper entitled to access the NSA; the names, titles and addresses of the representatives signing the NSA for the parties, except that in the case of an NSA entered into by a shippers' association, individual members need not be named unless the contract includes or excludes specific members; and the date upon which the NSA was signed. Subsequent references in the NSA to the signatory parties shall be consistent with the first reference. An NVOCC party which enters into an NSA that includes affiliates must either:
>
> (i) list the affiliates' business addresses; or
>
> (ii) certify that this information will be provided to the Commission upon request within ten (10) business days of such request.

Similarly, the Commission adds the following definition of ''affiliate'' in section 531.3(b): ''*Affiliate*'' means two or more entities which are under common ownership or control by reason of being parent and subsidiary or entities associated with, under common control with, or otherwise related to each other through common stock ownership or common directors or officers.

The Final Rule revises the definition of NSA (section 531.3(o) as proposed; section 531.3(p) in the Final Rule), as follows:

> *NVOCC Service Arrangement* (''NSA'') means a written contract, other than a bill of lading or receipt, between one or more NSA shippers and an individual NVOCC or two or more affiliated NVOCCs, in which the NSA shipper makes a commitment to provide a certain minimum quantity or portion of its cargo or freight revenue over a fixed time period, and the NVOCC commits to a certain rate or rate schedule and a defined service level. The NSA may also specify provisions in the event of nonperformance on the part of any party.

Finally, the definition of ''NSA shipper'' as it appeared in the proposed rule contained a typographical error. The Final Rule corrects this error and eliminates the article ''a'' appearing before ''shippers' associations.'' The definition section in 531.3(o) as final reads, ''*NSA shipper* means a cargo owner, the person for whose account the ocean transportation is provided, the person to whom delivery is to be made, or a shippers' association. The term does not include NVOCCs or shippers' associations whose membership includes NVOCCs.''

III. Other Matters

NCBFAA and DOJ argue that the exemption should be broadened to exempt all NVOCCs from all tariff publication requirements without condition because such requirements are unnecessary. NCBFAA at 2,6; DOJ at 2. The Commission, NCBFAA argues, has never explained how these conditions will protect competition and improperly relies on the eliminated ''ability to regulate'' criterion. NCBFAA at 6. NCBFAA argues that the proposed rule's view that the filed rate doctrine is no longer ''sacrosanct'' is correct; NSA rates would be ''applicable'' or ''legal'' even if not filed with the Commission. NCBFAA at 8–10.

Either eliminating the tariff publication requirement completely and/or eliminating the condition of the exemption that all NSAs be filed with the Commission and their essential terms be published could substantially impact the competition between large NVOCCs and VOCCs (who continue to be required to publish their tariffs, file service contracts and publish service contract essential terms) by continuing to impose costs on one while relieving costs for the other. We anticipate NVOCCs who offer NSAs may wish to use their tariffs in much the same way as VOCCs do for service contracts, as a convenient place to house generally-applicable provisions.

PCTB questions whether the Commission intended to allow NSAs to make reference to tariff publications of NVOCCs other than that offering the NSA. PCTB at 4–5. We agree with PCTB that doing so would likely be confusing to shippers and we revise section 531.6(c)(2) of the Final Rule accordingly. The Commission will endeavor, as PCTB has requested, to post ''frequently asked questions'' regarding NSAs on its Web site.

Finally, the Final Rule makes several typographical corrections. It corrects the facsimile number to which registrants may file Forms FMC–78 in section 531.5(d)(1) and the Instructions for Form FMC–78. It corrects the internal reference to cancellations in section 531.8(d)(2). The line for indicating the initially assigned password appearing in

the ''FMC use only'' portion of Form FMC–78 has been eliminated.

IV. Statutory Reviews

In accordance with the Paperwork Reduction Act, 44 U.S.C. 3507, the Commission has submitted estimated burdens of collection of information authorized by this Final Rule to the Office of Management and Budget (''OMB''). The estimated total annual burden for the estimated 110 annual respondents is 165,932 manhours. No comments were received on this estimate.

In accordance with the Regulatory Flexibility Act, 5 U.S.C. 605, the Chairman of the Federal Maritime Commission has certified to the Chief Counsel for Advocacy, Small Business Administration, that the Final Rule will not have a significant impact on a substantial number of small entities. Although NVOCCs as an industry include small entities, the Final Rule provides, but does not require, an alternative for NVOCCs, from the otherwise applicable tariff publication requirements of the Shipping Act and the Commission's regulations. It potentially relieves a burden. Therefore, the Commission has found that the Final Rule will have no significant economic impact on a substantial number of small entities.

List of Subjects in 46 CFR Part 531

Exports, Non-vessel-operating common carriers, Ocean transportation intermediaries.

■ Accordingly, the Federal Maritime Commission adds 46 CFR part 531 as follows:

PART 531—NVOCC SERVICE ARRANGEMENTS

Subpart A—General Provisions

Sec.
531.1 Purpose.
531.2 Scope and applicability.
531.3 Definitions.
531.4 Confidentiality.
531.5 Duty to file.

Subpart B—Filing Requirements

531.6 NVOCC Service Arrangements.
531.7 Notices.
531.8 Amendment, correction, cancellation, and electronic transmission errors.

Subpart C—Publication of Essential Terms

531.9 Publication.

Subpart D—Exceptions and Implementation

531.10 Excepted and exempted commodities.
531.11 Implementation.

Subpart E—Recordkeeping and Audit

531.12 Recordkeeping and audit.
531.13–531.98 [Reserved]
531.99 OMB control numbers assigned pursuant to the Paperwork Reduction Act.
Appendix A to Part 531—Instructions for the Filing of NVOCC Service Arrangements
Exhibit 1 to Part 531—NVOCC Service Arrangement Registration [FORM FMC–78]

Authority: 46 U.S.C. app. 1715.

Subpart A—General Provisions

§ 531.1 Purpose.

This part exempts NVOCCs from certain provisions of the Shipping Act. The purpose of this part is to facilitate the filing of NVOCC Service Arrangements (''NSAs'') and the publication of certain essential terms of those NSAs as they are exempt from the otherwise applicable provisions of the Shipping Act of 1984 (''Act''). This part enables the Commission to review NSAs to ensure that they and the parties to them comport with the conditions of the exemption as set forth below.

§ 531.2 Scope and applicability.

Only individual NVOCCs compliant with the requirements of section 19 of the Act and the Commission's regulations at 46 CFR part 515 may enter into an NSA with one or more NSA shippers subject to the requirements of these rules. Any NVOCC who has failed to maintain its bond or license or had its tariff suspended or cancelled by the Commission is ineligible to offer and file NSAs.

§ 531.3 Definitions.

When used in this part:

(a) *Act* means the Shipping Act of 1984 as amended by the Ocean Shipping Reform Act of 1998;

(b) *Affiliate* means two or more entities which are under common ownership or control by reason of being parent and subsidiary or entities associated with, under common control with, or otherwise related to each other through common stock ownership or common directors or officers.

(c) *Amendment* means any change to a filed NSA which has prospective effect and which is mutually agreed upon by all parties to the NSA.

(d) *Authorized person* means an NVOCC or duly appointed agent who is authorized to file NSAs on behalf of the NVOCC and to publish the corresponding statement of essential terms and is registered by the Commission to file under § 531.5 and Appendix A to this part.

(e) *BTA* means the Commission's Bureau of Trade Analysis, or its successor bureau.

(f) *BCL* means the Commission's Bureau of Certification and Licensing, or its successor bureau.

(g) *Cancellation* means an event which is unanticipated by the NSA, in liquidated damages or otherwise, and is due to the failure of the NSA shipper to tender minimum cargo as set forth in the contract, unless such tender was made impossible by an action of the NVOCC.

(h) *Commission* or *FMC* means the Federal Maritime Commission.

(i) *Common carrier* means a person holding itself out to the general public to provide transportation by water of passengers or cargo between the United States and a foreign country for compensation that:

(1) Assumes responsibility for the transportation from the port or point of receipt to the port or point of destination; and

(2) Utilizes, for all or part of that transportation, a vessel operating on the high seas or the Great Lakes between a port in the United States and a port in a foreign country, except that the term does not include a common carrier engaged in ocean transportation by ferry boat, ocean tramp, or chemical parcel tanker, or by a vessel when primarily engaged in the carriage of perishable agricultural commodities:

(i) If the common carrier and the owner of those commodities are wholly owned, directly or indirectly, by a person primarily engaged in the marketing and distribution of those commodities and

(ii) Only with respect to those commodities.

(j) *Correction* means any change to a filed NSA that has retroactive effect.

(k) *Effective date* means the date upon which an NSA or amendment is scheduled to go into effect by the parties to the NSA. An NSA or amendment becomes effective at 12:01 a.m. Eastern Standard Time on the beginning of the effective date. The effective date cannot be prior to the filing date of the NSA or amendment with the Commission.

(l) *Expiration date* means the last day after which the entire NSA is no longer in effect.

(m) *File* or *filing* (of NSAs or amendments thereto) means the use of the Commission's electronic filing system for receipt of an NSA or an amendment thereto by the Commission, consistent with the method set forth in Appendix A of this part, and the recording of its receipt by the Commission.

(n) *OIT* means the Commission's Office of Information Technology, or its successor office.

(o) *NSA shipper* means a cargo owner, the person for whose account the ocean transportation is provided, the person to whom delivery is to be made, or a shippers' association. The term does not include NVOCCs or shippers' associations whose membership includes NVOCCs.

(p) *NVOCC Service Arrangement* (''NSA'') means a written contract, other than a bill of lading or receipt, between one or more NSA shippers and an individual NVOCC or two or more affiliated NVOCCs, in which the NSA shipper makes a commitment to provide a certain minimum quantity or portion of its cargo or freight revenue over a fixed time period, and the NVOCC commits to a certain rate or rate schedule and a defined service level. The NSA may also specify provisions in the event of nonperformance on the part of any party.

(q) *Statement of essential terms* means a concise statement of the essential terms of an NSA required to be published under this part.

§ 531.4 Confidentiality.

(a) All NSAs and amendments to NSAs filed with the Commission shall, to the fullest extent permitted by law, be held in confidence by the Commission.

(b) Nothing contained in this part shall preclude the Commission from providing certain information from or access to NSAs to another agency of the Federal government of the United States.

(c) Parties to a filed NSA may agree to disclose information contained in it. Breach of any confidentiality agreement contained in an NSA by either party will not, on its own, be considered a violation of these rules.

§ 531.5 Duty to file.

(a) The duty under this part to file NSAs, amendments and notices, and to publish statements of essential terms, shall be upon the NVOCC party to the NSA.

(b) The Commission shall not order any person to pay the difference between the amount billed and agreed upon in writing with a common carrier or its agent and the amount set forth in an NSA by that common carrier for the transportation service provided.

(c) Filing may be accomplished by any duly agreed-upon agent, as the parties to the NSA may designate, and subject to conditions as the parties may agree.

(d) *Registration*—(1) *Application.* Authority to file or delegate the authority to file must be requested by a responsible official of the NVOCC in writing by submitting to BTA, either by mail to 800 N. Capitol Street, NW., Washington, DC 20573, or by facsimile to (202) 523–5867, a completed NSA Registration Form (FMC–78)(Exhibit 1 to this part).

(2) *Approved registrations.* OIT shall provide approved Registrants a log-on identification number (''I.D.'') and password for filing and amending NSAs, and notify Registrants of such approval via U.S. mail.

Subpart B—Filing Requirements

§ 531.6 NVOCC Service Arrangements.

(a) Authorized persons shall file with BTA, in the manner set forth in Appendix A of this part, a true and complete copy of every NSA or amendment before any cargo moves pursuant to that NSA or amendment.

(b) Every NSA filed with the Commission shall include the complete terms of the NSA including, but not limited to, the following:

(1) The origin port ranges in the case of port-to-port movements and geographic areas in the case of through intermodal movements;

(2) The destination port ranges in the case of port-to-port movements and geographic areas in the case of through intermodal movements;

(3) The commodity or commodities involved;

(4) The minimum volume or portion;

(5) The service commitments;

(6) The line-haul rate;

(7) Liquidated damages for non-performance (if any);

(8) Duration, including the

(i) Effective date; and

(ii) Expiration date;

(9) The legal names and business addresses of the NSA parties; the legal names of all affiliates of the NSA shipper entitled to access the NSA; the names, titles and addresses of the representatives signing the NSA for the parties, except that in the case of an NSA entered into by a shippers' association, individual members need not be named unless the contract includes or excludes specific members; and the date upon which the NSA was signed. Subsequent references in the NSA to the signatory parties shall be consistent with the first reference. An NVOCC party which enters into an NSA that includes affiliates must either:

(i) list the affiliates' business addresses; or

(ii) certify that this information will be provided to the Commission upon request within ten (10) business days of such request.

(10) A description of the shipment records which will be maintained to support the NSA and the address, telephone number, and title of the person who will respond to a request by making shipment records available to the Commission for inspection under §531.12 of this part; and

(11) All other provisions of the NSA.

(c) *Certainty of terms.* The terms described in paragraph (b) of this section may not:

(1) Be uncertain, vague or ambiguous; or

(2) Make reference to terms not explicitly contained in the NSA itself unless those terms are contained in a publication widely available to the public and well known within the industry. Reference may not be made to a tariff of a common carrier other than the NVOCC party to the NSA.

(d) *Other requirements.* (1) For service pursuant to an NSA, no NVOCC may, either alone or in conjunction with any other person, directly or indirectly, provide service in the liner trade that is not in accordance with the rates, charges, classifications, rules and practices contained in a filed NSA.

(2) For service pursuant to an NSA, no NVOCC, may, either alone or in conjunction with any other person, directly or indirectly, engage in any unfair or unjustly discriminatory practice in the matter of rates or charges with respect to any port; and

(3) For service under an NSA, no NVOCC may, either alone or in conjunction with any other person, directly or indirectly, give any undue or unreasonable preference or advantage or impose any undue or unreasonable prejudice or disadvantage with respect to any port.

(e) *Format requirements.* Every NSA filed with BTA shall include, as set forth in Appendix A to this part:

(1) A unique NSA number of more than one (1) but less than ten (10) alphanumeric characters in length (''NSA Number''); and

(2) A consecutively numbered amendment number no more than three digits in length, with initial NSAs using ''0'' (''Amendment number''); and

(3) An indication of the method by which the statement of essential terms will be published.

(f) *Exception in case of malfunction of Commission electronic filing system.*

(1) In the event that the Commission's electronic filing system is not functioning and cannot receive NSAs filings for twenty-four (24) continuous hours or more, affected parties will not be subject to the requirements of paragraph (a) of this section and §531.11 that an NSA be filed before cargo is shipped under it.

(2) However, NSAs which go into effect before they are filed due to a

malfunction of the Commission's electronic filing system pursuant to paragraph (f)(1) of this section, must be filed within twenty-four (24) hours of the Commission's electronic filing system's return to service.

(3) For an NSA that is effective without filing due to a malfunction of the Commission's filing system, failure to file that NSA within twenty-four (24) hours of the Commission's electronic filing system's return to service will be considered a violation of these regulations.

(g) Failure to comply with the provisions of this section shall result in the application of the terms of the otherwise applicable tariff.

§ 531.7 Notices.

Within thirty (30) days of the occurrence of any event listed below, there shall be filed with the Commission, pursuant to the same procedures as those followed for the filing of an amendment pursuant to §531.5 and Appendix A to this part, a detailed notice of:

(a) Correction;

(b) Cancellation;

(c) Adjustment of accounts, by re-rating, liquidated damages, or otherwise;

(d) Final settlement of any account adjusted as described in paragraph (c) of this section; and

(e) Any change to the name, legal name and/or business address of any NSA party.

§ 531.8 Amendment, correction, cancellation, and electronic transmission errors.

(a) *Amendment.*

(1) NSAs may be amended by mutual agreement of the parties. Amendments shall be filed electronically with the Commission in the manner set forth in §531.5 and Appendix A to this part.

(i) Where feasible, NSAs should be amended by amending only the affected specific term(s) or subterms.

(ii) Each time any part of an NSA is amended, the filer shall assign a consecutive amendment number (up to three digits), beginning with the number ''1.''

(iii) Each time any part of a filed NSA is amended, the ''Filing Date'' will be the date of filing of the amendment.

(2) [Reserved]

(b) *Correction.*

(1) Requests shall be filed, in duplicate, with the Commission's Office of the Secretary within forty-five (45) days of the NSA's filing with the Commission, accompanied by remittance of a $276 service fee.

(2) Requests shall include:

(i) A letter of transmittal explaining the purpose of the submission, and providing specific information to identify the initial or amended NSA to be corrected;

(ii) A paper copy of the proposed correct terms. Matter to be deleted shall be struck through and matter to be added shall immediately follow the language being deleted and underscored;

(iii) An affidavit from the filing party attesting with specificity to the factual circumstances surrounding the clerical or administrative error, with reference to any supporting documentation;

(iv) Documents supporting the clerical or administrative error; and

(v) A brief statement from the other party to the NSA concurring in the request for correction.

(3) If the request for correction is granted, the carrier party shall file the corrected provisions using a special case number as described in Appendix A to this part.

(c) *Electronic transmission errors.*

(1) An authorized person who experiences a purely technical electronic transmission error or a data conversion error in transmitting an NSA filing or an amendment thereto is permitted to file a Corrected Transmission (''CT'') of that filing within 48 hours of the date and time of receipt recorded in the Commission's electronic filing system (excluding Saturdays, Sundays and legal public holidays). This time-limited permission to correct an initial defective NSA filing is not to be used to make changes in the original NSA rates, terms or conditions that are otherwise provided for in §531.6(b). The CT tab box in the Commission's electronic filing system must be checked at the time of resubmitting a previously filed NSA, and a description of the corrections made must be stated at the beginning of the corrected NSA in a comment box. Failure to check the CT box and enter a description of the correction will result in the rejection of a file with the same name, as documents with duplicate file names or NSA and amendment numbers are not accepted by the FMC's electronic filing system.

(2) [Reserved]

(d) *Cancellation.* (1) An account may be adjusted for events and damages covered by the NSA. This shall include adjustment necessitated by either liability for liquidated damages appearing in the NSA as filed with the Commission under §531.6(b)(7), or the occurrence of an event described below in paragraph (d)(2) of this section.

(2) In the event of cancellation as defined in §531.3(g):

(i) Further or continued implementation of the NSA is prohibited; and

(ii) The cargo previously carried under the NSA shall be re-rated according to the otherwise applicable tariff provisions.

(e) If the amendment, correction or cancellation affects an essential term required to be published under §531.9, the statement of essential terms shall be changed as soon as possible after the filing of the amendment to accurately reflect the change to the NSA terms.

Subpart C—Publication of Essential Terms

§ 531.9 Publication.

(a) *Contents.* All authorized persons who choose to file NSAs under this part are also required to make available to the public, contemporaneously with the filing of each NSA with the Commission, and in tariff format, a concise statement of the following essential terms:

(1) The port ranges:

(i) origin; and

(ii) destination;

(2) The commodity or commodities involved;

(3) The minimum volume or portion; and

(4) The duration.

(b) *Certainty of terms.* The terms described in paragraph (a) of this section may not:

(1) Be uncertain, vague or ambiguous; or

(2) Make reference to terms not explicitly detailed in the statement of essential terms, unless those terms are contained in a publication widely available to the public and well known within the industry. Reference may not be made to a tariff of a common carrier other than the NVOCC party to the NSA.

(c) *Location.* The statement of essential terms shall be published as a separate part of the individual NVOCC's automated tariff system.

(d) *References.* The statement of essential terms shall contain a reference to the ''NSA Number'' as described in §531.6(e)(1).

(e) *Terms.* (1) The publication of the statement of essential terms shall accurately reflect the terms as filed with the Commission.

(2) If any of the published essential terms include information not required to be filed with the Commission but filed voluntarily, the statement of essential terms shall so note.

(f) *Commission listing.* The Commission will publish on its website, *www.fmc.gov*, a listing of the locations of all NSA essential terms publications.

(g) Updating statements of essential terms. To ensure that the information contained in a published statement of essential terms is current and accurate, the statement of essential terms publication shall include a prominent notice indicating the date of its most recent publication or revision. When the published statement of essential terms is affected by filed amendments, corrections, or cancellations, the current terms shall be changed and published as soon as possible in the relevant statement of essential terms.

Subpart D—Exceptions and Implementation

§ 531.10 Excepted and exempted commodities.

(a) *Statutory exceptions.* NSAs for the movement of the following, as defined in section 3 of the Act, the Commission's rules at 46 CFR 530.3 or 46 CFR 520.1, are not subject to the conditions of this exemption:

(1) Bulk cargo;

(2) Forest products;

(3) Recycled metal scrap;

(4) New assembled motor vehicles; and

(5) Waste paper or paper waste.

(b) *Commission exemptions.* The following commodities and/or services are not subject to the conditions of this exemption:

(1) *Mail in foreign commerce.* Transportation of mail between the United States and foreign countries.

(2) *Department of Defense cargo.* Transportation of U.S. Department of Defense cargo moving in foreign commerce under terms and conditions approved by the Military Transportation Management Command and published in a universal service contract. An exact copy of the universal service contract, including any amendments thereto, shall be filed with the Commission as soon as it becomes available.

(c) *Inclusion of excepted or exempted matter.*

(1) The Commission will not accept for filing NSAs which exclusively concern the commodities or services listed in paragraph (a) or (b) of this section.

(2) NSAs filed with the Commission may include the commodities or services listed in paragraph (a) or (b) of this section only if:

(i) There is a tariff of general applicability for the transportation, which contains a specific commodity rate for the commodity or service in question; or

(ii) The NSA itself sets forth a rate or charge which will be applied if the NSA is canceled, as defined in § 531.3(e) and § 531.8(d).

(d) *Waiver.* Upon filing an NSA pursuant to paragraph (c) of this section, the NSA shall be subject to the same requirements as those for NSAs generally.

§ 531.11 Implementation.

Generally. Performance under an NSA or amendment thereto may not begin before the day it is effective and filed with the Commission.

Subpart E—Recordkeeping and Audit

§ 531.12 Recordkeeping and audit.

(a) *Records retention for five years.* Every NVOCC shall maintain original signed NSAs, amendments, and their associated records in an organized, readily accessible or retrievable manner for a period of five (5) years from the termination of each NSA. These records must be kept in a form that is readily available and usable to the Commission; electronically maintained records shall be no less accessible than if they were maintained in paper form.

(b) *Production for audit within 30 days of request.* Every NVOCC shall, upon written request of the FMC's Director, Bureau of Enforcement, any Area Representative or the Director, Bureau of Trade Analysis, submit copies of requested original NSAs or their associated records within thirty (30) days of the date of the request.

§ 531.13–531.98 [Reserved]

§ 531.99 OMB control numbers assigned pursuant to the Paperwork Reduction Act.

The Commission has received OMB approval for this collection of information pursuant to the Paperwork Reduction Act of 1995, as amended. In accordance with that Act, agencies are required to display a currently valid control number. The valid control number for this collection of information is 3072–0067. The valid control number for form FMC–78 is 3072–0067.

Appendix A to Part 531—Instructions for the Filing of NSAs

NSAs shall be filed in accordance with the instructions found on the Commission's home page, *http://www.fmc.gov.*

A. Registration, Log-on I.D. and Password

To register for filing, an NVOCC or authorized agent must submit the NSA Registration Form (Form FMC–78) to BTA. A separate NSA Registration Form is required for each individual that will file NSAs. BTA will direct OIT to provide approved filers with a log-on identification number (''I.D.'') and password. Filers who would like a third party (agent/publisher) to file their NSAs must so indicate on Form FMC–78. Authority for filing can be transferred by submitting an amended registration form requesting the assignment of a new log-on I.D. and password. The original log-on ID will be canceled when a replacement log-on I.D. is issued. Log-on I.D.s and passwords may not be shared with, loaned to or used by any individual other than the individual registrant. The Commission reserves the right to disable any log-on I.D. that is shared with, loaned to or used by parties other than the registrant.

B. Filing

After receiving a log-on I.D. and a password, a filer may log-on to the NSA filing area on the Commission's home page and file NSAs. The filing screen will request such information as: filer name, organization number (''Registered Persons Index'' or ''RPI'' number); NSA and amendment number; effective date and file name. The filer will attach the entire NSA file and submit it into the system. When the NSA has been submitted for filing, the system will assign a filing date and an FMC control number, both of which will be included in the acknowledgment/confirmation message.

By the Commission.[5]

Bryant L. VanBrakle,

Secretary.

BILLING CODE 6730–01–P

[5] Commissioner Brennan issued the following statement: I strongly support the concept of allowing NVOCCs to offer confidential contracts. I voted against the draft final rule because it does not go far enough. For example, the exemption does not allow shippers' associations, which are often made up of small and medium-sized shippers, to use confidential contracts unless the association excludes an NVO member of the association.

Instructions For Form FMC-78

Completed Form FMC-78 should be sent by mail or facsimile to:

Federal Maritime Commission
Bureau of Trade Analysis
800 N. Capitol Street, NW
Washington, DC 20573-0001
Fax (202) 523-5867

Line 1. Organization Number. This is the same as the Regulated Persons Index ("RPI") Number.

Line 2. Registrant. Provide the full name of the firm or individual registering for the automated NSA filing system and any trade names. The Registrant's name should match the corporate charter or business license, etc. The Registrant's name cannot be changed without submission of an amended registration form.

Line 3. FMC License Number. Provide name of Registrant as licensed by the Commission and date of the effectiveness of that license. If Registrant is a bonded but unlicensed foreign-based NVOCC operating pursuant to Commission's regulations at 46 C.F.R. § 515.3, indicate the name and address of the agent for service of process as required by 46 C.F.R. § 515.24. The name and address of the agent for service of process must be the same as that appearing in the NVOCC's tariff, as provided by 46 C.F.R. § 520.11 (b).

Line 4. Registration. Indicate whether this is the initial (first time) registration or an amendment to an existing NSA registration.

Line 5. Address of Headquarters Office. The complete street address of the Registrant's principal place of business should be shown in addition to a post office box (if any). Post office box alone is insufficient. Provide the Registrant's Federal Taxpayer Identification Number, if any.

Line 6. Mailing Address (if different). Provide the mailing address only if it differs from the headquarters address listed in Line 5. Show the street address as well as any post office box. This is the address to which the Registrant's log-on I.D. and password will be mailed via U.S. mail. Also, if the log-on I.D. and password is to be mailed to a third party, indicate here.

Line 7. Persons to be granted registration. Provide the full name of the individual for whom the log-on I.D. and password is requested. If you wish to

transfer a log-on I.D. from an existing registration to a new individual, indicate the name of the new registrant and the log-on I.D. to be assigned.

Line 8. Registration by Third Party. Indicate, by checking the applicable box, whether the person to be granted registration in Line 7 is a third party (publisher, agent, etc.) of the registrant named in Line 1. The registration must be accompanied by an indication that the NVOCC has authorized the third party to file NVOCC service arrangements and related documents on its behalf.

Line 9. Signature of Authorized Official. Indicate the date the registration was signed and title of authorized official.

Paperwork Reduction Act Notice.

The collection of this information is authorized generally by section 16 of the Shipping Act of 1984, 46 U.S.C. app. § 1715.

This is an optional form. Submission is completely voluntary. Failure to submit this form will in no way impact the Federal Maritime Commission's assessment of your firm's financial responsibility; however, you will not be able to use the exemption set forth in the Commission's rules at 46 C.F.R. part 531.

You are not required to provide the information requested on a form that is subject to the Paperwork Reduction Act unless the form displays a valid OMB control number. The valid control number for this information collection is 3072-0067. Copies of this form will be maintained until the filer indicates s/he will no longer file NSAs into the electronic filing system.

The time needed to complete and file this form will vary depending on individual circumstances. The total estimated average time to complete this form is: Recordkeeping, 20 minutes; Learning about the form, 20 minutes; Preparing and sending the form to the FMC, 20 minutes.

If you have comments concerning the accuracy of these time estimates or suggestions for making this form simpler, we would be happy to hear from you. You can write to the Secretary, Federal Maritime Commission, 800 North Capitol Street, N.W., Washington, D.C. 20573-0001, or e-mail: secretary@fmc.gov.

EXHIBIT 1 -- NVOCC SERVICE ARRANGEMENT REGISTRATION [FORM FMC-78] **OMB No. 3072-0067(exp. date: 5/31/2005)**

FORM FMC-78

PLEASE TYPE OR PRINT

NVOCC SERVICE ARRANGEMENT REGISTRATION

(SEE ATTACHED INSTRUCTIONS)

1. Organization No.

2. Registrant

Full Legal Name of firm (or individual, if not a firm)

(Doing Business As or Trade Name)

3.a. NVOCC OTI License No. _____ **Effective date:**_____
MM/DD/YYYY

OR b. If foreign-based unlicensed NVOCC, provide the following information for agent for service of process:

Name: _____

Address: _____

4. This Registration is: [ ] Initial [ ] Amendment (Specify change)

5. Headquarters Address _____(____)_____
(Number and Street) Telephone
_____(____)_____
(Number and Street) Fax
_____
(City/State/Zip/Country) (Federal TIN Number, if any) E-Mail (optional)

6. Mailing Address (If different)

c/o name_____

Address _____

_____

Telephone (___)_____

Fax (___)_____

Email (optional) _____

7. Person(s) to be granted registration. Please list individual(s) for whom a log-on identifier is requested. If this is a transfer of log-on, please list the existing name and existing log-on ID:

Name: _____ Existing Log-on: _____

8. Is the person listed in question 7 a third party? (check one) [ ] Yes [ ] No If yes, a letter of authority must be submitted with this form.

9. _____ _____

Signature of Authorized Official Print or type name of Authorized Official

_____ _____

date (MM/DD/YYYY) Title of Authorized Official

FMC USE ONLY

Logon_____ID_____Directory_____DateAsg____/____/____AsgBy_____**11/04 (rev'd 12/04)**

[FR Doc. 04–27803 Filed 12–17–04; 8:45 am]

BILLING CODE 6730–01–C

FEDERAL COMMUNICATIONS COMMISSION

47 CFR Part 73

[DA 04–3808; MM Docket No. 01–120; RM–10126]

Radio Broadcasting Services; Lincoln and Sherman, IL

AGENCY: Federal Communications Commission.

ACTION: Final rule.

SUMMARY: This document denies a Petition for Reconsideration filed by Long Nine, Inc. directed to the *Report and Order* in this proceeding. *See* 67 FR 16652, April 8, 2002. With this action, the proceeding is terminated.

FOR FURTHER INFORMATION CONTACT: Robert Hayne, Media Bureau, (202) 418–2177.

SUPPLEMENTARY INFORMATION: This is a synopsis of the *Memorandum Opinion and Order* in MM Docket No. 01–120 adopted December 1, 2004, and released December 3, 2004. The full text of this decision is available for inspection and copying during normal business hours in the FCC Reference Information Center at Portals ll, CY–A257, 445 12th Street, SW., Washington, DC. The complete text of this decision may also be purchased from the Commission's copy contractor, Best Copy and Printing, Inc., 445 12th Street, SW., Room CY–B402, Washington, DC 20554, telephone 1–800–378–3160 or *http://www.BCPIWEB.com.* The Commission will not send a copy of this *Memorandum Opinion and Order* pursuant to the Congressional Review Act, *see* 5 U.S.C. 801(a)(1)(A), because the aforementioned petition for reconsideration was denied.

Federal Communications Commission.

John A. Karousos,

Assistant Chief, Audio Division, Media Bureau.

[FR Doc. 04–27797 Filed 12–17–04; 8:45 am]

BILLING CODE 6712–01–P

FEDERAL COMMUNICATIONS COMMISSION

47 CFR Part 73

[DA 04–3616; MM Docket No. 02–212; RM–10516, RM–10618]

Radio Broadcasting Services; Crystal Beach, TX, Lumberton, TX, Vinton, LA and Winnie, TX

AGENCY: Federal Communications Commission.

ACTION: Final rule.

SUMMARY: This document denies a Petition for Reconsideration filed by Charles Crawford directed to the *Report and Order* in this proceeding. *See* 69 FR 29241, May 21, 2004. With this action, the proceeding is terminated.

FOR FURTHER INFORMATION CONTACT: Robert Hayne, Media Bureau, (202) 418–2177.

SUPPLEMENTARY INFORMATION: This is a synopsis of the *Memorandum Opinion and Order* in MM Docket No.02–212 adopted November 24, 2004, and released November 26, 2004. The full text of this decision is available for inspection and copying during normal business hours in the FCC Reference Information Center at Portals ll, CY–A257, 445 12th Street, SW., Washington, DC. The complete text of this decision may also be purchased from the Commission's copy contractor, Best Copy and Printing, Inc., 445 12th Street, SW., Room CY–B402, Washington, DC 20554, telephone 1–800–378–3160 or *http://www.BCPIWEB.com.* The Commission will not send a copy of this *Memorandum Opinion and Order* pursuant to the Congressional Review Act, *see* 5 U.S.C. 801(a)(1)(A), because the petition was reconsideration was denied.

Federal Communications Commission.

John A. Karousos,

Assistant Chief, Audio Division, Media Bureau.

[FR Doc. 04–27796 Filed 12–17–04; 8:45 am]

BILLING CODE 6712–01–P

FEDERAL COMMUNICATIONS COMMISSION

47 CFR Part 73

[DA 04–3809; MB Docket No. 04–67; RM–10856]

Radio Broadcasting Services; Easthampton, MA; Malta, NY; and Pittsfield, MA

AGENCY: Federal Communications Commission.

ACTION: Final rule.

SUMMARY: In response to a *Notice of Proposed Rule Making,* 69 FR 16202 (March 29, 2004) this *Report and Order* upgrades Channel 289A, Station WNYQ(FM), Malta, New York, to Channel 289B1; reallots Channel 288A, Station WBEC–FM, Pittsfield, Massachusetts, to Easthampton, Massachusetts; and modifies Station WBEC–FM's license accordingly. The coordinates for Channel 289B1 at Malta, New York, are 42–58–17 NL and 73–40–52 WL, with a site restriction of 9.1 kilometers (5.7 miles) east of Malta. The coordinates for Channel 288A at Easthampton, Massachusetts, are 42–18–52 NL and 72–41–18 WL, with a site restriction of 5.5 kilometers (3.4 miles) north of Easthampton.

DATES: Effective January 18, 2005.

FOR FURTHER INFORMATION CONTACT: R. Barthen Gorman, Media Bureau, (202) 418–2180.

SUPPLEMENTARY INFORMATION: This is a synopsis of the Commission's *Report and Order,* MB Docket No. 04–67, adopted December 1, 2004, and released December 3, 2004. The full text of this Commission decision is available for inspection and copying during normal business hours in the FCC's Reference Information Center at Portals II, 445 12th Street, SW., Room CY–A257, Washington, DC, 20554. The document may also be purchased from the Commission's duplicating contractor, Best Copy and Printing, Inc., Portals II, 445 12th Street, SW., Room CY–B402, Washington, DC, 20554, telephone 1–800–378–3160 or *http://www.BCPIWEB.com.* The Commission will send a copy of the *Report and Order* in a report to be sent to Congress and the General Accounting Office pursuant to the Congressional Review Act, *see* 5 U.S.C. 801(a)(1)(A).

List of Subjects in 47 CFR Part 73

Radio, Radio broadcasting.

■ Part 73 of Title 47 of the Code of Federal Regulations is amended as follows:

PART 73—RADIO BROADCASTING SERVICES

■ 1. The authority citation for Part 73 reads as follows:

Authority: 47 U.S.C. 154, 303, 334, and 336.

§ 73.202 [Amended]

■ 2. Section 73.202(b), the Table of FM Allotments under Massachusetts, is amended by removing Channel 288A at Pittsfield, and adding Easthampton, Channel 288A.

■ 3. Section 73.202(b), the Table of FM Allotments under New York, is amended by removing Channel 289A and by adding Channel 289B1 at Malta.

Federal Communications Commission.

John A. Karousos,

Assistant Chief, Audio Division, Media Bureau.

[FR Doc. 04–27795 Filed 12–17–04; 8:45 am]

BILLING CODE 6712–01–P

FEDERAL COMMUNICATIONS COMMISSION

47 CFR Part 73

[DA 04–3704; MB Docket No. 04–338, RM–11061]

Radio Broadcasting Service; Nevada City, CA

AGENCY: Federal Communications Commission.

ACTION: Final rule.

SUMMARY: The Audio Division, at the request of Dana J. Puopolo, allots Channel 297A at Nevada City, California, as the community's first FM commercial broadcast service. *See* 69 FR 54612, published September 9, 2004. Channel 297A can be allotted to Nevada City in compliance with the Commission's minimum distance separation requirements, provided there is a site restriction of 4.5 kilometers (2.8 miles) north of the community. The reference coordinates for Channel 297A at Nevada City are 39–18–00 North Latitude and 121–00–00 West Longitude. A filing window for Channel 297A at Nevada City, California will not be opened at this time. Instead, the issue of opening a filing window for this channel will be addressed by the Commission in a subsequent order.

DATES: Effective January 18, 2005.

ADDRESSES: Federal Communications Commission, 445 Twelfth Street, SW., Washington, DC 20554.

FOR FURTHER INFORMATION CONTACT: Helen McLean, Media Bureau, (202) 418–2738.

SUPPLEMENTARY INFORMATION: This is a synopsis of the Commission's *Report and Order,* MB Docket No. 04–338, adopted December 1, 2004, and released December 3, 2004. The full text of this Commission decision is available for inspection and copying during regular business hours at the FCC's Reference Information Center, Portals II, 445 Twelfth Street, SW., Room CY–A257, Washington, DC 20554. The complete text of this decision may also be purchased from the Commission's duplicating contractor, Best Copy and Printing, Inc., 445 12th Street, SW., Room CY–B402, Washington, DC 20554, telephone 1–800–378–3160 or *http://www.BCPIWEB.com.* The Commission will send a copy of this *Report and Order* in a report to be sent to Congress and the General Accounting Office pursuant to the Congressional Review Act, *see* 5 U.S.C. 801(a)(1)(A).

List of Subjects in 47 CFR Part 73

Radio, Radio broadcasting.

PART 73—RADIO BROADCAST SERVICES

■ 1. The authority citation for part 73 continues to read as follows:

Authority: 47 U.S.C. 154, 303, 334 and 336.

§ 73.202 [Amended]

■ 2. Section 73.202(b), the Table of FM Allotments under California, is amended by adding Nevada City, Channel 297A.

Federal Communications Commission.

John A. Karousos,

Assistant Chief, Audio Division, Media Bureau.

[FR Doc. 04–27793 Filed 12–17–04; 8:45 am]

BILLING CODE 6712–01–P

FEDERAL COMMUNICATIONS COMMISSION

47 CFR Part 73

[DA 04–3814; MB Docket No. 04–214; RM–10992]

Radio Broadcasting Services; Jackson, WY

AGENCY: Federal Communications Commission.

ACTION: Final rule.

SUMMARY: In response to a *Notice of Proposed Rule Making,* 69 FR 35564 (June 25, 2004), this *Report and Order* dismisses the Petition for Rule Making in MB Docket No. 04–214 proposing to allot Channel 249A at Jackson, Wyoming. No expression of interest was filed in this proposal.

FOR FURTHER INFORMATION CONTACT: Victoria M. McCauley, Media Bureau (202) 418–2180.

SUPPLEMENTARY INFORMATION: This is a synopsis of the Commission's Report and Order, MB Docket No. 04–214, adopted December 1, 2004, and released December 3, 2004. The full text of this Commission decision is available for inspection and copying during normal business hours in the FCC's Reference Information Center at Portals II, 445 12th Street, SW., Room CY–A257, Washington, DC 20554. The document may also be purchased from the Commission's duplicating contractor, Best Copy and Printing, Inc., Portals II, 445 12th Street, SW., Room CY–B402, Washington, DC 20554, telephone 1–800–378–3160 or *http://www.BCPIWEB.com.* This document is not subject to the Congressional Review Act. (The Commission, is, therefore, not required to submit a copy of this Report and Order to GAO, pursuant to the Congressional Review Act, *see* 5 U.S.C. 801(a)(1)(A) because the proposed rule was dismissed, herein.)

Federal Communications Commission.

John A. Karousos,

Assistant Chief, Audio Division, Media Bureau.

[FR Doc. 04–27792 Filed 12–17–04; 8:45 am]

BILLING CODE 6712–01–P

FEDERAL COMMUNICATIONS COMMISSION

47 CFR Part 73

[DA 04–3705; MB Docket No. 04–220, RM–10861]

Radio Broadcasting Services; Clayton and Raton, NM

AGENCY: Federal Communications Commission.

ACTION: Final rule.

SUMMARY: The Audio Division, at the request of Clayton Community Broadcasters, allots Channel 248C1 to Clayton, New Mexico, as its second FM commercial aural broadcast service. *See* 69 FR 35563, June 25, 2004. To accommodate the Clayton allotment, we are deleting Channel 248C1 at Raton, New Mexico because there was no expression of interest in the allotment. Channel 248C1 can be allotted to Clayton in compliance with the Commission's spacing requirements without a site restriction at coordinates 36–27–00 NL and 103–10–54 WL. A filing window for Channel 248C1 at Clayton, New Mexico, will not be opened at this time. Instead, the issue of opening a filing window for this channel will be addressed by the Commission in a subsequent order.

DATES: Effective January 18, 2005.

ADDRESSES: Federal Communications Commission, 445 Twelfth Street, SW., Washington, DC 20554.

FOR FURTHER INFORMATION CONTACT: Rolanda F. Smith, Media Bureau, (202) 418–2180.

SUPPLEMENTARY INFORMATION: This is a synopsis of the Commission's *Report and Order,* MB Docket No. 04–220, adopted December 1, 2004, and released

December 3, 2004. The full text of this Commission decision is available for inspection and copying during regular business hours at the FCC's Reference Information Center, Portals II, 445 Twelfth Street, SW., Room CY–A257, Washington, DC 20554. The complete text of this decision may also be purchased from the Commission's duplicating contractor, Best Copy and Printing, Inc., 445 12th Street, SW., Room CY–B402, Washington, DC 20054, telephone 1–800–378–3160 or *http://www.BCPIWEB.com.* The Commission will send a copy of this *Report and Order* in a report to be sent to Congress and the General Accounting Office pursuant to the Congressional Review Act, *see* 5 U.S.C. 801(a)(1)(A).

List of Subjects in 47 CFR Part 73

Radio, Radio broadcasting.

PART 73—RADIO BROADCAST SERVICES

■ 1. The authority citation for part 73 continues to read as follows:

Authority: 47 U.S.C. 154, 303, 334 and 336.

§ 73.202 [Amended]

■ 2. Section 73.202(b), the Table of FM Allotments under New Mexico, is amended by adding Channel 248C1 at Clayton and by removing Channel 248C1 at Raton.

Federal Communications Commission.

John A. Karousos,

Assistant Chief, Audio Division, Media Bureau.

[FR Doc. 04–27798 Filed 12–17–04; 8:45 am]

BILLING CODE 6712–01–P

DEPARTMENT OF COMMERCE

National Oceanic and Atmospheric Administration

50 CFR Part 229

[Docket No. 030221039–4351–16; I.D. 121304B]

Taking of Marine Mammals Incidental to Commercial Fishing Operations; Atlantic Large Whale Take Reduction Plan (ALWTRP)

AGENCY: National Marine Fisheries Service (NMFS), National Oceanic and Atmospheric Administration (NOAA), Commerce.

ACTION: Temporary rule.

SUMMARY: The Assistant Administrator for Fisheries (AA), NOAA, announces temporary restrictions consistent with the requirements of the Atlantic Large Whale Take Reduction Plan's (ALWTRP's) implementing regulations. These regulations apply to lobster trap/pot and anchored gillnet fishermen in an area totaling approximately 1,889 square nautical miles (nm^2) (6,479.1 km^2), east of Portland, ME for 15 days. The purpose of this action is to provide protection to an aggregation of North Atlantic right whales (right whales).

DATES: Effective beginning at 0001 hours December 22, 2004, through 2400 hours January 5, 2005.

ADDRESSES: Copies of the proposed and final Dynamic Area Management (DAM) rules, Environmental Assessments (EAs), Atlantic Large Whale Take Reduction Team (ALWTRT) meeting summaries, and progress reports on implementation of the ALWTRP may also be obtained by writing Diane Borggaard, NMFS/Northeast Region, One Blackburn Drive, Gloucester, MA 01930.

FOR FURTHER INFORMATION CONTACT: Diane Borggaard, NMFS/Northeast Region, 978–281–9328 x6503; or Kristy Long, NMFS, Office of Protected Resources, 301–713–1401.

SUPPLEMENTARY INFORMATION:

Electronic Access

Several of the background documents for the ALWTRP and the take reduction planning process can be downloaded from the ALWTRP web site at *http://www.nero.noaa.gov/whaletrp/*.

Background

The ALWTRP was developed pursuant to section 118 of the Marine Mammal Protection Act (MMPA) to reduce the incidental mortality and serious injury of three endangered species of whales (right, fin, and humpback) as well as to provide conservation benefits to a fourth non-endangered species (minke) due to incidental interaction with commercial fishing activities. The ALWTRP, implemented through regulations codified at 50 CFR 229.32, relies on a combination of fishing gear modifications and time/area closures to reduce the risk of whales becoming entangled in commercial fishing gear (and potentially suffering serious injury or mortality as a result).

On January 9, 2002, NMFS published the final rule to implement the ALWTRP's DAM program (67 FR 1133). On August 26, 2003, NMFS amended the regulations by publishing a final rule, which specifically identified gear modifications that may be allowed in a DAM zone (68 FR 51195). The DAM program provides specific authority for NMFS to restrict temporarily on an expedited basis the use of lobster trap/pot and anchored gillnet fishing gear in areas north of 40° N. lat. to protect right whales. Under the DAM program, NMFS may: (1) require the removal of all lobster trap/pot and anchored gillnet fishing gear for a 15–day period; (2) allow lobster trap/pot and anchored gillnet fishing within a DAM zone with gear modifications determined by NMFS to sufficiently reduce the risk of entanglement; and/or (3) issue an alert to fishermen requesting the voluntary removal of all lobster trap/pot and anchored gillnet gear for a 15–day period and asking fishermen not to set any additional gear in the DAM zone during the 15–day period.

A DAM zone is triggered when NMFS receives a reliable report from a qualified individual of three or more right whales sighted within an area (75 nm^2 (139 km^2)) such that right whale density is equal to or greater than 0.04 right whales per nm^2 (1.85 km^2). A qualified individual is an individual ascertained by NMFS to be reasonably able, through training or experience, to identify a right whale. Such individuals include, but are not limited to, NMFS staff, U.S. Coast Guard and Navy personnel trained in whale identification, scientific research survey personnel, whale watch operators and naturalists, and mariners trained in whale species identification through disentanglement training or some other training program deemed adequate by NMFS. A reliable report would be a credible right whale sighting.

On December 6, 2004, an aerial survey reported a sighting of 7 right whales in the proximity 43°22.3′ N lat. and 68°01.1′ W long. This position lies east of Portland, ME. After conducting an investigation, NMFS ascertained that the report came from a qualified individual and determined that the report was reliable. Thus, NMFS has received a reliable report from a qualified individual of the requisite right whale density to trigger the DAM provisions of the ALWTRP.

Once a DAM zone is triggered, NMFS determines whether to impose restrictions on fishing and/or fishing gear in the zone. This determination is based on the following factors, including but not limited to: the location of the DAM zone with respect to other fishery closure areas, weather conditions as they relate to the safety of human life at sea, the type and amount of gear already present in the area, and a review of recent right whale entanglement and mortality data.

NMFS has reviewed the factors and management options noted above relative to the DAM under

consideration. As a result of this review, NMFS prohibits lobster trap/pot and anchored gillnet gear in this area during the 15–day restricted period unless it is modified in the manner described in this temporary rule. The DAM zone is bounded by the following coordinates:

43°45′N, 68°32′W (NW Corner)

43°45′N, 67°30′W

43°33′N, 67°30′W following the Hague line south to

43°00′N, 67°42′W

43°00′N, 68°32′W

In addition to those gear modifications currently implemented under the ALWTRP at 50 CFR 229.32, the following gear modifications are required in the DAM zone. If the requirements and exceptions for gear modification in the DAM zone, as described below, differ from other ALWTRP requirements for any overlapping areas and times, then the more restrictive requirements will apply in the DAM zone. Special note for gillnet fisherman: A portion of this DAM zone overlaps with the Harbor Porpoise Take Reduction Plan's Offshore Closure Area. This DAM action does not supersede the Harbor Porpoise Take Reduction Plan regulations found at 50 CFR 229.33.

Lobster Trap/Pot Gear

Fishermen utilizing lobster trap/pot gear within the portion of the Northern Nearshore Lobster Waters that overlap with the DAM zone are required to utilize all of the following gear modifications while the DAM zone is in effect:

1. Groundlines must be made of either sinking or neutrally buoyant line. Floating groundlines are prohibited;

2. All buoy lines must be made of either sinking or neutrally buoyant line, except the bottom portion of the line, which may be a section of floating line not to exceed one-third the overall length of the buoy line;

3. Fishermen are allowed to use two buoy lines per trawl; and

4. A weak link with a maximum breaking strength of 600 lb (272.4 kg) must be placed at all buoys.

Fishermen utilizing lobster trap/pot gear within the portion of the Offshore Lobster Waters Area that overlap with the DAM zone are required to utilize all of the following gear modifications while the DAM zone is in effect:

1. Groundlines must be made of either sinking or neutrally buoyant line. Floating groundlines are prohibited;

2. All buoy lines must be made of either sinking or neutrally buoyant line, except the bottom portion of the line, which may be a section of floating line not to exceed one-third the overall length of the buoy line;

3. Fishermen are allowed to use two buoy lines per trawl; and

4. A weak link with a maximum breaking strength of 1,500 lb (680.4 kg) must be placed at all buoys.

Anchored Gillnet Gear

Fishermen utilizing anchored gillnet gear within the portion of the Other Northeast Gillnet Waters that overlap with the DAM zone are required to utilize all the following gear modifications while the DAM zone is in effect:

1. Groundlines must be made of either sinking or neutrally buoyant line. Floating groundlines are prohibited;

2. All buoy lines must be made of either sinking or neutrally buoyant line, except the bottom portion of the line, which may be a section of floating line not to exceed one-third the overall length of the buoy line;

3. Fishermen are allowed to use two buoy lines per string;

4. Each net panel must have a total of five weak links with a maximum breaking strength of 1,100 lb (498.8 kg). Net panels are typically 50 fathoms (91.4 m) in length, but the weak link requirements would apply to all variations in panel size. These weak links must include three floatline weak links. The placement of the weak links on the floatline must be: one at the center of the net panel and one each as close as possible to each of the bridle ends of the net panel. The remaining two weak links must be placed in the center of each of the up and down lines at the panel ends; and

5. All anchored gillnets, regardless of the number of net panels, must be securely anchored with the holding power of at least a 22 lb (10.0 kg) Danforth-style anchor at each end of the net string.

The restrictions will be in effect beginning at 0001 hours December 22, 2004, through 2400 hours January 5, 2005, unless terminated sooner or extended by NMFS through another notification in the **Federal Register**.

The restrictions will be announced to state officials, fishermen, ALWTRT members, and other interested parties through e-mail, phone contact, NOAA website, and other appropriate media immediately upon filing with the **Federal Register**.

Classification

In accordance with section 118(f)(9) of the MMPA, the Assistant Administrator (AA) for Fisheries has determined that this action is necessary to implement a take reduction plan to protect North Atlantic right whales.

Environmental Assessments for the DAM program were prepared on December 28, 2001, and August 6, 2003. This action falls within the scope of the analyses of these EAs, which are available from the agency upon request.

NMFS provided prior notice and an opportunity for public comment on the regulations establishing the criteria and procedures for implementing a DAM zone. Providing prior notice and opportunity for comment on this action, pursuant to those regulations, would be impracticable because it would prevent NMFS from executing its functions to protect and reduce serious injury and mortality of endangered right whales. The regulations establishing the DAM program are designed to enable the agency to help protect unexpected concentrations of right whales. In order to meet the goals of the DAM program, the agency needs to be able to create a DAM zone and implement restrictions on fishing gear as soon as possible once the criteria are triggered and NMFS determines that a DAM restricted zone is appropriate. If NMFS were to provide prior notice and an opportunity for public comment upon the creation of a DAM restricted zone, the aggregated right whales would be vulnerable to entanglement which could result in serious injury and mortality. Additionally, the right whales would most likely move on to another location before NMFS could implement the restrictions designed to protect them, thereby rendering the action obsolete. Therefore, pursuant to 5 U.S.C. 553(b)(B), the AA finds that good cause exists to waive prior notice and an opportunity to comment on this action to implement a DAM restricted zone to reduce the risk of entanglement of endangered right whales in commercial lobster trap/pot and anchored gillnet gear as such procedures would be impracticable.

For the same reasons, the AA finds that, under 5 U.S.C. 553(d)(3), good cause exists to waive the 30–day delay in effective date. If NMFS were to delay for 30 days the effective date of this action, the aggregated right whales would be vulnerable to entanglement, which could cause serious injury and mortality. Additionally, right whales would likely move to another location between the time NMFS approved the action creating the DAM restricted zone and the time it went into effect, thereby rendering the action obsolete and ineffective. Nevertheless, NMFS recognizes the need for fishermen to have time to either modify or remove (if not in compliance with the required

restrictions) their gear from a DAM zone once one is approved. Thus, NMFS makes this action effective 2 days after the date of publication of this notice in the **Federal Register**. NMFS will also endeavor to provide notice of this action to fishermen through other means as soon as the AA approves it, thereby providing approximately 3 additional days of notice while the Office of the Federal Register processes the document for publication.

NMFS determined that the regulations establishing the DAM program and actions such as this one taken pursuant to those regulations are consistent to the maximum extent practicable with the enforceable policies of the approved coastal management program of the U.S. Atlantic coastal states. This determination was submitted for review by the responsible state agencies under section 307 of the Coastal Zone Management Act. Following state review of the regulations creating the DAM program, no state disagreed with NMFS' conclusion that the DAM program is consistent to the maximum extent practicable with the enforceable policies of the approved coastal management program for that state.

The DAM program under which NMFS is taking this action contains policies with federalism implications warranting preparation of a federalism assessment under Executive Order 13132. Accordingly, in October 2001 and March 2003, the Assistant Secretary for Intergovernmental and Legislative Affairs, DOC, provided notice of the DAM program and its amendments to the appropriate elected officials in states to be affected by actions taken pursuant to the DAM program. Federalism issues raised by state officials were addressed in the final rules implementing the DAM program. A copy of the federalism Summary Impact Statement for the final rules is available upon request (**ADDRESSES**).

The rule implementing the DAM program has been determined to be not significant under Executive Order 12866.

Authority: 16 U.S.C. 1361 *et seq.* and 50 CFR 229.32(g)(3)

Dated: December 14, 2004.

Rebecca Lent,

Deputy Assistant Administrator for Regulatory programs, National Marine Fisheries Service.

[FR Doc. 04–27695 Filed 12–14–04; 4:47 pm]

BILLING CODE 3510–22–S

DEPARTMENT OF COMMERCE

National Oceanic and Atmospheric Administration

50 CFR Part 648

[Docket No. 031119283–4001–02; I.D. 121404B]

Fisheries of the Northeastern United States; Summer Flounder Fishery; Commercial Quota Harvested for New York

AGENCY: National Marine Fisheries Service (NMFS), National Oceanic and Atmospheric Administration (NOAA), Commerce.

ACTION: Closure of commercial fishery.

SUMMARY: NMFS announces that the summer flounder commercial quota available to New York has been harvested. Vessels issued a commercial Federal fisheries permit for the summer flounder fishery may not land summer flounder in New York for the remainder of calendar year 2004, unless additional quota becomes available through a transfer. Regulations governing the summer flounder fishery require publication of this notification to advise New York that the quota has been harvested and to advise vessel permit holders and dealer permit holders that no commercial quota is available for landing summer flounder in New York.

DATES: Effective 0001 hours, December 19, 2004, through 2400 hours, December 31, 2004.

FOR FURTHER INFORMATION CONTACT: Jason Blackburn, Fishery Management Specialist, (978) 281–9326.

SUPPLEMENTARY INFORMATION: Regulations governing the summer flounder fishery are found at 50 CFR part 648. The regulations require annual specification of a commercial quota that is apportioned on a percentage basis among the coastal states from North Carolina through Maine. The process to set the annual commercial quota and the percent allocated to each state is described in § 648.100.

The initial total commercial quota for summer flounder for the 2004 calendar year was set equal to 16,920,000 lb (7,674,862 kg)(69 FR 2074, January 14, 2004). The percent allocated to vessels landing summer flounder in New York is 7.64699 percent, resulting in a commercial quota of 1,293,871 lb (586,896 kg). The 2004 allocation was reduced to 1,285,853 lb (583,259 kg) due to research set-aside.

Section 648.101(b) requires the Administrator, Northeast Region, NMFS (Regional Administrator) to monitor state commercial quotas and to determine when a state's commercial quota has been harvested. NMFS then publishes a notification in the **Federal Register** to advise the state and to notify Federal vessel and dealer permit holders that, effective upon a specific date, the state's commercial quota has been harvested and no commercial quota is available for landing summer flounder in that state. The Regional Administrator has determined, based upon dealer reports and other available information, that New York has harvested its quota for 2004.

The regulations at § 648.4(b) provide that Federal permit holders agree, as a condition of the permit, not to land summer flounder in any state that the Regional Administrator has determined no longer has commercial quota available. Therefore, effective 0001 hours, December 19, 2004, further landings of summer flounder in New York by vessels holding summer flounder commercial Federal fisheries permits are prohibited for the remainder of the 2004 calendar year, unless additional quota becomes available through a transfer and is announced in the **Federal Register**. Effective 0001 hours, December 19, 2004, federally permitted dealers are also notified that they may not purchase summer flounder from federally permitted vessels that land in New York for the remainder of the calendar year, or until additional quota becomes available through a transfer.

Classification

This action is required by 50 CFR part 648 and is exempt from review under E.O. 12866.

Authority: 16 U.S.C. 1801 *et seq.*

Dated: December 14, 2004.

Alan D. Risenhoover,

Acting Director, Office of Sustainable Fisheries, National Marine Fisheries Service.

[FR Doc. 04–27734 Filed 12–15–04; 1:46 pm]

BILLING CODE 3510–22–S

DEPARTMENT OF COMMERCE

National Oceanic and Atmospheric Administration

50 CFR Part 679

[Docket No. 040907255–4343–02; I.D. 082704E]

RIN 0648–AS41

Fisheries of the Exclusive Economic Zone Off Alaska; Revision of Steller Sea Lion Protection Measures for the Pollock and Pacific Cod Fisheries in the Gulf of Alaska

AGENCY: National Marine Fisheries Service (NMFS), National Oceanic and Atmospheric Administration (NOAA), Commerce.

ACTION: Final rule.

SUMMARY: NMFS publishes a final rule that revises Steller sea lion protection measures for the pollock and Pacific cod fisheries in the Gulf of Alaska (GOA). The revisions adjust Pacific cod and pollock fishing closure areas near four Steller sea lion haulouts and modify the seasonal management of pollock harvest in the GOA. The intent of the revisions is to maintain protection for Steller sea lions and their critical habitat while easing the economic burden on GOA fishing communities. This action is intended to promote the goals and objectives of the Magnuson-Stevens Fishery Conservation and Management Act (Magnuson-Stevens Act), the Fishery Management Plan for Groundfish of the Gulf of Alaska (FMP), and other applicable laws.

DATES: Effective January 19, 2005.

ADDRESSES: Copies of the Environmental Assessment/Regulatory Impact Review (EA/RIR) prepared for the rule and copies of the 2000 and 2001 Biological Opinions, and the June 19, 2003 supplement to the 2001 Biological Opinion, on the effects of the groundfish fisheries on Steller sea lions may be obtained from NMFS, Alaska Region, P.O. Box 21668, Juneau, AK 99802, Attn: Lori Durall, or from the NMFS Alaska Region website at *www.fakr.noaa.gov*.

FOR FURTHER INFORMATION CONTACT: Melanie Brown, 907–586–7228 or *melanie.brown@noaa.gov*.

SUPPLEMENTARY INFORMATION: The groundfish fisheries in the Exclusive Economic Zone of the GOA are managed under the FMP. The North Pacific Fishery Management Council (Council) prepared the FMP under the authority of the Magnuson-Stevens Act, 16 U.S.C. 1801, *et seq.* Regulations implementing the FMP appear at 50 CFR part 679. General regulations governing U.S. fisheries also appear at 50 CFR part 600.

Background

The western distinct population segment (DPS) of Steller sea lions has been listed as endangered under the Endangered Species Act (ESA), and critical habitat has been designated for this DPS (50 CFR 226.202). Temporal and spatial harvest restrictions were established for the groundfish fisheries of Alaska (68 FR 204, January 2, 2003) to protect Steller sea lions from jeopardy of extinction and their critical habitat from adverse modification or destruction from the effects of these fisheries. Pollock and Pacific cod are important prey species for Steller sea lions, and these protection measures apply to the pollock and Pacific cod fisheries in the GOA.

In June 2004, the Council unanimously recommended revisions to the Steller sea lion protection measures in the GOA to alleviate some of the economic burden on coastal communities while maintaining protection for Steller sea lions and their critical habitat. These revisions adjust pollock and Pacific cod fishing closures near four Steller sea lion haulouts and revise seasonal management of pollock harvest. NMFS concluded that fishing under the proposed revisions is not likely to affect Steller sea lions or their critical habitat beyond those effects already considered in the 2000 FMP Biological Opinion (BiOp), the 2001 BiOp on the Steller sea lion protection measures, and the June 19, 2003 supplement to the 2001 BiOp (see **ADDRESSES**). NMFS has determined that this action could provide some economic relief to participants in the pollock and Pacific cod fisheries while maintaining protection for Steller sea lions and their critical habitat.

The proposed rule for this action was published in the **Federal Register** on September 21, 2004 (69 FR 56384) with a comment period ending October 21, 2004. The details of each regulatory revision are contained in the proposed rule for this action. No changes were made from the proposed rule in the final rule.

Comments and Responses

Three emails and two letters containing seven separate comments were received regarding the proposed rule. The comments are summarized and responded to below.

Comment 1: The commercial fishers are taking all of the fish so the Steller sea lions have nothing to eat. The commercial fishers should be thrown out of the GOA.

Response: Several species of groundfish, notably pollock and Pacific cod, are important prey species for Steller sea lions in the GOA and are also targeted by the GOA groundfish fisheries. The pollock and Pacific cod fisheries potentially compete with Steller sea lions by reducing the availability of prey for foraging sea lions. However, this potential competition between commercial fishers and Steller sea lions for pollock and Pacific cod is addressed by regulations that limit the total amount of catch and impose temporal and spatial controls on harvest. These Steller sea lion protection measures are designed to preserve prey abundance and availability for foraging sea lions.

Comment 2: The fishers are catching double what they are reporting, and no one checks that what they have on board is what they are reporting. When checked, the amount of fish on board is usually double what they have reported. Vessels should be seized, and the captain and crew should be jailed for a year for abusing the sacred trust to responsibly harvest groundfish.

Response: NMFS disagrees with the commentor's assertion that groundfish fishers systematically under-report their catch. The recordkeeping and reporting requirements in these fisheries are comprehensive, and NMFS and United States Coast Guard law enforcement officers conduct numerous vessel boardings each year. Reporting violations occur, but they are relatively rare and are prosecuted pursuant to the Magnuson-Stevens Act.

Comment 3: Quotas should be cut by 50 percent the first year and 10 percent each year after. Overfishing is occurring. Marine sanctuaries should be established.

Response: This action revises certain Steller sea lion protection measures in the GOA, but does not specify groundfish harvest levels. The specification of harvest levels is done by separate rulemaking during the harvest specifications process. NMFS encourages the commentor to submit comments on the proposed 2005 and 2006 fishery specifications when they are published in the **Federal Register** for public comment. However, NMFS disagrees with the commentor's assertion that overfishing is occurring in the groundfish fisheries. NMFS manages these fisheries on a sustainable basis and notes that none of the groundfish stocks off Alaska is overfished. Additionally, this action does not address the creation of marine sanctuaries. The January 2004 draft

environmental impact statement for essential fish habitat discusses the effects of fishing on sensitive habitat features and evaluates a range of options for minimizing adverse effects, such as closing areas of rockfish habitat to bottom trawling. Further information on this draft EIS may be found at the NMFS Alaska Region website at *www.fakr.noaa.gov*.

Comment 4: The Pew Foundation reports on overfishing and regional fishery management council bias and the United Nations report on overfishing are incorporated into the comments from this commentor.

Response: This action raises no issues related to overfishing or the membership of regional fishery management councils. The commentor's specific concerns and their relationship to these reports are not presented by the commentor. Because no further details are provided by the commentor, NMFS is unable to respond further to this comment.

Comment 5: The Council's decision to reduce Steller sea lion protection measures is an outrage. The protection measures were made years ago solely for the protection of Steller sea lions. To make changes now for the benefit of the fishing fleet is an outrage because the Steller sea lions are still listed as endangered. Policy was made and should be followed and not changed for the industry's benefit.

Response: NMFS disagrees with the commentor's assertion that this action fails to protect Steller sea lions and their critical habitat. The Steller sea lion protection measures were expected to be periodically reviewed and potentially changed based on new information regarding Steller sea lions and the fishing industry. NMFS has worked with the Council to identify impacts on the industry and new information that may lead to adapting the protection measures to ensure efficient and safe groundfish harvest while protecting Steller sea lions and their critical habitat. NMFS has determined that by revising the Pacific cod and pollock closure areas and improving the seasonal management of pollock with this final rule, the protection measures continue to protect Steller sea lions and their critical habitat from the potential effects of the pollock and Pacific cod fisheries.

Comment 6: Revisions to ESA protection measures should come from sound, scientific, factual evidence. The basis of any revisions should not be on ''informal consultations,'' on findings of ''not likely to adversely affect,'' or on ''could provide economic relief.'' NMFS should reconsider all of the proposed changes.

Response: NMFS agrees that agency decisions should be based on the best available scientific information. NMFS has used the best available scientific information in the development of this action and has reasonably determined that the revised measures adequately protect Steller sea lions and their critical habitat. Unfortunately, the best available scientific information frequently does not provide unequivocal answers regarding the effects of fisheries on the environment. NMFS has no additional information to justify reconsidering this action.

Comment 7: We support the proposed action. Revising the Steller sea lion protection measures will alleviate some economic burden on GOA communities and maintain protection for Steller sea lions. We hope the changes may be made in time for the 2005 fishing year.

Response: NMFS acknowledges the commentors' interest in alleviating economic burdens on GOA communities while maintaining protection for Steller sea lions and has strived to implement this final rule by early 2005.

Classification

This rule has been determined to be not significant for the purposes of Executive Order 12866.

The Chief Counsel for Regulation of the Department of Commerce certified to the Chief Counsel for Advocacy of the Small Business Administration during the proposed rule stage that this action would not have a significant economic impact on a substantial number of small entities. No comments were received regarding this certification. As a result, a regulatory flexibility analysis was not required and none prepared.

Small Entity Compliance Guide

This action revises 50 CFR part 679 which describes the Steller sea lion protection measures for the Alaska groundfish fisheries. This action requires small entities in the pollock and Pacific cod fisheries to comply with the amended closure areas near four Steller sea lion haulouts. To facilitate compliance with all of the Steller sea lion protection area restrictions, NMFS provides a series of maps showing the closure areas and links to the regulations that may be viewed and downloaded at *http://www.fakr.noaa.gov/sustainablefisheries/2003hrvstspecssl.htm*.

List of Subjects in 50 CFR Part 679

Alaska, Fisheries, Recordkeeping and reporting requirements.

Dated: December 13, 2004.

Rebecca Lent,

Deputy Assistant Administrator for Regulatory Programs, National Marine Fisheries Service.

■ For reasons set out in the preamble, 50 CFR part 679 is amended as follows:

PART 679—FISHERIES OF THE EXCLUSIVE ECONOMIC ZONE OFF ALASKA

■ 1. The authority citation for part 679 continues to read as follows:

Authority: Authority: 16 U.S.C. 773 *et seq.*, 1801 *et seq.*, and 3631 *et seq.*; 16 U.S.C. 1540(f); Pub. L. 105–277, Title II of Division C; Pub. L. 106–31, Sec. 3027; Pub. L.106–554, Sec. 209; and Pub. L. 108–199, Sec. 803.

■ 2. In § 679.20, paragraph (a)(5)(iii)(B) is revised to read as follows:

§ 679.20 General limitations.

* * * * *

(a) * * *

(5) * * *

(iii) * * *

(B) *GOA Western and Central Regulatory Areas seasonal apportionments.* Each apportionment established under paragraph (a)(5)(iii)(A) of this section will be divided into four seasonal apportionments corresponding to the four fishing seasons set out at § 679.23(d)(2) as follows: A Season, 25 percent; B Season, 25 percent; C Season, 25 percent; and D Season, 25 percent. Within any fishing year, underharvest or overharvest of a seasonal apportionment may be added to or subtracted from remaining seasonal apportionments in a manner to be determined by the Regional Administrator, provided that any revised seasonal apportionment does not exceed 20 percent of the seasonal TAC apportionment for the statistical area. The reapportionment of underharvest will be applied to the subsequent season within the same statistical area up to the 20 percent limit specified in this paragraph. Any underharvest remaining beyond the 20 percent limit may be further apportioned to the subsequent season in the other statistical areas, in proportion to estimated biomass and in an amount no more than 20 percent of the seasonal TAC apportionment for the statistical area.

* * * * *

■ 3. In § 679.23, paragraphs (d)(2)(i) and (d)(2)(iii) are revised to read as follows:

§ 679.23 Seasons.

* * * * *

(d) * * *

(2) * * *

(i) *A season.* From 1200 hours, A.l.t., January 20 through 1200 hours, A.l.t., March 10;

* * * * *

(iii) *C season.* From 1200 hours, A.l.t., August 25 through 1200 hours, A.l.t., October 1; and

* * * * *

■ 4. Tables 4 and 5 to part 679 are revised to read as follows:

TABLE 4 TO 50 CFR PART 679 STELLER SEA LION PROTECTION AREAS POLLOCK FISHERIES RESTRICTIONS

Column Number 1	2	3	4	5	6	7
Site Name	Area or Sub-area	Boundaries from Latitude	Boundaries from Longitude	Boundaries to[1] Latitude	Boundaries to[1] Longitude	Pollock No-fishing Zones for Trawl Gear[2,8] (nm)
St. Lawrence I./S Punuk I.	Bering Sea	63 04.00 N	168 51.00 W			20
St. Lawrence I./SW Cape	Bering Sea	63 18.00 N	171 26.00 W			20
Hall I.	Bering Sea	60 37.00 N	173 00.00 W			20
St. Paul I./Sea Lion Rock	Bering Sea	57 06.00 N	170 17.50 W			3
St. Paul I./NE Pt.	Bering Sea	57 15.00 N	170 06.50 W			3
Walrus I. (Pribilofs)	Bering Sea	57 11.00 N	169 56.00 W			10
St. George I./Dalnoi Pt.	Bering Sea	56 36.00 N	169 46.00 W			3
St. George I./S Rookery	Bering Sea	56 33.50 N	169 40.00 W			3
Cape Newenham	Bering Sea	58 39.00 N	162 10.50 W			20
Round (Walrus Islands)	Bering Sea	58 36.00 N	159 58.00 W			20
Attu I./Cape Wrangell	Aleutian I.	52 54.60 N	172 27.90 E	52 55.40 N	172 27.20 E	20
Agattu I./Gillon Pt.	Aleutian I.	52 24.13 N	173 21.31 E			20
Attu I./Chirikof Pt.	Aleutian I.	52 49.75 N	173 26.00 E			20
Agattu I./Cape Sabak	Aleutian I.	52 22.50 N	173 43.30 E	52 21.80 N	173 41.40 E	20
Alaid I.	Aleutian I.	52 46.50 N	173 51.50 E	52 45.00 N	173 56.50 E	20
Shemya I.	Aleutian I.	52 44.00 N	174 08.70 E			20
Buldir I.	Aleutian I.	52 20.25 N	175 54.03 E	52 20.38 N	175 53.85 E	20
Kiska I./Cape St. Stephen	Aleutian I.	51 52.50 N	177 12.70 E	51 53.50 N	177 12.00 E	20
Kiska I./Sobaka & Vega	Aleutian I.	51 49.50 N	177 19.00 E	51 48.50 N	177 20.50 E	20
Kiska I./Lief Cove	Aleutian I.	51 57.16 N	177 20.41 E	51 57.24 N	177 20.53 E	20
Kiska I./Sirius Pt.	Aleutian I.	52 08.50 N	177 36.50 E			20
Tanadak I. (Kiska)	Aleutian I.	51 56.80 N	177 46.80 E			20
Segula I.	Aleutian I.	51 59.90 N	178 05.80 E	52 03.06 N	178 08.80 E	20
Ayugadak Point	Aleutian I.	51 45.36 N	178 24.30 E			20
Rat I./Krysi Pt.	Aleutian I.	51 49.98 N	178 12.35 E			20
Little Sitkin I.	Aleutian I.	51 59.30 N	178 29.80 E			20
Amchitka I./Column Rocks	Aleutian I.	51 32.32 N	178 49.28 E			20
Amchitka I./East Cape	Aleutian I.	51 22.26 N	179 27.93 E	51 22.00 N	179 27.00 E	20
Amchitka I./Cape Ivakin	Aleutian I.	51 24.46 N	179 24.21 E			20
Semisopochnoi/Petrel Pt.	Aleutian I.	52 01.40 N	179 36.90 E	52 01.50 N	179 39.00 E	20
Semisopochnoi I./Pochnoi Pt.	Aleutian I.	51 57.30 N	179 46.00 E			20
Amatignak I. Nitrof Pt.	Aleutian I.	51 13.00 N	179 07.80 W			20
Unalga & Dinkum Rocks	Aleutian I.	51 33.67 N	179 04.25 W	51 35.09 N	179 03.66 W	20
Ulak I./Hasgox Pt.	Aleutian I.	51 18.90 N	178 58.90 W	51 18.70 N	178 59.60 W	20
Kavalga I.	Aleutian I.	51 34.50 N	178 51.73 W	51 34.50 N	178 49.50 W	20
Tag I.	Aleutian I.	51 33.50 N	178 34.50 W			20
Ugidak I.	Aleutian I.	51 34.95 N	178 30.45 W			20
Gramp Rock	Aleutian I.	51 28.87 N	178 20.58 W			20
Tanaga I./Bumpy Pt.	Aleutian I.	51 55.00 N	177 58.50 W	51 55.00 N	177 57.10 W	20
Bobrof I.	Aleutian I.	51 54.00 N	177 27.00 W			20
Kanaga I./Ship Rock	Aleutian I.	51 46.70 N	177 20.72 W			20
Kanaga I./North Cape	Aleutian I.	51 56.50 N	177 09.00 W			20
Adak I.	Aleutian I.	51 35.50 N	176 57.10 W	51 37.40 N	176 59.60 W	20
Little Tanaga Strait	Aleutian I.	51 49.09 N	176 13.90 W			20
Great Sitkin I.	Aleutian I.	52 06.00 N	176 10.50 W	52 06.60 N	176 07.00 W	20
Anagaksik I.	Aleutian I.	51 50.86 N	175 53.00 W			20
Kasatochi I.	Aleutian I.	52 11.11 N	175 31.00 W			20
Atka I./North Cape	Aleutian I.	52 24.20 N	174 17.80 W			20
Amlia I./Sviech. Harbor[11]	Aleutian I.	52 01.80 N	173 23.90 W			20
Sagigik I.[11]	Aleutian I.	52 00.50 N	173 09.30 W			20
Amlia I./East[11]	AIX	52 05.70 N	172 59.00 W	52 05.75 N	172 57.50 W	20
Tanadak I. (Amlia[11])	Aleutian I.	52 04.20 N	172 57.60 W			20
Agligadak I.[11]	Aleutian I.	52 06.09 N	172 54.23 W			20
Seguam I./Saddleridge Pt.[11]	Aleutian I.	52 21.05 N	172 34.40 W	52 21.02 N	172 33.60 W	20
Seguam I./Finch Pt.	Aleutian I.	52 23.40 N	172 27.70 W	52 23.25 N	172 24.30 W	20
Seguam I./South Side	Aleutian I.	52 21.60 N	172 19.30 W	52 15.55 N	172 31.22 W	20
Amukta I. & Rocks	Aleutian I.	52 27.25 N	171 17.90 W			20
Chagulak I.	Aleutian I.	52 34.00 N	171 10.50 W			20
Yunaska I.	Aleutian I.	52 41.40 N	170 36.35 W			20
Uliaga[3]	Bering Sea	53 04.00 N	169 47.00 W	53 05.00 N	169 46.00 W	20,10
Chuginadak	Gulf of Alaska	52 46.70 N	169 41.90 W			20
Kagamil[3]	Bering Sea	53 02.10 N	169 41.00 W			20,10
Samalga	Gulf of Alaska	52 46.00 N	169 15.00 W			20

TABLE 4 TO 50 CFR PART 679 STELLER SEA LION PROTECTION AREAS POLLOCK FISHERIES RESTRICTIONS—Continued

Column Number 1	2	3	4	5	6	7
Site Name	Area or Sub-area	Boundaries from Latitude	Boundaries from Longitude	Boundaries to[1] Latitude	Boundaries to[1] Longitude	Pollock No-fishing Zones for Trawl Gear[2,8] (nm)
Adugak I.[3]	Bering Sea	52 54.70 N	169 10.50 W			10
Umnak I./Cape Aslik[3]	Bering Sea	53 25.00 N	168 24.50 W			BA
Ogchul I.	Gulf of Alaska	52 59.71 N	168 24.24 W			20
Bogoslof I./Fire I.[3]	Bering Sea	53 55.69 N	168 02.05 W			BA
Polivnoi Rock	Gulf of Alaska	53 15.96 N	167 57.99 W			20
Emerald I.	Gulf of Alaska	53 17.50 N	167 51.50 W			20
Unalaska/Cape Izigan	Gulf of Alaska	53 13.64 N	167 39.37 W			20
Unalaska/Bishop Pt.9	Bering Sea	53 58.40 N	166 57.50 W			10
Akutan I./Reef-lava[9]	Bering Sea	54 08.10 N	166 06.19 W	54 09.10 N	166 05.50 W	10
Unalaska I./Cape Sedanka[6]	Gulf of Alaska	53 50.50 N	166 05.00 W			20
Old Man Rocks[6]	Gulf of Alaska	53 52.20 N	166 04.90 W			20
Akutan I./Cape Morgan[6]	Gulf of Alaska	54 03.39 N	165 59.65 W	54 03.70 N	166 03.68 W	20
Akun I./Billings Head[9]	Bering Sea	54 17.62 N	165 32.06 W	54 17.57 N	165 31.71 W	10
Rootok[6]	Gulf of Alaska	54 03.90 N	165 31.90 W	54 02.90 N	165 29.50 W	20
Tanginak I.[6]	Gulf of Alaska	54 12.00 N	165 19.40 W			20
Tigalda/Rocks NE[6]	Gulf of Alaska	54 09.60 N	164 59.00 W	54 09.12 N	164 57.18 W	20
Unimak/Cape Sarichef[9]	Bering Sea	54 34.30 N	164 56.80 W			10
Aiktak[6]	Gulf of Alaska	54 10.99 N	164 51.15 W			20
Ugamak I.[6]	Gulf of Alaska	54 13.50 N	164 47.50 W	54 12.80 N	164 47.50 W	20
Round (GOA)[6]	Gulf of Alaska	54 12.05 N	164 46.60 W			20
Sea Lion Rock (Amak)[9]	Bering Sea	55 27.82 N	163 12.10 W			10
Amak I. And rocks[9]	Bering Sea	55 24.20 N	163 09.60 W	55 26.15 N	163 08.50 W	10
Bird I.	Gulf of Alaska	54 40.00 N	163 17.2 W			10
Caton I.	Gulf of Alaska	54 22.70 N	162 21.30 W			3
South Rocks	Gulf of Alaska	54 18.14 N	162 41.3 W			10
Clubbing Rocks (S)	Gulf of Alaska	54 41.98 N	162 26.7 W			10
Clubbing Rocks (N)	Gulf of Alaska	54 42.75 N	162 26.7 W			10
Pinnacle Rock	Gulf of Alaska	54 46.06 N	161 45.85 W			3
Sushilnoi Rocks	Gulf of Alaska	54 49.30 N	161 42.73 W			10
Olga Rocks	Gulf of Alaska	55 00.45 N	161 29.81 W	54 59.09 N	161 30.89 W	10
Jude I.	Gulf of Alaska	55 15.75 N	161 06.27 W			20
Sea Lion Rocks (Shumagins)	Gulf of Alaska	55 04.70 N	160 31.04 W			3
Nagai I./Mountain Pt.	Gulf of Alaska	54 54.20 N	160 15.40 W	54 56.00 N	160 15.00 W	3
The Whaleback	Gulf of Alaska	55 16.82 N	160 05.04 W			3
Chernabura I.	Gulf of Alaska	54 45.18 N	159 32.99 W	54 45.87 N	159 35.74 W	20
Castle Rock	Gulf of Alaska	55 16.47 N	159 29.77 W			3
Atkins I.	Gulf of Alaska	55 03.20 N	159 17.40 W			20
Spitz I.	Gulf of Alaska	55 46.60 N	158 53.90 W			3
Mitrofania	Gulf of Alaska	55 50.20 N	158 41.90 W			3
Kak	Gulf of Alaska	56 17.30 N	157 50.10 W			20
Lighthouse Rocks	Gulf of Alaska	55 46.79 N	157 24.89 W			20
Sutwik I.	Gulf of Alaska	56 31.05 N	157 20.47 W	56 32.00 N	157 21.00 W	20
Chowiet I.	Gulf of Alaska	56 00.54 N	156 41.42 W	55 00.30 N	156 41.60 W	20
Nagai Rocks	Gulf of Alaska	55 49.80 N	155 47.50 W			20
Chirikof I.	Gulf of Alaska	55 46.50 N	155 39.50 W	55 46.44 N	155 43.46 W	20
Puale Bay[12]	Gulf of Alaska	57 40.60 N	155 23.10 W			3,10
Kodiak/Cape Ikolik	Gulf of Alaska	57 17.20 N	154 47.50 W			3
Takli I.	Gulf of Alaska	58 01.75 N	154 31.25 W			10
Cape Kuliak	Gulf of Alaska	58 08.00 N	154 12.50 W			10
Cape Gull	Gulf of Alaska	58 11.50 N	154 09.60 W	58 12.50 N	154 10.50 W	10
Kodiak/Cape Ugat	Gulf of Alaska	57 52.41 N	153 50.97 W			10
Sitkinak/Cape Sitkinak	Gulf of Alaska	56 34.30 N	153 50.96 W			10
Shakun Rock	Gulf of Alaska	58 32.80 N	153 41.50 W			10
Twoheaded I.	Gulf of Alaska	56 54.50 N	153 32.75 W	56 53.90 N	153 33.74 W	10
Cape Douglas (Shaw I.)[12]	Gulf of Alaska	59 00.00 N	153 22.50 W			20,10
Kodiak/Cape Barnabas	Gulf of Alaska	57 10.20 N	152 53.05 W			3
Kodiak/Gull Point[4]	Gulf of Alaska	57 21.45 N	152 36.30 W			10,3
Latax Rocks	Gulf of Alaska	58 40.10 N	152 31.30 W			10
Ushagat I./SW	Gulf of Alaska	58 54.75 N	152 22.20 W			10
Ugak I.[4]	Gulf of Alaska	57 23.60 N	152 17.50 W	57 21.90 N	152 17.40 W	10,3
Sea Otter I.	Gulf of Alaska	58 31.15 N	152 13.30 W			10
Long I.	Gulf of Alaska	57 46.82 N	152 12.90 W			10
Sud I.	Gulf of Alaska	58 54.00 N	152 12.50 W			10
Kodiak/Cape Chiniak	Gulf of Alaska	57 37.90 N	152 08.25 W			10
Sugarloaf I.	Gulf of Alaska	58 53.25 N	152 02.40 W			20
Sea Lion Rocks (Marmot)	Gulf of Alaska	58 20.53 N	151 48.83 W			10
Marmot I.[5]	Gulf of Alaska	58 13.65 N	151 47.75 W	58 09.90 N	151 52.06 W	15,20
Nagahut Rocks	Gulf of Alaska	59 06.00 N	151 46.30 W			10

TABLE 4 TO 50 CFR PART 679 STELLER SEA LION PROTECTION AREAS POLLOCK FISHERIES RESTRICTIONS—Continued

Column Number 1	2	3	4	5	6	7
Site Name	Area or Sub-area	Boundaries from Latitude	Boundaries from Longitude	Boundaries to[1] Latitude	Boundaries to[1] Longitude	Pollock No-fishing Zones for Trawl Gear[2,8] (nm)
Perl	Gulf of Alaska	59 05.75 N	151 39.75 W			10
Gore Point	Gulf of Alaska	59 12.00 N	150 58.00 W			10
Outer (Pye) I.	Gulf of Alaska	59 20.50 N	150 23.00 W	59 21.00 N	150 24.50 W	20
Steep Point	Gulf of Alaska	59 29.05 N	150 15.40 W			10
Seal Rocks (Kenai)	Gulf of Alaska	59 31.20 N	149 37.50 W			10
Chiswell Islands	Gulf of Alaska	59 36.00 N	149 34.00 W			10
Rugged Island	Gulf of Alaska	59 50.00 N	149 23.10 W	59 51.00 N	149 24.70 W	10
Point Elrington[7,10]	Gulf of Alaska	59 56.00 N	148 15.20 W			20
Perry I.[7]	Gulf of Alaska	60 44.00 N	147 54.60 W			
The Needle[7]	Gulf of Alaska	60 06.64 N	147 36.17 W			
Point Eleanor[7]	Gulf of Alaska	60 35.00 N	147 34.00 W			
Wooded I. (Fish I.)	Gulf of Alaska	59 52.90 N	147 20.65 W			20
Glacier Island[7]	Gulf of Alaska	60 51.30 N	147 14.50 W			
Seal Rocks (Cordova)[10]	Gulf of Alaska	60 09.78 N	146 50.30 W			20
Cape Hinchinbrook[10]	Gulf of Alaska	60 14.00 N	146 38.50 W			20
Middleton I.	Gulf of Alaska	59 28.30 N	146 18.80 W			10
Hook Point[10]	Gulf of Alaska	60 20.00 N	146 15.60 W			20
Cape St. Elias	Gulf of Alaska	59 47.50 N	144 36.20 W			20

[1]Where two sets of coordinates are given, the baseline extends in a clock-wise direction from the first set of geographic coordinates along the shoreline at mean lower-low water to the second set of coordinates. Where only one set of coordinates is listed, that location is the base point.

[2]Closures as stated in 50 CFR 679.22(a)(7)(iv), (a)(8)(ii) and (b)(2)(ii).

[3]This site lies within the Bogoslof area (BA). The BA consists of all waters of area 518 as described in Figure 1 of this part south of a straight line connecting 55°00′ N/170°00′ W, and 55°00′ N/168°11′4.75″ W. Closure to directed fishing for pollock around Uliaga and Kagamil is 20 nm for waters west of 170° W long. and 10 nm for waters east of 170° W long.

[4]The trawl closure between 0 nm to 10 nm is effective from January 20 through May 31. Trawl closure between 0 nm to 3 nm is effective from August 25 through November 1.

[5]Trawl closure between 0 nm to 15 nm is effective from January 20 through May 31. Trawl closure between 0 nm to 20 nm is effective from August 25 to November 1.

[6]Restriction area includes only waters of the Gulf of Alaska Area.

[7]Contact the Alaska Department of Fish and Game for fishery restrictions at these sites.

[8]No-fishing zones are the waters between 0 nm and the nm specified in column 7 around each site and within the BA.

[9]This site is located in the Bering Sea Pollock Restriction Area, closed to pollock trawling during the A season. This area consists of all waters of the Bering Sea subarea south of a line connecting the points 163°0′00″ W long./55°46′30″ N lat., 165°08′00″ W long./54°42′9″ N lat., 165°40′00″ long./54°26′30″ N lat., 166°12′00″ W long./54°18′40″ N lat., and 167°0′00″ W long./54°8′50″ N lat.

[10]The 20 nm closure around this site is effective in federal waters outside of State of Alaska waters of Prince William Sound.

[11]Some or all of the restricted area is located in the Seguam Foraging area (SFA) which is closed to all gears types. The SFA is established as all waters within the area between 52° N lat. and 53° N lat. and between 173°30′ W long. and 172°30′ W long.

[12]The 3 nm trawl closure around Puale Bay and the 20 nm trawl closure around Cape Douglas/Shaw I. are effective January 20 through May 31. The 10 nm trawl closure around Puale Bay and the 10 nm trawl closure around Cape Douglas/Shaw I. are effective August 25 through November 1.

Table 5 to 50 CFR Part 679 Steller Sea Lion Protection Areas Pacific Cod Fisheries Restrictions

Column Number 1	2	3	4	5	6	7	8	9
Site Name	Area or Subarea	Boundaries from		Boundaries to[1]		Pacific Cod No-fishing Zones for Trawl Gear[2,3] (nm)	Pacific Cod No-fishing Zone for Hook-and-Line Gear[2,3] (nm)	Pacific Cod No-fishing Zone for Pot Gear[2,3] (nm)
		Latitude	Longitude	Latitude	Longitude			
St. Lawrence I./S Punuk I.	BS	63 04.00 N	168 51.00 W			20	20	20
St. Lawrence I./SW Cape	BS	63 18.00 N	171 26.00 W			20	20	20
Hall I.	BS	60 37.00 N	173 00.00 W			20	20	20
St. Paul I./Sea Lion Rock	BS	57 06.00 N	170 17.50 W			3	3	3
St. Paul I./NE Pt.	BS	57 15.00 N	170 06.50 W			3	3	3
Walrus I. (Pribilofs)	BS	57 11.00 N	169 56.00 W			10	3	3
St George I./Dalnoi Pt.	BS	56 36.00 N	169 46.00 W			3	3	3
St. George I./S. Rookery	BS	56 33.50 N	169 40.00 W			3	3	3
Cape Newenham	BS	58 39.00 N	162 10.50 W			20	20	20
Round (Walrus Islands)	BS	58 36.00 N	159 58.00 W			20	20	20
Attu I./Cape Wrangell[11]	AI	52 54.60 N	172 27.90 E	52 55.40 N	172 27.20 E	20, 10	3	3
Agattu I./Gillon Pt.[11]	AI	52 24.13 N	173 21.31 E			20, 10	3	3
Attu I./Chirikof Pt.[11]	AI	52 49.75 N	173 26.00 E			20, 3		
Agattu I./Cape Sabak[11]	AI	52 22.50 N	173 43.30 E	52 21.80 N	173 41.40 E	20, 10	3	3
Alaid I.[11]	AI	52 46.50 N	173 51.50 E	52 45.00 N	173 56.50 E	20, 3		
Shemya I.[11]	AI	52 44.00 N	174 08.70 E			20, 3		
Buldir I.[11]	AI	52 20.25 N	175 54.03 E	52 20.38 N	175 53.85 E	20, 10	10	10
Kiska I./Cape St. Stephen[11]	AI	51 52.50 N	177 12.70 E	51 53.50 N	177 12.00 E	20, 10	3	3
Kiska I. Sobaka & Vega[11]	AI	51 49.50 N	177 19.00 E	51 48.50 N	177 20.50 E	20, 3		
Kiska I./Lief Cove[11]	AI	51 57.16 N	177 20.41 E	51 57.24 N	177 20.53 E	20, 10	3	3

Column Number 1	2	3	4	5	6	7	8	9
Site Name	Area or Subarea	Boundaries from		Boundaries to[1]		Pacific Cod No-fishing Zones for Trawl Gear[2,3] (nm)	Pacific Cod No-fishing Zone for Hook-and-Line Gear[2,3] (nm)	Pacific Cod No-fishing Zone for Pot Gear[2,3] (nm)
		Latitude	Longitude	Latitude	Longitude			
Kiska I./Sirius Pt.[11]	AI	52 08.50 N	177 36.50 E			20, 3		
Tanadak I. (Kiska)[11]	AI	51 56.80 N	177 46.80 E			20, 3		
Segula I.[11]	AI	51 59.90 N	178 05.80 E	52 03.06 N	178 08.80 E	20, 3		
Ayugadak Point[11]	AI	51 45.36 N	178 24.30 E			20, 10	3	3
Rat I./Krysi Pt.[11]	AI	51 49.98 N	178 12.35 E			20, 3		
Little Sitkin I.[11]	AI	51 59.30 N	178 29.80 E			20, 3		
Amchitka I./Column[11]	AI	51 32.32 N	178 49.28 E			20, 10	3	3
Amchitka I./East Cape[11]	AI	51 22.26 N	179 27.93 E	51 22.00 N	179 27.00 E	20,10	3	3
Amchitka I./Cape Ivakin[11]	AI	51 24.46 N	179 24.21 E			20, 3		
Semisopochnoi/Petrel Pt.[11]	AI	52 01.40 N	179 36.90 E	52 01.50 N	179 39.00 E	20, 10	3	3
Semisopochnoi I./Pochnoi Pt.[11]	AI	51 57.30 N	179 46.00 E			20, 10	3	3
Amatignak I./Nitrof Pt.[11]	AI	51 13.00 N	179 07.80 W			20, 3		
Unalga & Dinkum Rocks[11]	AI	51 33.67 N	179 04.25 W	51 35.09 N	179 03.66 W	20, 3		
Ulak I./Hasgox Pt.[11]	AI	51 18.90 N	178 58.90 W	51 18.70 N	178 59.60 W	20, 10	3	3
Kavalga I.[11]	AI	51 34.50 N	178 51.73 W	51 34.50 N	178 49.50 W	20, 3		
Tag I.[11]	AI	51 33.50 N	178 34.50 W			20, 10	3	3
Ugidak I.[11]	AI	51 34.95 N	178 30.45 W			20, 3		
Gramp Rock[11]	AI	51 28.87 N	178 20.58 W			20, 10	3	3
Tanaga I./Bumpy Pt.[11]	AI	51 55.00 N	177 58.50 W	51 55.00 N	177 57.10 W	20,3		
Bobrof I.	AI	51 54.00 N	177 27.00 W			3		
Kanaga I./Ship Rock	AI	51 46.70 N	177 20.72 W			3		

Column Number 1	2	3	4	5	6	7	8	9
Site Name	Area or Subarea	Boundaries from		Boundaries to[1]		Pacific Cod No-fishing Zones for Trawl Gear[2,3] (nm)	Pacific Cod No-fishing Zone for Hook-and-Line Gear[2,3] (nm)	Pacific Cod No-fishing Zone for Pot Gear[2,3] (nm)
		Latitude	Longitude	Latitude	Longitude			
Kanaga I./North Cape	AI	51 56.50 N	177 09.00 W			3		
Adak I.	AI	51 35.50 N	176 57.10 W	51 37.40 N	176 59.60 W	10	3	3
Little Tanaga Strait	AI	51 49.09 N	176 13.90 W			3		
Great Sitkin I.	AI	52 06.00 N	176 10.50 W	52 06.60 N	176 07.00 W	3		
Anagaksik I.	AI	51 50.86 N	175 53.00 W			3		
Kasatochi I.	AI	52 11.11 N	175 31.00 W			10	.3	3
Atka I./N. Cape	AI	52 24.20 N	174 17.80 W			3		
Amlia I./Sviech. Harbor[4]	AI	52 01.80 N	173 23.90 W			3		
Sagigik I.[4]	AI	52 00.50 N	173 09.30 W			3		
Amlia I./East[4]	AI	52 05.70 N	172 59.00 W	52 05.75 N	172 57.50 W	3	20	20
Tanadak I. (Amlia)[4]	AI	52 04.20 N	172 57.60 W			3	20	20
Agligadak I.[4]	AI	52 06.09 N	172 54.23 W			20	20	20
Seguam I./Saddleridge Pt.[4]	AI	52 21.05 N	172 34.40 W	52 21.02 N	172 33.60 W	10	20	20
Seguam I./Finch Pt.	AI	52 23.40 N	172 27.70 W	52 23.25 N	172 24.30 W	3	20	20
Seguam I./South Side	AI	52 21.60 N	172 19.30 W	52 15.55 N	172 31.22 W	3	20	20
Amukta I. & Rocks	AI	52 27.25 N	171 17.90 W			3	20	20
Chagulak I.	AI	52 34.00 N	171 10.50 W			3	20	20
Yunaska I.	AI	52 41.40 N	170 36.35 W			10	20	20
Uliaga[5, 14]	BS	53 04.00 N	169 47.00 W	53 05.00 N	169 46.00 W	10	20	20
Chuginadak[14]	GOA	52 46.70 N	169 41.90 W			20	20,10	20
Kagamil[5, 14]	BS	53 02.10 N	169 41.00 W			10	20	20
Samalga	GOA	52 46.00 N	169 15.00 W			20	10	20

Column Number 1	2	3	4	5	6	7	8	9
Site Name	Area or Subarea	Boundaries from		Boundaries to[1]		Pacific Cod No-fishing Zones for Trawl Gear[2,3] (nm)	Pacific Cod No-fishing Zone for Hook-and-Line Gear[2,3] (nm)	Pacific Cod No-fishing Zone for Pot Gear[2,3] (nm)
		Latitude	Longitude	Latitude	Longitude			
Adugak I.[5]	BS	52 54.70 N	169 10.50 W			10	BA	BA
Umnak I./Cape Aslik[5]	BS	53 25.00 N	168 24.50 W			BA	BA	BA
Ogchul I.	GOA	52 59.71 N	168 24.24 W			20	10	20
Bogoslof I./Fire I.[5]	BS	53 55.69 N	168 02.05 W			BA	BA	BA
Polivnoi Rock[9]	GOA	53 15.96 N	167 57.99 W			20	10	20
Emerald I.[13, 9]	GOA	53 17.50 N	167 51.50 W			20	10	20
Unalaska/Cape Izigan[9]	GOA	53 13.64 N	167 39.37 W			20	10	20
Unalaska/Bishop Pt.[6, 13]	BS	53 58.40 N	166 57.50 W			10	10	3
Akutan I./Reef-lava[6]	BS	54 08.10 N	166 06.19 W	54 09.10 N	166 05.50 W	10	10	3
Unalaska I./Cape Sedanka[9]	GOA	53 50.50 N	166 05.00 W			20	10	20
Old Man Rocks[9]	GOA	53 52.20 N	166 04.90 W			20	10	20
Akutan I./Cape Morgan[9]	GOA	54 03.39 N	165 59.65 W	54 03.70 N	166 03.68 W	20	10	20
Akun I./Billings Head	BS	54 17.62 N	165 32.06 W	54 17.57 N	165 31.71 W	10	3	3
Rootok[9]	GOA	54 03.90 N	165 31.90 W	54 02.90 N	165 29.50 W	20	10	20
Tanginak I.[9]	GOA	54 12.00 N	165 19.40 W			20	10	20
Tigalda/Rocks NE[9]	GOA	54 09.60 N	164 59.00 W	54 09.12 N	164 57.18 W	20	10	20
Unimak/Cape Sarichef	BS	54 34.30 N	164 56.80 W			10	3	3
Aiktak[9]	GOA	54 10.99 N	164 51.15 W			20	10	20
Ugamak I.[9]	GOA	54 13.50 N	164 47.50 W	54 12.80 N	164 47.50 W	20	10	20
Round (GOA)[9]	GOA	54 12.05 N	164 46.60 W			20	10	20
Sea Lion Rock (Amak)	BS	55 27.82 N	163 12.10 W			10	7	7
Amak I. And rocks	BS	55 24.20 N	163 09.60 W	55 26.15 N	163 08.50 W	10	3	3
Bird I.	GOA	54 40.00 N	163 17.2 W			10		

Column Number 1	2	3	4	5	6	7	8	9
Site Name	Area or Subarea	Boundaries from		Boundaries to[1]		Pacific Cod No-fishing Zones for Trawl Gear[2,3] (nm)	Pacific Cod No-fishing Zone for Hook-and-Line Gear[2,3] (nm)	Pacific Cod No-fishing Zone for Pot Gear[2,3] (nm)
		Latitude	Longitude	Latitude	Longitude			
Caton I.	GOA	54 22.70 N	162 21.30 W			3	3	
South Rocks	GOA	54 18.14 N	162 41.3 W			10		
Clubbing Rocks (S)	GOA	54 41.98 N	162 26.7 W			10	3	3
Clubbing Rocks (N)	GOA	54 42.75 N	162 26.7 W			10	3	3
Pinnacle Rock	GOA	54 46.06 N	161 45.85 W			3	3	3
Sushilnoi Rocks	GOA	54 49.30 N	161 42.73 W			10		
Olga Rocks	GOA	55 00.45 N	161 29.81 W	54 59.09 N	161 30.89 W	10		
Jude I.	GOA	55 15.75 N	161 06.27 W			20		
Sea Lion Rocks (Shumagins)	GOA	55 04.70 N	160 31.04 W			3	3	3
Nagai I./Mountain Pt.	GOA	54 54.20 N	160 15.40 W	54.56.00 N	160.15.00 W	3	3	3
The Whaleback	GOA	55 16.82 N	160 05.04 W			3	3	3
Chernabura I.	GOA	54 45.18 N	159 32.99 W	54 45.87 N	159 35.74 W	20	3	3
Castle Rock	GOA	55 16.47 N	159 29.77 W			3	3	
Atkins I.	GOA	55 03.20 N	159 17.40 W			20	3	3
Spitz I.	GOA	55 46.60 N	158 53.90 W			3	3	3
Mitrofania	GOA	55 50.20 N	158 41.90 W			3	3	3
Kak	GOA	56 17.30 N	157 50.10 W			20	20	3
Lighthouse Rocks	GOA	55 46.79 N	157 24.89 W			20	20	20
Sutwik I.	GOA	56 31.05 N	157 20.47 W	56 32.00 N	157 21.00 W	20	20	20
Chowiet I.	GOA	56 00.54 N	156 41.42 W	56 00.30 N	156 41.60 W	20	20	20
Nagai Rocks	GOA	55 49.80 N	155 47.50 W			20	20	20
Chirikof I.	GOA	55 46.50 N	155 39.50 W	55 46.44 N	155 43.46 W	20	20	20

Column Number 1	2	3	4	5	6	7	8	9
Site Name	Area or Subarea	Boundaries from		Boundaries to[1]		Pacific Cod No-fishing Zones for Trawl Gear[2,3] (nm)	Pacific Cod No-fishing Zone for Hook-and-Line Gear[2,3] (nm)	Pacific Cod No-fishing Zone for Pot Gear[2,3] (nm)
		Latitude	Longitude	Latitude	Longitude			
Puale Bay	GOA	57 40.60 N	155 23.10 W			10		
Kodiak/Cape Ikolik	GOA	57 17.20 N	154 47.50 W			3	3	3
Takli I.	GOA	58 01.75 N	154 31.25 W			10		
Cape Kuliak	GOA	58 08.00 N	154 12.50 W			10		
Cape Gull	GOA	58 11.50 N	154 09.60 W	58 12.50 N	154 10.50 W	10		
Kodiak/Cape Ugat	GOA	57 52.41 N	153 50.97 W			10		
Sitkinak/Cape Sitkinak	GOA	56 34.30 N	153 50.96 W			10		
Shakun Rock	GOA	58 32.80 N	153 41.50 W			10		
Twoheaded I.	GOA	56 54.50 N	153 32.75 W	56 53.90 N	153 33.74 W	10		
Cape Douglas (Shaw I.)	GOA	59 00.00 N	153 22.50 W			10		
Kodiak/Cape Barnabas	GOA	57 10.20 N	152 53.05 W			3	3	
Kodiak/Gull Point[7]	GOA	57 21.45 N	152 36.30 W			10, 3		
Latax Rocks	GOA	58 40.10 N	152 31.30 W			10		
Ushagat I./SW	GOA	58 54.75	152 22.20 W			10		
Ugak I.[7]	GOA	57 23.60 N	152 17.50 W	57 21.90 N	152 17.40 W	10, 3		
Sea Otter I.	GOA	58 31.15 N	152 13.30 W			10		
Long I.	GOA	57 46.82 N	152 12.90 W			10		
Sud I.	GOA	58 54.00 N	152 12.50 W			10		
Kodiak/Cape Chiniak	GOA	57 37.90 N	152 08.25 W			10		
Sugarloaf I.	GOA	58 53.25 N	152 02.40 W			20	10	10
Sea Lion Rocks (Marmot)	GOA	58 20.53 N	151 48.83 W			10		
Marmot I.[8]	GOA	58 13.65 N	151 47.75 W	58 09.90 N	151 52.06 W	15, 20	10	10
Nagahut Rocks	GOA	59 06.00 N	151 46.30 W			10		

Column Number 1	2	3	4	5	6	7	8	9
Site Name	Area or Subarea	Boundaries from		Boundaries to[1]		Pacific Cod No-fishing Zones for Trawl Gear[2,3] (nm)	Pacific Cod No-fishing Zone for Hook-and-Line Gear[2,3] (nm)	Pacific Cod No-fishing Zone for Pot Gear[2,3] (nm)
		Latitude	Longitude	Latitude	Longitude			
Perl	GOA	59 05.75 N	151 39.75 W			10		
Gore Point	GOA	59 12.00 N	150 58.00 W			10		
Outer (Pye) I.	GOA	59 20.50 N	150 23.00 W	59 21.00 N	150 24.50 W	20	10	10
Steep Point	GOA	59 29.05 N	150 15.40 W			10		
Seal Rocks (Kenai)	GOA	59 31.20 N	149 37.50 W			10		
Chiswell Islands	GOA	59 36.00 N	149 34.00 W			10		
Rugged Island	GOA	59 50.00 N	149 23.10 W			10		
Point Elrington[10, 12]	GOA	59 56.00 N	148 15.20 W			20		
Perry I.[10]	GOA	60 44.00 N	147 54.60 W					
The Needle[10]	GOA	60 06.64 N	147 36.17 W					
Point Eleanor[10]	GOA	60 35.00 N	147 34.00 W					
Wooded I. (Fish I.)	GOA	59 52.90 N	147 20.65 W			20	3	3
Glacier Island[10]	GOA	60 51.30 N	147 14.50 W					
Seal Rocks (Cordova)[12]	GOA	60 09.78 N	146 50.30 W			20	3	3
Cape Hinchinbrook[12]	GOA	60 14.00 N	146 38.50 W			20		
Middleton I.	GOA	59 28.30 N	146 18.80 W			10		
Hook Point[12]	GOA	60 20.00 N	146 15.60 W			20		
Cape St. Elias	GOA	59 47.50 N	144 36.20 W			20		

BS = Bering Sea, AI = Aleutian Islands, GOA = Gulf of Alaska

[1]Where two sets of coordinates are given, the baseline extends in a clock-wise direction from the first set of geographic coordinates along the shoreline at mean lower-low water to the second set of coordinates. Where only one set of coordinates is listed, that location is the base point.

[2] Closures as stated in 50 CFR 679.22(a)(7)(v), (a)(8)(iv) and (b)(2)(iii).

[3] No-fishing zones are the waters between 0 nm and the nm specified in columns 7, 8, and 9 around each site and within the Bogoslof area (BA) and the Seguam Foraging Area (SFA).

[4] Some or all of the restricted area is located in the SFA which is closed to all gears types. The SFA is established as all waters within the area between 52° N lat. and 53° N lat. and between 173°30' W long. and 172°30' W long. Amlia I./East, and Tanadak I. (Amlia) haulouts 20 nm hook-and-line and pot closures apply only to waters located east of 173° W longitude.

[5]This site lies within the BA which is closed to all gear types. The BA consists of all waters of area 518 as described in Figure 1 of this part south of a straight line connecting 55°00'N/170°00'W, and 55°00' N/168°11'4.75" W.

[6]Hook-and-line no-fishing zones apply only to vessels greater than or equal to 60 feet LOA in waters east of 167° W long. For Bishop Point the 10 nm closure west of 167° W. long. applies to all hook and line and jig vessels.

[7]The trawl closure between 0 nm to 10 nm is effective from January 20 through June 10. Trawl closure between 0 nm to 3 nm is effective from September 1 through November 1.

[8] The trawl closure between 0 nm to 15 nm is effective from January 20 through June 10. Trawl closure between 0 nm to 20 nm is effective from September 1 through November 1.

[9]Restriction area includes only waters of the Gulf of Alaska Area.

[10]Contact the Alaska Department of Fish and Game for fishery restrictions at these sites.

[11]Directed fishing for Pacific cod using trawl gear is prohibited in the harvest limit area (HLA) as defined at § 679.2 until the HLA Atka mackerel directed fishery in the A or B seasons is completed. The 20 nm closure around Gramp Rock and Tanaga I./Bumpy Pt. applies only to waters west of 178°W long. and only during the HLA directed fishery. After closure of the Atka mackerel HLA directed fishery, directed fishing for Pacific cod using trawl gear is prohibited in the HLA between 0 nm to 10 nm of rookeries and between 0 nm to 3 nm of haulouts. Directed fishing for Pacific cod using trawl gear is prohibited between 0-3 nm of Tanaga I./Bumpy Pt.

[12] The 20 nm closure around this site is effective only in waters outside of the State of Alaska waters of Prince William Sound.

[13] See 50 CFR 679.22(a)(7)(i)(C) for exemptions for catcher vessels less than 60 feet (18.3 m) LOA using jig or hook-and-line gear between Bishop Point and Emerald Island closure areas.

[14]Trawl closure around this site is limited to waters east of 170°0'00" W long. Closure to hook-and-line fishing around Chuginadak is 20 nm for waters west of 170°W long. and 10 nm for waters east of 170°W long.

[FR Doc. 04–27698 Filed 12–17–04; 8:45 am]

BILLING CODE 3510–22–S

Proposed Rules

Federal Register
Vol. 69, No. 243
Monday, December 20, 2004

This section of the FEDERAL REGISTER contains notices to the public of the proposed issuance of rules and regulations. The purpose of these notices is to give interested persons an opportunity to participate in the rule making prior to the adoption of the final rules.

GOVERNMENT ACCOUNTABILITY OFFICE

4 CFR Part 21

Government Accountability Office, Administrative Practice and Procedure, Bid Protest Regulations, Government Contracts

AGENCY: Government Accountability Office.[1]

ACTION: Proposed rule.

SUMMARY: The Government Accountability Office (GAO) is proposing to amend its Bid Protest Regulations, promulgated in accordance with the Competition in Contracting Act of 1984 (CICA), 31 U.S.C. 3551–3556, to implement the requirements in the Ronald W. Reagan National Defense Authorization Act for Fiscal Year 2005, Pub. L. 108–375, 118 Stat. 1811, enacted on October 28, 2004. The proposed amendments to GAO's Bid Protest Regulations implement the legislation's provisions related to the bid protest process, where a public-private competition has been conducted under Office of Management and Budget (OMB) Circular A–76, as revised on May 29, 2003, regarding an activity or function of a Federal agency performed by more than 65 full-time equivalent employees of the Federal agency. In this regard, the legislating grants designated representatives of an in-house competitor the status of an ''interested party'' to file a protest at GAO or the status of an ''intervenor'' to participate in a protest filed at GAO. In addition, consistent with the legislation, GAO is proposing to add a provision to its Bid Protest Regulations stating that GAO will not review the decision of an agency tender official to file a protest (or not to file a protest) in connection with a public-private competition. At this time, GAO believes that these proposed revisions are the only regulatory changes necessary to implement the statutory requirements expanding the definitions of an interested party and an intervenor in protests involving public-private competitions. GAO welcomes comments on these proposed revisions, as well as suggestions for changes to other areas of GAO's Bid Protest Regulations or the bid protest process at GAO relating to protests of public-private competitions conducted under OMB Circular A–76.

DATES: Comments must be submitted on or before February 18, 2005.

ADDRESSES: Comments may be submitted by e-mail at *RegComments@gao.gov*, or by facsimile at (202) 512–9749. Due to delivery delays, submission by regular mail is discouraged. Comments may be sent by Federal Express or United Parcel Service addressed to: Michael R. Golden, Assistant General Counsel, Government Accountability Office, 441 G Street, NW., Washington, DC 20548. GAO intends to make all comments filed available to the public, including names and other identifying information. Information in a submission that the sender does not believe should be released should be clearly marked.

FOR FURTHER INFORMATION CONTACT: Daniel I. Gordon (Managing Associate General Counsel), Michael R. Golden (Assistant General Counsel) or Linda. S. Lebowitz (Senior Attorney), (202) 512–9732.

SUPPLEMENTARY INFORMATION: On June 13, 2003, GAO published a notice in the **Federal Register**, 68 FR 35411, which sought comments on a number of issued concerning the effect of OMB's revisions to Circular A–76 (revised Circular), which governs how Federal agencies determine whether to transfer performance of commercial activities from the public to the private sector, or vice versa. Performance of Commercial Activities, 68 FR 32134 (May 29, 2003). These revisions make competitions involving in-house competitors more similar to private-private competitions conducted under the Federal Acquisition Regulation (FAR) than has previously been the case with the competitive sourcing process. GAO specifically solicited comments regarding two key legal questions, namely, whether the revisions made to the Circular affect the standing of an in-house competitor to file a protest at GAO and, if so, who should have the representational capacity to file such a protest. The notice also solicited comments on other procedural issues raised by the Circular's revisions.

In response to this notice, GAO received a total of 71 sets of comments: 1 letter from three members of Congress; 9 letters from agencies; 5 letters from unions; 7 letters from associations; 47 letters from individuals (including Federal employees); and 2 letters from private lawyers. Some of those submitting comments argued that no one has standing to protest on behalf of an in-house competitor without an amendment to CICA, which provides the statutory framework for GAO's bide protest function; others contended that the 2003 revisions to the Circular justified GAO finding that individual Federal employees and their unions now had standing to file protests without the need to amend CICA. GAO also received comments concerning a number of other procedural issues including, for example, the requirement to exhaust the administrative appeal process before filing a protest a GAO, the authority for GAO to review streamlined competitions involving 65 or fewer full-time equivalent employees, and the applicability of GAO's protective order procedures.

GAO carefully considered the comments received and ultimately addressed the in-house competitor standing issue in *Dan Duefrene; Kelley Dull; Brenda Neuerburg; Gabrielle Martin,* B–293590.2 *et al.*, April 19, 2004, CPD ¶ 82. In that decision, GAO concluded that, notwithstanding the May 29, 2003 revisions to OMB Circular A–76, the in-house competitor in a public-private competition conducted under the Circular was not an offeror and, therefore, under the current language of CICA, no representative of an in-house competitor was an interested party eligible to maintain a protest before GAO.

On the same day that the decision *Dan Deufrene, et al.* was issued, the Comptroller General sent a letter to the cognizant congressional committees, explaining that, based on GAO's legal analysis of its statutory authority to decide bid protests under CICA, because an in-house competitor did not meet the current CICA definition of an interested party, GAO was required to dismiss any

[1] Effective July 7, 2004, the agency's legal name became the Government Accountability Office pursuant to Pub. L. 108–271, 118 Stat. 811. GAO will amend title 4, chapter I of the CFR to reflect the name change.

protest filed by an in-house competitor. In the letter, the Comptroller General recognized that policy considerations, including the principles unanimously agreed to by the congressionally-chartered Commercial Activities Panel, weighed in favor of allowing certain protests by in-house competitors with respect to A–76 competitions and, as a result, Congress might want to consider amending CICA to allow GAO to decide such protests. Consistent with that letter, the National Defense Authorization Act for Fiscal Year 2005 amended GAO's statutory authority under CICA to decide protests filed by in-house competitors.

The proposed revisions to GAO's Bid Protest Regulations to implement the National Defense Authorization Act for Fiscal Year 2005 are set forth below:

Interested Party

In accordance with sec. 326(a) of the National Defense Authorization Act for Fiscal Year 2005, GAO proposes to add a new paragraph to paragraph (a) of 4 CFR 21.0 to expand the definition of an interested party to include the official responsible for submitting the Federal agency tender in a public-private competition conducted under OMB Circular A–76 regarding an activity or function of a Federal agency performed by more than 65 full-time equivalent employees of the Federal agency.

Intervenor

In accordance with sec. 326(c) of the National Defense Authorization Act for Fiscal Year 2005, GAO proposes to add a new paragraph to paragraph (b) of 4 CFR 21.0 to expand the definition of an intervenor to include a person representing a majority of the employees of the Federal agency who are engaged in the performance of the activity or function subject to the public-private competition conducted under OMB Circular A–76 regarding an activity or function of a Federal agency performed by more than 65 full-time equivalent employees of the Federal agency. In addition, based on the proposed expansion of the definition of an interested party, GAO proposes to revise paragraph (b) of 4 CFR 21.0 to expand the definition of an intervenor to include the official responsible for submitting the Federal agency tender.

Issues Not for GAO Review

In accordance with sec. 326(b) of the National Defense Authorization Act for Fiscal Year 2005, GAO is proposing to add a new paragraph to 4 CFR 21.5 to reflect that GAO will not review the decision of an agency tender official to file a protest (or not to file a protest) in connection with a public-private competition.

These proposed revisions reflect the only language in sec. 326 of the National Defense Authorization Act for Fiscal Year 2005 that directly amends GAO's bid protest authority under CICA. GAO does not believe that any other regulatory revisions are required at this time. GAO solicits comments on these proposed revisions, as well as suggestions for changes to other areas of GAO's Bid Protest Regulations or GAO's bid protest relating to A–76 protests under the revised Circular, including, for example, the applicability of GAO's protective order procedures. Prior to issuing final regulations, GAO will determine, based on the comments received in response to this notice of proposed rulemaking, whether additional revisions to GAO's Bid Protest Regulations are warranted. GAO also will consider whether any changes to the bid protest process in the context of GAO's considerations of A–76 protests under the revised Circular are required and, if so, the most appropriate means of publicizing these changes, for example, by revising GAO's Bid Protest Descriptive Guide.

Other Procedural Matters

With reference to the responses GAO received to its notice of June 13, 2003, GAO believes that it is appropriate here to address two issues raised in that notice—whether GAO would continue to apply the requirement that the protester first exhaust the administrative appeal process before filing its protest at GAO and whether GAO would hear protests of streamlined competitions authorized by the revisions to OMB Circular A–76. GAO notes that there was virtual unanimity from commenters concerning the resolution of these two issues.

GAO had a longstanding rule that it would generally not hear a protest regarding an A–76 cost comparison until the unique A–76 administrative appeal process provided by the agency was exhausted. GAO's position was based on considerations of comity and efficiency, and GAO recognized that there was no statutory or regulatory requirement that an offeror exhaust available agency-level remedies before protesting to GAO. The revised Circular abolished the unique A–76 administrative appeal process, instead providing that a directly interested party could contest at the agency various aspects of a standard competition and that the resolution of such contest by the agency would be governed by the procedures in FAR Subpart 33.103, which describe the agency-level bid protest process.

Under GAO's Bid Protest Regulations with the exception of the exhaustion rule GAO imposed for A–76 protests, a protester has never been required to file an agency-level protest before filing a protest at GAO. In light of the fact that the revised Circular abolishes the unique A–76 administrative appeal process and in accordance with the consensus view of the commenters, GAO has decided that it will not apply the exhaustion requirement to protests filed at GAO challenging A–76 competitions conducted under the revised Circular. In other words, protests concerning A–76 competitions under the revised Circular will be treated just like any other protest filed at GAO. Accordingly, as with non-A–76 protests, while a prostester challenging an A–76 competition may elect to seek resolution of its protest at the agency in the first instance, GAO will not require the protester to file an agency-level protest as a prerequisite to filing a protest at GAO.

Regarding streamlined competitions, *i.e.,* competitions under the process reserved by the revised Circular for functions involving 65 or fewer full-time equivalent employees, the revised Circular states that no party may contest any aspect of the competition. In *Vallie Bray*, B–293840, B–293840.2, Mar. 30, 2004, 2004 CPD ¶ 52, GAO addressed the protest of a streamlined competition conducted under the revised Circular. GAO concluded that, where a streamlined competition is conducted without using the procurement system—that is, without a solicitation being issued—GAO lacks jurisdiction under CICA to consider a protest. If, however, an agency issues a solicitation as part of a streamlined A–76 competition, thereby using the procurement system to determine whether to contract out or to perform work in-house, GAO would consider a protest by an interested party alleging that the agency had not complied with the applicable procedures in the selection process or that the agency had conducted an evaluation that was inconsistent with the solicitation's evaluation criteria or applicable statutes and regulations. GAO intends to follow the *Vallie Bray* precedent with respect to protests of streamlined competitions conducted under the revised Circular.

List of Subjects in CFR Part 21

Administrative practice and procedure, Bid protest regulations, Government contracts.

For the reasons set out in the preamble, title 34, chapter I, subchapter

B, part 21 of the Code of Federal Regulations is proposed to be revised to read as follows:

PART 21—BID PROTEST REGULATIONS

1. The authority citation for part 21 continues to read as follows:

Authority: 31 U.S.C. 3551–3556.

2. Amend § 21.0 by redesignating paragraph (a) as paragraph (a)(1) and adding new paragraph (a)(2), and by redesignating paragraph (b) as paragraph (b)(1) and adding new paragraph (b)(2) to read as follows:

§ 21.0 Definitions.

(a)(1) * * *

(a)(2) In a public-private competition conducted under Office of Management and Budget Circular A–76 regarding an activity or function of a Federal agency performed by more than 65 full-time equivalent employees of the Federal agency, the official responsible for submitting the Federal agency tender is also an *interested party.*

(b)(1) * * *

(b)(2) If an interested party files a protest in connection with a public-private competition conducted under Office of Management and Budget Circular A–76 regarding an activity or function of a Federal agency performed by more than 65 full-time equivalent employees of the Federal agency, a person representing a majority of the employees of the Federal agency who are engaged in the performance of the activity or function subject to the public-private competition and the official responsible for submitting the Federal agency tender as described in paragraph (a)(2) of this section may also be *intervenors.*

* * * * *

3. Amend § 21.5 by adding paragraph (k) to read as follows:

§ 21.5 Protest issues not for consideration.

(k) *Decision whether or not to file a protest on behalf of Federal employees.* GAO will not review the decision of an agency tender official to file a protest or not to file a protest in connection with a public-private competition.

Anthony H. Gamboa,

General Counsel, United States Government Accountability Office.

[FR Doc. 04–27615 Filed 12–16–04; 10:03 am]

BILLING CODE 1610–02–M

DEPARTMENT OF AGRICULTURE

Agricultural Research Service

7 CFR Part 500

National Arboretum

AGENCY: Agricultural Research Service; Research, Education, and Economics; USDA.

ACTION: Proposed rule.

SUMMARY: The Department of Agriculture (USDA) seeks comments on a proposed rule change that would modify the rules of conduct at the United States National Arboretum (USNA) and the schedule of fees to be charged for certain uses of the facilities, grounds, and services at the USNA.

DATES: Comments must be submitted on or before February 18, 2005.

ADDRESSES: Address all correspondence to Thomas S. Elias, Director, U.S. National Arboretum, Beltsville Area, Agricultural Research Service, 3501 New York Avenue, NE., Washington, DC 20002.

FOR FURTHER INFORMATION CONTACT: Dana Laster, Administrative and Marketing Manager, U.S. National Arboretum, Beltsville Area, ARS, 3501 New York Avenue, NE., Washington, DC 20002; (202) 245–4539.

SUPPLEMENTARY INFORMATION:

Classification

This rule change has been reviewed under Executive Order 12866, and it has been determined that it is not a ''significant regulatory action'' rule because it will not have an annual effect on the economy of $100 million or more or adversely and materially affect a sector of the economy, productivity, competition, jobs, the environment, public health or safety, or State, local, or Tribal governments or communities. This rule change will not create any serious inconsistencies or otherwise interfere with actions taken or planned by another agency. It will not materially alter the budgetary impact of entitlements, grants, user fees, or loan programs, or the rights and obligations of recipients thereof, and does not raise novel legal or policy issues arising out of legal mandates, the President's priorities, or principles set forth in Executive Order 12866.

Regulatory Flexibility Act

The Department of Agriculture certifies that this rule change will not have a significant impact on a substantial number of small entities as defined in the Regulatory Flexibility Act, Pub. L. No. 96–354, as amended (5 U.S.C. 601, *et seq.*).

Paperwork Reduction Act

In accordance with the Office of Management and Budget (OMB) regulations (5 CFR part 1320) which implement the Paperwork Reduction Act of 1995, Pub. L. 104–13, as amended (44 U.S.C. chapter 35), the information collection and recordkeeping requirements that have been imposed in the management of these programs have been approved by OMB and assigned OMB control number 0518–0024 for the use of facilities or the performance of photography/cinematography at the USNA.

Background

Section 890(b) of the Federal Agriculture Improvement and Reform Act of 1996, Pub. L. 104–127 (1996 Act) expanded the authorities of the Secretary of Agriculture to charge reasonable fees for the use of USNA facilities and grounds. These authorities included the ability to charge fees for temporary use by individuals or groups of USNA facilities and grounds consistent with the mission of the USNA. In addition, authority was granted to charge fees for the use of the USNA for commercial photography and cinematography. Pursuant to the Act, the Agricultural Research Service (ARS) promulgated a fee schedule for the USNA at 7 CFR part 500, subpart B. All rules and regulations noted in 7 CFR part 500, subpart A, Conduct on the U.S. National Arboretum Property, also apply to individuals or groups granted approval to use the facilities and grounds.

This proposed rule change modifies 7 CFR part 500, subparts A and B. The USNA will continue to charge fees for riding its tram service, for use of the grounds and facilities, and for photography and cinematography. The USNA will allow use of its facilities and grounds for activities such as luncheons, dinners, receptions, and similar events in order to provide financial support to the USNA. The Director of the USNA will continue to have discretion to waive fees for non-profit scientific or educational organizations the purposes and interests of which are complementary to the mission of the USNA, such as the Friends of the National Arboretum, the National Bonsai Foundation, and the National Capital Area Federation of Garden Clubs. Even in cases of fee waiver, however, the USNA will seek to recover costs incurred in connection with use of its facilities. Fees generated will be used to defray USNA expenses

or to promote the mission of the USNA. The public will not be charged an admission fee for visiting the USNA.

Revision of Subpart A

Subpart A is proposed to be revised in its entirety although, except for stylistic and editorial changes, no substantive changes are made to sections 500.1, 500.2, 500.4, 500.6, 500.9, and 500.14. Substantive changes to the other sections are as follows:

Section 500.3 Preservation of Property

This section is modified to include a prohibition on open fires, environmental spraying for insect pests, or release of biological agents on the facilities of the USNA. The purpose of this change is to protect the valuable existing plant collections, research projects, and the USNA's ongoing Integrated Pest Management Program.

Section 500.5 Nuisances

This section is amended to limit the decibel level of music at special events.

Section 500.7 Intoxicating Beverages and Narcotics

This section is modified to provide for limited beer and wine service with an approved permit and only at officially approved events when the USNA is closed to the public. It further clarifies that the sale of alcoholic beverages is prohibited.

Section 500.8 Soliciting, Vending, Debt Collection, and Distribution of Handbills

This section is modified to better identify the type of activities that are not allowed, and to identify more clearly the exceptions to the prohibitions that were not included in the earlier version of this rule.

Section 500.10 Pets

This section is modified to clarify pet leash requirements and to prohibit the release of fish, plants, and animals on the grounds of the USNA.

Section 500.11 Vehicular and Pedestrian Traffic

This section is modified to provide for access set up and break down, temporary structures, supplies, and materials used in special events and ceremonies, and to serve notice that illegal parking may result in towing in addition to fine.

Section 500.12 Weapons, Explosives and Open Fires

This section is changed to include a prohibition against the use pyrotechnic devices of any kind.

Section 500.13 Nondiscrimination

This section is modified to conform to the nondiscrimination policy established by the United States Department of Agriculture as set forth in 7 CFR part 15d.

Section 500.15 Penalties and Other Law

This section is modified and updated due to the recodification of title 40 and the creation of the Department of Homeland Security.

Amendments to Subpart B

The fee schedule and associated provisions in subpart B are generally revised as follows:

Fee Schedule for Tram and Tours

The USNA operates a 48-passenger tram (which accommodates 2 wheelchairs) to provide mobile tours throughout the USNA grounds on weekends and holidays. The USNA will continue to charge a fee to all riders as well as the amount to be charged for pre-scheduled group tram tours. Additionally, a fee will be charged for providing tour guides for pre-scheduled non-tram tours. Fee amounts were determined after a survey of similar services provided by other Arboreta and Botanical Gardens and an analysis of costs associated with the program. Fees generated will be used to offset costs or for the purposes of promoting the mission of the USNA. Payment for use of the tram is due at the time of ticket purchase. Payment for pre-scheduled tram tours must be made at least two weeks in advance. Payment for pre-scheduled, non-tram guided tours must be made at least two weeks in advance of the tour date.

Fee Schedule for Use of Facilities and Grounds

The USNA will charge fees for the use of the facilities and grounds for activities that may include receptions, luncheons, dinners, and similar events. The proposed fee schedule is consistent with rates from comparable institutions in the Washington, DC area based upon a survey by USNA of the fees charged by such institutions.

Conditions Governing the Use of Facilities and Grounds

Organizations and others may reserve space with USNA for events and other uses of the USNA. Space also may be reserved through USNA support organizations such as the Friends of the National Arboretum, National Bonsai Foundation, and the National Capital Area Federation of Garden Clubs. Reservation requests need to be made as far in advance as possible, with a minimum of 30 days required for all reservations. The USNA will respond to such requests within 10 working days with information as to whether the requested site is available for use. The USNA will also give notice to prospective users of any planned activities (construction, maintenance, pesticide applications, and any similar activities) that might affect the planned use or event. The USNA will not assume any responsibility for last minute changes due to failure of mechanical systems, severe storms and other weather events, or emergencies relating to security and safety.

A facilities use permit for a specific time and location must be signed and a 50% non-refundable deposit paid at the time of booking. The remaining 50% is due five working days before the event. In the event of building, property or grounds damage or excessive cleaning requirements, additional charges will be billed, and will be due within 30 days of billing.

All users of the USNA shall comply with all Federal and local laws. The USNA is a Federal property under the jurisdiction of United States Department of Agriculture. All activities are subject to Federal rules and regulations governing the buildings and grounds.

No offices, rooms, and hallways beyond the secure doors adjacent to the lobby area of the USNA's Administration Building will be available for use.

Fee Schedule for Use of Facilities and Grounds for Purposes of Photography or Cinematography

The USNA will continue to charge a fee for the use of the facility or grounds for purposes of commercial photography or cinematography. The fees have been established based on comparable opportunities provided by other Arboreta and Botanical Gardens across the nation. Facilities and Grounds are available for use for commercial photography or cinematography at the discretion of the USNA Director. Requests for use should be made at least two weeks in advance of required date. The USNA does not intend to charge fees to the press for photography or cinematography related to stories concerning the USNA and its mission or for other noncommercial, First Amendment activities. Fee payments for use of facilities or grounds or for photography and cinematography must be made in advance of requested date.

Payment Submission Requirements

Unless provided otherwise, all payments due under this subpart must

be made by cash, check, or money order (in U.S. funds). Checks and money orders must be made payable, in U.S. funds, to the U.S. National Arboretum. The USNA will provide receipts to requesters for their records or billing purposes. The USNA is pursuing opportunities to enter an agreement to allow USNA visitors and users to make payment in the form of a credit card. If USNA enters into such an agreement, USNA visitors and users who are assessed user fees may pay those fees with a credit card subject to the terms and conditions of such agreement.

List of Subjects in 7 CFR Part 500

Agricultural research, Federal buildings and facilities, Government property, USNA, Photography, Cinematography, User fees.

For the reasons set out in the preamble, 7 CFR part 500 is proposed to be revised as set forth below:

1. The authority citation is revised to read as follows:

Authority: 20 U.S.C. 196; secs. 2, 4, 62 Stat. 281; sec. 103, 63 Stat. 380; sec. 205(d), 63 Stat. 389.

PART 500—NATIONAL ARBORETUM

Subpart A—Conduct on U.S. National Arboretum Property

Sec.

500.1 General.
500.2 Recording presence.
500.3 Preservation of property.
500.4 Conformity with signs and emergency directions.
500.5 Nuisances.
500.6 Gambling.
500.7 Intoxicating beverages and narcotics.
500.8 Soliciting, vending, debt collection, and distribution of handbills.
500.9 Photographs for news, advertising, or commercial purposes.
500.10 Pets.
500.11 Vehicular and pedestrian traffic.
500.12 Weapons and explosives.
500.13 Nondiscrimination.
500.14 Exceptions.
500.15 Penalties and other law.

§ 500.1 General.

The rules and regulations in this part apply to the buildings and grounds of the U.S. National Arboretum (USNA), Washington, DC, and to all persons entering in or on such property. The Administrator, General Services Administration, has delegated to the Secretary of Agriculture, with authority to further delegate, the authority to make all the needful rules and regulations for the protection of the buildings and grounds of the USNA (34 FR 6406). The Secretary of Agriculture has in turn delegated such authority to the Administrator, Agricultural Research Service (34 FR 7389). The rules and regulations in this part are issued pursuant to such delegations.

§ 500.2 Recording presence.

Admission to the USNA during periods when it is closed to the public will be limited to authorized individuals who may be required to sign the register or display identification documents when requested by the Security Staff, or other authorized individuals.

§ 500.3 Preservation of property.

(a) While at the USNA, it is unlawful to:

(1) Willfully destroy, damage, or remove USNA property or any part thereof;

(2) Set or maintain any open fire on the property of the USNA; or

(3) Apply any type of insecticide or herbicide on the grounds of the USNA, except for USNA employees in the course of their official duties or other persons authorized by the Director.

(b) Persons not employed by USNA are not permitted to bring biological agents of any kind, including but not limited to disease and pest agents of plants, onto the property without written permission of the Director, USNA.

§ 500.4 Conformity with signs and emergency directions.

Persons in and on property of the USNA shall comply with official signs of prohibitory or directive nature and with the directions of authorized individuals.

§ 500.5 Nuisances.

(a) The use of loud, abusive, or otherwise improper language, unwarranted loitering, sleeping, or assembly, the creation of any hazard to persons or things, improper disposal of rubbish, spitting, prurient prying, the commission of any obscene or indecent act, or any other unseemly or disorderly conduct, throwing articles of any kind from a building, and climbing upon any part of a building is prohibited.

(b) Playing of music or creation of other noises of a decibel level high enough to be heard outside of the USNA is prohibited.

§ 500.6 Gambling.

Participating in games for money or other personal property, or the operation of gambling devices, the conduct of a lottery or pool, or the selling or purchasing of numbers tickets, in or on USNA property, is prohibited.

§ 500.7 Intoxicating beverages and narcotics.

(a) Entering USNA property or the operation of a motor vehicle thereon, by a person under the influence of intoxicating beverages or a narcotic drug, is prohibited.

(b) Except as provided in subpart B, possession of or consumption of intoxicating beverages on USNA property is prohibited.

(c) The sale of alcoholic beverages on the grounds of the USNA is prohibited.

(d) The possession of or use of narcotic drugs on the grounds of the USNA is prohibited.

§ 500.8 Soliciting, vending, debt collection, and distribution of handbills.

(a) The following activities are prohibited on USNA grounds:

(1) Soliciting of alms or contributions;

(2) Display or distribution of commercial advertising;

(3) Collecting private debts;

(4) Campaigning for election to any office;

(5) Soliciting and vending for commercial purposes (including, but not limited to, the vending of newspapers, and other publications);

(6) Soliciting signatures on petitions, polls, or surveys (except as authorized by the USNA); and

(7) Impeding ingress to or egress from the USNA are prohibited.

(b) Distribution of material such as pamphlets, handbills, and flyers is prohibited without prior approval of the Director, USNA.

(c) The prohibitions in paragraphs (a) and (b) of this section do not apply to:

(1) Commercial or nonprofit activities performed under contract or concession with the USNA or pursuant to the provisions of the Randolph Sheppard Act;

(2) The solicitation of USNA personnel for contributions for the Combined Federal Campaign (CFC);

(3) National or local drives for funds for welfare, health, and other purposes sponsored or approved by the Agricultural Research Service; or

(4) Personal notices posted by employees on authorized bulletin boards.

§ 500.9 Photographs for news, advertising, or commercial purposes.

Photographs for news purposes may be taken at the USNA without prior permission. Photographs for advertising and commercial purposes may be taken, but only with the prior approval of the Director, USNA and fees may be charged pursuant to § 500.23.

§ 500.10 Pets.

Pets brought upon USNA property must have proper vaccinations and,

except assistance trained animals, must be kept on leash at all times. The release or abandonment of fish, plants, and animals of any kind on USNA grounds is prohibited.

§ 500.11 Vehicular and pedestrian traffic.

(a) Drivers of all vehicles in or on USNA property shall drive only on established roads, shall drive in a careful and safe manner at all times, and shall comply with the signals and directions of the Security Staff and all posted traffic signs.

(b) The blocking of entrances, driveways, walks, loading platforms, or fire hydrants, and parking in designated no parking areas in or on USNA property is prohibited.

(c) Except in emergencies, parking in or on USNA property in other than designated areas is not allowed without a permit. Parking without authority, parking in unauthorized locations or in locations reserved for other persons, or contrary to the direction of posted signs, is prohibited.

(d) USNA approval is required for all vehicles needed for access setup and breakdown activities relating to special events, ceremonies, or related activities. Off-road routes will be determined by the USNA.

(e) In addition to the penalties provided in § 500.15, vehicles parked in violation of this section are subject to being towed and the cost of such towing being assessed to the owner of such vehicle.

(f) This section may be supplemented from time to time, by the issuance and posting of specific traffic directives as may be required, and when so issued and posted such directives shall have the same force and effect as if incorporated in this subpart.

§ 500.12 Weapons and explosives.

(a) No person while in or on USNA property shall carry firearms, other dangerous or deadly weapons, or explosives, either openly or concealed, except for authorized official purposes.

(b) No person while in or on the USNA shall ignite fireworks or other pyrotechnical devices.

§ 500.13 Nondiscrimination.

The USNA is subject to the policy of nondiscrimination in programs or activities conducted by the United States Department of Agriculture as set forth in 7 CFR part 15d.

§ 500.14 Exceptions.

The Administrator, Agricultural Research Service, may in individual cases make prior, written exceptions to the rules and regulations in this part if it is determined to be not adverse to the public interest.

§ 500.15 Penalties and other law.

Whoever shall be found guilty of violating the rules and regulations in this subpart is subject to fine under title 18, United States Code, or imprisonment of not more than 30 days, or both (see 40 U.S.C. 1315(c)). Nothing contained in the rules and regulations in this part shall be construed as abrogating or authorizing the abrogation of any other regulations or any Federal law or any laws and regulations of the District of Columbia that may be applicable.

Subpart B—Fee Schedule for Certain Uses of National Arboretum Facilities and Grounds.

Sec.

500.20 Scope.
500.21 Fee schedule for tram and tours.
500.22 Fees and conditions for use of facilities and grounds.
500.23 Fees for photography and cinematography on grounds.
500.24 Fee schedule.
500.25 Payment of fees.

§ 500.20 Scope.

This subpart sets forth schedules of fees for temporary use by individuals or groups of United States National Arboretum (USNA) facilities and grounds. This subpart also sets forth schedules of fees for the use of the USNA for commercial photography and cinematography. Fees generated will be used to offset costs of services or for the purposes of promoting the mission of the USNA. All rules and regulations noted in 7 CFR 500, subpart A—Conduct on the U.S. National Arboretum Property, will apply to individuals or groups granted approval to use the facilities and grounds for the purposes specified in this subpart.

§ 500.21 Fee schedule for tram and tours.

The USNA provides tours of the USNA grounds in a 48-passenger tram (accommodating 2 wheelchairs). The fee is as follows: $4.00 per adult, $3.00 per senior citizen or Friend of the National Arboretum, and $2.00 per child ages 4 through 16. Children under 4 sharing a seat with an adult will not be charged. Pre-scheduled tram tours for groups may be arranged for a set fee of $125.00. Additionally, a tour guide may be pre-arranged to provide a non-tram tour for the fee of $50 per hour. Promotional programs offering discounted fees for these programs may be instituted at the discretion of the USNA. Payment for use of the tram is due at the time of ticket purchase. Payment for pre-scheduled tram tours must be made at least two weeks in advance. Payment for pre-scheduled, non-tram guided tours must be made at least two weeks in advance of the tour date.

§ 500.22 Fees and conditions for use of facilities and grounds.

(a) *Fee requirement.* (1) The USNA will charge a fee for temporary use by individuals or groups of USNA facilities and grounds. Fees for specific sites are listed in § 500.24.

(2) Non-profit scientific or educational organizations whose purposes and interests are complementary to the mission of the USNA and which substantially support the mission and purpose of the USNA (*e.g.*, Friends of the National Arboretum) may be exempted from the fee for use of USNA facility or grounds requirement of this subpart by the Director, but still must reimburse the USNA for its costs, including setup, clean-up, security, and other costs as applicable.

(3) A Half Day usage is defined as 4 hours or less; a Whole Day is defined as more than 4 hours in a day. In all cases, usage includes all time during which a venue is committed, including time used to set up before and clean up after an event. For after-hours usage of sites or facilities, an additional $40/hour will be added for supervision/security, with higher amounts required for sites or facilities that are more sensitive.

(b) *Reservations.* (1) The USNA will be available only on a limited basis at the discretion of the Director of the USNA, and not during public access hours, during the peak visitation weekends in April, May, and October.

(2) Facilities and grounds are available by reservation at the discretion of the USNA and may be available to individuals or groups for uses that are consistent with the mission of the USNA. Agency initiatives may be granted first priority. Offices and hallways beyond secured doors will not be available for use.

(3) Reservations to use USNA facilities and grounds may be made directly with the USNA. To ensure consideration, reservation requests should be made as far in advance of the need as possible with a minimum of 30 calendar days prior to the date of use required for all reservations.

(4) The USNA will respond to reservation requests within 10 working days with information as to whether the requested site is available for use. The USNA will also give notice to the prospective user of any planned activities (construction, maintenance, pesticide applications, and any similar

activities) that might affect the planned use or event.

(5) A 50% non-refundable deposit will be due at the time of a booking in order to reserve a specific date and location. The remaining 50% is due five working days prior to the event.

(c) *Terms and conditions of use.* (1) The USNA provides space, water, and electrical hookup when available, and restrooms where available. Users must provide all tents, tables, chairs, trash receptacles, or other property required for the scheduled event. Users must remove all trash from the property at the conclusion of the event. Users must remove all tents, tables and chairs and other property no later than 5:00 p.m. of the day following the event. The USNA will charge a facility use and break down fee of $500.00 per day for each day following the deadline to remove temporary facilities and equipment. The USNA will not store temporary facilities or equipment for users.

(2) Users must abide by USNA vehicle regulations in § 500.11 including the requirement to obtain USNA approval whenever off road access is required for setup.

(3) The USNA will not assume any responsibility for last minute changes due to failure of current mechanical systems, severe storms and other weather events, emergencies relating to security and safety.

(4) Some events that involve bringing animals and certain plants onto the USNA property may not be compatible with the plant research, display, and education mission of the USNA. Such events will be evaluated on a case-by-case basis and exceptions may be made by the Director of the USNA.

(5) Music and bands will be permitted but the decibel level of music should not be loud enough to be heard outside the boundaries of the USNA.

(6) In the event of building, property or grounds damage or excessive cleaning requirements, charges will be billed and will be due within 30 days of billing. Damages to plants, grounds, facilities or equipment will be assessed on a value based on replacement cost, including labor, plus a 10% administrative fee.

(7) Upon prior request, the Director may approve the consumption of beer and wine during uses of USNA pursuant to this section. Such permission will not be granted during times when USNA is open to the public. Director approval shall be conditioned upon compliance by users and by any of their agents or contractors, with all applicable provisions of the District of Columbia Code governing sale and consumption of alcoholic beverages, including the rules of the District of Columbia Department of Consumer Affairs, Alcoholic Beverage Regulation Administration.

(8) All users of the USNA pursuant to this subpart, as well as all those contracting with such users of the USNA, shall comply with all Federal and local laws.

(9) The USNA is a Federal property under the jurisdiction of the United States Department of Agriculture. All activities are subject to Federal rules and regulations governing the use of public buildings and grounds.

(10) The USNA will not be responsible for any damage or loss suffered by an individual, group, or their contractor during a permitted event at the USNA.

(11) The Director may impose additional incidental terms and conditions concerning the use of the USNA facilities consistent with this part.

§ 500.23 Fees for photography and cinematography on grounds.

The USNA will charge a fee for the use of the facility or grounds for purposes of commercial photography or cinematography as specified in § 500.24. Facilities and grounds are available for use for commercial photography or cinematography at the discretion of the USNA Director. Requests for use should be made a minimum of two weeks in advance of the required date. The USNA will charge for supervision costs at the rate of $40.00 per hour, in addition to the fees listed below. The USNA Director may waive fees for photography or cinematography conducted for the purpose of disseminating information to the public regarding the USNA and its mission or for the purpose of other noncommercial, First Amendment activity. The USNA will charge a non-refundable application fee of $30 for commercial photography or cinematography. If the application is approved and fees will be incurred, the application fee will be applied to the total fee due. No other credits will be given for the application fee. Fee payments for use of facilities or grounds or for photography and cinematography must be made in advance of services being rendered. These payments are to be made in the form of a check or money order.

§ 500.24 Fee Schedule.

Event by category	Fee*	Unit	Notes
USNA Terrace	$12,000	Per Day	Up to 240 seated or 300 standing.
USNA Herb Garden	10,000	Per Day	Entrance Circle, Rose and Knot Garden: Up to 48 seated or 100 standing; cannot be tented Specialty Garden: Up to 200 standing; may not be tented.
USNA Meadow	15,000	Per Day	Up to 600 seated or 1000 standing.
USNA Administration Building Lobby	2,000	Per Day	Up to 150 standing.
USNA Auditorium	2,500	Per Day	Up to 120 seated or 200 standing.
Friendship Garden	1,000	Per Day	Up to 60 seated or 100 standing.
National Capitol Columns	10,000	Per Day	Up to 190 seated or 400 standing; cannot be tented; includes night lighting of columns.
Bonsai Museum International Pavilion and Upper Courtyard.	10,000	Per Day	Up to 120 seated or 200 standing.
Bonsai Museum Chinese Pavilion	10,000	Per Day	Up to 50 seated or 100 standing.
Dogwood Collection Allee & Circle	3,000	Per Day	Up to maximum of 150 people at event; reserved for marriage ceremonies and accompanying receptions only.
M Street Picnic Area	5,000	Per Day	Up to 200 seated or standing; paved or grassy areas can be tented.
Classroom	125 50	Per Day Per Half Day.	Standard set-up with 40 chairs; includes microphone/lectern, screen, projection stand, two flip charts (no paper) and trashcan.

Event by category	Fee*	Unit	Notes
Still Photography:			
Individual	No Charge		For personal use only; includes hand-held cameras, recorders and small non-commercial tripods.
Commercial	$30	Application Fee	All. professional photography; photographs for which a fee will be received or which are for other than personal use.
	$250 plus Supervisor	Per Half Day.	
Cinematography:			
Set Preparation	30	Application Fee	Set up; no filming.
	$250 plus Supervision	Per Whole Day.	
Filming	$1,500 to $3,900	Per Whole Day	Sliding scale based on number of people in cast and crew and number of pieces of equipment from 45 people and 6 pieces of equipment = $1,500 to 200 people = $3,900; 5 people with carry on equipment = same as still photography.
Slide Production	$100	Per Image	Purchase of USNA photos/slides.

*Fees includes only access to sites; additional security charges may be necessary depending upon the site and the number of people participating.

§ 500.25 Payment of fees.

(a) Unless provided otherwise, all payments due under this subpart must be made by cash, check, or money order (in U.S. funds). Checks and money orders for payment of any fees imposed under this part are to be made payable, in U.S. funds, to the ''U.S. National Arboretum.'' The USNA may provide receipts to requesters for their records or billing purposes. If the USNA enters into an agreement to allow USNA visitors and users to make payment in the form of a credit card, USNA visitors and users who are assessed user fees may pay those fees with a credit card subject to the terms and conditions of such agreement.

(b) Any fees that become past due shall be collected in accordance with 7 CFR part 3.

Done at Washington, DC, this 17th day of November, 2004.

Edward B. Knipling,

Administrator, Agricultural Research Service.

[FR Doc. 04–27394 Filed 12–17–04; 8:45 am]

BILLING CODE 3410–03–P

AGENCY FOR INTERNATIONAL DEVELOPMENT

22 CFR Part 226

[AID Reg 226]

RIN 0412–AA55

Administration of Assistance Awards to U.S. Non-Governmental Organizations; Marking Requirements

AGENCY: United States Agency for International Development.

ACTION: Notice of proposed rulemaking.

SUMMARY: USAID proposes to amend the primary regulation governing administration of USAID funded assistance awards, by adding a provision requiring marking with the USAID Standard Graphic Identity, of commodities, programs, projects, activities and public communications implemented under USAID funded assistance awards or subawards. While USAID currently requires its contractors to mark US-funded foreign assistance, that requirement does not apply to assistance awards. The purpose of this proposed regulatory addition is to extend USAID marking requirements to assistance awards in order to bring USAID regulations in line with section 641 of the Foreign Assistance Act of 1961, as amended, which requires that ''[p]rograms under this Act shall be identified appropriately overseas as 'American Aid,' '' as well as to advance the Administration's efforts to ensure that aid recipients overseas understand that all aid, including assistance awards, is foreign assistance from the American taxpayer.

DATES: Submit comments on or before February 3, 2005.

ADDRESSES: Because security screening precautions have slowed the delivery and dependability of surface mail to USAID/Washington, USAID recommends sending all comments by electronic mail or by fax to the e-mail address or fax number listed directly below (please note, all comments must be in writing to be reviewed).

Electronic Access and Filing. You may submit written electronic comments by sending electronic mail [e-mail] to: *markingnprm@usaid.gov.* Please submit comments as a Microsoft Word file avoiding the use of any special characters and any form of encryption.

FAX. You may submit written comments by FAX to 202–216–3058, addressed to: ''C/O John Niemeyer, Attorney Advisor, Office of the General Counsel, USAID/Washington.''

Surface Mail (again, not advisable due to security screening): John Niemeyer, Attorney Advisor, Office of the General Counsel, Room 6.6.34, USAID/Washington, 1300 Pennsylvania Avenue, NW., Washington, DC 20523.

FOR FURTHER INFORMATION CONTACT: John Niemeyer, telephone (202) 712–4776; e-mail *markingnprm@usaid.gov.*

SUPPLEMENTARY INFORMATION: This proposed rule has been reviewed by the Office of Management and Budget (OMB). The period for comments has been established at forty-five (45) days due to the urgency and high visibility of United States Government public diplomacy initiatives, and the shortness and lack of complexity of the proposed rule.

Background

The marking of foreign aid as foreign assistance from the American taxpayer was first required during the Marshall Plan when Congress became concerned that the Soviet Union was taking credit for the poorly marked U.S. foreign aid donations to European countries. USAID's framework legislation, the Foreign Assistance Act of 1961, as amended, section 641 requires that all programs, including assistance awards, be identified appropriately overseas as ''American aid.'' While USAID has required its contractors to mark US-funded foreign assistance, that requirement has not been extended to assistance awards. A recent State Department report, ''Changing Minds,

Winning Peace: a New Strategic Direction for U.S. Public Diplomacy in the Arab World,'' both commends and encourages USAID to continue to ''become more forthright about branding its activities, so recipients know that they are receiving contributions from the American People.'' The American People, through USAID, provide billions of dollars of foreign assistance every year in the form of grants and cooperative agreements for which marking has not been required and for which the United States Government and the American taxpayer generally receive no acknowledgement or credit. The proposed rule is intended to ensure that the United States Government and American taxpayer receive credit for funding assistance awards by requiring recipients of USAID-funded assistance awards to mark USAID funded commodities, programs, projects, activities and public communications with the USAID Standard Graphic Identity.

As set forth below, marking is encouraged but not required when USAID is funding less than 10% of the total cost and the total cost is less than $3,000,000; marking of a size and prominence equal to that of other donors is required when USAID is funding more than $300,000 dollars or 10% to 49% of the total cost; and marking requirements are fully applicable when USAID is funding 50% or more of the total cost. In order to ensure that marking is done in a safe manner, USAID mission directors in the field are authorized to waive marking requirements if USAID-required marking would pose compelling political, safety or security concerns. All mission director decisions concerning waivers will be made on the basis of the same political, safety or security information used in decisions about the safety and security of United States Government employees in the host country (the so-called ''no double standard'' policy). USAID contractors have been marking USAID funded commodities, programs, projects and activities for years without any safety issues to date.

Also as set forth below, USAID also encourages, but does not require, recipients of assistance awards to permit use the USAID logo on employee business cards and other personally identifying material, so long as such employees do not identify themselves as employees of USAID, the United States Government, or the United States Government diplomatic mission, and do not claim any diplomatic privileges and immunities. USAID takes the following action as part of the effort to ensure that the American people are credited for their generosity in providing assistance, and to improve the United States Government's public diplomacy.

List of Subjects in 22 CFR Part 226

Foreign aid, Non-profit organizations.

For the reasons set forth above, USAID proposes to amend 22 CFR part 226 as follows:

PART 226—ADMINISTRATION OF ASSISTANCE AWARDS TO U.S. NON-GOVERNMENTAL ORGANIZATIONS

1. The authority citation for part 226 is revised to read as follows:

Authority: 22 U.S.C. 2381(a) and 2401.

2. Amend § 226.2 by adding the following definitions:

§ 226.2 Definitions

* * * * *

Commodities means any material, article, supply, goods or equipment.

* * * * *

Public communications include, but are not limited to, studies, reports, audio visual productions and other informational products; applications, forms, press and promotional materials used in connection with USAID funded programs, projects or activities, including signage and plaques; Web sites/Internet activities; and events such as training courses, conferences, seminars, press conferences and the like.

* * * * *

Standard graphic identity (Identity) means the USAID logo and brandmark, which will be provided free of charge to recipients of USAID funded grants or cooperative agreements or other assistance awards or subawards.

* * * * *

USAID Partner Branding Guide means a separate, USAID produced publication that will be provided free of charge to recipients of USAID funded grants or cooperative agreements or other assistance awards or subawards, and which details branding guidelines for USAID funded commodities, programs, projects, activities and public communications.

3. Add § 226.91 to subpart F, to read as follows:

§ 226.91 Marking.

(a) USAID policy is that all commodities, programs, projects, activities and public communications funded by a USAID funded grant or cooperative agreement or other assistance award or subaward must be marked appropriately with the USAID Identity as follows:

(1) If USAID is funding less than 10% of the total cost of the program, project, activity or public communication and the total cost is less than $3,000,000 as determined by USAID, marking is recommended but not required;

(2) If USAID is funding more than $300,000 dollars or 10% to 49% of the total cost of the program, project, activity or public communication as determined by USAID, that program, project, activity or public communication must be marked appropriately with the USAID Identity of a size and prominence at least equivalent to that of any marking of any other donor or implementing partner of the USAID partially funded program, project, activity or public communication, as set forth in the USAID Partner Branding Guide to be provided free of charge to the recipient of a USAID funded grant or cooperative agreement or other assistance award or subaward; and

(3) If USAID is funding 50% or more of the total cost of the program, project, activity or public communication as determined by USAID, USAID marking requirements apply to their full extent, as set forth in the USAID Partner Branding Guide to be provided free of charge to the recipient of a USAID grant or cooperative agreement or other assistance award or subaward. These requirements ''flow down'' to recipients of subawards.

(b) All commodities financed by USAID, including commodities or equipment provided under humanitarian assistance or disaster relief programs, and all other equipment, supplies and other materials funded by USAID, and their export packaging, must be marked appropriately with the USAID Identity.

(c) Program, project or activity sites funded by USAID, including visible infrastructure projects (roads, bridges, buildings, houses) or other programs, projects, activities which are physical in nature (agriculture, forestry, water management), must be marked appropriately with the USAID Identity. Temporary signs or plaques should be erected early in the construction or implementation phase. When appropriate, a permanent sign, plaque or other marking must be installed.

(d) Technical assistance, studies, reports, audio visual productions and other promotional or informational products, and Web sites/Internet activities funded by USAID must be marked appropriately with the USAID Identity and must contain the following disclaimer:

This study/report/audio/visual product has been produced, and/or its

contents created, with the financial assistance of USAID. The contents of this study/report/audio/visual product are the responsibility of <name of organization> and do not necessarily reflect the views of USAID or the United States Government.

(e) Events financed by USAID such as training courses, conferences, seminars, exhibitions, fairs, workshops, press conferences and other public communications, must be marked appropriately with the USAID Identity. Unless directly prohibited and as appropriate to the surroundings, recipients should display additional materials such as signs and plaques with USAID and United States Government symbols. In circumstances in which the USAID identity cannot be displayed visually, recipients are encouraged to otherwise acknowledge USAID funding and support.

(f) USAID Mission Directors may waive USAID marking requirements for each USAID funded commodity, program, project, activity or public communication, or in exceptional circumstances may make a blanket waiver by sector, region or country, for up to six months from the date of the waiver, if the Mission Director determines that otherwise USAID-required marking would pose compelling political, safety or security concerns. The waiver determination must be made in a manner commensurate with the United States Government's ''no double standard'' policy, *i.e.*, on the basis of the same information that applies to determinations of the safety and security of U.S. Government employees in the host country. When making a waiver determination, Mission Directors should consider whether or not to recommend to USAID contractors, grantees and other partners that in addition, they remove their organization's own logos or markings, as part of the determination of the existence of compelling political, safety, or security concerns. Waiver determinations may be extended beyond the initial six months after mission director consultation with the responsible USAID Assistant Administrator.

(g) The USAID Partner Branding Guide, specific marking instructions, and information about Mission Director approved waivers (if any) may be obtained from the Cognizant Technical Officer or the Agreements Officer, who will consult with award recipients on USAID marking requirements after the making of an award. Recipients of USAID-funded grant or cooperative agreement or other assistance award or subaward should retain copies of any specific marking instructions or waivers in their project, program or activity files. Cognizant Technical Officers will be assigned responsibility to monitor marking requirements.

(h) The marking provision is a material provision of USAID grants or cooperative agreements or other assistance awards or subawards. In cases where the marking requirements have not been complied with, the Agreements Officer will initiate corrective action. Such action may involve informing the recipient of a USAID grant or cooperative agreement or other assistance award or subaward of instances of noncompliance and requesting that it carry out its responsibilities as set forth in this provision. Major or repeated non-compliance with the marking requirements will trigger a notice of non-compliance with a material provision of the USAID grant or cooperative agreement or other assistance award or subaward and an opportunity to cure promptly, with possible termination if the recipient does not address the material noncompliance with marking requirements.

(i) Non-retroactivity: These marking requirements apply to any obligation of USAID funds, including incremental funding, as of [USAID will insert the effective date of this provision in the final rule]. In the event of a waiver of marking requirements, the marking requirements shall apply from the date forward that the waiver is rescinded. In the event of the rescinding of a waiver after the completion of USAID funded programs, projects, activities or public communications, the USAID mission or operating unit with initial responsibility to administer the marking requirements shall make a cost benefit analysis as to requiring USAID marking requirements after the completion of the affected programs, projects, activities or public communications.

(j) The USAID Identity, the USAID Partner Branding Guide, and other marking materials and guidance will be provided at no cost to recipients of USAID grants, cooperative agreements or other assistance awards or subawards. Additional costs associated with marking requirements will be met by USAID if reasonable, allowable and allocable under the cost principles of OMB Cost Circular A–110. The standard cost reimbursement provisions of the grant, cooperative agreement, other assistance award or subaward should be followed when applying for reimbursement of additional marking costs.

(k) If recipients of USAID grants or cooperative agreements or other assistance awards or subawards permit their employees to engage in public speaking, writing, teaching or promotion efforts such as press conferences concerning the USAID funded program, project, activity or public communication, such recipients must have an organizational policy that requires the organization and all its employees to state that they are not representing USAID or the United States Government and that their public speaking, writing, teaching or promotional efforts do not necessarily reflect the views of USAID or of the United States Government.

(l) If recipients of USAID funded grants and cooperative agreements or other assistance awards or subawards have an organizational policy permitting employee use of the USAID Standard Graphic Identity on business cards or other personally identifying material, such a policy must require employee business cards or other personally identifying material to bear the USAID Identity along with the legend ''USAID grantee,'' while prohibiting employees from claiming status as a USAID employee, United States Government employee, or member of the United States diplomatic mission.

Dated: December 15, 2004.

Fred W. Schieck,

Deputy USAID Administrator.

[FR Doc. 04–27791 Filed 12–17–04; 8:45 am]

BILLING CODE 6116–01–P

DEPARTMENT OF THE TREASURY

Office of the Secretary

31 CFR Part 10

[REG–159824–04]

RIN 1545–BE13

Regulations Governing Practice Before the Internal Revenue Service

AGENCY: Office of the Secretary, Treasury.

ACTION: Notice of proposed rulemaking and notice of public hearing.

SUMMARY: This notice proposes amendments to the regulations governing practice before the Internal Revenue Service (Circular 230). These regulations affect individuals who are eligible to practice before the IRS. The proposed modifications set forth standards for *State or local bond opinions.* This document also provides notice of a public hearing regarding the proposed regulations.

DATES: Written or electronically generated comments and outlines of topics to be discussed at the public hearing scheduled for March 22, 2005, must be received by March 1, 2005.

ADDRESSES: Send submissions to: CC:PA:LPD:PR (REG–159824–04), room 5203, Internal Revenue Service, POB 7604, Ben Franklin Station, Washington, DC 20044. Submissions may be hand delivered Monday through Friday between the hours of 8 a.m. and 4 p.m. to: CC:PA:LPD:PR (REG–159824–04), Courier's Desk, Internal Revenue Service, 1111 Constitution Avenue, NW., Washington, DC. Alternatively, taxpayers may submit comments electronically via the IRS Internet site at: *http://www.irs.gov/regs.* The hearing will be held in the Internal Revenue Service auditorium on the seventh floor.

FOR FURTHER INFORMATION CONTACT: Concerning issues for comment, Heather L. Dostaler at (202) 622–4940 or Vicki Tsilas at (202) 622–3980; concerning submissions of comments, Treena Garrett of the Publications and Regulations Branch at (202) 622–7180 (not toll-free numbers).

SUPPLEMENTARY INFORMATION:

Paperwork Reduction Act

The collection of information contained in this notice of proposed rulemaking has been submitted to the Office of Management and Budget for review in accordance with the Paperwork Reduction Act of 1995 (44 U.S.C. 3507). Comments on the collection of information should be sent to the Office of Management and Budget, Attn: Desk Officer for the Department of the Treasury, Office of Information and Regulatory Affairs, Washington, DC 20503, with copies to the Internal Revenue Service, Attn: IRS Reports Clearance Officer, SE:W:CAR:MP:T:T:SP, Washington, DC 20224. Comments on the collection of information should be received by February 18, 2005. Comments are specifically requested concerning:

Whether the proposed collection of information and retention is necessary for the proper performance of the Office of Professional Responsibility, including whether the information will have practical utility;

The accuracy of the estimated burden associated with the proper collection and retention of information (see below);

How the quality, utility, and clarity of the information to be collected may be enhanced;

How the burden of complying with the proposed collection and retention of information may be minimized, including through the application of automated collection techniques or other forms of information technology; and

Estimates of capital or start-up costs and costs of operation, maintenance, and purchase of services to provide information.

The collection of information in these proposed regulations is in § 10.39. This information is required to ensure practitioners comply with minimum standards when writing a State or local bond opinion. This information will assist the Commissioner, through the Office of Professional Responsibility, to ensure that practitioners properly advise taxpayers regarding state or local bonds. The collection of information is mandatory. The likely recordkeepers and respondents are individuals.

To comply with § 10.39, a practitioner may provide a single *State or local bond opinion* or may provide a combination of documents, but only if the documents, taken together, satisfy the requirements of § 10.39. The estimates below are based on an average of 10 opinions given by a practitioner per year with an average increased time of 1 to 3 hours per opinion.

Estimated total record keeping and reporting burden is 30,000 hours.

Estimated annual burden per practitioner varies from 10 to 30 hours, depending on individual circumstances, with an estimated average of 20 hours.

Estimated number of affected practitioners is 1,500.

Estimated annual frequency of responses (providing a *State or local bond opinion* or a combination of documents) is on occasion.

An agency may not conduct or sponsor, and a person is not required to respond to a collection of information unless it displays a valid control number assigned by the Office of Management and Budget.

Books or records relating to a collection of information must be retained as long as their contents may become material in the administration of any internal revenue law. Generally, tax returns and tax return information are confidential, as required by section 6103 of the Internal Revenue Code.

Background

Section 330 of title 31 of the United States Code authorizes the Secretary of the Treasury to regulate the practice of representatives before the Treasury Department. The Secretary has published the regulations governing standards of practice in Circular 230 (31 CFR part 10). Municipal bond opinions have been excluded from the standards for tax shelter opinions since the Treasury Department and the IRS first published standards for tax shelter opinions in Circular 230. On December 30, 2003, the Treasury Department and the IRS proposed amendments to the standards of practice that would have eliminated the exclusion for municipal bond opinions. *See* 68 FR 75186. Public comments were submitted in response to the proposed amendments addressing the special characteristics of the market for municipal bond opinions.

After careful consideration, the Treasury Department and the IRS have concluded that practitioners rendering opinions concerning the tax treatment of municipal bonds should be subject to the same professional standards that are applicable to other practitioners. Recognizing the special characteristics of the bond market, the Treasury Department and the IRS are proposing regulations that provide standards of practice for practitioners rendering municipal bond opinions.

The proposed regulations are substantially similar to the standards of practice for covered opinions that were promulgated on December 20, 2004, which included final regulations providing best practices for tax advisors, minimum standards for covered opinions and other written advice and procedures to ensure compliance with the minimum standards. Under the final regulations, a practitioner providing a *covered opinion* must comply with the minimum standards set forth in § 10.35. Specifically, a practitioner providing a *covered opinion* must: (1) identify and ascertain all relevant facts; (2) relate the applicable law to the relevant facts; (3) evaluate each significant Federal tax issue; and (4) provide an overall conclusion. In addition, *covered opinions* may be required to contain certain disclosures provided in § 10.35(e), if applicable. Under § 10.35, the definition of a covered opinion excludes State or local bond opinions. The definition of a *State or local bond opinion* contemplates opinions that issuers routinely receive at the time bonds are issued. Specifically, a *State or local bond opinion* is written advice that is included in the offering materials for the issuance of a State or local bond and that concerns only the excludability of interest on a State or local bond from gross income under section 103, the application of section 55, the status of the bond as a qualified tax-exempt obligation under section 265(b)(3), the status of the bond as a qualified zone academy bond under section 1397E, or any combination of these issues. Offering materials include any written material delivered to a purchaser of a State or local bond in connection with

the issuance of the bond in a private or public placement (bond offering materials).

Explanation of Provisions

Under § 10.35(b)(2)(ii)(B)(*2*), a *covered opinion* does not include a *State or local bond opinion.* Under proposed § 10.35(b)(9), a *State or local bond opinion* is written advice, included in bond offering materials for the issuance of a State or local bond, if (1) the written advice as to Federal tax matters addressed in the bond offering materials consists only of advice that concerns specified issues under section 103, section 55, section 265(b)(3), or section 1397E, or any combination of those issues; and (2) the practitioner separately provides to the issuer of the bond, and includes in the transcript of proceedings if one is prepared, written advice that satisfies the requirements set forth in § 10.39.

An opinion is a *State or local bond opinion* even if the written advice addresses matters not directly related to a Federal tax issue, *e.g.*, a State law issue. An opinion also is a *State or local bond opinion* if the opinion is redelivered unchanged, *e.g.*, if the opinion is redelivered with a qualified tender bond that is tendered to the remarketing agent and remarketed. If the *State or local bond opinion* with respect to that bond issue is changed or otherwise updated after bonds are issued, the altered opinion is not a *State or local bond opinion,* and is subject to the requirements of § 10.35.

The Treasury Department and the IRS recognize the special characteristics of the market for municipal bonds and are proposing amendments to the requirements of Circular 230 that take into account these characteristics. The manner in which practitioners provide State or local bond opinions suggests that the form of these bond opinions should be more flexible than § 10.35 permits. The proposed regulations exclude a *State or local bond opinion* from the requirements of § 10.35, if the practitioner provides the issuer with separate written advice that satisfies the requirements of § 10.39.

Proposed § 10.39 sets forth the minimum requirements for a *State or local bond opinion.* Although the minimum requirements are substantially similar to those of § 10.35(c), § 10.39 is tailored to take into account the customary practice and special circumstances of the market for municipal bonds. Furthermore, the proposed regulations provide practitioners flexibility in determining how the separate written advice should be conveyed. The practitioner may provide the separate written advice in a tax certificate that customarily would be prepared for inclusion in the transcript of proceedings, or in a tax certificate and an additional memorandum or letter, or in any other combination of documents that are made available to the issuer and included in the transcript of proceedings, if one is prepared. The requirements for all *State or local bond opinions* include: (1) Identifying and considering all relevant facts and not relying on unreasonable factual assumptions or unreasonable representations; (2) relating the applicable law (including potentially applicable judicial doctrines) to the relevant facts and not relying on any unreasonable legal assumptions, representations or conclusions; and (3) considering all significant Federal tax issues relevant to reaching the overall conclusion with respect to the Federal tax treatment of the bonds and reaching a conclusion, supported by the facts and the law, with respect to each significant Federal tax issue. As provided in § 10.35(b)(3), a Federal tax issue is significant if the Internal Revenue Service has a reasonable basis for a successful challenge and its resolution could have a significant impact, whether beneficial or adverse and under any reasonably foreseeable circumstance, on the overall Federal tax treatment of the transaction(s) or matter(s) addressed in the opinion.

A practitioner must not base the written advice on an assumption or factual representation, statement or finding of any person unless the practitioner has exercised due diligence in identifying and ascertaining the relevant facts. Even if a third party has certified a representation, the practitioner is responsible for exercising due diligence. For example, a practitioner may not rely on a representation, certified or otherwise, to conclude that the requirements of the safe harbor for establishing the fair market value of a guaranteed investment contract in 26 CFR 1.148–5(d)(6)(iii) were met if the representation does not include a specific description of how those requirements were satisfied or if the practitioner knows or should know that the representation was incorrect or incomplete.

Proposed § 10.39 permits a practitioner to incorporate the facts, factual assumptions, and findings, representations and statements of any person by reference to another document, such as a tax certificate, provided that the document is included in the transcript of proceedings. Similarly, the legal analysis may be appended or included in a tax certificate or similar document, provided that it is clear that the practitioner provided the written advice. Unlike § 10.35(e) with respect to covered opinions, proposed § 10.39 does not require any disclosures in the written advice.

Proposed §§ 10.35(b)(9) and 10.39 will require that the written advice the practitioner is required to provide separately to the issuer of a state or local bond be included in the transcript of proceedings if one is prepared or in a document available to the issuer if no transcript is prepared. Inclusion of the written advice in the transcript of proceedings is intended to ensure that the practitioner's written advice is made available to the issuer and is intended to be consistent with the current practice of including the tax certificate and other documents supporting the State or local bond opinion in the transcript of proceedings. The Treasury Department and the IRS request comments regarding this requirement.

Proposed Effective Date

Consistent with Announcement 2004–29 (2004–17 I.R.B. 828) (April 26, 2004), these proposed regulations will be applicable no sooner than 120 days after the final regulations are published in the **Federal Register**.

Special Analyses

It has been determined that this notice of proposed rulemaking is not a significant regulatory action as defined in Executive Order 12866. Therefore, a regulatory assessment is not required. It is hereby certified that these regulations will not have a significant economic impact on a substantial number of small entities. Persons authorized to practice before the IRS have long been required to comply with certain standards of conduct. Therefore, a regulatory flexibility analysis under the Regulatory Flexibility Act (5 U.S.C. chapter 6) is not required. Pursuant to section 7805(f) of the Internal Revenue Code, this notice of proposed rulemaking will be submitted to the Chief Counsel for Advocacy of the Small Business Administration for comment on its impact on small businesses.

Comments and Public Hearing

Before the regulations are adopted as final regulations, consideration will be given to any written comments and electronic comments that are submitted timely to the IRS. The Treasury Department and the IRS specifically request comments on the clarity of the proposed regulations and how they can be made easier to understand. All comments will be available for public inspection and copying.

The public hearing is scheduled for March 22, 2005, at 10 a.m., and will be held in the Internal Revenue Service auditorium on the seventh floor. Due to building security procedures, visitors must enter at the Constitution Avenue entrance. All visitors must present photo identification to enter the building. Visitors will not be admitted beyond the immediate entrance area more than 30 minutes before the hearing starts. For information about having your name placed on the building access list to attend the hearing, see the **FOR FURTHER INFORMATION CONTACT** section of this preamble.

The rules of 26 CFR 601.601(a)(3) apply to the hearing. Persons who wish to present oral comments at the hearing must submit written or electronic comments and submit an outline of the topics to be discussed and the time to be devoted to each topic by March 1, 2005. A period of 10 minutes will be allocated to each person for making comments.

An agenda showing the scheduling of the speakers will be prepared after the deadline for receiving outlines has passed. Copies of the agenda will be available free of charge at the hearing.

Drafting Information

The principal authors of the regulations are Heather L. Dostaler and Brinton T. Warren of the Office of the Associate Chief Counsel (Procedure and Administration), Administrative Provisions and Judicial Practice Division, and Vicki Tsilas of the Office of the Associate Chief Counsel (Tax Exempt/Government Entities).

List of Subjects in 31 CFR Part 10

Administrative practice and procedure, Lawyers, Accountants, Enrolled agents, Enrolled actuaries, Appraisers.

Proposed Amendments to the Regulations

Accordingly, 31 CFR part 10 is proposed to be amended as follows.

PART 10—PRACTICE BEFORE THE INTERNAL REVENUE SERVICE

Paragraph 1. The authority citation for subtitle A, part 10 is revised to read as follows:

Authority: Sec. 3, 23 Stat. 258, secs. 2–12, 60 Stat. 237 *et. seq.*; 5 U.S.C. 301, 500, 551–559; 31 U.S.C. 330, as amended by Pub. L. 108–357; Reorg. Plan No. 26 of 1950, 15 FR 4935, 64 Stat. 1280, 3 CFR, 1949–1953 Comp., p. 1017.

Par. 2. Section 10.35 is amended by revising paragraph (b)(9) to read as follows:

§ 10.35 Requirements for covered opinions.

* * * * *

(b) * * *

(9) *State or local bond opinion.* Written advice, included in *bond offering materials* (as defined in § 10.39(c)) for the issuance of a State or local bond, is a *State or local bond opinion if*—

(i) The written advice as to Federal tax matters addressed in the *bond offering materials* consists only of advice that concerns the excludability of interest on a State or local bond from gross income under section 103 of the Internal Revenue Code, the application of section 55 of the Internal Revenue Code to a State or local bond, the status of a State or local bond as a qualified tax-exempt obligation under section 265(b)(3) of the Internal Revenue Code, the status of a State or local bond as a qualified zone academy bond under section 1397E of the Internal Revenue Code, or any combination of the above; and

(ii) The practitioner separately provides to the issuer of the bond written advice that satisfies the requirements set forth in § 10.39.

* * * * *

Par. 3. Section 10.36 is revised to read as follows:

§ 10.36 Procedures to ensure compliance.

(a) *Requirements for covered opinions.* Any practitioner who has (or practitioners who have or share) principal authority and responsibility for overseeing a firm's practice of providing advice concerning Federal tax issues must take reasonable steps to ensure that the firm has adequate procedures in effect for all members, associates, and employees for purposes of complying with §§ 10.35 and 10.39, as applicable. Any such practitioner will be subject to discipline for failing to comply with the requirements of this paragraph if—

(1) The practitioner through willfulness, recklessness, or gross incompetence does not take reasonable steps to ensure that the firm has adequate procedures to comply with §§ 10.35 and 10.39, as applicable, and one or more individuals who are members of, associated with, or employed by, the firm are, or have, engaged in a pattern or practice, in connection with their practice with the firm, of failing to comply with §§ 10.35 and 10.39, as applicable; or

(2) The practitioner knows or should know that one or more individuals who are members of, associated with, or employed by, the firm are, or have, engaged in a pattern or practice, in connection with their practice with the firm, that does not comply with §§ 10.35 and 10.39, as applicable, and the practitioner, through willfulness, recklessness, or gross incompetence fails to take prompt action to correct the noncompliance.

(b) *Effective date.* This section is applicable on the date that is 120 days after publication of the final regulations in the **Federal Register**.

Par. 4. Section 10.38 is revised to read as follows:

§ 10.38 Establishment of advisory committees.

(a) *Advisory committees.* To promote and maintain the public's confidence in tax advisors, the Director of the Office of Professional Responsibility is authorized to establish one or more advisory committees composed of at least five individuals authorized to practice before the Internal Revenue Service. The Director should ensure that membership of an advisory committee is balanced among those who practice as attorneys, accountants, and enrolled agents. Under procedures prescribed by the Director, an advisory committee may review and make general recommendations regarding professional standards or best practices for tax advisors, including whether hypothetical conduct would give rise to a violation of §§ 10.35, 10.36 or 10.39.

(b) *Effective date.* This section is applicable 120 days after publication of the final regulations in the **Federal Register**.

Par. 5. Section 10.39 is added to read as follows:

§ 10.39 Requirements for State or local bond opinions.

(a) *In general.* A practitioner who provides a *State or local bond opinion* shall comply with the standards of practice in this section.

(b) *Requirements for separately provided written advice.* A practitioner providing a *State or local bond opinion* must separately provide to the issuer of the bond written advice that satisfies each of the following requirements. For purposes of this section, the written advice may be set forth in a tax certificate or in other documents included in the transcript of proceedings, or, if no transcript is prepared, in one or more other documents made available to the issuer, provided that the documents constituting the written advice taken together satisfy each of the following requirements.

(1) *Factual matters.* (i) The practitioner must use reasonable efforts to identify and ascertain the facts,

which may relate to future events, and to determine which facts are relevant. The written advice must identify and consider all facts that the practitioner determines to be relevant.

(ii) The practitioner must not base the written advice on any unreasonable factual assumptions (including assumptions as to future events). An unreasonable factual assumption includes a factual assumption that the practitioner knows or should know is incorrect or incomplete. A factual assumption includes reliance on a projection, financial forecast or appraisal. It is unreasonable for a practitioner to rely on a projection, financial forecast or appraisal if the practitioner knows or should know that the projection, financial forecast or appraisal is incorrect or incomplete or was prepared by a person lacking the skills or qualifications necessary to prepare such projection, financial forecast or appraisal. The written advice must identify in a separate section all factual assumptions relied upon by the practitioner.

(iii) The practitioner must not base the written advice on any unreasonable factual representations, statements or findings of any person. An unreasonable factual representation includes a factual representation that the practitioner knows or should know is incorrect or incomplete. The written advice must identify in a separate section all factual representations, statements or findings relied upon by the practitioner.

(iv) If the facts required to be identified and considered under this paragraph (b)(1) are set forth in a tax certificate or other similar document that is included in the transcript of proceedings and the analysis required by paragraphs (b)(2) and (b)(3) of this section is set forth in a separate document, the practitioner may incorporate the facts required to be identified or considered in the separate document by reference to the tax certificate or other document.

(2) *Relate law to facts.* (i) The written advice must relate the applicable law (including potentially applicable judicial doctrines) to the relevant facts.

(ii) The practitioner must not assume the favorable resolution of any significant Federal tax issue except as provided in paragraph (d) of this section, or otherwise base an opinion on any unreasonable legal assumptions, representations, or conclusions.

(iii) The written advice must not contain internally inconsistent legal analysis or conclusions.

(3) *Evaluation of significant Federal tax issues*—(i) *In general.* The written advice must consider all significant Federal tax issues that are relevant to the overall conclusion provided in the State or local bond opinion with respect to the application of section 103 of the Internal Revenue Code, section 55 of the Internal Revenue Code, section 265(b)(3) of the Internal Revenue Code, or section 1397E of the Internal Revenue Code, or any combination thereof, except as provided in paragraph (d) of this section.

(ii) *Conclusion as to each significant Federal tax issue.* The written advice must provide the practitioner's conclusion as to the likelihood that a taxpayer will prevail on the merits with respect to each significant Federal tax issue considered in the written advice. The written advice must describe the reasons for the conclusions, including the facts and analysis supporting the conclusions.

(iii) *Evaluation based on chances of success on the merits.* In evaluating the significant Federal tax issue(s) addressed in the written advice, the practitioner must not take into account the possibility that a tax return will not be audited, that an issue will not be raised on audit, or that an issue will be resolved through settlement if raised.

(c) *Bond offering materials.* The term *bond offering materials* means any written materials delivered to a purchaser of a State or local bond in connection with the issuance of the bond in a public or private offering, including an official statement (if one is prepared).

(d) *Competence to provide opinion; reliance on opinions of others.* (1) The practitioner must be knowledgeable in all of the aspects of Federal tax law relevant to the opinion being rendered, except that the practitioner may rely on the opinion of another practitioner with respect to one or more Federal tax issues unless the practitioner knows or should know that the opinion of the other practitioner should not be relied on. If a practitioner relies on the opinion of another practitioner regarding a significant Federal tax issue, the relying practitioner must identify the other opinion and set forth in the written advice the conclusions reached in the other opinion.

(2) The practitioner must be satisfied that the combined analysis of the opinions, taken as a whole satisfy the requirements of this section.

(e) *Effective date.* This section applies to State or local bond opinions that are rendered on a date that is on or after 120 days after publication of the final regulations in the **Federal Register**.

Par. 6. Section 10.52 is revised to read as follows:

§ 10.52 Violation of regulations.

(a) *Prohibited conduct.* A practitioner may be censured, suspended or disbarred from practice before the Internal Revenue Service for any of the following:

(1) Willfully violating any of the regulations (other than § 10.33) contained in this part; or

(2) Recklessly or through gross incompetence (within the meaning of § 10.51(l)) violating §§ 10.34, 10.35, 10.36, 10.37 or 10.39.

(b) *Effective date.* This section is applicable 120 days after publication of the final regulations in the **Federal Register**.

Mark E. Matthews,

Deputy Commissioner for Services and Enforcement, Internal Revenue Service.

Approved: December 8, 2004.

Arnold I. Havens,

General Counsel, Department of the Treasury.

[FR Doc. 04–27679 Filed 12–17–04; 8:45 am]

BILLING CODE 4830–01–P

ENVIRONMENTAL PROTECTION AGENCY

40 CFR Part 300

[FRL–7848–6]

National Oil and Hazardous Substance Pollution Contingency Plan National Priorities List

AGENCY: Environmental Protection Agency.

ACTION: Notice of intent to partially delete 9.84 acres within the Uravan Superfund Site from the National Priorities List.

SUMMARY: The Environmental Protection Agency (EPA) Region 8 is issuing a notice of intent to partially delete 9.84 acres within the Uravan Superfund Site located in Montrose County, Colorado, from the National Priorities List (NPL) and requests public comment on this notice of intent. The NPL, promulgated pursuant to section 105 of the Comprehensive Environmental Response, Compensation, and Liability Act (CERCLA) of 1980, as amended, is found at Appendix B of 40 CFR part 300 which is the National Oil and Hazardous Substances Pollution Contingency Plan (NCP). The EPA and the State of Colorado, through the Colorado Department of Public Health and Environment, have determined that all appropriate response actions under CERCLA, other than operation and maintenance and five-year reviews, have been completed for the 9.84 acres including two historic structures.

However, this deletion does not preclude future actions under Superfund.

In the ''Rules and Regulations'' section of today's **Federal Register**, we are publishing a direct final notice of partial deletion of the Uravan Superfund Site without prior notice of intent to delete because we view this as a noncontroversial revision and anticipate no adverse comment. We have explained our reasons for this partial deletion in the preamble to the direct final deletion. If we receive no adverse comment(s) on this notice of intent to partially delete or the direct final notice of partial deletion, we will not take further action on this notice of intent to delete. If we receive adverse comment(s), we will withdraw the direct final notice of partial deletion and it will not take effect. We will, as appropriate, address all public comments in a subsequent final deletion notice based on this notice of intent to partially delete. We will not institute a second comment period on this notice of intent to partially delete. Any parties interested in commenting must do so at this time. For additional information, see the direct final notice of deletion which is located in the rules section of this **Federal Register**.

DATES: Comments concerning this Site must be received by January 19, 2005.

ADDRESSES: Written comments should be addressed to: Rob Henneke, Community Involvement Coordinator, U.S. EPA (8OC–PI), 999 18th Street, Suite 300, Denver, Colorado, USA 80202, (*henneke.rob@epa.gov*), (303) 312–6734, or toll free 1–800–227–8917, extension 6734.

FOR FURTHER INFORMATION CONTACT: Rebecca Thomas, Remedial Project Manager, U.S. EPA (8ERP–SR), 999 18th Street, Suite 300, Denver, Colorado, USA 80202 (*thomas.rebecca@epa.gov*), (303) 312–6552, or toll free 1–800–227–8917, extension 6552.

SUPPLEMENTARY INFORMATION: For additional information, *see* the Direct Final Notice of Deletion which is located in the rules section of this **Federal Register**.

Information Repository: A repository has been established to provide detailed information concerning this decision at the following address: U.S. EPA Region 8 Records Center, 999 18th Street, Suite 300, Denver, Colorado, USA 80202, (303) 312–6473. Hours: M–F, 8:30 a.m. to 4:30 p.m.

List of Subjects in 40 CFR Part 300

Environmental Protection, Air pollution control, Chemicals, Hazardous waste, Hazardous substances, Intergovernmental relations, Penalties, Reporting and recordkeeping requirements, Superfund, Water pollution control, Water supply.

Authority: 33 U.S.C. 1321(c)(2); 42 U.S.C. 9601–9657; E.O. 12777, 56 FR 54757, 3 CFR, 1991 Comp., p. 351; E.O. 12580, 52 FR 2923; 3 CFR, 1987 Comp., p. 193.

Dated: December 6, 2004.

Max Dodson,

Acting Regional Administrator, Region 8.

[FR Doc. 04–27550 Filed 12–17–04; 8:45 am]

BILLING CODE 6560–50–P

DEPARTMENT OF THE INTERIOR

Fish and Wildlife Service

50 CFR Part 21

RIN 1018–AT63

Migratory Bird Permits; Determination That the State of Connecticut Meets Federal Falconry Standards

AGENCY: Fish and Wildlife Service, Interior.

ACTION: Proposed rule.

SUMMARY: We propose to add the State of Connecticut to the list of States whose falconry laws meet or exceed Federal falconry standards. We have reviewed the Connecticut falconry regulations and have determined that they are in compliance with the regulations governing falconry. This action will enable citizens to apply for Federal and State falconry permits and to practice falconry in Connecticut.

DATES: We must receive comments on this proposed rule no later than January 19, 2005.

ADDRESSES: You may submit comments, identified by RIN 1018–AT63, by any of the following methods:

- Federal eRulemaking Portal: *http://www.regulations.gov.* Follow the instructions for submitting comments.
- Agency Web Site: *http://migratorybirds.fws.gov.* Follow the links to submit a comment.
- E-mail: *connfalconryregs@fws.gov.*
- Fax: 703–358–2217.
- Mail: Chief, Division of Migratory Bird Management, U.S. Fish and Wildlife Service, 4401 North Fairfax Drive, Mail Stop MBSP–4107, Arlington, Virginia 22203–1610. You may inspect comments during normal business hours at the same address.
- Hand Delivery/Courier: Division of Migratory Bird Management, U.S. Fish and Wildlife Service, 4501 North Fairfax Drive, Room 4091, Arlington, Virginia 22203–1610.

Instructions: All submissions received must include Regulatory Information Number (RIN) 1018–AT63 at the beginning. All comments received, including any personal information provided, will be available for public inspection at the above (''Hand Delivery/Courier'') address. For detailed instructions on submitting comments and additional information on the rulemaking process, see the ''Public Participation'' heading in the **SUPPLEMENTARY INFORMATION** section of this document.

FOR FURTHER INFORMATION CONTACT: Brian Millsap, Chief, Division of Migratory Bird Management, U.S. Fish and Wildlife Service, 703–358–1714; Dr. George Allen, Wildlife Biologist, 703–358–1825; or Diane Pence, Regional Migratory Bird Coordinator, Hadley, Massachusetts, 413–253–8577.

SUPPLEMENTARY INFORMATION:

Background

The Fish and Wildlife Service is the Federal agency with the primary responsibility for managing migratory birds. Our authority is based on the Migratory Bird Treaty Act (MBTA) (16 U.S.C. 703 *et seq.*), which implements conventions with Great Britain (for Canada), Mexico, Japan, and the Soviet Union (Russia). Raptors (birds of prey) are afforded Federal protection by the 1972 amendment to the Convention for the Protection of Migratory Birds and Game Animals, February 7, 1936, United States—Mexico, as amended; the Convention between the United States and Japan for the Protection of Migratory Birds in Danger of Extinction and Their Environment, September 19, 1974; and the Convention Between the United States of America and the Union of Soviet Socialist Republics (Russia) Concerning the Conservation of Migratory Birds and Their Environment, November 26, 1976.

The taking and possession of raptors for falconry are strictly prohibited except as permitted under regulations implementing the MBTA. Raptors also may be protected by State regulations. Regulations governing the issuance of permits for migratory birds are authorized by the MBTA and subsequent regulations. They are in title 50, Code of Federal Regulations, parts 10, 13, 21, and (for eagle falconry) 22.

Regulations in 50 CFR part 21 provide for review and approval of State falconry laws by the Fish and Wildlife Service. A list of States whose falconry laws are approved by the Service is found in 50 CFR 21.29(k). The practice of falconry is authorized in those States. As provided in 50 CFR 21.29(a) and (c), the Director has reviewed certified copies of the falconry regulations

adopted by the State of Connecticut and has determined that they meet or exceed Federal falconry standards. Federal falconry standards contained in 50 CFR 21.29(d) through (i) include permit requirements, classes of permits, examination procedures, facilities and equipment standards, raptor marking restrictions, and raptor taking restrictions. Connecticut regulations also meet or exceed all restrictions or conditions found in 50 CFR 21.29(j), which include requirements on the number, species, acquisition, and marking of raptors. Therefore, we are proposing that the State of Connecticut be listed under § 21.29(k) as a State that meets Federal falconry standards. Inclusion of Connecticut in this list would eliminate the current restriction that prohibits falconry in that State.

Why Is This Rulemaking Needed?

The need for the proposed changes to 50 CFR 21.29(k) arose from the desire of the State of Connecticut to institute a falconry program for the benefit of citizens interested in the sport of falconry. Accordingly, the State promulgated regulations that we have concluded meet the Federal requirements protecting migratory birds. The proposed changes to 50 CFR 21.29(k) are necessary to allow persons in the State of Connecticut to practice falconry under the regulations the State submitted for approval.

Changes in the Regulations Governing Falconry

We propose to add the State of Connecticut to the list of States with approved falconry regulations that will enable citizens to practice falconry in the State.

Clarity of This Regulation. Executive Order 12866 requires each agency to write regulations that are easy to understand. We invite your comments on how to make this rule easier to understand, including answers to questions such as the following: (1) Are the requirements in the rule clearly stated? (2) Does the rule contain technical language or jargon that interferes with its clarity? (3) Does the format of the rule (grouping and order of sections, use of headings, paragraphing, etc.) aid or reduce its clarity? (4) Would the rule be easier to understand if it were divided into more (but shorter) sections? (A ''section'' appears in bold type and is preceded by the symbol ''§ '' and a numbered heading; for example, ''§ 21.29 Falconry standards and falconry permitting.'') (5) Does the description of the rule in the ''Supplementary Information'' section of the preamble help you to understand the proposed rule? What else could we do to make the rule easier to understand?

Send a copy of any comments that concern how we could make this rule easier to understand to: Office of Regulatory Affairs, Department of the Interior, Room 7229, 1849 C Street NW., Washington, DC 20240. You also may e-mail comments to *Exsec@ios.doi.gov.*

Regulatory Planning and Review. In accordance with the criteria in Executive Order 12866, this rule is not a significant regulatory action.

a. This rule will not have an annual economic effect of $100 million or more or adversely affect an economic sector, productivity, jobs, the environment, or other units of government. A cost-benefit and economic analysis is not required. This rule will affect a limited number of potential falconers in Connecticut.

b. This rule will not create inconsistencies with other agencies' actions. The rule deals solely with governance of falconry in Connecticut. No other Federal agency has any role in regulating falconry.

c. This rule will not materially affect entitlements, grants, user fees, loan programs, or the rights and obligations of their recipients. There are no entitlements, grants, user fees, or loan programs associated with the regulation of falconry.

d. This rule will not raise novel legal or policy issues. This rule simply adds Connecticut to the list of States with approved falconry regulations.

Regulatory Flexibility Act (5 U.S.C. 601 et seq.)

Under the Regulatory Flexibility Act (5 U.S.C. 601 *et seq.*, as amended by the Small Business Regulatory Enforcement Fairness Act (SBREFA) of 1996), whenever an agency is required to publish a notice of rulemaking for any proposed or final rule, it must prepare and make available for public comment a regulatory flexibility analysis that describes the effect of the rule on small entities (*i.e.*, small businesses, small organizations, and small government jurisdictions). However, no regulatory flexibility analysis is required if the head of an agency certifies the rule will not have a significant economic impact on a substantial number of small entities.

Small Business Regulatory Enforcement Fairness Act. SBREFA amended the Regulatory Flexibility Act to require Federal agencies to provide a statement of the factual basis for certifying that a rule will not have a significant economic impact on a substantial number of small entities. We have examined this rule's potential effects on small entities as required by the Regulatory Flexibility Act, and have determined that this action will not have a significant economic impact on a substantial number of small entities because the change will merely approve the falconry regulations for Connecticut and allow the practice of falconry there. This determination is based on the fact that we are simply adding one State to the list of States with approved falconry regulations. This rule will have no significant economic effect on a substantial number of small entities, and no regulatory flexibility analysis is required.

This rule is not a major rule under SBREFA, 5 U.S.C. 804(2).

a. This rule does not have an annual effect on the economy of $100 million or more. Approval of the Connecticut regulations will have only a very small effect on the economy. We estimate that 20 individuals would obtain falconry permits as a result of this rule, and many of the expenditures of those permittees would accrue to small businesses. The maximum number of birds allowed by a falconer is three, so the maximum number of birds likely to be possessed is 60. Some birds would be taken from the wild, but others could be purchased. Using one of the more expensive birds, the northern goshawk, as an estimate, the cost to procure a single bird is less than $5,000, which, with an upper limit of 60 birds, translates into $300,000. Expenditures for building facilities would be less than $32,000 for 60 birds, and for care and feeding less than $60,000. These expenditures, totaling less than $400,000, represent an upper limit of potential economic impact from the addition of Connecticut to the list of approved States.

b. This rule will not cause a major increase in costs or prices for consumers, individual industries, Federal, State, or local government agencies, or geographic regions. The practice of falconry does not significantly affect costs or prices in any sector of the economy.

c. This rule will not have significant adverse effects on competition, employment, investment, productivity, innovation, or the ability of U.S.-based enterprises to compete with foreign-based enterprises. Falconry is an endeavor of private individuals. Neither regulation nor practice of falconry significantly affects business activities.

Unfunded Mandates Reform Act. In accordance with the Unfunded Mandates Reform Act (2 U.S.C. 1501 *et seq.*).

a. This rule will not ''significantly or uniquely'' affect small governments. A Small Government Agency Plan is not required. Falconry is an endeavor of private individuals. Neither regulation nor practice of falconry affects small government activities in any significant way.

b. This rule will not produce a Federal mandate of $100 million or greater in any year, *i.e.*, it is not a ''significant regulatory action'' under the Unfunded Mandates Reform Act.

Takings. In accordance with Executive Order 12630, the rule does not have significant takings implications. A takings implication assessment is not required. This rule does not contain a provision for taking of private property.

Federalism. This rule does not have sufficient Federalism effects to warrant preparation of a Federalism assessment under Executive Order 13132. It will not interfere with the State's ability to manage itself or its funds.

Civil Justice Reform. In accordance with Executive Order 12988, the Office of the Solicitor has determined that the rule does not unduly burden the judicial system and meets the requirements of sections 3(a) and 3(b)(2) of the Order.

Paperwork Reduction Act. We examined these regulations under the Paperwork Reduction Act of 1995. OMB has approved the information collection requirements of the Migratory Bird Permits Program and assigned clearance number 1018–0022, which expires 7/31/2007. This regulation does not change or add to the approved information collection. Information from the collection is used to document take of wild raptors for use in falconry and to document transfers of birds held for falconry between permittees. A Federal agency may not conduct or sponsor, and a person is not required to respond to, a collection of information unless it displays a currently valid OMB control number.

National Environmental Policy Act. We have analyzed this rule in accordance with the criteria of the National Environmental Policy Act (NEPA) and Part 516 of the Department of the Interior Manual (DM). This rule does not constitute a major Federal action significantly affecting the quality of the human environment, and does not require the preparation of an Environmental Impact Statement or an Environmental Assessment (EA). We prepared an EA in July 1988 to support establishment of simpler, less restrictive regulations governing the use of most raptors in falconry. You can obtain a copy of the EA by contacting us at the address in the **ADDRESSES** section. This rule simply adds Connecticut to the list of States with approved falconry regulations. In the last five years we have added several States to the list of those with approved falconry regulations. Those additions generated few public or agency comments. We view this action as a routine action with precedent. Therefore, the action is categorically excluded under Department of the Interior NEPA procedures as an ''amendment to an approved action when such changes have no or minor potential environmental impact'' (516 DM 6, Appendix 1.4 (A)(1)).

Government-to-Government Relationship with Tribes. In accordance with the President's memorandum of April 29, 1994, ''Government-to-Government Relations with Native American Tribal Governments'' (59 FR 22951), Executive Order 13175, and 512 DM 2, we have evaluated potential effects on Federally recognized Indian tribes and have determined that there are no potential effects. This rule will not interfere with the Tribes' ability to manage themselves or their funds or to regulate falconry on tribal lands.

Energy Supply, Distribution or Use (Executive Order 13211). On May 18, 2001, the President issued Executive Order 13211 on regulations that significantly affect energy supply, distribution, and use. Executive Order 13211 requires agencies to prepare Statements of Energy Effects when undertaking certain actions. Because this rule only affects the practice of falconry in the United States, it is not a significant regulatory action under Executive Order 12866, and will not significantly affect energy supplies, distribution, or use. Therefore, this action is not a significant energy action and no Statement of Energy Effects is required.

Are There Environmental Consequences of the Proposed Action?

The environmental impacts of this action are extremely limited.

Socioeconomic. We do not expect this action to have discernible socioeconomic impacts.

Raptor populations. This rule does not significantly alter the conduct of falconry in the United States. We believe that there only about 10 falconers or individuals interested in being falconers in Connecticut, and take of raptors for falconry in the State will be prohibited by the State falconry regulations. Therefore, this rule will have a negligible effect on raptor populations.

Endangered and Threatened Species. The regulation change will not affect threatened or endangered species in Connecticut for the reasons set forth below.

Is This Rule in Compliance With Endangered Species Act Requirements?

Yes. Section 7 of the Endangered Species Act (ESA) of 1973, as amended (16 U.S.C. 1531 *et seq.*), requires that ''The Secretary [of the Interior] shall review other programs administered by him and utilize such programs in furtherance of the purposes of this Act.'' It further states that the Secretary must ''insure that any action authorized, funded, or carried out * * * is not likely to jeopardize the continued existence of any endangered species or threatened species or result in the destruction or adverse modification of [critical] habitat * * * '' The Division of Threatened and Endangered Species concurred with our finding that the revised regulations will not affect listed species.

Author. The author of this rulemaking is Dr. George T. Allen, U.S. Fish and Wildlife Service, Division of Migratory Bird Management, 4401 North Fairfax Drive, Mail Stop MBSP–4107, Arlington, Virginia 22203–1610.

Public Participation. You may submit written comments on this rule to the location identified in the **ADDRESSES** section, or you may submit electronic comments to any of the electronic comments addresses listed in the **ADDRESSES** section. We must receive your comments before the date listed in the **DATES** section. All comments will become part of the Administrative Record for the review of the approval. When submitting electronic or written comments, refer to the file number RIN 1018–AT63.

When submitting your electronic comment, please include your name and return address in your message, identify it as comments on the falconry regulations change, and submit your message as an ASCII file. Do not use special characters or any encryption. If you do not receive a confirmation from the system that we have received your electronic comments, you can contact us directly at 703–358–1714.

When submitting written comments, please include your name and return address in your letter and identify it as comments on the falconry regulations change. To facilitate our compilation of the Administrative Record for this action, you must submit written comments on 8½ inch by 11 inch paper.

All comments on the proposed rule will be available for public inspection during normal business hours at Room 4091 at the Fish and Wildlife Service, Division of Migratory Bird Management,

4501 North Fairfax Drive, Arlington, Virginia 22203–1610. The complete file for this proposed rule is available, by appointment, during normal business hours at the same address. You may call 703–358–1825 to make an appointment to view the files.

Our practice is to make comments, including names and home addresses of respondents, available for public review during regular business hours. An individual respondent may request that we withhold his or her home address from the rulemaking record, which we will honor to the extent allowable by law. There also may be circumstances in which we would withhold from the rulemaking record a respondent's identity, as allowable by law. If you wish us to withhold your name and/or address, you must state this prominently at the beginning of your comment. We will make all submissions from organizations or businesses, and from individuals identifying themselves as representatives or officials of organizations or businesses, available for public inspection in their entirety. We will not consider anonymous comments.

List of Subjects in 50 CFR Part 21

Exports, Hunting, Imports, Reporting and recordkeeping requirements, Transportation, Wildlife.

For the reasons stated in the preamble, we propose to amend part 21, subpart C, subchapter B, chapter I, title 50 of the Code of Federal Regulations, as set forth below:

PART 21—MIGRATORY BIRD PERMITS

1. The authority citation for part 21 continues to read as follows:

Authority: 16 U.S.C. 703–712; Pub. L. 106–108; 16 U.S.C. 668a.

§ 21.29 [Amended]

2. Amend § 21.29 by adding to paragraph (k) the word ''Connecticut,'' between the words ''*Colorado,'' and ''*Delaware,''.

Dated: December 10, 2004.

Craig Manson,

Assistant Secretary for Fish and Wildlife and Parks.

[FR Doc. 04–27775 Filed 12–17–04; 8:45 am]

BILLING CODE 4310–55–P

Notices

Federal Register

Vol. 69, No. 243

Monday, December 20, 2004

This section of the FEDERAL REGISTER contains documents other than rules or proposed rules that are applicable to the public. Notices of hearings and investigations, committee meetings, agency decisions and rulings, delegations of authority, filing of petitions and applications and agency statements of organization and functions are examples of documents appearing in this section.

DEPARTMENT OF AGRICULTURE

Submission for OMB Review; Comment Request

December 14, 2004.

The Department of Agriculture has submitted the following information collection requirement(s) to OMB for review and clearance under the Paperwork Reduction Act of 1995, Public Law 104–13. Comments regarding (a) whether the collection of information is necessary for the proper performance of the functions of the agency, including whether the information will have practical utility; (b) the accuracy of the agency's estimate of burden including the validity of the methodology and assumptions used; (c) ways to enhance the quality, utility and clarity of the information to be collected; (d) ways to minimize the burden of the collection of information on those who are to respond, including through the use of appropriate automated, electronic, mechanical, or other technological collection techniques or other forms of information technology should be addressed to: Desk Officer for Agriculture, Office of Information and Regulatory Affairs, Office of Management and Budget (OMB), *Pamela_Beverly_OIRA_Submission@OMB.EOP.GOV* or fax (202) 395–5806 and to Departmental Clearance Office, USDA, OCIO, Mail Stop 7602, Washington, DC 20250–7602. Comments regarding these information collections are best assured of having their full effect if received within 30 days of this notification. Copies of the submission(s) may be obtained by calling (202) 720–8681.

An agency may not conduct or sponsor a collection of information unless the collection of information displays a currently valid OMB control number and the agency informs potential persons who are to respond to the collection of information that such persons are not required to respond to the collection of information unless it displays a currently valid OMB control number.

National Agricultural Statistics Service

Title: Agricultural Prices.

OMB Control Number: 0535–0003.

Summary of Collection: Estimates of prices received by farmers and prices paid for production goods and services are needed by the U.S. Department of Agriculture, National Agriculture Statistics Service (NASS) for the following purposes: (a) To compute parity prices in accordance with requirements of the Agricultural Adjustment Act of 1938 as amended (Title III, Subtitle A, Section 301, (b) to estimate value of production, inventory values, and cash receipts from farming, (c) to determine the level for farmer owned reserves, (d) to provide guidelines for Risk Management Agency price selection options, (e) to determine Federal disaster prices to be paid, and (f) to determine the grazing fee on Federal lands. General authority for these data collection activities is granted under U.S. Code Title 7, Section 2204.

Need and Use of the Information: The NASS price program computes annual U.S. weighted average prices received by farmers for wheat, barley, corn, oats, grain sorghum, rice, and cotton based on monthly marketing. Price estimates are used by many Government agencies as a general measure of commodity price changes and for disaster and insurance payments.

Description of Respondents: Farms; Business or other for-profit.

Number of Respondents: 26,636.

Frequency of Responses: Reporting: On occasion; Monthly; Annually; Biennially.

Total Burden Hours: 10,743.

Foreign Agricultural Service

Title: Sugar Imported for Exports as Refined Sugar or as a Sugar-Containing Products, or used in Production of Certain Polyhydric Alcohols.

OMB Control Number: 0551–0015.

Summary of Collection: Regulation 7 CFR Part 1530 authorizes the Foreign Agricultural Service (FAS) to issue import licenses to enter raw cane sugar (exempt from the tariff-rate quota for the raw cane sugar imports and the related requirements) on the condition that an equivalent quantity of refined sugar be: (1) Exported as refined sugar; (2) exported as an ingredient in sugar containing products; or (3) used in production of certain polyhydric alcohols. The purpose of the sugar import-licensing program is to assist U.S. sugar manufacturers, refiners, and processors in making U.S. products price competitive on the world market and to facilitate the use of domestic refining capacity.

Need and Use of the Information: FAS will collect information to: (1) Determine applicants eligibility; (2) monitor sugar imports, transfers, exports, and use in order to confirm that transactions are conducted and completed within the requirements; (3) audit participants' compliance with the Regulation; and (4) prevent entry of world-priced program sugar from entering the higher-priced domestic commercial sugar market. The information collected is needed by the Sugar Licensing Authority to manage, plan, evaluate

Rural Housing Service

Title: 7 CFR 1902–A, Supervised Bank Accounts.

OMB Control Number: 0575–0158.

Summary of Collection: 7 CFR 1902–A, Supervised Bank Accounts, prescribes the policies and procedures for disbursing loan and grant funds, establishing and closing supervised accounts, and placing Multi-Family housing reserve accounts in supervised accounts. Supervised accounts are accounts with a financial institution in the names of a borrower and the United States Government, represented by Rural Housing Service, Rural Business-Cooperative Service, Rural Utilities Service, or Farm Service Agency (Agency). Section 339 of the Consolidated Farm and Rural Development Act, 7 U.S.C. 1989 and Section 510 of the Housing Act of 1949, 42 U.S.C. 1480 are the legislative authority requiring the use of supervised accounts.

Need and Use of the Information: The agency's state and field offices will collect information from borrowers and financial institutions and use the information to monitor compliance with agency regulations governing supervised accounts, such as establishing, maintaining, and withdrawing funds. In addition, the information will be used to ensure that the borrowers operate on a sound basis and use the loan and grant funds for authorized purposes.

Description of Respondents: Business or other for-profit.

Number of Respondents: 20,000.

Frequency of Responses: Reporting: On occasion.

Total Burden Hours: 26,260.

Sondra Blakey,

Departmental Information Collection Clearance Officer.

[FR Doc. 04–27715 Filed 12–17–04; 8:45 am]

BILLING CODE 3410–20–P; 3410–10–P and 3410–XT–P

DEPARTMENT OF AGRICULTURE

Submission for OMB Review; Comment Request

December 14, 2004.

The Department of Agriculture has submitted the following information collection requirement(s) to OMB for review and clearance under the Paperwork Reduction Act of 1995, Public Law 104–13. Comments regarding (a) whether the collection of information is necessary for the proper performance of the functions of the agency, including whether the information will have practical utility; (b) the accuracy of the agency's estimate of burden including the validity of the methodology and assumptions used; (c) ways to enhance the quality, utility and clarity of the information to be collected; (d) ways to minimize the burden of the collection of information on those who are to respond, including through the use of appropriate automated, electronic, mechanical, or other technological collection techniques or other forms of information technology should be addressed to: Desk Officer for Agriculture, Office of Information and Regulatory Affairs, Office of Management and Budget (OMB), *Pamela_Beverly_OIRA_Submission@ OMB.EOP.gov* or fax (202) 395–5806 and to Departmental Clearance Office, USDA, OCIO, Mail Stop 7602, Washington, DC 20250–7602. Comments regarding these information collections are best assured of having their full effect if received within 30 days of this notification. Copies of the submission(s) may be obtained by calling (202) 720–8681.

An agency may not conduct or sponsor a collection of information unless the collection of information displays a currently valid OMB control number and the agency informs potential persons who are to respond to the collection of information that such persons are not required to respond to the collection of information unless it displays a currently valid OMB control number.

Animal and Plant Health Inspection Service

Title: Certificate for Poultry and Hatching Eggs for Export.

OMB Control Number: 0579–0048.

Summary of Collection: The export of agricultural commodities, including poultry and hatching eggs, is a major business in the United States and contributes to a favorable balance of trade. As part of its mission to facilitate the export of U.S. poultry and poultry products, the U.S. Department of Agriculture (USDA), Animal and Plant Health Inspection Service (APHIS), Veterinary Services, maintains information regarding the import health requirements of other countries for poultry and hatching eggs exported from the U.S. Most countries require a certification that our poultry and hatching eggs are disease free. Certificate for Poultry and Hatching Eggs for Export is authorized by 21 U.S.C. 112 and 113 which is used to certify the disease free status of poultry and hatching eggs exported from the United States. The regulation that implements this law is found in part 91 of title 9, Code of Federal Regulations.

Need and Use of the Information: APHIS will use VS form 17–6, Certificate for Poultry & Hatching Eggs for Export, to collect information on the quantity and type of poultry and hatching egg designated for export. The information collected is necessary to satisfy the import requirements of the receiving countries and to prevent unhealthy poultry or disease carrying hatching eggs from being exported from the United States, thereby protecting and encouraging trade with the United States and preventing the international dissemination of poultry diseases.

Description of Respondents: Farms; Federal government; State, local or tribal government; individuals or households; business or other for-profit.

Number of Respondents: 300.

Frequency of Responses: Reporting: On occasion.

Total Burden Hours: 10,500.

Animal Plant and Health Inspection Service

Title: Asian Long Horned Beetle Regulations.

OMB Control Number: 0579–0122.

Summary of Collection: The Animal and Plant Health Inspection Service (APHIS) of the Department of Agriculture is responsible for preventing plant pests and noxious weeds from entering the United States, preventing the spread of pests and weeds not widely distributed in the United States, and eradicating those imported pests and weeds when eradication is feasible. The Plant Protection and Quarantine program of APHIS is responsible for implementing the provisions of the Act and does so through the enforcement of its domestic quarantine regulations in 7 CFR part 301. The Asian Long Horned Beetle (ALB) is a destructive pest of hardwood trees that bore into the heartwood of host trees eventually killing them. APHIS regulations are designed to prevent the spread of the ALB within the United States.

Need and Use of the Information: APHIS will collect information to control and monitor the movement of the Asian Long Horned Beetle using several APHIS forms. If the information were not collected, the effectiveness of the Asian Long Horned Beetle Quarantine would be severely compromised.

Description of Respondents: Farms; business or other for profit; State, local or tribal government; individuals or households.

Number of Respondents: 475.

Frequency of Responses: Reporting: On occasion.

Total Burden Hours: 244.

Animal Plant and Health Inspection Service

Title: Importation of Hass Avocado from Mexico.

OMB Control Number: 0579–0129.

Summary of Collection: The Animal and Plant Health Inspection Service (APHIS) of the Department of Agriculture is responsible for preventing plant diseases or insect pests from entering the United States, preventing the spread of pests not widely distributed in the United States, and eradicating those imported when eradication is feasible. The Plant Protection Act (7 U.S.C. 7701–7772) authorizes APHIS to carry out this mission. APHIS will collect information from a variety of individuals, both within and outside of the United States, who are involved in growing, packing, handling, transporting, and importing foreign logs, trees, shrubs, and other articles. Currently, there are regulations that allow fresh Hass Avocado fruit grown in approved orchards in Michoacan, Mexico to be imported into the United States under certain conditions.

Need and Use of the Information: APHIS will collect information using forms PPQ 519, ''Compliance Agreement'' and PPQ 587, ''Application for Permit to Import Plants or Plant Products.'' The information collected will ensure that fresh Hass Avocados from Mexico do not harbor exotic insect pests.

Description of Respondents: Business or other for profit; State, local or tribal government.

Number of Respondents: 3,058.

Frequency of Responses: Recordkeeping; Reporting: On occasion.

Total Burden Hours: 4,823.

Animal and Plant Health Inspection Service

Title: Collaboration in Animal Health, Food Safety, and Epidemiology (CAHFSE) Swine Study.

OMB Control Number: 0579–NEW.

Summary of Collection: The Collaboration in Animal and Health and Food Safety Epidemiology (CAHFSE) Swine Study, is a joint effort among three agencies within the Department of Agriculture: Animal and Plant Health Inspection Service (APHIS); the Agricultural Research Service (ARS); and the Food Safety and Inspection Service (FSIS). The mission of this surveillance effort is twofold: to enhance overall understanding of bacteria that pose a food-safety risk by tracking these bacteria on-farm and through the harvesting process, over time; and to provide a means to routinely monitor critical diseases in food-animal production. To accomplish this mission, APHIS collects on-farm samples, FSIS collects slaughter plant data from plant managers, and ARS conducts laboratory examination of the samples collected on-farm or in-plant. 7 U.S.C. 391, the Animal Industry Act of 1884 and 21 U.S.C. 119, mandates collection and dissemination of animal and poultry health data and information.

Need and Use of the Information: APHIS will collect information using several forms. The collected information from the study will be disseminated to veterinary consultants/practitioners, industry and producers groups, and academia to monitor antimicrobial resistance and to identify problem areas in health management and feeding practices, which contribute to disease transmission. Without CAHFSE, the U.S.'s ability to detect trends in management, production, and the impact they have on animal health and food safety either directly or indirectly would be reduced or nonexistent.

Description of Respondents: Farms; Individuals or households; Federal government.

Number of Respondents: 530.

Frequency of Responses: Recordkeeping; reporting: on occasion; quarterly; monthly.

Total Burden Hours: 1,502.

Sondra Blakey,

Departmental Information Collection Clearance Officer.

[FR Doc. 04–27716 Filed 12–17–04; 8:45 am]

BILLING CODE 3410–34–P

DEPARTMENT OF AGRICULTURE

Black Hills National Forest Advisory Board

AGENCY: USDA Forest Service, Rocky Mountain Region.

ACTION: Black Hills National Forest Advisory Board re-charter.

SUMMARY: The USDA Forest Service is re-chartering the Black Hills National Forest Advisory Board to obtain advice and recommendations on a broad range of forest issues such as forest plan revisions or amendments, travel management, forest monitoring and evaluation, and site-specific projects having forest-wide implications.

FOR FURTHER INFORMATION CONTACT: Frances Reynolds, Legislative Affairs, Rocky Mountain Region, Forest Service, (303) 275–5357.

SUPPLEMENTARY INFORMATION: Pursuant to the Federal Advisory Committee Act (5 U.S.C. App.), notice is hereby given that the U.S. Department of Agriculture Forest Service Black Hills National Forest, is re-chartering the Black Hills National Forest Advisory Board. The Board provides advice and recommendations on a broad range of forest planning issues. The Board membership consists of individuals representing commodity interests, amenity interests, and state and local government.

The Black Hills National Forest Advisory Board has been determined to be in the public interest in connection with the duties and responsibilities of the Black Hills National Forest. National forest management requires improved coordination among the interests and governmental entities responsible for land management decisions and the public that the agency serves. The Board consists of 15 members that represent the following interests (this membership closely follows the membership outlined by the Secure Rural Schools and Community Self Determination Act for Resource Advisory Committees (16 U.S.C. 500, *et seq.*)):

1. Economic development.
2. Developed outdoor recreation, off-highway vehicle users, or commercial recreation.
3. Energy and mineral development.
4. Commercial timber industry.
5. Permittee (grazing or other land use within the Black Hills area).
6. Nationally recognized environmental organizations.
7. Regionally or locally recognized environmental organizations.
8. Dispersed recreation.
9. Archeology or history.
10. Nationally or regionally recognized sportsmen's groups, such as anglers or hunters.
11. South Dakota elected office.
12. Wyoming elected office.
13. South Dakota or Wyoming county—or local-elected official.
14. Tribal government elected or appointed official.
15. South Dakota or Wyoming state natural resource agency official.

The Board members determine chair responsibility. The Forest Supervisor of the Black Hills National Forest serves as the designated Federal official under sections 10(e) and (f) of the Federal Advisory Committee Act (5 U.S.C. App.).

The Black Hills National Forest provides notices as needed of additional actions that will be taken to complete the Board's function.

Equal opportunity practices are followed in all appointments to advisory committees. To ensure that the recommendations of the Board have been taken into account the needs of diverse groups the Black Hills National Forest serves, membership will include to the extent practicable individuals with demonstrated ability to represent monitories, women, and persons with disabilities.

Dated: December 13, 2004.

Brad Exton,

Acting Forest Supervisor.

[FR Doc. 04–27709 Filed 12–17–04; 8:45 am]

BILLING CODE 3410–11–M

DEPARTMENT OF AGRICULTURE

Forest Service

Sierra National Forest, California, Kings River Project

AGENCY: Forest Service, USDA.

ACTION: Revised notice of intent to prepare an environmental impact statement. This notice of intent was previously filed on September 22, 2004; pages 56743 & 56744 and is revised to reflect a further defined proposed action.

SUMMARY: Forest Service will prepare an environmental impact statements on a proposal to conduct a sustainable forest ecosystem study that examines the response of an array of ecosystem

elements to uneven-aged, small group selection and prescribed fire. The intention is to implement these activities in suitable locations over time and to monitor and perform research studies on the response of physical, chemical, and biological features of the Big Creek and Dinkey Creek watersheds. The study is a collaborative effort between the Sierra National Forest and the Pacific Southwest Research Station.

DATES: Comments concerning the scope of the analysis must be received by January 24, 2005. Mail comments to: Ray Porter District Ranger, High Sierra Ranger District, PO Box 559 (29688 Auberry Road), Prather, CA 93651.

The draft environmental impact statement is expected June 2005 and the final environmental impact statement is expected October 2005.

FOR FURTHER INFORMATION CONTACT: Ross Peckinpah, Acting Kings River Project Coordinator, (559) 855–5355 x3350.

SUPPLEMENTARY INFORMATION:

Purpose and Need for Action

The Kings River Project is a key part of the adaptive management program for the Sierra Nevada designed to address questions that relate to the uncertainties associated with management activities and their effects on wildlife habitat, watershed condition and modified wildfire behavior.

Proposed Action

The Sierra National Forest proposes to implement the Kings River Project that initially involves analyzing in detail eight management units for treatment between 2006 and 2008. Analysis will include an additional 71 management units for examination based on existing conditions and the potential for cumulative effects (of which 10 are no treatment-controls units and the remaining 61 units for implementation between 2011 and 2033). Thus, the EIS will be programmatic for the entire project with a focused piece for the initial eight management units. The EIS will address the five planned research studies (Kings River experimental watershed, California spotted owl, fisher, air quality, and uneven-aged management) while incorporating the National Fire Plan objectives (April 2000), USDA Forest Service Strategic Plan and the Sierra Nevada Framework for Conservation and Collaboration Record of Decision (January 2001), as amended on January 21, 2004.

Lead and Cooperating Agencies

The Kings River Project is a collaborative effort between the Sierra National Forest and the Pacific Southwest Research Station (PSW). The Sierra National Forest is the lead agency.

Responsible Official

Ed Cole, Forest Supervisor, Sierra National Forest, 1600 Tollhouse Ave., Clovis, CA 93612.

Nature of Decision To Be Made

The decision to be made is whether to implement the planned treatment and associated studies, an alternative or select no action.

Scoping Process

The Sierra National Forest will conduct a public scoping period that coincides with this notice.

Comment Requested

This revised notice of intent initiates the scoping process which guides the development of the environmental impact statement. The Sierra National Forest is seeking comments regarding this proposal to identify issues that may be presently unknown to the agency.

Early Notice of Importance of Public Participation in Subsequent Environmental Review: A draft environmental impact statement will be prepared for comment. The comment period on the draft environmental impact statement will be 60-days from the date the Environmental Protection Agency publishes the notice of availability in the **Federal Register**.

The Forest Service believes, at this early stage, it is important to give reviewers notice of several court rulings related to public participation in the environmental review process. First, reviewers of draft environmental impact statements must structure their participation in the environmental review of the proposal so that it is meaningful and alerts an agency to the reviewer's position and contentions. *Vermont Yankee Nuclear Power Corp.* v. *MRDC,* 435 U.S. 519, 553 (1978). Also, environmental objections that could be raised at the draft environmental impact statement stage but that are not raised until after completion of the final environmental impact statement may be waived or dismissed by the courts. *City of Angoon* v. *Hodel,* 803 F.2d 1016, 1022 (9th Cir. 1986) and *Wisconsin Heritages, Inc.* v. *Harris,* 490 F. Supp. 1334, 1338 (E.D. Wis. 1980). Because of these court rulings, it is very important that those interested in this proposed action participate by the close of the 60-day comment period so that substantive comments and objections are made available to the Forest Service at a time when it can meaningfully consider them and respond to them in the final environmental impact statement.

To assist the Forest Service in identifying and considering issues and concerns on the proposed action, comments on the draft environmental impact statement should be as specific as possible. It is also helpful if comments refer to specific pages or chapters of the draft statement. Comments may also address the adequacy of the draft environmental impact statement or the merits of the alternatives formulated and discussed in the statement. Reviewers may wish to refer to the Council on Environmental Quality Regulations for implementing the procedural provisions of the National Environmental Policy Act at 40 CFR 1503.3 in addressing these points.

Comments received, including the names and addresses of those who comment, will be considered part of the public record on this proposal and will be available for public inspection.

(Authority: 40 CFR 1501.7 and 1508.2; Forest Service Handbook 1909.15, Section 21)

Dated: December 14, 2004.

Jane Fertig,

Acting Forest Supervisor.

[FR Doc. 04–27809 Filed 12–17–04; 8:45 am]

BILLING CODE 3410–11–M

DEPARTMENT OF AGRICULTURE

Forest Service

Mendocino Resource Advisory Committee

AGENCY: Forest Service, USDA.

ACTION: Notice of meeting.

SUMMARY: The Mendocino County Resource Advisory Committee will meet January 21, 2005, (RAC) in Willits, California. Agenda items to be covered include: (1) Approval of minutes (2) Public Comment, (3) Sub-committees (4) Old Business. (5) Non Attendance/ Informational/action item (6) Discussion/approval of projects, (7) Matters before the group (8) hand outs (9) next agenda items and meeting date.

DATES: The meeting will be held on January 21, 2005, from 9 a.m. to 12 noon.

ADDRESSES: The meeting will be held at the Mendocino County Museum, located at 400 E. Commercial St., Willits, California.

FOR FURTHER INFORMATION CONTACT: Roberta Hurt, Committee Coordinator, USDA, Mendocino National Forest, Covelo Ranger District, 78150 Covelo Road, Covelo CA 95428. (707) 983–8503: e-mail *rhurt@fs.fed.us.*

SUPPLEMENTARY INFORMATION: The meeting is open to the public. Persons who wish to bring matters to the attention of the Committee may file written statements with the Committee staff by January 17, 2005. Public comment will have the opportunity to address the committee at the meeting.

Dated: December 14, 2004.

Blaine Baker,

Designated Federal Official.

[FR Doc. 04–27744 Filed 12–17–04; 8:45 am]

BILLING CODE 3410–11–M

DEPARTMENT OF AGRICULTURE

Forest Service

Notice of Mineral County Resource Advisory Committee Meeting

AGENCY: Forest Service, USDA.

ACTION: Notice of meetings.

SUMMARY: Pursuant to the authorities in the Federal Advisory Committee Act (Pub. L. 92–463) and under the Secure Rural Schools and Community Self-Determination Act of 2000 (Pub. L. 106–393) the Lolo National Forest's Mineral County Resource Advisory Committee will meet on the first Tuesday of each of the next five months from January 2005 through May 2005. Meetings begin at 6 p.m. in Superior, Montana and are open to the public. Meetings normally last two hours.

DATES: January 4, February 1, March 1, April 5, and May 3, 2005.

ADDRESSES: The meetings will be held at the Mineral County Courthouse, 300 River Street, Superior, MT 59872.

FOR FURTHER INFORMATION CONTACT: Robert Harper, Designated Forest Official (DFO), District Ranger, Lolo National Forest, at (406) 822–4233.

SUPPLEMENTARY INFORMATION: Agenda topics for all five meetings will focus on presentation and discussion of new project proposals, as authorized under Title II of P.L. 106–393. Selection of projects will occur at the April and May meetings. Meetings will be announced in local newspapers, the Mineral Independent and the Missoulian.

Dated: December 14, 2004.

Deborah L. R. Austin,

Designated Federal Official.

[FR Doc. 04–27813 Filed 12–17–04; 8:45 am]

BILLING CODE 3410–11–M

DEPARTMENT OF AGRICULTURE

Forest Service

Notice of Southwest Idaho Resource Advisory Committee Meeting

AGENCY: Forest Service, USDA.

ACTION: Notice of meeting.

SUMMARY: Pursuant to the authorities in the Federal Advisory Committee Act (Pub. L. 92–463) and under the Secure Rural Schools and Community Self-Determination Act of 2000 (Pub. L. 106–393), the Boise and Payette National Forests' Southwest Idaho Resource Advisory Committee will conduct a business meeting, which is open to the public.

DATES: Wednesday, January 19, 2004, beginning at 10:30 a.m.

ADDRESSES: Idaho Counties Risk Management Program Building, 3100 South Vista Avenue, Boise, Idaho.

SUPPLEMENTARY INFORMATION: Agenda topics will include review and approval of project proposals, and is an open public forum.

FOR FURTHER INFORMATION CONTACT: Dough Gochnour, Designated Federal Officer, at 208–392–6681 or e-mail *dgochnour@fs.fed.us.*

Dated: December 14, 2004.

Lana S. Thurston,

Administrative Officer, Boise National Forest.

[FR Doc. 04–27815 Filed 12–17–04; 8:45 am]

BILLING CODE 3410–11–M

DEPARTMENT OF AGRICULTURE

Natural Resource Conservation Service

Beaver Creek Watershed Project; Morgan and Washington Counties, Colorado

AGENCY: Natural Resource Conservation Service, Agriculture.

ACTION: Notice of a Finding of No Significant Impact.

SUMMARY: Pursuant to Section 102(2)© of the National Environmental Policy Act of 1969; the Council on Environmental Quality Regulations (40 CFR Part 1500); and the Natural Resource Conservation Service Regulations (7 CFR Part 650); the Natural Resource Conservation Service, U.S. Department of Agriculture, gives notice that an environmental impact statement is not being prepared for the Beaver Creek Watershed Project, Morgan and Washington counties, Colorado.

FOR FURTHER INFORMATION CONTACT: Allen Green, Colorado State Conservationist, Natural Resource Conservation Service, 655 Parfet St., Lakewood, Colorado, 80215–5517, telephone (720) 544–2802.

SUPPLEMENTARY INFORMATION: The environmental assessment of this federally assisted action documents that the project will not cause significant local, regional, or national impacts on the human environment. The findings of Allen Green, State Conservationist, indicate that the preparation and review of an environmental impact statement is not needed for this project.

The primary project purposes are, (1) Agricultural water management—improve water application effectiveness and reduce negative water quality and quantity impacts to surface and groundwater's including, the South Platte River. These impacts being from excessive loading of nitrates, nutrients, sediment, and salts. (2) Watershed protection—protect the soil resource base from excessive irrigation induced erosion and sedimentation, improve soil health through carbon sequestration. (3) Nonagricultural Water Management—creation and improvement of wetland and wildlife habitat as part of a three state initiative.

The planned works of improvement include, on-farm underground irrigation pipelines, on-farm concrete irrigation ditches; sprinkler irrigation systems, and structures for water control. These enduring practices are accompanied by facilitating management practices such as Irrigation Water Management.

This Notice of a Finding of No Significant Impact (FONSI) has been forwarded to the Environmental Protection Agency and to various Federal, State and Local agencies and interested parties. Copies of the FONSI and Plan/Environmental Assessment are available by request from Allen Green, Colorado State Conservationist. Basic data developed during the environmental evaluation are on file and may be reviewed by contacting Allen Green, State Conservationist.

No administrative action on implementation of this project will be taken until 30 days after the date this Notice is published in the **Federal Register**.

Allen Green,

State Conservationist.

(This activity is listed in the Catalog of Federal Domestic Assistance under NO. 10904, Soil and Water Conservation.)

[FR Doc. 04–27777 Filed 12–17–04; 8:45 am]

BILLING CODE 3410–16–P

DEPARTMENT OF AGRICULTURE

Rural Utilities Service

Information Collection Activity; Comment Request

AGENCY: Rural Utilities Service, USDA.

ACTION: Notice and request for comments.

SUMMARY: In accordance with the Paperwork Reduction Act of 1995 (44 U.S.C. Chapter 35, as amended), the Rural Utilities Service's (RUS) invites comments on this information collection for which RUS intends to request approval from the Office of Management and Budget (OMB).

DATES: Comments on this notice must be received by February 18, 2005.

FOR FURTHER INFORMATION CONTACT: Richard Annan, Acting Director, Program Development & Regulatory Analysis, Rural Utilities Service, USDA, 1400 Independence Ave., SW., STOP 1522, Room 5168 South Building, Washington, DC 20250–1522. Telephone: (202) 720–0784. FAX: (202) 720–4120.

SUPPLEMENTARY INFORMATION: The Office of Management and Budget's (OMB) regulation (5 CFR 1320) implanting provisions of the Paperwork Reduction Act of 1995 (Pub. L. 104–13) requires that interested members of the public and affected agencies have an opportunity to comment on information collection and recordkeeping activities (see 5 CFR 1320.8(d)). This notice identifies an information collection that RUS is submitting to OMB for extension.

Comments are invited on (a) whether the collection of information is necessary for the proper performance of the functions of the agency, including whether the information will have practical utility; (b) the accuracy of the agency's estimate of burden including the validity of the methodology and assumption used; (c) ways to enhance the quality, utility and clarity of the information to be collected; and (d) ways to minimize the burden of the collection of information on those who are to respond, including through the use of appropriate automated, electronic, mechanical, or other technological collection techniques on other forms of information technology. Comments may be sent to: Dawn Wolfgang, Program Development and Regulatory Analysis, Rural Utilities Service, U.S. Department of Agriculture, 1400 Independence Ave., SW., Room 5166-South, STOP 1522, Washington, DC 20250–1522. FAX: (202) 720–4120. E-mail: *dawn.wolfgang@usda.gov.*

Title: Electric Loan Application and Related Reporting Burdens.

OMB Control Number: 0572–0032.

Type of Request: Extension of a previously approved information collection, with change.

Abstract: The Rural Electrification Act of 1936 (7 U.S.C. 901 *et seq.*), as amended (RE Act) authorizes and empowers the Administrator of RUS to make and guarantee loans to furnish and improve electric service in rural areas. These loans are amortized over a period of up to 35 years and secured by the borrower's electric assets. In the interest of protecting loan security, monitoring compliance with debt convenants, and ensuring that RUS loan funds are used for purposes authorized by law, RUS requires that borrowers prepare and submit for RUS evaluation, certain studies and reports. Some of these studies and reports are required only once for each loan application; others must be submitted periodically until the loan is completely repaid.

Estimate of Burden: Public reporting burden for this collection of information is estimated to average 14 hours per response.

Respondents: Businesses or other for profits; not-for-profit institutions.

Estimated Number of Respondents: 680.

Estimated Number of Responses per Respondent: 6.

Estimated Total Annual Burden on Respondents: 65,673.

Copies of this information collection, and related form and instructions, can be obtained from Dawn Wolfgang, Program Development and Regulatory Analysis, at (202) 720–0812.

All responses to this notice will be summarized and included in the request for OMB approval. All comments will also become a matter of public record.

Dated: December 14, 2004.

Hilda Gay Legg,

Administrator, Rural Utilities Service.

[FR Doc. 04–27759 Filed 12–17–04; 8:45 am]

BILLING CODE 3410–15–P

DEPARTMENT OF AGRICULTURE

Rural Utilities Service

North Carolina Electric Membership Corporation; Notice of Availability of an Environmental Assessment

AGENCY: Rural Utilities Service, USDA.

ACTION: Notice of availability of an environmental assessment.

SUMMARY: Notice is hereby given that the Rural Utilities Service (RUS), an agency delivering the U.S. Department of Agriculture's Rural Development Utilities Programs, is issuing an environmental assessment with respect to the environmental impacts related to the construction of a 336 megawatt (MW) simple-cycle electric generation facility in Anson County, North Carolina, and a 280 MW simple-cycle electric generation facility and a 7.8-mile 230 kV transmission line in Richmond County, North Carolina. RUS may provide financing assistance to North Carolina Electric Membership Corporation for the project.

FOR FURTHER INFORMATION CONTACT: Lawrence Wolfe, Rural Utilities Service, Engineering and Environmental Staff, Stop 1571, 1400 Independence Avenue, SW., Washington, DC 20250–1571, telephone: (202) 720–9053. Mr. Wolfe's e-mail address is *larry.wolfe@usda.gov.* Information is also available from June Small of North Carolina Electric Membership Corporation. Ms. Small may be contacted by telephone at (919) 872–0800. Ms. Small's e-mail address is *june.small@ncemcs.com.*

SUPPLEMENTARY INFORMATION: North Carolina Electric Membership Corporation's proposed electric generation project will involve the construction and operation of a 336 MW simple-cycle electric generation facility at a site located approximately 4 miles east of Lilesville, just to the north of State Route 1745 (Blewett Falls Road) and south of McCoy Creek in Anson County, North Carolina. The site is 178 acres. Approximately 20 acres of the site will be needed for the generation facility. The facility will be made up of 6 Pratt and Whitney FT–8 combustion turbine units. (Each unit is comprised of 2 turbines.) This facility will require 12 exhaust stacks approximately 60 feet tall. This project will also involve the construction of a 280 MW electric generation facility at a site approximately 2.54 miles southwest of Hamlet west of Airport Road and south of Marks Creek in Richmond County, North Carolina. The site is 258 acres of which approximately 15 to 20 acres will be needed for the generation facility. The facility will be made up of 5 Pratt and Whitney FT–8 combustion turbine units. This facility will require 10 exhaust stacks approximately 60 feet tall. This facility will require the construction of 7.8 miles of 230 kV transmission line between the Rockingham Substation and the Richmond Substation. The transmission line will be constructed and operated by Progress Energy. North Carolina Electric Membership Corporation will incur the cost of the project and finance its cost through an RUS guarantee. Specific

information on the facilities to be constructed and their locations are provided in the environmental assessment.

North Carolina Electric Membership Corporation submitted an environmental analysis to RUS which describes the project and assesses its potential environmental impacts. RUS has conducted an independent evaluation of the environmental analysis and believes that it accurately assesses the potential impacts of the proposed project. This environmental analysis will serve as RUS' environmental assessment of the project.

The environmental assessment can be reviewed at North Carolina Electric Membership Corporation's headquarters located at 3400 Sumner Boulevard, Raleigh, North Carolina, and at the headquarters of RUS at the address provided above. The environmental assessment is also available for review at the Hampton B. Allen Library, 120 South Greene Street, Wadesboro North Carolina, 28170, phone: (704) 694–5177; Pee Dee Electric Membership Corporation, Highway 52 South Wadesboro, North Carolina 28170, phone (704) 694–2114; Leath Memorial Library, 412 East Franklin Street, Rockingham, North Carolina 28379, phone: (910) 895–6337; Person County Library, 319 South Main Street, Roxboro, North Carolina 27573, phone: (336) 597–7881; Office of the County Manager, 304 South Morgan Street, Room 212, Roxboro, North Carolina 27573, phone (336) 597–1720; Holly Springs Town Hall, 128 South Main Street, Holly Springs, North Carolina 27540; Fuquay-Varina Library, 133 South Fuquay Avenue, Fuquay-Varina, North Carolina 27526, phone (919) 557–2788; Eva H. Perry Library, 2100 Shepherd's Vineyard Drive, Apex, North Carolina 27502, phone (919) 387–2100; and the Office of the Town Clerk, Holly Springs Town Hall, 128 South Main Street, Holly Springs, North Carolina 27540.

Questions and comments should be sent to RUS at the address provided. RUS will accept questions and comments on the environmental assessment for 30 days from the date of publication of this notice.

Any final action by RUS related to the proposed project will be subject to, and contingent upon, compliance with all relevant Federal environmental laws and regulations and completion of environmental review procedures as prescribed by the 7 CFR Part 1794, Environmental Policies and Procedures.

Dated: December 14, 2004.

Glendon D. Deal,

Director, Engineering and Environmental Staff, Water and Environmental Program, Rural Utilities Service.

[FR Doc. 04–27760 Filed 12–17–04; 8:45 am]

BILLING CODE 3410–15–P

DEPARTMENT OF COMMERCE

International Trade Administration

[A–469–814]

Chlorinated Isocyanurates From Spain: Notice of Preliminary Determination of Sales at Less Than Fair Value and Postponement of Final Determination

AGENCY: Import Administration, International Trade Administration, Department of Commerce.

DATES: *Effective Dates:* December 20, 2004.

FOR FURTHER INFORMATION CONTACT: Paige Rivas at (202) 482–0651; AD/CVD Operations, Office 4, Import Administration, Room 1870, International Trade Administration, U.S. Department of Commerce, 14th Street and Constitution Avenue, NW., Washington, DC 20230.

Preliminary Determination

We preliminarily determine that chlorinated isocyanurates (chlorinated isos) from Spain are being, or are likely to be, sold in the United States at less than fair value (LTFV), as provided in section 733 of the Tariff Act of 1930, as amended (the Act). The estimated margins of sales at LTFV are shown in the ''Suspension of Liquidation'' section of this notice. Interested parties are invited to comment on this preliminary determination. We will make our final determination no later than 135 days after the date of publication of this preliminary determination.

SUPPLEMENTARY INFORMATION:

Case History

On May 14, 2004, the Department of Commerce (the Department) received a petition for the imposition of antidumping duties on imports of chlorinated isos from Spain, filed in proper form, by Clearon Corporation and Occidental Chemical Corporation (collectively, the petitioners). *See* Letter from the petitioners to Secretary Evans of the Department and Secretary Abbott of the U.S. International Trade Commission (ITC), ''Petition for the Imposition of Antidumping Duties: Chlorinated Isocyanurates from the People's Republic of China and Spain,'' dated May 14, 2004 (the Petition). Pursuant to section 773(b) of the Act, the petitioners provided information in the petition demonstrating reasonable grounds to believe or suspect that sales in the home market of Spain were made at prices below the fully absorbed cost of production (COP) and, accordingly, requested that the Department conduct a country-wide sales-below-COP investigation in connection with the requested antidumping duty investigation. The Department initiated this antidumping duty investigation, along with a country-wide sales-below-COP investigation, of chlorinated isos from Spain on June 3, 2004. *See Initiation of Antidumping Duty Investigations: Chlorinated Isocyanurates From the People's Republic of China and Spain*, 69 FR 32488 (June 10, 2004) (*Initiation Notice*). Since the initiation of the investigation, the following events have occurred.

On June 28, 2004, the ITC preliminarily determined that there is a reasonable indication that an industry in the United States is materially injured by reason of chlorinated isos imported from Spain that are alleged to be sold in the United States at LTFV. *See Chlorinated Isocyanurates from China and Spain*, Investigations Nos. 731–TA–1082 and 1083 (*Preliminary*), 2004 ITC Lexis 623 (July 2004).

On June 22, 2004, the Department issued proposed product characteristics to interested parties. Aragonesas Delsa S.A. (Delsa) and the petitioners submitted comments on the proposed product characteristics on July 7, 2004, while Delsa submitted rebuttal comments on July 14, 2004. After an analysis of interested parties' comments, the Department issued revised product characteristics and model match hierarchy on July 16, 2004, inviting interested parties to comment. On July 21, 2004, Delsa and the petitioners informed the Department that they agree with the Department's revised product characteristics and model match hierarchy. On September 3, 2004, the Department further revised the product characteristics and model match criteria being reported by Delsa in its response to Sections B and C of the antidumping duty questionnaire in order to accommodate a more complete range of free available chlorine content and packaging sizes.

On June 28, 2004, the Department issued Section A of its antidumping duty questionnaire to Delsa, to which Delsa responded on July 21, 2004.[1] On

[1] Section A of the questionnaire requests general information concerning a company's corporate structure and business practices, the merchandise

July 16, 2004, the Department issued Sections B–E of its antidumping duty questionnaire to Delsa, and Delsa responded to Sections B–D on August 23, 2004. The Department issued supplemental questionnaires for Sections A–D to Delsa on August 31, September 7, September 13, October 22, October 29, November 5, and November 29, 2004. Delsa filed responses to these supplemental questionnaires on September 8, September 28, October 4, November 12, November 22, 2004, and December 2, 2004, respectively.

On September 16, 2004, the petitioners made a timely request pursuant to section 733(c)(1)(A) of the Act and 19 CFR 351.205(e) for postponement of the preliminary determination for 50 days or until December 10, 2004. On October 1, 2004, pursuant to section 733(c)(1)(A) of the Act, the Department postponed the preliminary determination of this investigation by 50 days, from October 21, 2004, until December 10, 2004. *See Notice of Postponement of Preliminary Antidumping Duty Determinations: Chlorinated Isocyanurates From the People's Republic of China and Spain*, 69 FR 60352 (October 8, 2004).

Postponement of the Final Determination

Section 735(a)(2)(A) of the Act provides that a final determination may be postponed until not later than 135 days after the date of the publication of the preliminary determination if, in the event of an affirmative preliminary determination, a request for such postponement is made by exporters who account for a significant proportion of exports of the subject merchandise, or, in the event of a negative preliminary determination, a request for such postponement is made by the petitioners. The Department's regulations, at 19 CFR 351.210(e)(2), require that requests by respondents for postponement of a final determination be accompanied by a request for an extension of the provisional measures from a four-month period to not more than six months.

On November 24, 2004, Delsa requested that, in the event of an affirmative preliminary determination in this investigation, the Department postpone its final determination until 135 days after the publication of the preliminary determination. Delsa also included a request to extend the provisional measures to not more than 135 days after the publication of the preliminary determination. Accordingly, because we have made an affirmative preliminary determination, and the requesting party accounts for a significant proportion of exports of the subject merchandise, we have postponed the final determination until not later than 135 days after the date of the publication of the preliminary determination.

Period of Investigation

The period of investigation (POI) is April 1, 2003, through March 31, 2004. *See* 19 CFR 351.204(b)(1). This period corresponds to the four most recent fiscal quarters prior to the filing of the petition.

Scope of Investigation

The products covered by this investigation are chlorinated isos. Chlorinated isos are derivatives of cyanuric acid, described as chlorinated s-triazine triones. There are three primary chemical compositions of chlorinated isos: (1) trichloroisocyanuric acid ($C1_3$ $(NCO)_3$), (2) sodium dichloroisocyanurate (dihydrate) ($NaCl_2(NCO)_3 \bullet 2H_2$ O), and (3) sodium dichloroisocyanurate (anhydrous) ($NaCl_2(NCO)_3$). Chlorinated isos are available in powder, granular, and tabletted forms. This investigation cover all chlorinated isos.

Chlorinated isos are currently classifiable under subheading 2933.69.6050 of the Harmonized Tariff Schedule of the United States (HTSUS). This tariff classification represents a basket category that includes chlorinated isos and other compounds including an unfused triazine ring. Although the HTSUS subheading is provided for convenience and customs purposes, the written description of the merchandise remains dispositive.

Scope Comments

The Department set aside a period for all interested parties to raise issues regarding product coverage of the scope of the investigation. *See Initiation Notice*, 69 FR at 32489. Arch Chemicals, Inc. (Arch) submitted comments on July 1, 2004, and rebuttal comments on July 12, 2004, and July 30, 2004, in which it argued that its patented chlorinated isos tablet should be excluded from the scope of this investigation. Petitioners submitted comments on June 30, 2004, and rebuttal comments on July 21, 2004, in which they stated their opposition to excluding Arch's patented chlorinated isos tablet from the scope. On October 21, 2004, the Department held ex-parte meetings with Arch's counsel to discuss its scope exclusion request (*see* ex-parte memoranda to the file dated October 22, and 28, 2004). Based on our analysis of the record evidence, we preliminarily find that Arch's patented chlorinated isos tablet is included within the scope of this antidumping duty investigation. For a detailed discussion of Arch and the petitioners' comments, as well as the Department's position that the scope of this order includes Arch's patented chlorinated isos tablet, *see* Memorandum from Holly A. Kuga, Senior Office Director for Office 4, to Barbara E. Tillman, Acting Deputy Assistant Secretary for Import Administration, ''Scope of the Antidumping Duty Investigations of Chlorinated Isocyanurates from the People's Republic of China and Spain,'' dated December 10, 2004, which is on file in the Central Records Unit (CRU), Room B–099 of the Main Commerce Building.

Selection of Respondent

Section 777A(c)(1) of the Act directs the Department to calculate individual dumping margins for each known exporter and producer of the subject merchandise. Where it is not practicable to examine all known producers/exporters of subject merchandise, section 777A(c)(2) of the Act permits the Department to investigate either (1) a sample of exporters, producers, or types of products that is statistically valid based on the information available at the time of selection, or (2) exporters and producers accounting for the largest volume of the subject merchandise from the exporting country that can reasonably be examined. As guidance in selecting respondents, the petitioners stated that Delsa is believed to account for most, if not all, of the exports of chlorinated isos into the United States. *See* Petition at 23. We obtained import statistics from U.S. Customs and Border Protection (CBP) and confirmed this claim. In addition, the ITC, in its preliminary determination, identified Delsa as the only exporter of subject merchandise from Spain to the United States during the POI. *See Preliminary* at 3. Therefore, we selected Delsa as the mandatory respondent in this investigation.

under investigation, and the manner in which the company sells that merchandise in all markets. Section B requests a complete listing of all of the company's home market sales of the foreign like product or, if the home market is not viable, sales of the foreign like product in the most appropriate third-country market (this section is not applicable to respondents in non-market economy cases). Section C requests a complete listing of the company's U.S. sales of subject merchandise. Section D requests information on the cost of production of the foreign like product and the constructed value of the merchandise under investigation. Section E requests information on further manufacturing. *See http://ia.ita.doc.gov/questionnaires/questionnaires-ad.html*, which can be accessed directly on the Web, for more information.

Product Comparisons

In accordance with section 771(16) of the Act, all products manufactured by the respondents in the home market and covered by the description contained in the ''Scope of Investigation'' section, above, and sold in the home market in the ordinary course of trade during the POI are considered to be foreign like products for purposes of determining appropriate product comparisons to U.S. sales. We have relied upon four criteria to match U.S. sales of subject merchandise to comparison-market sales of the foreign like product: (1) Chemical structure; (2) free available chlorine (FAC) content;[2] (3) physical form; and (4) packaging. Where there were no sales of identical merchandise in the home market made in the ordinary course of trade, we compared U.S. sales to sales of the most similar foreign like product made in the ordinary course of trade, based on the characteristics listed above. Where we were unable to match U.S. sales to home market sales of the foreign like product, we based normal value (NV) on constructed value (CV).

Fair Value Comparisons

To determine whether sales of chlorinated isos from Spain were made in the United States at LTFV, we compared the export price (EP) to the NV, as described in the ''Export Price'' and ''Normal Value'' sections of this notice. In accordance with section 777A(d)(1)(A)(i) of the Act, we calculated weighted-average EPs. We compared these to weighted-average NVs in Spain on the basis of shipment date. We determined this to be the appropriate date of sale because shipment date reflects the time at which the material terms of sale were established.

Export Price

For the price to the United States, we used EP as defined in section 772(a) of the Act, because the subject merchandise was sold by Delsa before the date of importation to unaffiliated purchasers in the United States. Section 772(a) of the Act defines EP as the price at which the subject merchandise is first sold (or agreed to be sold) before the date of importation by the producer or exporter of the subject merchandise outside of the United States to an unaffiliated purchaser in the United States or to an unaffiliated purchaser for exportation to the United States, as adjusted under subsection 772(c) of the Act. We based EP on packed and delivered prices to unaffiliated purchasers in the United States. We have excluded U.S. sales of Dichlor from our analysis for the purposes of the preliminary determination. For additional information, *see* Memorandum from Mark Manning, Acting Program Manager, to Holly A. Kuga, Senior Office Director for Office 4, ''Whether to Exclude Products from the Respondent's Universe of Sales,'' dated December 10, 2004 (Products Memorandum).

In accordance with section 772(c)(2)(A) of the Act, we reduced Delsa's starting price by billing adjustments and movement expenses. Billing adjustments included early payment discounts and other billing adjustments (which include corrections to invoices). Movement expenses included, where appropriate, inland freight, brokerage and handling, and international freight.

Normal Value

A. Selection of Comparison Market

Section 773(a)(1) of the Act directs the Department to base NV on the price at which the foreign like product is sold in the home market, provided that, among other things, the merchandise is sold in sufficient quantities in the home market (or has sufficient aggregate value, if quantity is inappropriate) and that there is no particular market situation in the home market that prevents a proper comparison with the EP transaction. The statute provides that the total quantity of home market sales of foreign like product (or value) will normally be considered sufficient if it is five percent or more of the aggregate quantity (or value) of sales of the subject merchandise to the United States. Based on a comparison of the aggregate quantity of home market sales of foreign like product and U.S. sales of subject merchandise by Delsa, we determined that the quantity of foreign like product sold in Spain is more than five percent of the quantity of U.S. sales of subject merchandise. Accordingly, for Delsa, we based NV on home market (HM) sales. We have excluded HM sales of Dichlor from our analysis for the purposes of the preliminary determination. For additional information, *see* Products Memorandum.

In calculating NV, we made adjustments as detailed in the ''Calculation of Normal Value Based on Home-Market Prices'' and ''Calculation of Normal Value Based on Constructed Value'' sections below.

B. Affiliated-Party Transactions and Arm's-Length Test

Delsa reported that it sold chlorinated isos in the comparison market only to unaffiliated customers. Therefore, application of the arm's-length test is unnecessary.

C. Cost of Production Analysis

In the original petition, the petitioners alleged that sales of chlorinated isos in the home market were made at prices below the fully absorbed COP and, accordingly, requested that the Department conduct a country-wide sales-below-cost investigation. Based upon the comparison of the petition's adjusted prices and COP for the foreign like product, and in accordance with section 773(b)(2)(A)(i) of the Act, we found reasonable grounds to believe or suspect that sales of chlorinated isos in Spain were made at prices below the COP. *See Initiation Notice*. As a result, the Department has conducted an investigation to determine whether Desla made sales in the home market at prices below its COP during the POI within the meaning of section 773(b) of the Act. Our COP analysis is described below.

1. Calculation of Cost of Production

In accordance with section 773(b)(3) of the Act, we calculated a weighted-average COP for Delsa based on the sum of the cost of materials and fabrication of the foreign like product, plus amounts for the home market general and administrative (G&A) expenses and interest expenses. We relied on the submitted COP data, except as noted below:

We made the following adjustments to Delsa's submitted COP data: (1) We adjusted Delsa's reported cost of chlorine gas to reflect the average market price in accordance with 19 CFR 351.407(b); (2) we revised the startup period, used in the calculation of Delsa's startup adjustment, from the reported start-up period. We also revised the startup adjustment calculation to reflect only those production costs incurred at the Sabiñánigo plant (*i.e.*, the plant that incurred the start-up costs); (3) because the Department considers labor expenses to be variable expenses (*i.e.*, expenses that vary depending upon production levels), we reclassified Delsa's labor expenses from its reported fixed costs to variable costs; (4) we adjusted Delsa's calculation of its G&A expense ratio by adding certain G&A expenses to the numerator of the ratio.

[2] FAC is the portion of the total chlorine remaining in chlorinated water that has not reacted with contaminants, and is ''free'' to go to work killing bacteria and other contaminants. It is formed when Dichlor or Trichlor or chlorine gas is mixed with water and dissociates. The FAC is the main pool water disinfectant/sanitizer.

Because packing expenses were included in Delsa's reported materials costs, we added packing costs to the denominator of Delsa's G&A expense ratio; and (5) we adjusted Delsa's interest expense ratio by adding the Uralita Group's net foreign exchange losses to the numerator of the interest expense ratio. *See* Memorandum from LaVonne Clark, Case Accountant, to Neal Halper, Director of the Office of Accounting, ''Cost of Production and Constructed Value Calculation Adjustments for the Preliminary Determination,'' dated December 10, 2004 (Cost Calculation Memorandum), for additional information.

2. Test of Home Market Sales Prices

As required by section 773(b)(1) of the Act, we compared Delsa's adjusted weighted-average COP, on a product-specific basis, to the HM prices, less any applicable movement charges, taxes, rebates, commissions, and other direct and indirect selling expenses to determine whether these sales had been made at prices below the COP. For those sales that we determined were made below COP, we examined whether they had been made within an extended period of time in substantial quantities, and whether such prices were sufficient to permit the recovery of all costs within a reasonable period of time. *See* section 773(b)(1)(A) and (B) of the Act.

3. Results of the COP Test

Pursuant to section 773(b)(2)(B) and (C) of the Act, when less than 20 percent of the respondent's sales of a given product were at prices less than the COP, we did not disregard any below-cost sales of that product because the below-cost sales were not made in substantial quantities within an extended period of time. When 20 percent or more of the respondent's sales of a given product during the POI were at prices less than the COP, we determined that the below-cost sales were made in substantial quantities within an extended period of time pursuant to section 773(b)(2)(B) and (C) of the Act. In such cases, we disregarded the below-cost sales because, based on comparisons of prices to weighted-average COPs for the POI, we determined that these sales were at prices which would not permit recovery of all costs within a reasonable period of time in accordance with section 773(b)(2)(D) of the Act. Based on this test, we disregarded below-cost sales. *See* Cost Calculation Memorandum, for additional information.

D. Calculation of Normal Value Based on Home Market Prices

We determined price-based NVs for Delsa as follows. Where applicable, we made adjustments for differences in cost attributable to differences in physical characteristics of the merchandise pursuant to section 773(a)(6)(C)(ii) of the Act, as well as for differences in circumstances of sale (COS) attributed to imputed credit expenses in accordance with section 773(a)(6)(C)(iii) of the Act and 19 CFR 351.410. We also made adjustments for billing adjustments (early payment discounts and quantity rebates). In addition, we deducted HM movement expenses pursuant to section 773(a)(6)(B)(ii) of the Act. We also made adjustments, pursuant to 19 CFR 351.410(e), for indirect selling expenses incurred on HM or U.S. sales where commissions were granted on sales in one market but not in the other (the commission offset). Finally, we deducted HM packing costs and added U.S. packing costs in accordance with section 773(a)(6)(A) and (B)(i) of the Act. We used the amounts reported by Delsa for packing even though these amounts include the cost of tableting (which is appropriately considered a cost of manufacture) because Delsa did not provide a breakdown of its tableting and packing cost. *See* Memorandum from Paige Rivas, Senior International Trade Compliance Analyst, to the File, ''Calculation Memorandum for Aragonesas Delsa S.A.,'' dated December 10, 2004 (Sales Calculation Memorandum).

We made the following adjustments to the expenses reported by Delsa. First, we recalculated credit expense for two home market sales by assigning the date of the Delsa's last supplemental response (December 2, 2004) as the payment date for these unpaid sales. Second, we recalculated the movement expenses on several sales to include freight expenses associated with the return of subject merchandise for the corresponding invoices and customers. *See Sales Calculation Memorandum*.

E. Calculation of Normal Value Based on Constructed Value

Section 773(a)(4) of the Act provides that, where NV cannot be based on comparison-market sales, NV may be based on CV. Accordingly, for those models of chlorinated isos for which we could not determine the NV based on comparison-market sales, either because there were no sales of a comparable product or all sales of the comparison products failed the COP test, we based NV on CV.

In accordance with section 773(e)(1) and (e)(2)(A) of the Act, we calculated CV based on the sum of the cost of materials and fabrication for the foreign like product, plus amounts for selling expenses, G&A, interest, profit and U.S. packing costs. We calculated the cost of materials and fabrication based on the methodology described in the ''Calculation of Cost of Production'' section of this notice. In accordance with section 773(e)(2)(A) of the Act, we based selling expenses, G&A, and profit on the amounts incurred and realized by Delsa, in connection with the production and sale of the foreign like product in the ordinary course of trade for consumption in the foreign country.

F. Level of Trade/Constructed Export Price Offset

In accordance with section 773(a)(1)(B)(i) of the Act, to the extent practicable, we determined NV based on sales in the HM market at the same level of trade (LOT) as the U.S. sales. The NV LOT is that of the starting-price sale in the HM market or, when the NV is based on CV, that of the sales from which we derive SG&A expenses and profit. For EP sales, the U.S. LOT is also the level of the starting-price sale, which is usually the price of the sale from the exporter to the importer.

To determine whether HM market sales are at a different LOT than EP or CEP transactions, we examine stages in the marketing process and selling functions along the chain of distribution between the producer and the unaffiliated customer. *See* 19 CFR 351.412(c)(2). Different stages of marketing necessarily involve differences in selling functions, but differences in selling functions, even substantial ones, are not alone sufficient to establish a difference in the LOT. Similarly, while customer categories such as ''distributor'' and ''wholesaler'' may be useful in identifying different LOTs, they are insufficient in themselves to establish that there is a difference in the LOT.

If the HM sales are at a different LOT, and the difference affects price comparability with U.S. sales, as manifested in a pattern of consistent price differences between the sales on which NV is based and HM sales at the LOT of the export transaction, we make an LOT adjustment pursuant to section 773(a)(7)(A) of the Act. *See Final Determination of Sales at Less Than Fair Value: Greenhouse Tomatoes From Canada*, 67 FR 8781 (February 26, 2002).

To determine whether an LOT adjustment is warranted, we obtained information from Delsa about the

marketing stages at which its reported U.S. and HM sales were made, including a description of the selling activities performed by Delsa for its one channel of distribution, *i.e.*, from the Sabiñanigo plant directly to the customer. In identifying LOTs for EP and HM sales, we considered the selling functions reflected in the starting price before any adjustments. Generally, if the claimed LOTs are the same, the functions and activities of the seller should be similar. Conversely, if a party claims that LOTs are different for different groups of sales, the functions and activities of the seller should be dissimilar.

In conducting our LOT analysis, we took into account the specific customer types, channels of distribution, and selling functions. We preliminarily determine that in both the comparison and U.S. markets, two LOTs exist for Delsa's sales.[3] The two LOTs in each market are attributed to the two different types of Delsa's customers, industrial customers and retail level customers. The differences in the LOTs are based on the higher level of selling activity associated with the retail level customers in comparison to the industrial customers. For example, Delsa states that its retail level customers require significantly more services, including frequent visits to new retail level customers or potential customers, more frequent placement of orders in smaller quantities, and more frequent rebates, than industrial customers.

In addition, after comparing the customer types and selling functions associated with Delsa's HM sales to the customer types and selling functions associated with its U.S. sales, we determine that each LOT in the U.S. market had a corresponding LOT in the HM and the selling activities between the corresponding LOTs were virtually identical in each market. The industrial users in both the U.S. market and HM constitute one LOT and the retail level customers in both the U.S. market and HM constitute another LOT. For the industrial user LOT, the selling functions in the U.S. market and the HM were identical and at identical levels of activity except for two selling functions, *i.e.*, rebates and commissions. For the retail level LOT, the selling functions in the U.S. market and HM were identical and at identical levels of activity except for one selling function, *i.e.*, rebates. Accordingly, we made comparisons at the same LOT, and, therefore, it was not necessary to make an LOT adjustment.

[3] We note that Delsa reported two LOTs in each market in its questionnaire responses.

For a further discussion of our LOT analysis, *see* the Memorandum from Paige Rivas, Senior International Trade Compliance Analyst, to Holly A. Kuga, Senior Office Director for Office IV, ''Level of Trade Analysis: Aragonesas Delsa S.A.'' dated December 10, 2004.

G. Currency Conversions

We made currency conversions to U.S. dollars in accordance with section 773A of the Act based on exchange rates in effect on the dates of the U.S. sales, as obtained from the Federal Reserve Bank, the Department's preferred source for exchange rates.

Verification

In accordance with section 782(i) of the Act, we intend to verify all information relied upon in making our final determination.

All Others Rate

Section 735(c)(5)(A) of the Act provides for the use of an ''all others'' rate, which is applied to non-investigated firms. *See Statement of Administrative Action*, H.R. Doc. No. 103–316, Vol. I (1994). This section states that the all others rate shall generally be an amount equal to the weighted-average dumping margins established for exporters and producers individually investigated, excluding any zero and *de minimis* margins, and any margins based entirely upon the facts available. Therefore, we have preliminarily assigned to all other exporters of chlorinated isos from Spain a margin that is based on the margin calculated for the mandatory respondent.

Suspension of Liquidation

In accordance with section 733(d)(2) of the Act, we are directing CBP to suspend liquidation of all shipments of chlorinated isos from Spain that are entered, or withdrawn from warehouse, for consumption on or after the date of publication of this notice in the **Federal Register**. We will instruct CBP to require a cash deposit or the posting of a bond equal to the weighted-average amount by which the NV exceeds the U.S. price, as indicated below. These suspension-of-liquidation instructions will remain in effect until further notice. The weighted-average dumping margins are as follows:

Manufacturer/exporter	Margin (percent)
Delsa	12.13
All Others	12.13

Disclosure

The Department will disclose to the parties to the proceeding the calculations performed in the preliminary determination within five days of the date of publication of this notice, in accordance with 19 CFR 351.224(b).

International Trade Commission Notification

In accordance with section 733(f) of the Act, we have notified the ITC of our preliminary sales at LTFV determination. If our final antidumping determination is affirmative, section 735(b)(2) of the Act requires that the ITC makes a final determination on whether imports of chlorinated isos from Spain are materially injuring or threatening material injury to the U.S. industry before the later of 120 days after the date of this preliminary determination or 45 days after the date of our final determination. Because we have postponed the deadline for the final determination to 135 days from the date of publication of this preliminary determination, the ITC will make its final determination within 45 days of our final determination.

Public Comment

Case briefs for this investigation must be submitted no later than one week after the issuance of the verification report. Rebuttal briefs must be filed within five days after the deadline for submission of case briefs. A list of authorities used, a table of contents, and an executive summary of issues should accompany any briefs submitted to the Department. Executive summaries should be limited to five pages total, including footnotes. Further, the Department respectfully requests that all parties submitting written comments also provide the Department with an additional copy of the public version of any such comments on diskette.

Section 774 of the Act provides that the Department will hold a hearing to afford interested parties an opportunity to comment on arguments raised in case or rebuttal briefs, provided that such a hearing is requested by an interested party. If a request for a hearing is made in an investigation, the hearing normally will be held two days after the deadline for submission of the rebuttal briefs, at the U.S. Department of Commerce, 14th Street and Constitution Avenue, NW., Washington, DC 20230. Parties should confirm by telephone the time, date, and place of the hearing 48 hours before the scheduled time.

Interested parties who wish to request a hearing, or to participate in a hearing

if one is requested, must submit a written request within 30 days of the publication of this notice. Requests should specify the number of participants and provide a list of the issues to be discussed. Oral presentations will be limited to issues raised in the briefs.

As noted above, the Department will make its final determination within 135 days after the date of the publication of the preliminary determination.

This determination is issued and published pursuant to section 733(f) and 777(i)(1) of the Act.

Dated: December 10, 2004.

Joseph A. Spetrini,

Acting Assistant Secretary for Import Administration.

[FR Doc. E4–3742 Filed 12–17–04; 8:45 am]

BILLING CODE 3510–DS–P

DEPARTMENT OF COMMERCE

International Trade Administration

[A–588–824]

Certain Corrosion-Resistant Carbon Steel Flat Products From Japan: Initiation and Preliminary Results of Antidumping Duty Changed Circumstances Review and Intent To Revoke, in Part

AGENCY: Import Administration, International Trade Administration, Department of Commerce.

SUMMARY: In accordance with 19 CFR 351.216(b), Taiho Corporation of America (Taiho) filed a request for a changed circumstances review of the antidumping duty order on certain corrosion-resistant carbon steel flat products from Japan with respect to 24 products lined with a bushing alloy as defined below. In response to this request, the Department of Commerce is initiating a changed circumstances review and issuing a notice of preliminary intent to revoke in part the order on certain corrosion-resistant carbon steel flat products from Japan with respect to corrosion-resistant carbon steel coil. Interested parties are invited to comment on these preliminary results.

DATES: *Effective Date:* December 20, 2004.

FOR FURTHER INFORMATION CONTACT: George McMahon, Christopher Hargett, or James Terpstra, AD/CVD Operations, Office 3, Import Administration, International Trade Administration, U.S. Department of Commerce, 14th Street and Constitution Avenue, NW., Washington, DC 20230; telephone (202) 482–1167, (202) 482–4161, or (202) 482–3965, respectively.

SUPPLEMENTARY INFORMATION:

Background

On August 19, 1993, the Department of Commerce (the Department) published an antidumping duty order on certain corrosion-resistant carbon steel flat products from Japan. *See Antidumping Duty Orders: Certain Corrosion-Resistant Carbon Steel Flat Products From Japan*, 58 FR 44163 (August 19, 1993). On October 26, 2004, Taiho requested that the Department revoke the antidumping duty order on 24 separate bushing alloy-lined corrosion-resistant carbon steel coil products from Japan through the initiation of a changed circumstances review. Taiho also requested that the Department conduct an expedited changed circumstances review pursuant to 19 CFR 351.221(c)(3)(ii).

Taiho asserts that the domestic producers do not have any interest in the continuation of the order with respect to the 24 products. The Department received a letter on November 22, 2004, on behalf of United States Steel Corporation stating they have no objection to the initiation of the changed circumstances review, and on December 3, 2004, received a letter on behalf of International Steel Group, attesting to their lack of interest regarding continuation of the order with respect to the specified 24 products.

Scope of the Order

The products subject to this order include flat-rolled carbon steel products, of rectangular shape, either clad, plated, or coated with corrosion-resistant metals such as zinc, aluminum, or zinc-, aluminum-, nickel- or iron-based alloys, whether or not corrugated or painted, varnished or coated with plastics or other nonmetallic substances in addition to the metallic coating, in coils (whether or not in successively superimposed layers) and of a width of 0.5 inch or greater, or in straight lengths which, if of a thickness less than 4.75 millimeters, are of a width of 0.5 inch or greater and which measures at least 10 times the thickness or if of a thickness of 4.75 millimeters or more are of a width which exceeds 150 millimeters and measures at least twice the thickness, as currently classifiable in the Harmonized Tariff Schedule under item numbers: 7210.30.0030, 7210.30.0060, 7210.41.0000, 7210.49.0030, 7210.49.0090, 7210.61.0000, 7210.69.0000, 7210.70.6030, 7210.70.6060, 7210.70.6090, 7210.90.1000, 7210.90.6000, 7210.90.9000, 7212.20.0000, 7212.30.1030, 7212.30.1090, 7212.30.3000, 7212.30.5000, 7212.40.1000, 7212.40.5000, 7212.50.0000, 7212.60.0000, 7215.90.1000, 7215.90.3000, 7215.90.5000, 7217.20.1500, 7217.30.1530, 7217.30.1560, 7217.90.1000, 7217.90.5030, 7217.90.5060, and 7217.90.5090.

Included in the order are flat-rolled products of nonrectangular cross-section where such cross-section is achieved subsequent to the rolling process (*i.e.*, products which have been ''worked after rolling'')—for example, products which have been bevelled or rounded at the edges.

Excluded from the scope of the order are flat-rolled steel products either plated or coated with tin, lead, chromium, chromium oxides, both tin and lead (''terne plate''), or both chromium and chromium oxides (''tin-free steel''), whether or not painted, varnished or coated with plastics or other nonmetallic substances in addition to the metallic coating. Also excluded from the scope of the order are certain clad stainless flat-rolled products, which are three-layered corrosion-resistant carbon steel flat-rolled products less than 4.75 millimeters in composite thickness that consist of a carbon steel flat-rolled product clad on both sides with stainless steel in a 20%–60%–20% ratio. *See Antidumping Duty Orders: Certain Corrosion-Resistant Carbon Steel Flat Products From Japan*, 58 FR 44163 (August 19, 1993).

Also excluded from the scope of this order are imports of certain corrosion-resistant carbon steel flat products meeting the following specifications: widths ranging from 10 millimeters (0.394 inches) through 100 millimeters (3.94 inches); thicknesses, including coatings, ranging from 0.11 millimeters (0.004 inches) through 0.60 millimeters (0.024 inches); and a coating that is from 0.003 millimeters (0.00012 inches) through 0.005 millimeters (0.000196 inches) in thickness and that is comprised of three evenly applied layers, the first layer consisting of 99% zinc, 0.5% cobalt, and 0.5% molybdenum, followed by a layer consisting of chromate, and finally a layer consisting of silicate. *See Certain Corrosion-Resistant Carbon Steel Flat Products From Japan: Final Results of Changed Circumstances Antidumping Duty Administrative Review, and Revocation in Part of Antidumping Duty Order*, 62 FR 66848 (December 22, 1997).

Also excluded from the scope of this order are imports of subject

merchandise meeting all of the following criteria: (1) Widths ranging from 10 millimeters (0.394 inches) through 100 millimeters (3.94 inches); (2) thicknesses, including coatings, ranging from 0.11 millimeters (0.004 inches) through 0.60 millimeters (0.024 inches); and (3) a coating that is from 0.003 millimeters (0.00012 inches) through 0.005 millimeters (0.000196 inches) in thickness and that is comprised of either two evenly applied layers, the first layer consisting of 99% zinc, 0.5% cobalt, and 0.5% molybdenum, followed by a layer consisting of chromate, or three evenly applied layers, the first layer consisting of 99% zinc, 0.5% cobalt, and 0.5% molybdenum followed by a layer consisting of chromate, and finally a layer consisting of silicate. *See Certain Corrosion-Resistant Carbon Steel Flat Products From Japan: Final Results of Changed Circumstances Antidumping Duty Administrative Review, and Revocation in Part of Antidumping Duty Order*, 64 FR 14861 (March 29, 1999).

Also excluded from the scope of this order are: (1) Carbon steel flat products measuring 1.84 mm in thickness and 43.6 mm or 16.1 mm in width consisting of carbon steel coil (SAE 1008) clad with an aluminum alloy that is balance aluminum, 20% tin, 1% copper, 0.3% silicon, 0.15% nickel, less than 1% other materials and meeting the requirements of SAE standard 783 for Bearing and Bushing Alloys; and (2) carbon steel flat products measuring 0.97 mm in thickness and 20 mm in width consisting of carbon steel coil (SAE 1008) with a two-layer lining, the first layer consisting of a copper-lead alloy powder that is balance copper, 9% to 11% tin, 9% to 11% lead, less than 1% zinc, less than 1% other materials and meeting the requirements of SAE standard 792 for bearing and bushing alloys, the second layer consisting of 45% to 55% lead, 38% to 50% PTFE, 3% to 5% molybdenum disulfide and less than 2% other materials. *See Certain Corrosion-Resistant Carbon Steel Flat Products From Japan: Final Results of Changed Circumstances Review, and Revocation in Part of Antidumping Duty Order*, 64 FR 57032 (October 22, 1999).

Also excluded from the scope of the order are imports of doctor blades meeting the following specifications: Carbon steel coil or strip, plated with nickel phosphorous, having a thickness of 0.1524 millimeters (0.006 inches), a width between 31.75 millimeters (1.25 inches) and 50.80 millimeters (2.00 inches), a core hardness between 580 to 630 HV, a surface hardness between 900–990 HV; the carbon steel coil or strip consists of the following elements identified in percentage by weight: 0.90% to 1.05% carbon; 0.15% to 0.35% silicon; 0.30% to 0.50% manganese; less than or equal to 0.03% of phosphorous; less than or equal to 0.006% of sulfur; other elements representing 0.24%; and the remainder of iron. *See Certain Corrosion-Resistant Carbon Steel Flat Products From Japan: Final Results of Changed Circumstances Review, and Revocation in Part of Antidumping Duty Order*, 65 FR 53983 (September 6, 2000).

Also excluded from the scope of the order are imports of carbon steel flat products meeting the following specifications: Carbon steel flat products measuring 1.64 millimeters in thickness and 19.5 millimeters in width consisting of carbon steel coil (SAE 1008) with a lining clad with an aluminum alloy that is balance aluminum; 10 to 15% tin; 1 to 3% lead; 0.7 to 1.3% copper; 1.8 to 3.5% silicon; 0.1 to 0.7% chromium; less than 1% other materials and meeting the requirements of SAE standard 783 for Bearing and Bushing Alloys. *See Certain Corrosion-Resistant Carbon Steel Flat Products From Japan: Final Results of Changed Circumstances Review, and Revocation in Part of Antidumping Duty Order*, 66 FR 8778 (February 2, 2001).

Also excluded from the scope of the order are carbon steel flat products meeting the following specifications: (1) Carbon steel flat products measuring 0.975 millimeters in thickness and 8.8 millimeters in width consisting of carbon steel coil (SAE 1012) clad with a two-layer lining, the first layer consisting of a copper-lead alloy powder that is balance copper, 9%–11% tin, 9%–11% lead, maximum 1% other materials and meeting the requirements of SAE standard 792 for Bearing and Bushing Alloys, the second layer consisting of 13%–17% carbon, 13%–17% aromatic polyester, with a balance (approx. 66%–74%) of polytetrafluorethylene (PTFE); and (2) carbon steel flat products measuring 1.02 millimeters in thickness and 10.7 millimeters in width consisting of carbon steel coil (SAE 1008) with a two-layer lining, the first layer consisting of a copper-lead alloy powder that is balance copper, 9%–11% tin, 9%–11% lead, less than 0.35% iron, and meeting the requirements of SAE standard 792 for bearing and bushing alloys, the second layer consisting of 45%–55% lead, 3%–5% molybdenum disulfide, with a balance (approx. 40%–52%) of polytetrafluorethylene (PTFE). *See Certain Corrosion-Resistant Carbon Steel Flat Products From Japan: Notice of Final Results of Changed Circumstances Review, and Revocation in Part of Antidumping Duty Order*, 66 FR 15075 (March 15, 2001).

Also excluded from this order are products meeting the following specifications: Carbon steel coil or strip, measuring 1.93 millimeters or 2.75 millimeters (0.076 inches or 0.108 inches) in thickness, 87.3 millimeters or 99 millimeters (3.437 inches or 3.900 inches) in width, with a low carbon steel back comprised of: Carbon under 8%, manganese under 0.4%, phosphorous under 0.04%, and sulfur under 0.05%; clad with aluminum alloy comprised of: 0.7% copper, 12% tin, 1.7% lead, 0.3% antimony, 2.5% silicon, 1% maximum total other (including iron), and remainder aluminum. Also excluded from this order are products meeting the following specifications: Carbon steel coil or strip, clad with aluminum, measuring 1.75 millimeters (0.069 inches) in thickness, 89 millimeters or 94 millimeters (3.500 inches or 3.700 inches) in width, with a low carbon steel back comprised of: Carbon under 8%, manganese under 0.4%, phosphorous under 0.04%, and sulfur under 0.05%; clad with aluminum alloy comprised of: 0.7% copper, 12% tin, 1.7% lead, 2.5% silicon, 0.3% antimony, 1% maximum total other (including iron), and remainder aluminum. *See Certain Corrosion-Resistant Carbon Steel Flat Products From Japan: Notice of Final Results of Changed Circumstances Review, and Revocation in Part of Antidumping Duty Order*, 66 FR 20967 (April 26, 2001).

Also excluded from this order are products meeting the following specifications: carbon steel coil or strip, measuring a minimum of and including 1.10mm to a maximum of and including 4.90mm in overall thickness, a minimum of and including 76.00mm to a maximum of and including 250.00mm in overall width, with a low carbon steel back comprised of: carbon under 0.10%, manganese under 0.40%, phosphorous under 0.04%, sulfur under 0.05%, and silicon under 0.05%; clad with aluminum alloy comprised of: under 2.51% copper, under 15.10% tin, and remainder aluminum as listed on the mill specification sheet. *See Certain Corrosion-Resistant Carbon Steel Flat Products From Japan: Notice of Final Results of Changed Circumstances Review, and Revocation in Part of Antidumping Duty Order,* 67 FR 7356 (February 19, 2002).

Also excluded from this order are products meeting the following specifications: (1) Diffusion annealed, non-alloy nickel-plated carbon products, with a substrate of cold-rolled battery grade sheet (''CRBG'') with both

sides of the CRBG initially electrolytically plated with pure, unalloyed nickel and subsequently annealed to create a diffusion between the nickel and iron substrate, with the nickel plated coating having a thickness of 0–5 microns per side with one side equaling at least 2 microns; and with the nickel carbon sheet having a thickness of from 0.004'' (0.10mm) to 0.030'' (0.762mm) and conforming to the following chemical specifications (%): C <= 0.08; Mn <= 0.45; P <= 0.02; S <= 0.02; Al <= 0.15; and Si <= 0.10; and the following physical specifications: Tensile = 65 KSI maximum; Yield = 32–55 KSI; Elongation = 18% minimum (aim 34%); Hardness = 85–150 Vickers; Grain Type = Equiaxed or Pancake; Grain Size (ASTM) = 7–12; Delta r value = aim less than +/-0.2; Lankford value = <== 1.2.; and (2) next generation diffusion-annealed nickel plate meeting the following specifications: (a) Nickel-graphite plated, diffusion annealed, tin-nickel plated carbon products, with a natural composition mixture of nickel and graphite electrolytically plated to the top side of diffusion annealed tin-nickel plated carbon steel strip with a cold rolled or tin mill black plate base metal conforming to chemical requirements based on AISI 1006; having both sides of the cold rolled substrate electrolytically plated with natural nickel, with the top side of the nickel plated strip electrolytically plated with tin and then annealed to create a diffusion between the nickel and tin layers in which a nickel-tin alloy is created, and an additional layer of mixture of natural nickel and graphite then electrolytically plated on the top side of the strip of the nickel-tin alloy; having a coating thickness: top side: nickel-graphite, tin-nickel layer <== 1.0 micrometers; tin layer only <== 0.05 micrometers, nickel-graphite layer only <= 0.2 micrometers, and bottom side: nickel layer <== 1.0 micrometers; (b) nickel-graphite, diffusion annealed, nickel plated carbon products, having a natural composition mixture of nickel and graphite electrolytically plated to the top side of diffusion annealed nickel plated steel strip with a cold rolled or tin mill black plate base metal conforming to chemical requirements based on AISI 1006; with both sides of the cold rolled base metal initially electrolytically plated with natural nickel, and the material then annealed to create a diffusion between the nickel and the iron substrate; with an additional layer of natural nickel-graphite then electrolytically plated on the top side of the strip of the nickel plated steel strip; with the nickel-graphite, nickel plated material sufficiently ductile and adherent to the substrate to permit forming without cracking, flaking, peeling, or any other evidence of separation; having a coating thickness: top side: nickel-graphite, tin-nickel layer <== 1.0 micrometers; nickel-graphite layer <== 0.5 micrometers; bottom side: nickel layer <== 1.0 micrometers; (c) diffusion annealed nickel-graphite plated products, which are cold-rolled or tin mill black plate base metal conforming to the chemical requirements based on AISI 1006; having the bottom side of the base metal first electrolytically plated with natural nickel, and the top side of the strip then plated with a nickel-graphite composition; with the strip then annealed to create a diffusion of the nickel-graphite and the iron substrate on the bottom side; with the nickel-graphite and nickel plated material sufficiently ductile and adherent to the substrate to permit forming without cracking, flaking, peeling, or any other evidence of separation; having coating thickness: top side: nickel-graphite layer <== 1.0 micrometers; bottom side: nickel layer <== 1.0 micrometers; (d) nickel-phosphorous plated diffusion annealed nickel plated carbon product, having a natural composition mixture of nickel and phosphorus electrolytically plated to the top side of a diffusion annealed nickel plated steel strip with a cold rolled or tin mill black plate base metal conforming to the chemical requirements based on AISI 1006; with both sides of the base metal initially electrolytically plated with natural nickel, and the material then annealed to create a diffusion of the nickel and iron substrate; another layer of the natural nickel-phosphorous then electrolytically plated on the top side of the nickel plated steel strip; with the nickel-phosphorous, nickel plated material sufficiently ductile and adherent to the substrate to permit forming without cracking, flaking, peeling or any other evidence of separation; having a coating thickness: top side: nickel-phosphorous, nickel layer <== 1.0 micrometers; nickel-phosphorous layer <== 0.1 micrometers; bottom side: nickel layer <== 1.0 micrometers; (e) diffusion annealed, tin-nickel plated products, electrolytically plated with natural nickel to the top side of a diffusion annealed tin-nickel plated cold rolled or tin mill black plate base metal conforming to the chemical requirements based on AISI 1006; with both sides of the cold rolled strip initially electrolytically plated with natural nickel, with the top side of the nickel plated strip electrolytically plated with tin and then annealed to create a diffusion between the nickel and tin layers in which a nickel-tin alloy is created, and an additional layer of natural nickel then electrolytically plated on the top side of the strip of the nickel-tin alloy; sufficiently ductile and adherent to the substrate to permit forming without cracking, flaking, peeling or any other evidence of separation; having coating thickness: top side: nickel-tin-nickel combination layer <== 1.0 micrometers; tin layer only <== 0.05 micrometers; bottom side: nickel layer <== 1.0 micrometers; and (f) tin mill products for battery containers, tin and nickel plated on a cold rolled or tin mill black plate base metal conforming to chemical requirements based on AISI 1006; having both sides of the cold rolled substrate electrolytically plated with natural nickel; then annealed to create a diffusion of the nickel and iron substrate; then an additional layer of natural tin electrolytically plated on the top side; and again annealed to create a diffusion of the tin and nickel alloys; with the tin-nickel, nickel plated material sufficiently ductile and adherent to the substrate to permit forming without cracking, flaking, peeling or any other evidence of separation; having a coating thickness: top side: nickel-tin layer <== 1 micrometer; tin layer alone <== 0.05 micrometers; bottom side: nickel layer <== 1.0 micrometer. *See Certain Corrosion-Resistant Carbon Steel Flat Products From Japan: Notice of Final Results of Changed Circumstances Review, and Revocation in Part of Antidumping Duty Order,* 67 FR 47768 (July 22, 2002).

Also excluded from this order are products meeting the following specifications: (1) Widths ranging from 10 millimeters (0.394 inches) through 100 millimeters (3.94 inches); (2) thicknesses, including coatings, ranging from 0.11 millimeters (0.004 inches) through 0.60 millimeters (0.024 inches); and (3) a coating that is from 0.003 millimeters (0.00012 inches) through 0.005 millimeters (0.000196 inches) in thickness and that is comprised of either two evenly applied layers, the first layer consisting of 99% zinc, 0.5% cobalt, and 0.5% molybdenum, followed by a layer consisting of phosphate, or three evenly applied layers, the first layer consisting of 99% zinc, 0.5% cobalt, and 0.5% molybdenum followed by a layer consisting of phosphate, and finally a layer consisting of silicate. *See Certain Corrosion-Resistant Carbon Steel Flat Products From Japan: Notice*

of Final Results of Changed Circumstances Review, and Revocation in Part of Antidumping Duty Order, 67 FR 57208 (September 9, 2002).

Also excluded from this order are products meeting the following specifications: (1) Flat-rolled products (provided for in HTSUS subheading 7210.49.00), other than of high-strength steel, known as ''ASE Iron Flash'' and either: (A) Having a base layer of zinc-based zinc-iron alloy applied by hot-dipping and a surface layer of iron-zinc alloy applied by electrolytic process, the weight of the coating and plating not over 40 percent by weight of zinc; or (B) two-layer-coated corrosion-resistant steel with a coating composed of (a) a base coating layer of zinc-based zinc-iron alloy by hot-dip galvanizing process, and (b) a surface coating layer of iron-zinc alloy by electro-galvanizing process, having an effective amount of zinc up to 40 percent by weight, and (2) corrosion resistant continuously annealed flat-rolled products, continuous cast, the foregoing with chemical composition (percent by weight): carbon not over 0.06 percent by weight, manganese 0.20 or more but not over 0.40, phosphorus not over 0.02, sulfur not over 0.023, silicon not over 0.03, aluminum 0.03 or more but not over 0.08, arsenic not over 0.02, copper not over 0.08 and nitrogen 0.003 or more but not over 0.008; and meeting the characteristics described below: (A) Products with one side coated with a nickel-iron-diffused layer which is less than 1 micrometer in thickness and the other side coated with a two-layer coating composed of a base nickel-iron-diffused coating layer and a surface coating layer of annealed and softened pure nickel, with total coating thickness for both layers of more than 2 micrometers; surface roughness (RA-microns) 0.18 or less; with scanning electron microscope (SEM) not revealing oxides greater than 1 micron; and inclusion groups or clusters shall not exceed 5 microns in length; (B) products having one side coated with a nickel-iron-diffused layer which is less than 1 micrometer in thickness and the other side coated with a four-layer coating composed of a base nickel-iron-diffused coating layer; with an inner middle coating layer of annealed and softened pure nickel, an outer middle surface coating layer of hard nickel and a topmost nickel-phosphorus-plated layer; with combined coating thickness for the four layers of more than 2 micrometers; surface roughness (RA-microns) 0.18 or less; with SEM not revealing oxides greater than 1 micron; and inclusion groups or clusters shall not exceed 5 microns in length; (C) products having one side coated with a nickel-iron-diffused layer which is less than 1 micrometer in thickness and the other side coated with a three-layer coating composed of a base nickel-iron-diffused coating layer, with a middle coating layer of annealed and softened pure nickel and a surface coating layer of hard, luster-agent-added nickel which is not heat-treated; with combined coating thickness for all three layers of more than 2 micrometers; surface roughness (RA-microns) 0.18 or less; with SEM not revealing oxides greater than 1 micron; and inclusion groups or clusters shall not exceed 5 microns in length; or (D) products having one side coated with a nickel-iron-diffused layer which is less than 1 micrometer in thickness and the other side coated with a three-layer coating composed of a base nickel-iron-diffused coating layer, with a middle coating layer of annealed and softened pure nickel and a surface coating layer of hard, pure nickel which is not heat-treated; with combined coating thickness for all three layers of more than 2 micrometers; surface roughness (RA-microns) 0.18 or less; SEM not revealing oxides greater than 1 micron; and inclusion groups or clusters shall not exceed 5 microns in length. *See Certain Corrosion-Resistant Carbon Steel Flat Products From Japan: Notice of Final Results of Changed Circumstances Review, and Revocation in Part of Antidumping Duty Order,* 68 FR 19970 (April 23, 2003).

Products and Descriptions Subject to This Review

Taiho defines the 24 separate corrosion-resistant carbon steel coil products to be excluded as meeting the following specifications:

Product 1

Products described in industry usage as of carbon steel, measuring 1.625 mm to 1.655 mm in thickness and 19.3 mm to 19.7 mm in width, consisting of carbon steel coil (SAE 1010) with a lining clad with an aluminum alloy containing by weight 10 percent or more but not more than 15 percent of tin, 1 percent or more but not more than 3 percent of lead, 0.7 percent or more but not more than 1.3 percent of copper, 1.8 percent or more but not more than 3.5 percent of silicon, 0.1 percent or more but not more than 0.7 percent of chromium and less than or equal to 1 percent of other materials, and meeting the requirements of SAE standard 788 for Bearing and Bushing Alloys.

Product 2

Products described in industry usage as of carbon steel, measuring 0.955 mm to 0.985 mm in thickness and 8.6 mm to 9.0 mm in width, consisting of carbon steel coil (SAE 1012) clad with a two-layer lining, the first layer consisting of a copper-lead alloy powder that contains by weight 9 percent or more but not more than 11 percent of tin, 9 percent or more but not more than 11 percent of lead, less than 0.05 percent phosphorus, less than 0.35 percent iron and less than or equal to 1 percent other materials, and meeting the requirements of SAE standard 797 for Bearing and Bushing Alloys, with the second layer containing by weight 13 percent or more but not more than 17 percent of carbon, 13 percent or more but not more than 17 percent of aromatic polyester, and the remainder (approx. 66–74 percent) of polytetrafluorethylene (PTFE).

Product 3

Products described in industry usage as of carbon steel, measuring 1.01 mm to 1.03 mm in thickness and 10.5 mm to 10.9 mm in width, consisting of carbon steel coil (SAE 1010) with a two-layer lining, the first layer consisting of a copper-lead alloy powder that contains by weight 9 percent or more but not more than 11 percent of tin, 9 percent or more but not more than 11 percent of lead, less than 1 percent zinc and less than or equal to 1 percent other materials, and meeting the requirements of SAE standard 797 for Bearing and Bushing Alloys, with the second layer containing by weight 45 percent or more but not more than 55 percent of lead, 3 percent or more but not more than 5 percent of molybdenum disulfide, and the remainder made up of PTFE (approximately 38 percent to 52 percent) and less than 2 percent in the aggregate of other materials.

Product 4

Products described in industry usage as of carbon steel, measuring 1.8 mm to 1.88 mm in thickness and 43.4 mm to 43.8 mm or 16.1 mm to 1.65 mm in width, consisting of carbon steel coil (SAE 1010) clad with an aluminum alloy that contains by weight 19 percent to 20 percent tin, 1 percent to 1.2 percent copper, less than 0.3 percent silicon, 0.15 percent nickel and less than 1 percent in the aggregate other materials and meeting the requirements of SAE standard 783 for Bearing and Bushing Alloys.

Product 5

Products described in industry usage as of carbon steel, measuring 0.95 mm to 0.98 mm in thickness and 19.95 mm

to 20 mm in width, consisting of carbon steel coil (SAE 1010) with a two-layer lining, the first layer consisting of a copper-lead alloy powder that contains by weight 9 percent or more but not more than 11 percent of tin, 9 percent or more but not more than 11 percent of lead, less than 1 percent of zinc and less than or equal to 1 percent in the aggregate of other materials and meeting the requirements of SAE standard 797 for Bearing and Bushing Alloys, with the second layer consisting by weight of 45 percent or more but not more than 55 percent of lead, 3 percent or more but not more than 5 percent of molybdenum disulfide and with the remainder made up of polytetrafluoroethylene (PTFE) (approximately 38 percent to 52 percent) and up to 2 percent in the aggregate of other materials.

Product 6

Products described in industry usage as of carbon steel, measuring 0.96 mm to 0.98 mm in thickness and 18.75 mm to 18.95 mm in width; base of SAE 1010 steel with a two-layer lining, the first layer consisting of copper-base alloy powder with chemical composition (percent by weight): tin 9 to 11, lead 9 to 11, phosphorus less than 0.05, ferrous group less than 0.35, and other materials less than 1 percent; meeting the requirements of SAE standard 797 for bearing and bushing alloys; the second layer consisting of lead 33 to 37 percent, aromatic polyester 28 to 32 percent, and other materials less than 2 percent with a balance of polytetrafluoroethylene (PTFE).

Product 7

Products described in industry usage as of carbon steel, measuring 1.21 mm to 1.25 mm in thickness and 19.4 mm to 19.6 mm in width; base of SAE 1012 steel with lining of copper base alloy with chemical composition (percent by weight): Tin 9 to 11, lead 9 to 11, phosphorus less than 0.05, ferrous group less than 0.35 and other materials less than 1 percent; meeting the requirements of SAE standard 797 for bearing and bushing alloys.

Product 8

Products described in industry usage as of carbon steel, measuring 0.96 mm to 0.98 mm in thickness and 21.5 mm to 21.7 mm in width; base of SAE 1010 steel with a two-layer lining, the first layer consisting of copper-base alloy powder with chemical composition (percent by weight): Tin 9 to 11, lead 9 to 11, phosphorus less than 0.05 percent, ferrous group less than 0.35 and other materials less than 1; meeting the requirements of SAE standard 797 for bearing and bushing alloys; the second layer consisting of (percent by weight) lead 33 to 37, aromatic polyester 28 to 32 and other materials less than 2 with a balance of polytetrafluoroethylene (PTFE).

Product 9

Products described in industry usage as of carbon steel, measuring 0.96 mm to 0.99 mm in thickness and 7.65 mm to 7.85 mm in width; base of SAE 1012 steel with a two-layer lining, the first layer consisting of copper-based alloy powder with chemical composition (percent by weight): Tin 9 to 11, lead 9 to 11, phosphorus less than 0.05, ferrous group less than 0.35 and other materials less than 1; meeting the requirements of SAE standard 797 for bearing and bushing alloys; the second layer consisting of (percent by weight) carbon 13 to 17 and aromatic polyester 13 to 17, with a balance of polytetrafluoroethylene (''PTFE'').

Product 10

Products described in industry usage as of carbon steel, measuring 0.955 mm to 0.985 mm in thickness and 13.6 mm to 14 mm in width; base of SAE 1012 steel with a two-layer lining, the first layer consisting of copper-based alloy powder with chemical composition (percent by weight): Tin 9 to 11, lead 9 to 11, phosphorus less than 0.05, ferrous group less than 0.35 and other materials less than 1; meeting the requirements of SAE standard 797 for bearing and bushing alloys; the second layer consisting of (percent by weight) carbon 13 to 17, aromatic polyester 13 to 17, with a balance (approximately 66 to 74) of polytetrafluoroethylene (PTFE).

Product 11

Products described in industry usage as of carbon steel, measuring 1.2 mm to 1.24 mm in thickness; 20 mm to 20.4 mm in width; consisting of carbon steel coils (SAE 1012) with a lining of sintered phosphorus bronze alloy with chemical composition (percent by weight): Tin 5.5 to 7; phosphorus 0.03 to 0.35; lead less than 1 and other non-copper materials less than 1.

Product 12

Products described in industry usage as of carbon steel, measuring 1.8 mm to 1.88 mm in thickness and 43.3 mm to 43.7 mm in width; base of SAE 1010 steel with a lining of aluminum based alloy with chemical composition (percent by weight: Tin 10 to 15, lead 1 to 3, copper 0.7 to 1.3, silicon 1.8 to 3.5, chromium 0.1 to 0.7 and other materials less than 1; meeting the requirements of SAE standard 788 for bearing and bushing alloys.

Product 13

Products described in industry usage as of carbon steel, measuring 1.8 mm to 1.88 mm in thickness and 24.2 mm to 24.6 mm in width; base of SAE 1010 steel with a lining of aluminum alloy with chemical composition (percent by weight): Tin 10 to 15, lead 1 to 3, copper 0.7 to 1.3, silicon 1.8 to 3.5, chromium 0.1 to 0.7 and other materials less than 1; meeting the requirements of SAE standard 788 for bearing and bushing alloys.

Product 14

Flat-rolled coated SAE 1009 steel in coils, with thickness not less than 0.915 mm but not over 0.965 mm, width not less than 19.75 mm or more but not over 20.35 mm; with a two-layer coating; the first layer consisting of tin 9 to 11 percent, lead 9 to 11 percent, zinc less than 1 percent, other materials (other than copper) not over 1 percent and balance copper; the second layer consisting of lead 45 to 55 percent, molybdenum disulfide (MoS2) 3 to 5 percent, other materials not over 2 percent, balance polytetrafluoroethylene (PTFE).

Product 15

Flat-rolled coated SAE 1009 steel in coils with thickness not less than 0.915 mm or more but not over 0.965 mm; width not less than 18.65 mm or more but not over 19.25 mm; with a two-layer coating; the first layer consisting of tin 9 to 11 percent, lead 9 to 11 percent, zinc less than 1 percent, other materials (other than copper) not over 1 percent, balance copper; the second layer consisting of lead 33 to 37 percent, aromatic polyester 13 to 17 percent, other materials (other than polytetrafluoroethylene (PTFE)) less than 2 percent, balance PTFE.

Product 16

Flat-rolled coated SAE 1009 steel in coils with thickness not less than 0.920 mm or more but not over 0.970 mm; width not less than 21.35 mm or more but not over 21.95 mm; with a two-layer coating; the first layer consisting of tin 9 to 11 percent, lead 9 to 11 percent, zinc less than 1 percent, other materials (other than copper) not over 1 percent, balance copper; the second layer consisting of lead 33 to 37 percent, aromatic polyester 13 to 17 percent, other materials (other than PTFE) less than 2 percent, balance PTFE.

Product 17

Flat-rolled coated SAE 1009 steel in coils with thickness not less than 1.80 mm or more but not over 1.85 mm, width not less than 14.7 mm or more but not over 15.3 mm; with a lining consisting of tin 2.5 to 4.5 percent, lead 21.0 to 25.0 percent, zinc less than 3 percent, iron less than 0.35 percent, other materials (other than copper) less than 1 percent, balance copper.

Product 18

Flat-rolled coated SAE 1009 steel in coils with thickness 1.59 mm or more but not over 1.64 mm; width 14.5 mm or more but not over 15.1 mm; with a lining consisting of tin 2.3 to 4.2 percent, lead 20 to 25 percent, iron 1.5 to 4.5 percent, phosphorus 0.2 to 2.0 percent, other materials (other than copper) less than 1 percent, balance copper.

Product 19

Flat-rolled coated SAE 1009 steel in coils with thickness not less than 1.75 mm or more but not over 1.8 mm; width not less than 18.0 mm or more but not over 18.6 mm; with a lining consisting of tin 2.3 to 4.2 percent, lead 20 to 25 percent, iron 1.5 to 4.5 percent, phosphorus 0.2 to 2.0 percent, other materials (other than copper) less than 1 percent, balance copper.

Product 20

Flat-rolled coated SAE 1009 steel in coils with thickness 1.59 mm or more but not over 1.64 mm; width 13.6 mm or more but not over14.2 mm; with a lining consisting of tin 2.3 to 4.2 percent, lead 20 to 25 percent, iron 1.5 to 4.5 percent, phosphorus 0.2 to 2.0 percent, other materials (other than copper) less than 1 percent, with a balance copper.

Product 21

Flat-rolled coated SAE 1009 steel in coils with thickness 1.59 mm or more but not over 1.64 mm; width 11.5 mm or more but not over 12.1 mm; with a lining consisting of tin 2.3 to 4.2 percent, lead 20 to 25 percent, iron 1.5 to 4.5 percent, phosphorus 0.2 to 2.0 percent, other materials (other than copper) less than 1 percent, balance copper.

Product 22

Flat-rolled coated SAE 1009 steel in coils with thickness 1.59 mm or more but not over 1.64 mm; width 11.2 mm or more but not over 11.8 mm, with a lining consisting of copper 0.7 to 1.3 percent, tin 17.5 to 22.5 percent, silicon less than 0.3 percent, nickel less than 0.15 percent, other materials less than 1 percent, balance aluminum.

Product 23

Flat-rolled coated SAE 1009 steel in coils with thickness 1.59 mm or more but not over1.64 mm; width 7.2 mm or more but not over 7.8 mm; with a lining consisting of copper 0.7 to 1.3 percent, tin 17.5 to 22.5 percent, silicon less than 0.3 percent, nickel less than 0.15 percent, other materials (other than copper) less than 1 percent, balance copper.

Product 24

Flat-rolled coated SAE 1009 steel in coils with thickness 1.72 mm or more but not over 1.77 mm; width 7.7 mm or more but not over 8.3 mm; with a lining consisting of copper 0.7 to 1.3 percent, tin 17.5 to 22.5 percent, silicon less than 0.3 percent, nickel less than 0.15 percent, other materials (other than copper) less than 1 percent, balance copper.

Initiation of Changed Circumstances Review, Preliminary Results, and Intent To Revoke Antidumping Duty Order, in Part

Pursuant to sections 751(d)(1) and 782(h)(2) of the Tariff Act of 1930, as amended (''the Act), the Department may revoke an antidumping or countervailing duty order based on a review under section 751(b) of the Act (*i.e.*, a changed circumstances review). Section 751(b)(1) of the Act requires a changed circumstances review to be conducted upon receipt of a request which shows changed circumstances sufficient to warrant a review.

Section 351.222(g) of the Department's regulations provides that the Department will conduct a changed circumstances review under 19 CFR 351.216, and may revoke an order (in whole or in part), if it determines that producers accounting for substantially all of the production of the domestic like product to which the order (or the part of the order to be revoked) pertains have expressed a lack of interest in the relief provided by the order, in whole or in part, or if changed circumstances exist sufficient to warrant revocation. Furthermore, 19 CFR 351.221(c)(3)(ii) permits the Department to combine the notice of initiation of a changed circumstances review and the notice of preliminary results in a single notice, if the Department concludes that expedited action is warranted.

In this case, the Department finds that the information submitted provides sufficient evidence of changed circumstances to warrant a review. Therefore, in accordance with sections 751(d)(1) and 782 (h)(2) of the Act, and 19 CFR 351.216 and 351.222(g), based on the information provided by Taiho, we are initiating this changed circumstances review. Furthermore, based on the apparent lack of interest in continuation of the order with respect to the specified corrosion-resistant carbon steel coil products by domestic producers, we determine that expedited action is warranted and we preliminarily find that the continued relief provided by the order with respect to the products defined above is no longer of interest to the domestic industry. Because we have concluded that expedited action is warranted, we are combining these notices of initiation and preliminary results. Therefore, we preliminarily find that the request from Taiho meets all of the criteria under 19 CFR 351.222(g) and thus, we intend to revoke the order on certain corrosion-resistant carbon steel flat products from Japan with respect to imports of the corrosion-resistant carbon steel coil products specified above.

If the final revocation, in part, occurs, we intend to instruct U.S. Customs and Border Protection (CBP) to liquidate without regard to antidumping duties all unliquidated entries of the 24 specified products not subject to final results of an administrative review. The Department will further instruct CBP to refund with interest any estimated antidumping duties collected with respect to unliquidated entries of corrosion-resistant carbon steel coil entered, or withdrawn from warehouse, for consumption on or after the publication date of the final results of this changed circumstances review, in accordance with section 778 of the Act and 19 CFR 351.222(g)(4). The current requirement for a cash deposit of estimated antidumping duties on corrosion-resistant carbon steel coil from Japan will continue unless and until we publish a final decision to revoke.

Public Comment

Interested parties may submit case briefs not later than 21 days after the date of publication of this notice. *See* 19 CFR 351.309(c)(ii). Rebuttal briefs, which must be limited to issues raised in such case briefs, may be filed not later than 26 days after the date of publication of this notice. *See* 19 CFR 351.309(d). Parties who submit arguments are requested to submit with the argument (1) a statement of the issue, (2) a brief summary of the argument, and (3) a table of authorities. Any interested party may request a hearing within 14 days of publication of this notice. *See* 19 CFR 351.310(c). Any

hearing, if requested, may be held 22 days after the date of publication of this notice, or the first working day thereafter, as practicable. Consistent with section 351.216(e) of the Department's regulations, we will issue the final results of this changed circumstance reviews not later than 270 days after the date on which this review was initiated, or within 45 days if all parties agree to our preliminary finding.

We are issuing and publishing this finding and notice in accordance with sections 751(b)(1) and 777(i)(1) of the Act and section 351.216 of the Department's regulations.

Dated: December 13, 2004.

James J. Jochum,

Assistant Secretary for Import Administration.

[FR Doc. E4–3749 Filed 12–17–04; 8:45 am]

BILLING CODE 3510–DS–P

DEPARTMENT OF COMMERCE

International Trade Administration

[A–570–868]

Folding Metal Tables and Chairs From the People's Republic of China: Final Results and Partial Rescission of First Antidumping Duty Administrative Review

AGENCY: Import Administration, International Trade Administration, Department of Commerce.

SUMMARY: On July 6, 2004, the Department of Commerce (''the Department'') published the preliminary results of the first antidumping duty administrative review of the antidumping duty order on folding metal tables and chairs from the People's Republic of China (''PRC''). This administrative review covers two exporters (*see* ''Background'' section below for further discussion). The period of review is December 3, 2001, through May 30, 2003. We gave interested parties an opportunity to comment on our preliminary results.

Based on the additional publicly available information used in these final results and the comments received from the interested parties, we have made changes in the margin calculation for Dongguan Shichang Metals Factory Co., Ltd. (''Shichang'') (*i.e.*, the respondent which fully cooperated in this review). The final weighted–average dumping margins for the reviewed firms are listed below in the section entitled ''Final Results of Review.''

EFFECTIVE DATE: December 20, 2004.

FOR FURTHER INFORMATION CONTACT: Amber Musser at (202) 482–1777 or Brian C. Smith at (202) 482–1766, AD/CVD Operations, Office 9, Import Administration, International Trade Administration, U.S. Department of Commerce, Washington, DC 20230.

SUPPLEMENTARY INFORMATION:

Background

While the Department initiated an administrative review of four companies, based on a request by the petitioner[1] and certain exporters, this administrative review now covers only two exporters: Shichang and Wok & Pan Industry, Inc. (''Wok and Pan'') (*see* ''Partial Rescission of Administrative Review'' section of this notice for further discussion).

On July 6, 2004, the Department published in the **Federal Register** the preliminary results of the first administrative review of the antidumping duty order on folding metal tables and chairs from the PRC (*see Folding Metal Tables and Chairs From the People's Republic of China: Preliminary Results of First Antidumping Duty Administrative Review*, 69 FR 40602 (July 6, 2004) (''*Preliminary Results*'')).

On July 26, 2004, the petitioner submitted publicly available information to value the factors of production in this review.

On August 17, 2004, the Department published in the **Federal Register** a notice of postponement of the final results until no later than December 13, 2004 (69 FR 51061).

Shichang submitted its case brief on September 10, 2004. The petitioner and Wok and Pan did not submit case or rebuttal briefs.

Neither the petitioner nor the respondents in this review requested a hearing.

On October 20, 2004, the Department received a request from U.S. Customs and Border Protection (''CBP'') to add Harmonized Tariff Schedule of the United States (''HTSUS'') subheadings 9403708010, 9403708020, 9403708030 to the AD/CVD module. We have updated the module and amended the scope accordingly (*see* October 20, 2004, memorandum to the file titled Request for AD/CVD Module Update with the Addition of HTSUS Numbers for Folding Metal Tables and Chairs from the People's Republic of China (A–577–868); and the ''Scope of the Order'' section of this notice).

The Department has conducted this administrative review in accordance with section 751 of the Tariff Act of 1930, as amended (''the Act'').

[1] The petitioner is Meco Corporation.

Scope of the Order

The products covered by this order consist of assembled and unassembled folding tables and folding chairs made primarily or exclusively from steel or other metal, as described below:

1) Assembled and unassembled folding tables made primarily or exclusively from steel or other metal (''folding metal tables''). Folding metal tables include square, round, rectangular, and any other shapes with legs affixed with rivets, welds, or any other type of fastener, and which are made most commonly, but not exclusively, with a hardboard top covered with vinyl or fabric. Folding metal tables have legs that mechanically fold independently of one another, and not as a set. The subject merchandise is commonly, but not exclusively, packed singly, in multiple packs of the same item, or in five piece sets consisting of four chairs and one table. Specifically excluded from the scope of folding metal tables are the following:
   a. Lawn furniture;
   b. Trays commonly referred to as ''TV trays'';
   c. Side tables;
   d. Child–sized tables;
   e. Portable counter sets consisting of rectangular tables 36'' high and matching stools; and
   f. Banquet tables. A banquet table is a rectangular table with a plastic or laminated wood table top approximately 28'' to 36'' wide by 48'' to 96'' long and with a set of folding legs at each end of the table. One set of legs is composed of two individual legs that are affixed together by one or more cross–braces using welds or fastening hardware. In contrast, folding metal tables have legs that mechanically fold independently of one another, and not as a set.
2) Assembled and unassembled folding chairs made primarily or exclusively from steel or other metal (''folding metal chairs''). Folding metal chairs include chairs with one or more cross–braces, regardless of shape or size, affixed to the front and/or rear legs with rivets, welds or any other type of fastener. Folding metal chairs include: those that are made solely of steel or other metal; those that have a back pad, a seat pad, or both a back pad and a seat pad; and those that have seats or backs made of plastic or other materials. The subject merchandise is commonly, but not exclusively, packed singly,

in multiple packs of the same item, or in five piece sets consisting of four chairs and one table. Specifically excluded from the scope of folding metal chairs are the following:

a. Folding metal chairs with a wooden back or seat, or both;
b. Lawn furniture;
c. Stools;
d. Chairs with arms; and
e. Child–sized chairs.

The subject merchandise is currently classifiable under subheadings 9401710010, 9401710030, 9401790045, 9401790050, 9403200010, 9403200030, 9403708010, 9403708020, and 9403708030 of the HTSUS. Although the HTSUS subheadings are provided for convenience and customs purposes, the Department's written description of the merchandise is dispositive.

Period of Review

The period of review (''POR'') is December 3, 2001, through May 31, 2003.

Partial Rescission of Administrative Review

We rescinded this administrative review with respect to Feili Furniture Development Co., Ltd. and Feili (Fujian) Co., Ltd. (''collectively Feili'') and New–Tec Integration Co., Ltd. (''New–Tec'') pursuant to 19 CFR 351.213(d)(1), because the petitioner withdrew its request for review and these companies did not properly file their request for review in accordance with section 751(a)(1) of the Act. *See Folding Metal Tables and Chairs from the People's Republic of China: Notice of Partial Rescission of First Antidumping Duty Administrative Review*, 68 FR 66397 (November 26, 2003) (''*Rescission Notice*'').

Facts Available - Wok and Pan

In the *Preliminary Results*, 69 FR at 40602, the Department determined that the use of adverse facts available (''AFA'') was warranted in accordance with sections 776(a) and 776(b) of the Act, with respect to Wok and Pan. Section 776(a)(2) of the Act states that the Department may use ''facts available'' if an interested party (A) withholds information that has been requested by the Department, (B) fails to provide information in the time and manner requested, (C) significantly impedes a proceeding under this title or (D) provides such information but the information cannot be verified. Furthermore, pursuant to section 776(b) of the Act, the Department may apply an adverse inference if it finds a respondent has not acted to the best of its ability in the conduct of the administrative review. Because Wok and Pan improperly filed its response to the Department's antidumping duty questionnaire and did not comply with our requests for information regarding separate rates, we determined that Wok and Pan did not cooperate to the best of its ability (*see* also 69 FR at 40602). Since the preliminary results, nothing has changed to reverse our preliminary decision regarding Wok and Pan and Wok and Pan has filed no comments on the record addressing the Department's preliminary results. Therefore, pursuant to sections 776(a) and 776(b) of the Act, we have continued to make an adverse inference with respect to Wok and Pan by assigning to its exports of the subject merchandise a rate of 70.71 percent, which is the PRC–wide rate.

Corroboration of Facts Available

Section 776(c) of the Act requires that the Department corroborate, to the extent practicable, a figure based on secondary information which it applies as AFA. To be considered corroborated, the information must be found to be both reliable and relevant, and thus determined to have probative value. For the reasons explained above, we are applying as AFA the highest rate from any segment of this proceeding, 70.71 percent, which is the current PRC–wide rate originally calculated in the less–than-fair–value (''LTFV'') investigation. (*See Notice of Final Determination of Sales at Less Than Fair Value: Folding Metal Tables and Chairs from the People's Republic of China*, 67 FR 20090, 20091 (April 24, 2002).) For the reasons stated in the *Preliminary Results*, 69 FR 40602, the Department finds this rate to be both reliable and relevant, and, therefore, to have probative value in accordance with the Statement of Administrative Action, H.R. Doc. 103–316 (''SAA''). *See* SAA at 870. No party has challenged the Department's preliminary corroboration analysis for purposes of the final results. Therefore, we have continued to assign to exports of the subject merchandise by Wok and Pan the rate of 70.71 percent.

Analysis of Comments Received

All issues raised in the case briefs are addressed in the Issues and Decision Memorandum for the Final Results of the Antidumping Duty Administrative Review on Folding Metal Tables and Chairs from the People's Republic of China December 3, 2001, through May 31, 2003, from Barbara E. Tillman, Acting Deputy Assistant Secretary for Import Administration, to James Jochum, Assistant Secretary for Import Administration, dated December 13, 1994 (''*Decision Memo*''), which is hereby adopted by this notice. A list of the issues raised, all of which are in the *Decision Memo*, is attached to this notice as an Appendix. Parties can find a complete discussion of all issues raised in the briefs and the corresponding recommendations in this public memorandum which is on file in the Central Records Unit, room B–099 of the main Department building. In addition, a complete version of the *Decision Memo* can be accessed directly on the Web at http://ia.ita.doc.gov/frn. The paper copy and electronic version of the Decision Memo are identical in content.

Changes Since the Preliminary Results

Based on the decision made by the Department in the *Notice of Amended Final Determination of Sales at Less Than Fair Value: Floor–Standing, Metal–Top Ironing Tables and Certain Parts Thereof from the People's Republic of China*, 69 FR 47868 (August 6, 2004) (''Ironing Tables''), in which the Department used the same data as in this administrative review to derive surrogate financial ratios, we have made changes to the surrogate financial ratios as discussed below. First, in the preliminary results of this review, we inadvertently failed to remove the line item ''Purchase of Traded Goods'' from the ''Value of Raw Materials Consumed'' when deriving surrogate financial ratios based on the data contained in the financial report for the Indian producer Godrej & Boyce Manufacturing Co., Ltd. (''Godrej''). Because it is the Department's practice to apply the surrogate financial ratios to the build–up of the respondent's cost of manufacture (''COM''), the denominator of these ratios must include only the manufacturing costs incurred by Godrej (*i.e.*, the Indian producer of comparable merchandise whose financial data the Department used to derive surrogate financial ratios in both *Ironing Tables* and in this administrative review) so that we are applying the financial ratios on an apples–to-apples basis. *See* section 773(c) of the Act; 19 CFR 351.408(c)(4). As the ''Purchase of Traded Goods'' does not reflect Godrej's manufacturing costs, we are excluding this value from the calculation of Godrej's COM and have recalculated the surrogate financial ratios accordingly. For a further discussion of these changes, *see* also the December 13, 2004, memorandum to the file, titled Factors Valuation for the Final Results.

In addition, we inadvertently erred in calculating the surrogate financial ratios by failing to properly value selling, general, and administrative (''SG&A'')

expenses. Specifically, we improperly valued SG&A expenses by inaccurately transcribing the data contained in the line items for ''Bad Debts/Advances Written Off'' and ''Provision for Service Contract Expenses'' as reflected in Godrej's financial report. For a further discussion of these changes, *see* also the December 13, 2004, memorandum to the file, titled Factors Valuation for the Final Results.

Final Results of Review

We determine that the following weighted–average margin percentages exist for the period December 3, 2001, through May 31, 2003:

Exporter	Final Margin (percent)
Dongguan Shichang Metals Factory Co., Ltd.	4.27
Wok & Pan Industry, Inc.	70.71
PRC–Wide Rate	70.71

Assessment Rates

The Department shall determine, and CBP shall assess, antidumping duties on all appropriate entries. The Department will issue appropriate appraisement instructions for the companies subject to these reviews directly to CBP within 15 days of publication of the final results of these reviews. For assessment purposes, we do not have the actual entered value for the respondent for which we calculated a margin because it is not the importer of record for the subject merchandise. Therefore, we have calculated individual importer- or customer–specific assessment rates by aggregating the dumping margins calculated for all of the U.S. sales examined and dividing that amount by the total quantity of the sales examined. To determine whether the duty assessment rates are *de minimis* (*i.e.*, less than 0.50 percent), in accordance with the requirement set forth in 19 CFR 351.106(c)(2), we have calculated importer- or customer–specific *ad valorem* ratios based on export prices. We will instruct CBP to assess antidumping duties on all appropriate entries covered by this review if any importer or customer–specific assessment rate calculated in the final results of this review is above *de minimis*. For entries of the subject merchandise during the POR from companies not subject to this review, we will instruct CBP to liquidate them at the cash deposit in effect at the time of entry.

Cash Deposit Requirements

The following deposit rates shall be required for merchandise subject to the order entered or withdrawn from warehouse, for consumption on or after the publication date of this final results, as provided by section 751(a)(1) and 751(a)(2)(B) of the Act: (1) The cash deposit rates for Dongguan Shichang Metals Factory Co., Ltd. and Wok & Pan will be the rates indicated above; (2) the cash deposit rate for PRC exporters for whom the Department has rescinded the review or for whom a review was not requested (*e.g.*, Feili and New–Tec) will continue to be the rate assigned in an earlier segment of the proceeding or the PRC–wide rate of 70.71 percent, whichever applicable; (3) the cash deposit rate for the PRC NME entity (including Wok & Pan) will continue to be the PRC–wide rate of 70.71 percent; and (4) the cash deposit rate for non–PRC exporters of subject merchandise from the PRC will be the rate applicable to the PRC supplier of that exporter. These deposit requirements shall remain in effect until publication of the final results of the next administrative review.

This notice also serves as a final reminder to importers of their responsibility under 19 CFR 351.402(f)(2) to file a certificate regarding the reimbursement of antidumping duties prior to liquidation of the relevant entries during this review period. Failure to comply with this requirement could result in the Secretary's presumption that reimbursement of antidumping duties occurred and the subsequent assessment of doubled antidumping duties.

This notice also serves as the only reminder to parties subject to administrative protective orders (''APO'') of their responsibility concerning the return or destruction of proprietary information disclosed under APO in accordance with 19 CFR 351.305(a). Timely written notification of the return/destruction of APO materials or conversion to judicial protective order is hereby requested. Failure to comply with the regulations and terms of an APO is a violation which is subject to sanction.

We are issuing and publishing this determination and notice in accordance with sections 751(a)(1), 751(a)(2)(B), and 777(i) of the Act and 19 CFR 351.213 and 351.214.

Dated: December 13, 2004.

James J. Jochum,

Assistant Secretary for Import Administration.

Appendix--Issues in Decision Memo

Comments

Issue 1: Use of the Actual Market Economy Prices Paid to Hong Kong Suppliers To Value Shichang's Cold Rolled Steel Input

Issue 2: Correcting Certain Errors in the Draft Instructions of Cash Deposit Rates And Liquidation to the U.S. Customs and Border Protection

[FR Doc. E4–3743 Filed 12–17–04; 8:45 am]

BILLING CODE: 3510–DS–S

DEPARTMENT OF COMMERCE

International Trade Administration

[A–570–863]

Notice of Extension of Preliminary Results of New Shipper Antidumping Duty Review: Honey From the People's Republic of China

AGENCY: Import Administration, International Trade Administration, Department of Commerce.

DATES: *Effective Dates:* December 20, 2004.

FOR FURTHER INFORMATION CONTACT: Kristina Boughton at (202) 482–8173 or Bobby Wong at (202) 482–0409; AD/CVD Operations, Office 9, Import Administration, International Trade Administration, U.S. Department of Commerce, 14th Street and Constitution Avenue, NW., Washington, DC 20230.

Background

The Department of Commerce (the Department) received a timely request from Foodworld International Club Limited (Foodworld), in accordance with 19 CFR 351.214(c), for a new shipper review of the antidumping duty order on honey from the PRC, which has a December annual anniversary month and a June semiannual anniversary month. See Notice of Amended Final Determination of Sales at Less Than Fair Value and Antidumping Duty Order; Honey from the People's Republic of China, 66 FR 63670 (December 10, 2001). On July 30, 2004, the Department found that the request for review with respect to Foodworld met all of the regulatory requirements set forth in 19 CFR 351.214(b) and initiated this new shipper antidumping duty review covering the period December 1, 2003, to March 31, 2004. See Honey From The People's Republic of China: Initiation of New Shipper Antidumping Duty Review, 69 FR 47407 (August 5, 2004).

Extension of Time Limits for Preliminary Results

Section 751(a)(2)(B)(iv) of the Tariff Act of 1930, as amended (the Act), and 19 CFR 351.214(i)(1) require the Department to issue the preliminary results of a new shipper review within

180 days after the date on which the new shipper review was initiated and final results of a review within 90 days after the date on which the preliminary results were issued. The Department may, however, extend the deadline for completion of the preliminary results of a new shipper review to 300 days if it determines that the case is extraordinarily complicated (19 CFR 351.214 (i)(2)). The Department has determined that this case is extraordinarily complicated, and the preliminary results of this new shipper review cannot be completed within the statutory time limit of 180 days. Specifically, the Department needs additional time because of the complexity of some of the issues, including valuing raw honey and several packaging inputs, as well as issuing supplemental questionnaires requesting additional information. Given the issues in this case, the Department finds that this case is extraordinarily complicated, and cannot be completed within the statutory time limit.

Accordingly, the Department is extending the time limit for the completion of the preliminary results by 90 days, from January 26, 2005, to April 26, 2005, in accordance with section 751(a)(2)(B)(iv) of the Act and 19 CFR 351.214(i)(2). The final results will, in turn, be due 90 days after the date of issuance of the preliminary results, unless extended.

Dated: December 10, 2004.

Barbara E. Tillman,

Acting Deputy Assistant Secretary for Import Administration.

[FR Doc. E4–3744 Filed 12–17–04; 8:45 am]

BILLING CODE 3510–DS–P

DEPARTMENT OF COMMERCE

International Trade Administration

[A–351–826]

Notice of Extension of Time Limit for the Final Results of Antidumping Duty Administrative Review: Small Diameter Circular Seamless Carbon and Alloy Steel Standard, Line and Pressure Pipe From Brazil

AGENCY: Import Administration, International Trade Administration, Department of Commerce.

DATES: *Effective Dates:* December 20, 2004.

FOR FURTHER INFORMATION CONTACT: Helen Kramer or Patrick Edwards, at (202) 482–0405 or (202) 482–8029, respectively, AD/CVD Operations, Office 7, Import Administration, International Trade Administration, U.S. Department of Commerce, 14th Street and Constitution Avenue, NW., Washington, DC 20230.

SUPPLEMENTARY INFORMATION:

Background

On August 1, 2003, the Department of Commerce (''the Department'') published the opportunity to request administrative review of, inter alia, small diameter circular seamless carbon and alloy steel standard, line and pressure pipe (''seamless line pipe'') from Brazil for the period August 1, 2002, through July 31, 2003. See Antidumping or Countervailing Duty Order, Finding, or Suspended Investigation; Opportunity to Request Administrative Review, 68 FR 45218 (August 1, 2003).

In accordance with 19 CFR 351.213(b)(1), on August 12, 2003, V&M do Brasil, S.A., (''VMB''), respondent in this review, requested that we conduct an administrative review of its sales of the subject merchandise. On September 30, 2003, the Department published in the **Federal Register** a notice of initiation of this antidumping duty administrative review covering the period August 1, 2002, through July 31, 2003. See Initiation of Antidumping and Countervailing Duty Administrative Reviews, 68 FR 56262 (September 30, 2003). On April 23, 2004, the Department published a notice extending the preliminary results of this review by no more than 120 days. See Notice of Extension of Preliminary Results of Antidumping Duty Administrative Review: Small Diameter Circular Seamless Carbon and Alloy Steel Standard, Line and Pressure Pipe From Brazil, 69 FR 22005 (April 23, 2004). On September 7, 2004, the Department published in the **Federal Register** its affirmative preliminary results in this administrative review. See Notice of Preliminary Results of Antidumping Duty Administrative Review, 69 FR 54125 (September 7, 2004). Pursuant to section 751(a)(3)(A) of the Tariff Act of 1930, as amended (''the Act''), the final results are currently due on January 5, 2005.

Extension of Time Limit for Final Results

Pursuant to section 751(a)(3)(A) of the Act, as amended, the Department may extend the deadline for completion of the final results of an administrative review if it determines that it is not practicable to complete the final results within the statutory time limit of 120 days from the date on which the preliminary results were published. The Department has determined that due to the complexity of the issues in this review, including (1) the evaluation of cost data, and (2) questions concerning appropriate model matching designations, it is not practicable to complete this review within the time limits mandated by section 751(a)(3)(A) of the Act and section 19 CFR 351.213(h)(1) of the Department's regulations. Therefore, the Department is extending the time limit for the completion of these final results by 30 days. Accordingly, the final results of this review will now be due on February 4, 2005.

This notice is published in accordance with section 751(a)(3)(A) of the Act and section 19 CFR 351.213(h)(2) of the Department's regulations.

Dated: December 14, 2004.

Barbara E. Tillman,

Acting Deputy Assistant Secretary for Import Administration.

[FR Doc. E4–3747 Filed 12–17–04; 8:45 am]

BILLING CODE 3510–DS–P

DEPARTMENT OF COMMERCE

International Trade Administration

[A–122–838; C–122–839]

Amendment to Antidumping and Countervailing Duty Orders on Certain Softwood Lumber Products from Canada

AGENCY: Import Administration, International Trade Administration, Department of Commerce.

EFFECTIVE DATE: December 20, 2004.

FOR FURTHER INFORMATION CONTACT: John Herrmann at (202) 482–1780, Import Administration, International Trade Administration, U.S. Department of Commerce, 14th Street and Constitution Ave., NW., Washington, DC 20230, or Dean Pinkert at (202) 482–4339, Office of the Chief Counsel for Import Administration, Office of the General Counsel, U.S. Department of Commerce, 14th Street and Constitution Ave., NW., Washington, DC 20230.

SUPPLEMENTARY INFORMATION:

Background

On May 16, 2002, the International Trade Commission (''Commission'') determined that an industry in the United States is threatened with material injury by reason of imports of softwood lumber from Canada found to be subsidized and sold in the United States at less than fair value. *Softwood Lumber from Canada*, Inv. Nos. 701–TA–414 and 731–TA–928 (Final), USITC Pub. 3509 (May 2002) (''*Final*

Injury Determinations''). On May 22, 2002, the Department published an antidumping duty order and a countervailing duty order on softwood lumber products from Canada. 67 FR 36068, 36070.

The Government of Canada subsequently requested dispute resolution at the World Trade Organization (''WTO'') to consider its claims that the *Final Injury Determinations* were inconsistent with the WTO Agreement. The matter was entitled ''United States Investigation of the International Trade Commission in Softwood Lumber from Canada,'' WT/DS277, and was reviewed by a WTO panel. In its final report, the panel found, *inter alia*, that action by the Commission in connection with its softwood lumber investigation under Title VII of the Tariff Act of 1930, as amended, was not in conformity with the obligations of the United States under the *WTO Agreement on Implementation of Article VI of the General Agreement on Tariffs and Trade 1994 and the WTO Agreement on Subsidies and Countervailing Measures*. On April 26, 2004, the Dispute Settlement Body (''DSB'') of the WTO adopted the final report of the panel.

After following the preliminary procedures required under section 129 of the URAA, by letter dated July 27, 2004, the United States Trade Representative (''USTR'') requested that the Commission issue a determination under section 129(a)(4) of the URAA that would render the Commission's action not inconsistent with the recommendations and rulings of the DSB. On November 24, 2004, the Commission issued such a determination, concluding that the U.S. softwood lumber industry is threatened with material injury by reason of imports of subsidized and dumped softwood lumber from Canada.

USTR reviewed the Commission's determination under section 129 of the URAA and consulted with the Congressional committees as provided in section 129(a)(5) of the URAA. By letter dated December 10, 2004, USTR notified the Department of the Commission's new determination and requested that it be implemented.

Amendment to Antidumping and Countervailing Duty Orders On Softwood Lumber from Canada

As described above, by letter dated December 10, 2004, USTR notified the Department that the Commission has issued a new determination pursuant to section 129 of the URAA, consistent with the recommendations and rulings of the DSB, which affirms the Commission's original determination that, under section 705(b)(1)(A)(ii) of the Tariff Act of 1930, as amended, the industry in the United States producing softwood lumber products is threatened with material injury by reason of imports of the subject merchandise from Canada. Also pursuant to section 129 of the URAA, the Trade Representative requested that the Department implement the Commission's new determination.

Consequently, the Department hereby amends the antidumping and countervailing duty orders on softwood lumber products from Canada to reflect the issuance and implementation of the above–referenced determination under section 129 of the URAA.

Dated: December 13, 2004.

James J. Jochum,

Assistant Secretary for Import Administration.

[FR Doc. E4–3741 Filed 12–20–04; 8:45 am]

BILLING CODE: 3510–DS–S

DEPARTMENT OF COMMERCE

International Trade Administration

[C–122–839]

Notice of Final Results of Countervailing Duty Administrative Review and Rescission of Certain Company-Specific Reviews: Certain Softwood Lumber Products From Canada

AGENCY: Import Administration, International Trade Administration, Department of Commerce.

SUMMARY: On June 14, 2004, the Department of Commerce (the Department) published in the **Federal Register** its preliminary results of administrative review of the countervailing duty order on certain softwood lumber products (subject merchandise) from Canada for the period May 22, 2002, through March 31, 2003 (*see* Notice of Preliminary Results of Countervailing Duty Administrative Review: Certain Softwood Lumber Products From Canada, 69 FR 33204 (June 14, 2004) (Preliminary Results)). The Department has now completed this administrative review in accordance with section 751(a) of the Tariff Act of 1930, as amended (the Act).

Based on information received since the Preliminary Results and our analysis of comments received, the Department has revised the net subsidy rate. For further discussion of the changes we have made since the Preliminary Results, *see* the ''Issues and Decision Memorandum from Barbara E. Tillman, Acting Deputy Assistant Secretary for Import Administration, to James J. Jochum, Assistant Secretary for Import Administration, concerning the ''Final Results of Countervailing Duty Administrative Review: Certain Softwood Lumber Products from Canada'' (Decision Memorandum) dated December 13, 2004. The final net subsidy rate is listed below in the section entitled ''Final Results of Review.''

DATES: *Effective Date:* December 20, 2004.

FOR FURTHER INFORMATION CONTACT: Kristen Johnson (202) 482–4793, or James Terpstra (202) 482–3965, AD/CVD Operations, Office 3, Import Administration, International Trade Administration, U.S. Department of Commerce, Room 4012, 14th Street and Constitution Avenue, NW., Washington, DC 20230.

SUPPLEMENTARY INFORMATION:

Background

On June 14, 2004, the Department published in the **Federal Register** the Preliminary Results. We invited interested parties to comment on the results. Since the preliminary results, the following events have occurred.

In the Preliminary Results we stated that, in order to provide parties an opportunity to comment, the Department intended to issue a decision memorandum related to subsidy rate calculations involving the companies selected for individual review prior to issuing the final results of this review (69 FR at 33206). On October 8, 2004, we issued a memorandum detailing our analysis of Fontaine Inc. (formerly J.A. Fontaine), Les Produits Forestiers Dube Inc., Scierie West Brome Inc., and Scierie Lapointe & Roy Ltee. and announcing our intent to rescind the reviews with respect to Bear Lumber Ltd., Bois Daaquam Inc., Cambie Cedar Products Ltd., Midway Lumber Mills Ltd., Nickel Lake Lumber, Twin Rivers Cedar Products Ltd., and Uphill Wood Supply Inc.

In the Preliminary Results we stated that we had not yet received any responses to our request for sales data for the period of review (POR) from the companies that were excluded from the countervailing duty order as a result of the exclusion and expedited review process (69 FR at 33207). On June 28, 2004, we received a response from only one of the companies. *See* J.D. Irving, Limited (J.D. Irving) June 28, 2004, submission.

In connection with the Human Resources & Skills Development Worker Assistance Programs administered by

the Government of Canada (GOC), in the Preliminary Results we stated that we intended to seek further information to confirm the GOC's claim regarding the retraining obligations that softwood lumber producers have assumed (69 FR at 33232). On August 16, 2004, we received responses to our supplemental questionnaire.

On August 13, 2004, the Department granted the petitioner's [1] request to allow interested parties to submit new information relevant to the use of data from the provinces of Nova Scotia and New Brunswick and the comparability of this data to similar data in other Canadian provinces subject to this review. We received such new information on August 31 and September 10, 2004.

As provided in section 782(i) of the Act, we conducted verification of the information regarding New Brunswick and Nova Scotia from September 13 to September 16, 2004, and from September 21 to September 24, 2004. We used standard verification procedures, including meeting with government officials and examining relevant records and original source documents. Our verification results are outlined in detail in the public versions of the verification reports, which are on file in the Central Records Unit (CRU), room B–099 of the main Department building.

On September 20, 2004, we issued a supplemental questionnaire to the GOC and the government of British Columbia (GBC) regarding B.C.'s Private Forest Land Property Tax Program. We received a response on October 5, 2004, and, on October 22, 2004, we issued a memorandum detailing our analysis of this program.

On October 28, 2004, we rejected untimely filed, new factual information submitted by petitioners on October 22, 2004, and by the GOC on October 26, 2004.

We received case briefs and rebuttal briefs from parties. A public hearing was held on November 4, 2004.

Scope of the Order

The products covered by this order are softwood lumber, flooring and siding (softwood lumber products). Softwood lumber products include all products classified under subheadings 4407.1000, 4409.1010, 4409.1090, and 4409.1020, respectively, of the Harmonized Tariff Schedule of the United States (HTSUS), and any softwood lumber, flooring and siding described below. These softwood lumber products include:

(1) Coniferous wood, sawn or chipped lengthwise, sliced or peeled, whether or not planed, sanded or finger-jointed, of a thickness exceeding six millimeters;

(2) Coniferous wood siding (including strips and friezes for parquet flooring, not assembled) continuously shaped (tongued, grooved, rabbeted, chamfered, v-jointed, beaded, molded, rounded or the like) along any of its edges or faces, whether or not planed, sanded or finger-jointed;

(3) Other coniferous wood (including strips and friezes for parquet flooring, not assembled) continuously shaped (tongued, grooved, rabbeted, chamfered, v-jointed, beaded, molded, rounded or the like) along any of its edges or faces (other than wood moldings and wood dowel rods) whether or not planed, sanded or finger-jointed; and

(4) Coniferous wood flooring (including strips and friezes for parquet flooring, not assembled) continuously shaped (tongued, grooved, rabbeted, chamfered, v-jointed, beaded, molded, rounded or the like) along any of its edges or faces, whether or not planed, sanded or finger-jointed.

Although the HTSUS subheadings are provided for convenience and customs purposes, the written description of the merchandise subject to this order is dispositive.

As specifically stated in the Issues and Decision Memorandum accompanying the Notice of Final Determination of Sales at Less Than Fair Value: Certain Softwood Lumber Products from Canada, 67 FR 15539 (April 2, 2002) (see comment 53, item D, page 116, and comment 57, item B–7, page 126), available at *http://www.ia.ita.doc.gov/frn,* drilled and notched lumber and angle cut lumber are covered by the scope of this order.

The following softwood lumber products are excluded from the scope of this order provided they meet the specified requirements detailed below:

(1) *Stringers* (pallet components used for runners): If they have at least two notches on the side, positioned at equal distance from the center, to properly accommodate forklift blades, properly classified under HTSUS 4421.90.98.40.

(2) *Box-spring frame kits:* if they contain the following wooden pieces—two side rails, two end (or top) rails and varying numbers of slats. The side rails and the end rails should be radius-cut at both ends. The kits should be individually packaged, they should contain the exact number of wooden components needed to make a particular box spring frame, with no further processing required. None of the components exceeds 1″ in actual thickness or 83″ in length.

(3) *Radius-cut box-spring-frame components,* not exceeding 1″ in actual thickness or 83″ in length, ready for assembly without further processing. The radius cuts must be present on both ends of the boards and must be substantial cuts so as to completely round one corner.

(4) *Fence pickets* requiring no further processing and properly classified under HTSUS 4421.90.70, 1″ or less in actual thickness, up to 8″ wide, 6′ or less in length, and have finials or decorative cuttings that clearly identify them as fence pickets. In the case of dog-eared fence pickets, the corners of the boards should be cut off so as to remove pieces of wood in the shape of isosceles right angle triangles with sides measuring 3/4 inch or more.

(5) *U.S. origin lumber* shipped to Canada for minor processing and imported into the United States, is excluded from the scope of this order if the following conditions are met: (1) The processing occurring in Canada is limited to kiln-drying, planing to create smooth-to-size board, and sanding, and (2) if the importer establishes to the satisfaction of U.S. Customs and Border Protection (CBP) that the lumber is of U.S. origin.

(6) *Softwood lumber products contained in single family home packages or kits,*[2] regardless of tariff classification, are excluded from the scope of this order if the importer certifies to items 6 A, B, C, D, and requirement 6 E is met:

A. The imported home package or kit constitutes a full package of the number of wooden pieces specified in the plan, design or blueprint necessary to produce a home of at least 700 square feet produced to a specified plan, design or blueprint;

B. The package or kit must contain all necessary internal and external doors and windows, nails, screws, glue, sub floor, sheathing, beams, posts, connectors, and if included in the purchase contract, decking, trim, drywall and roof shingles specified in the plan, design or blueprint.

C. Prior to importation, the package or kit must be sold to a retailer of complete home packages or kits pursuant to a valid purchase contract referencing the particular home design plan or

[1] The petitioner is the Executive Committee of the Coalition for Fair Lumber Imports, an *ad hov* coalition of softwood lumber producers.

[2] To ensure administrability, we clarified the language of exclusion number 6 to require an importer certification and to permit single or multiple entries on multiple days as well as instructing importers to retain and make available for inspection specific documentation in support of each entry.

blueprint, and signed by a customer not affiliated with the importer;

D. Softwood lumber products entered as part of a single family home package or kit, whether in a single entry or multiple entries on multiple days, will be used solely for the construction of the single family home specified by the home design matching the entry.

E. For each entry, the following documentation must be retained by the importer and made available to CBP upon request:

i. A copy of the appropriate home design, plan, or blueprint matching the entry;

ii. A purchase contract from a retailer of home kits or packages signed by a customer not affiliated with the importer;

iii. A listing of inventory of all parts of the package or kit being entered that conforms to the home design package being entered;

iv. In the case of multiple shipments on the same contract, all items listed in E(iii) which are included in the present shipment shall be identified as well.

Lumber products that CBP may classify as stringers, radius cut box-spring-frame components, and fence pickets, not conforming to the above requirements, as well as truss components, pallet components, and door and window frame parts, are covered under the scope of this order and may be classified under HTSUS subheadings 4418.90.45.90, 4421.90.70.40, and 4421.90.97.40.

Finally, as clarified throughout the course of the investigation, the following products, previously identified as Group A, remain outside the scope of this order. They are:

1. Trusses and truss kits, properly classified under HTSUS 4418.90;
2. I-joist beams;
3. Assembled box spring frames;
4. Pallets and pallet kits, properly classified under HTSUS 4415.20;
5. Garage doors;
6. Edge-glued wood, properly classified under HTSUS 4421.90.98.40;
7. Properly classified complete door frames;
8. Properly classified complete window frames;
9. Properly classified furniture.

In addition, this scope language was further clarified to specify that all softwood lumber products entered from Canada claiming non-subject status based on U.S. country of origin will be treated as non-subject U.S.-origin merchandise under the countervailing duty order, provided that these softwood lumber products meet the following condition: Upon entry, the importer, exporter, Canadian processor and/or original U.S. producer establish to CBP's satisfaction that the softwood lumber entered and documented as U.S.-origin softwood lumber was first produced in the United States as a lumber product satisfying the physical parameters of the softwood lumber scope.[3] The presumption of non-subject status can, however, be rebutted by evidence demonstrating that the merchandise was substantially transformed in Canada.

Analysis of Comments Received

All issues raised in the case and rebuttal briefs by parties to this review are addressed in the Decision Memorandum, which is hereby adopted by this notice. A list of issues which parties have raised and to which we have responded, all of which are in the Decision Memorandum, is attached to this notice as Appendix I. Parties can find a complete discussion of all issues raised in this review and the corresponding recommendations in this public memorandum which is on file in the CRU. In addition, a complete version of the Decision Memorandum can be accessed directly on the World Wide Web at *http://ia.ita.doc.gov/frn.* The paper copy and electronic version of the Decision Memorandum are identical in content.

Final Results of Review

In accordance with section 777(A)(e)(2)(B) of the Act, we have calculated a single country-wide *ad valorem* subsidy rate of 17.18 percent to be applied to all producers and exporters of the subject merchandise from Canada, other than those producers that have been excluded from the order and those producers receiving an individual rate in this review.

We have determined that Fontaine Inc., Les Produits Forestiers Dube Inc., Scierie West Brome Inc., and Scierie Lapointe & Roy Ltee. each received zero or *de minimis* net subsidies during the POR. We have also determined to rescind the reviews with respect to Bear Lumber Ltd., Bois Daaquam Inc., Cambie Cedar Products Ltd., Midway Lumber Mills Ltd., Nickel Lake Lumber, Twin Rivers Cedar Products Ltd., and Uphill Wood Supply Inc.

The Department has previously excluded the following companies from this order:

Armand Duhamel et fils Inc.
Bardeaux et Cedres
Beaubois Coaticook Inc.
Busque & Laflamme Inc.
Carrier & Begin Inc.
Clermond Hamel
J.D. Irving, Ltd.
Les Produits Forestiers D.G., Ltee
Marcel Lauzon Inc.
Mobilier Rustique
Paul Vallee Inc.
Rene Bernard, Inc.
Roland Boulanger & Cite. Ltee
Scierie Alexandre Lemay
Scierie La Patrie, Inc.
Scierie Tech, Inc.
Wilfrid Paquet et fils, Ltee
B. Luken Logging Ltd.
Frontier Lumber
Sault Forest Products Ltd.
Interbois Inc.
Les Moulures Jacomau
Richard Lutes Cedar Inc.
Boccam Inc.
Indian River Lumber
Sechoirs de Beauce Inc.

See Notice of Amended Final Affirmative Countervailing Duty Determination and Notice of Countervailing Duty Order: Certain Softwood Lumber Products from Canada, 67 FR 36068 (May 22, 2002), as corrected (67 FR 37775, May 30, 2002), Final Results of Countervailing Duty Expedited Reviews: Certain Softwood Lumber Products from Canada, 68 FR 24436 (May 7, 2003), and Final Results, Reinstatement, Partial Rescission of Countervailing Duty Expedited Reviews, and Company Exclusions: Certain Softwood Lumber Products From Canada, 69 FR 10982 (March 9, 2004).

Finally, certain softwood lumber products from the Maritime Provinces are exempt from this countervailing duty order. This exemption, however, does not apply to softwood lumber products produced in the Maritime Provinces from Crown timber harvested in any other province.

We will instruct CBP, within 15 days of publication of the final results of this review, to liquidate shipments of certain softwood lumber products from Canada entered, or withdrawn from warehouse, for consumption from May 22, 2002, through March 31, 2003, at the above indicated company-specific and aggregate *ad valorem* net subsidy rates. We will direct CBP to exempt from the application of the order only entries of softwood lumber products from Canada which are accompanied by an original Certificate of Origin issued by the Maritime Lumber Bureau (MLB), and those of the excluded companies listed above.

In addition, we will instruct CBP to collect cash deposits of estimated countervailing duties in the amounts indicated above of the f.o.b. price on all shipments of the subject merchandise entered, or withdrawn from warehouse,

[3] *See* the scope clarification message (#30304202), dated February 3, 2003, to CBP, regarding treatment of U.S. origin lumber on file in the CRU.

for consumption on or after the date of publication of these final results of review.

Return or Destruction of Proprietary Information

This notice serves as a reminder to parties subject to administrative protective order (APO) of their responsibility concerning the disposition of proprietary information disclosed under APO in accordance with 19 CFR 351.305(a)(3). Timely written notification of return/destruction of APO material or conversion to judicial protective order is hereby requested. Failure to comply is a violation of the APO.

This administrative review and this notice are issued and published in accordance with sections 751(a)(1) and 777(i) of the Act.

Dated: December 13, 2004.

James J. Jochum,

Assistant Secretary for Import Administration.

Appendix I

Summary

Methodology And Background Information

I. *Company-Specific Reviews*
II. *Subsidies Valuation Information*
A. *Aggregation and Company-Specific Rates*
B. *Allocation Period*
C. *Recurring and Non-Recurring Benefits*
D. *Benchmarks for Loans and Discount Rate*
E. *Aggregate Subsidy Rate Calculation*
1. Provincial Crown Stumpage Programs
2. Other Programs
3. Excluded Companies
F. Pass-through
III. *Denominator*

Analysis Of Programs

I. *Provincial Stumpage Programs Determined to Confer Subsidies*1
A. *Financial Contribution and Specificity*
B. *Benefit—Benchmark*
Private Provincial Market Prices
Private Stumpage Prices in New Brunswick and Nova Scotia
Benchmark Prices for B.C.
1. *The Maritimes Benchmarks Are Not the Most Appropriate for B.C.*
2. *World Market Prices*
3. *B.C. Log Prices Are Not An Appropriate Benchmark*
4. *U.S. Log Prices are a More Appropriate Benchmark*
5. *Comparative Advantage*
C. *Benefit—Calculations*
Adjustments
Calculation of the Benefit
Country-Wide Rate for Stumpage

Other Non-Stumpage Programs

Other Programs Determined To Confer Subsidies

Programs Administered by the Government of Canada

1. *Federal Economic Development Initiative in Northern Ontario (FEDNOR)*
2. *Western Economic Diversification Program Grants and Conditionally Repayable Contributions (WDP)*
3. *Natural Resources Canada (NRCAN) Softwood Marketing Subsidies*
4. *Payments to the Canadian Lumber Trade Alliance (CLTA) & Independent Lumber Remanufacturers Association (ILRA)*

Programs Administered by the Province of British Columbia

1. *Forest Renewal British Columbia (FRBC)*
2. *Forestry Innovation Investment Program (FIIP)*
3. *British Columbia Private Forest Property Tax Program*

Programs Administered by the Province of Quebec

1. *Private Forest Development Program*

Programs Determined Not To Be Countervailable

Program Administered by the Government of Canada

1. *Human Resources & Skills Development Worker Assistance Programs (HRSD)*
2. *Litigation-Related Payments to Forest Products Association of Canada (FPAC)*

Program Administered by the Province of Alberta

1. *Timber Damage Compensation for Forest Management Agreement (FMA) Holders*

Programs Determined Not to Confer A Benefit During the POR

Program Administered by the Province of Manitoba

1. *Timber Damage Compensation for Timber Licensees*

Programs Administered by the Province of Quebec

1. *Assistance from the Societe de Recuperation d'Exploitation et de Developpement Forestiers du Quebec (Rexfor)*
2. *Assistance under Article 28 of Investissement Quebec*

Other Programs

Program Administered by the Province of British Columbia

1. *''Allowances'' for Harvesting Beetle-Infested Timber*

Program Administered by the Province of British Columbia

2. *Land Base Investment Program (LBIP)*

Programs Determined Not to Be Used

Program Administered by the Government of Canada

1. *Canadian Forest Service Industry, Trade & Economics Program (CFS–ITE)*

Total Ad Valorem Rate

Analysis of Comments

A. Company-Specific Review Issues

Comment 1: Legal and International Obligations to Conduct Company Reviews
Comment 2: Rescission of Company-Specific Reviews Was Unlawful and Unreasonable
Comment 3: Burden and Difficulty of Company-Specific Reviews Was Exaggerated
Comment 4: Review of Bois Daaquam Inc.
Comment 5: Reconsideration of Midway Lumber's Company-Specific Review is Not Supported
Comment 6: Zero/De Minimis Rate Companies Should be Verified
Comment 7: Decision Not to Review Leggett & Platt was Based on a Factual Error
Comment 8: Quebec Border Mills' Wood Sourcing is Unique and Warrants Individual Reviews
Comment 9: Individual Calculations for Blanchet and Maibec

B. Subsidies Valuation Issues

1. Numerator Issues
a. *Pass-through*
Comment 10: Record Evidence Demonstrates the Existence of Arm's-Length Purchases of Logs
Comment 11: Definition of a Log Sale Transaction
b. *Alberta*
Comment 12: Timber Going to Non-Sawmills
c. *Quebec*
Comment 13: Numerator of the Subsidy Benefit Calculation Should be Recalculated
Comment 14: Whether the Calculation of Numerator is Sufficient to Produce the Volume in the Denominator
d. *Excluded Companies*
Comment 15: Benefits to Excluded Companies Should be Deducted in the Calculations
2. Denominator Issues
a. *Attribution of Stumpage Benefit*
Comment 16: Attribution of Stumpage Subsidies to All Products from Subsidized Logs
b. *Use of Adverse Facts Available for Manitoba and Saskatchewan*
Comment 17: Use of Adverse Facts Available to Derive Lumber and Co-Product Shipment Data

C. Provincial Stumpage Program Issues

1. Specificity
Comment 18: Stumpage Program is Not Specific
2. Benchmark: In-Province Stumpage Prices
a. *Alberta*
Comment 19: Timber Damage Assessment Data as a Provincial Benchmark
b. *Ontario*
Comment 20: DGM Survey Prices are Useable Private Prices under the First Tier of the Benchmark Hierarchy
Comment 21: Whether Ontario Crown Supply is Inelastic and Whether Marginal Demand is Met by the Private Market
c. *Quebec*
Comment 22: Effect That Mills Sourcing Exclusively from the Private Forest Have on

the Price of Standing Timber in Quebec's Private Forest

Comment 23: Effect That Mills Sourcing from Both the Public and Private Forests Have on the Price of Standing Timber in Quebec's Private Forest

Comment 24: Whether Quebec's Public Forests Are Residual to Private Forests

Comment 25: Annual Allowable Cut in Quebec is Binding

Comment 26: Incentive Structure of Dual-Source Mills

Comment 27: Relevance of Collusion Concerning the Analysis of Quebec's Private Forest

Comment 28: Barriers to Entry in Quebec's Private Forests

Comment 29: Relevance of Log Exports Concerning the Analysis of Quebec's Private Forest

Comment 30: Whether Quebec's Forest Marketing Boards and Syndicates Mitigates the Market Power Held by Tenure Holding Mills

Comment 31: The Significance of Log Imports Into Quebec

Comment 32: Whether Anecdotal Evidence Cited by Department is Relevant

Comment 33: Whether the Department Acted As An Impartial Fact Finder

3. Maritimes Stumpage Prices

a. *Distortion*

Comment 34: Whether the Market Conditions for Private Standing Prices in New Brunswick and Nova Scotia Are Distinct from Those in Quebec

b. *Country vs. Province*

Comment 35: Maritimes ''In-country'' Prices: Tier One of Benchmark Hierarchy

Comment 36: Quebec Province-Specific Rate

c. *Non-representative*

Comment 37: Use of AGFOR Reports of Maritimes Stumpage Prices

Comment 38: Maritimes Do Not Reflect Prevailing Market Conditions

d. *Adjustments*

Comment 39: Benchmark Adjustments

Adjustments for British Columbia

Adjustments for Alberta

Adjustments for Quebec

Adjustments for Manitoba

Adjustments for Saskatchewan

Adjustments to Ontario

e. *Calculation of Maritimes Prices*

Comment 40: Errors Using Maritimes Benchmark

f. *Ministerial Errors*

Comment 41: Errors Concerning Quebec's Forestry Fund Adjustment and Non-credited Silviculture Costs

Comment 42: Volume and Value Data for B.C. Softwood Logs

g. *East-West Adjustment*

1. *Alberta*

Comment 43: Timber in Western Alberta: East-West Adjustment for Quality

4. *Tier Three Benchmarks*

Comment 44: Market Principles under Third-tier Category as Benchmark

D. Other Program Issues

Comment 45: Federal Economic Development Initiative in Northern Ontario (FEDNOR)

Comment 46: Western Economic Diversification Program Grants and Conditionally Repayable Contributions (WDP)

Comment 47: Natural Resources Canada (NRCAN) Softwood Lumber Marketing Research Subsidies Under the Value-to-Wood Program (VWP) and the National Research Institutes Initiative (NRII)

Comment 48: Payments to the Canadian Lumber Trade Alliance (CLTA) & Independent Lumber Remanufacturers Association (ILRA)

Comment 49: Denominator Used to Calculate the Forest Renewal B.C. Subsidy Rate

Comment 50: Whether the Land Base Investment Program is (LBIP) Countervailable

Comment 51: Whether Forestry Innovation Investment (''FII'') Expenditures Are Countervailable

Comment 52: Denominator Used to Calculate the FII Subsidies

Comment 53: Whether the Private Forest Development Program (PFDP) Is Countervailable

Comment 54: Worker Assistance Programs Administered by Human Resources & Skills Development (HRSD)

Comment 55: Litigation-Related Payments to Forest Products Association of Canada (FPAC)

Comment 56: Whether Timber Damage Assessments (TDA) Confer a Countervailable Benefit

Comment 57: Affirm Preliminary Findings for Timber Damage Compensation for Timber Licensees

Comment 58: Whether Assistance Under Article 28 of Investissement Quebec is a Countervailable Program

Comment 59: Canadian Forest Service Industry, Trade & Economics Program (IT&E)

Comment 60: British Columbia Private Forest Land Tax Program

Comment 61: Tenureholders Underreporting Volumes of Timber Harvested in Quebec

Comment 62: Whether British Columbia's Skeena Cellulose and NWBC Timber & Pulp Ltd Received Any Benefits During the POR

[FR Doc. E4–3748 Filed 12–17–04; 8:45 am]

BILLING CODE 3510–DS–P

DEPARTMENT OF COMMERCE

International Trade Administration

[A–122–838]

Notice of Final Results of Antidumping Duty Administrative Review and Notice of Final Results of Antidumping Duty Changed Circumstances Review: Certain Softwood Lumber Products From Canada

AGENCY: Import Administration, International Trade Administration, Department of Commerce.

SUMMARY: On June 14, 2004, the Department of Commerce (the Department) published the preliminary results of its first administrative review of the antidumping duty order on certain softwood lumber from Canada. The review covers the following producers of subject merchandise: Abitibi-Consolidated Inc. (Abitibi), Buchanan Lumber Sales, Inc. (Buchanan), Canfor Corporation (Canfor), Slocan Forest Products Ltd. (Slocan), Tembec Inc. (Tembec), Tolko Industries, Inc. (Tolko), West Fraser Timber Co. Ltd. (West Fraser), and Weyerhaeuser Company (Weyerhaeuser). In addition, based on the preliminary results for these respondents selected for individual review, we have also determined a weighted-average margin for those companies that requested, but were not selected for, individual review. The period of review (POR) is May 22, 2002, through April 30, 2003. We have noted the changes made since the preliminary results below in the ''Changes Since the Preliminary Results'' section. The final results are listed below in the ''Final Results of Review'' section.

The Department also initiated a changed circumstances review on the merger of two companies, Canfor and Slocan. On September 14, 2004, the Department published the preliminary results of the antidumping duty changed circumstances review. These final results did not differ from the preliminary results.

DATES: *Effective Date:* December 20, 2004.

FOR FURTHER INFORMATION CONTACT: Constance Handley or James Kemp, at (202) 482–0631 or (202) 482–5346, respectively; AD/CVD Operations, Office 1, Import Administration, International Trade Administration, U.S. Department of Commerce, 14th Street & Constitution Avenue, NW., Washington, DC 20230.

SUPPLEMENTARY INFORMATION:

Background

On June 14, 2004, the Department published in the **Federal Register** the preliminary results of the first administrative review of the antidumping duty order on certain softwood lumber from Canada. *See Notice of Preliminary Results of Antidumping Duty Administrative Review: Certain Softwood Lumber from Canada*, 69 FR 33235 (June 14, 2004) (*Preliminary Results*). On August 5, 2004, an amended notice to the initiation and preliminary results was published. *See Notice of Amended Initiation and Amended Preliminary Results of Antidumping Duty Administrative Review: Certain Softwood Lumber Products From Canada*, 69 FR 47413 (August 5, 2004). The notice initiated a review of 22 additional companies and applied to

these companies the review-specific average margin for respondents not selected for an individual review as calculated in the *Preliminary Results.*

The Coalition for Fair Lumber Imports Executive Committee, the petitioner [1] in this case, submitted a request that the Department initiate a changed circumstances review of the antidumping duty order on certain softwood lumber products from Canada. On May 11, 2004, the Department published a notice of initiation of changed circumstances review to determine the appropriate cash deposit rate for Canfor, which merged with Slocan as of April 1, 2004. *See Initiation of Antidumping Duty Administrative Changed Circumstances Review: Certain Softwood Lumber Products From Canada,* 69 FR 26072 (May 11, 2004). The Department published the preliminary results of the changed circumstances review on September 14, 2004. *See Notice of Preliminary Results of Antidumping Duty Administrative Changed Circumstances Review: Certain Softwood Lumber Products From Canada,* 69 FR 55406 (September 14, 2004) (*Changed Circumstances Preliminary Results*). In the *Changed Circumstances Preliminary Results,* the Department determined that post-merger Canfor should be assigned a cash deposit rate reflecting a weighted-average of Canfor's and Slocan's respective cash deposit rates prior to the merger, and that the final results of the changed circumstances review would be aligned with the final results of the antidumping administrative review for the purposes of establishing the final cash deposit rate for post-merger Canfor.

We invited parties to comment on the *Preliminary Results* and the *Changed Circumstances Preliminary Results.* On August 20, 2004, we received case briefs from the above-mentioned respondents, the petitioner, and other interested parties.[2] The parties submitted rebuttal briefs on September 8, 2004. A public hearing was requested and held on October 6, 2004. On October 14, 2004, we also received comments on the *Changed Circumstances.*

[1] The petitioner in this case is the Coalition for Fair Lumber Imports Executive Committee. We note that during the review, submissions have been made interchangeably by the petitioner itself and by the Coalition for Fair Lumber Imports, a domestic interested party. For ease of reference, we will use the term ''petitioner'' to refer to submissions by either, although we recognize that the Coalition for Fair Lumber Imports is not the actual petitioner.

[2] Case briefs were received from the British Columbia Trade Council (BCLTC) and its Constituent Associations, Lignum Ltd. (Lignum), and the Maritime Lumber Bureau, and lumber producers located in those provinces (the Maritimes).

Preliminary Results

Scope of the Order

The products covered by this order are softwood lumber, flooring and siding (softwood lumber products). Softwood lumber products include all products classified under headings 4407.1000, 4409.1010, 4409.1090, and 4409.1020, respectively, of the Harmonized Tariff Schedule of the United States (HTSUS), and any softwood lumber, flooring and siding described below. These softwood lumber products include:

(1) Coniferous wood, sawn or chipped lengthwise, sliced or peeled, whether or not planed, sanded or finger-jointed, of a thickness exceeding six millimeters;

(2) Coniferous wood siding (including strips and friezes for parquet flooring, not assembled) continuously shaped (tongued, grooved, rabbeted, chamfered, v-jointed, beaded, molded, rounded or the like) along any of its edges or faces, whether or not planed, sanded or finger-jointed;

(3) Other coniferous wood (including strips and friezes for parquet flooring, not assembled) continuously shaped (tongued, grooved, rabbeted, chamfered, v-jointed, beaded, molded, rounded or the like) along any of its edges or faces (other than wood moldings and wood dowel rods) whether or not planed, sanded or finger-jointed; and

(4) Coniferous wood flooring (including strips and friezes for parquet flooring, not assembled) continuously shaped (tongued, grooved, rabbeted, chamfered, v-jointed, beaded, molded, rounded or the like) along any of its edges or faces, whether or not planed, sanded or finger-jointed.

Although the HTSUS subheadings are provided for convenience and customs purposes, the written description of the merchandise under investigation is dispositive. Preliminary scope exclusions and clarifications were published in three separate **Federal Register** notices.

Softwood lumber products excluded from the scope:

- Trusses and truss kits, properly classified under HTSUS 4418.90.
- I-joist beams.
- Assembled box spring frames.
- Pallets and pallet kits, properly classified under HTSUS 4415.20.
- Garage doors.
- Edge-glued wood, properly classified under HTSUS 4421.90.97.40 (formerly HTSUS 4421.90.98.40).
- Properly classified complete door frames.
- Properly classified complete window frames.
- Properly classified furniture.

Softwood lumber products excluded from the scope only if they meet certain requirements:

- *Stringers* (pallet components used for runners): if they have at least two notches on the side, positioned at equal distance from the center, to properly accommodate forklift blades, properly classified under HTSUS 4421.90.97.40 (formerly HTSUS 4421.90.98.40).
- *Box-spring frame kits:* if they contain the following wooden pieces—two side rails, two end (or top) rails and varying numbers of slats. The side rails and the end rails should be radius-cut at both ends. The kits should be individually packaged, they should contain the exact number of wooden components needed to make a particular box spring frame, with no further processing required. None of the components exceeds 1″ in actual thickness or 83″ in length.
- *Radius-cut box-spring-frame components,* not exceeding 1″ in actual thickness or 83″ in length, ready for assembly without further processing. The radius cuts must be present on both ends of the boards and must be substantial cuts so as to completely round one corner.
- *Fence pickets* requiring no further processing and properly classified under HTSUS 4421.90.70, 1″ or less in actual thickness, up to 8″ wide, 6′ or less in length, and have finials or decorative cuttings that clearly identify them as fence pickets. In the case of dog-eared fence pickets, the corners of the boards should be cut off so as to remove pieces of wood in the shape of isosceles right angle triangles with sides measuring ¾ inch or more.
- *U.S. origin lumber* shipped to Canada for minor processing and imported into the United States, is excluded from the scope of this order if the following conditions are met: (1) The processing occurring in Canada is limited to kiln-drying, planing to create smooth-to-size board, and sanding, and (2) the importer establishes to U.S. Customs and Border Protection's (CBP) satisfaction that the lumber is of U.S. origin.[3]
- *Softwood lumber products contained in single family home packages or kits,*[4] regardless of tariff classification, are excluded from the

[3] For further clarification pertaining to this exclusion, *see* the additional language concluding the scope description below.

[4] To ensure administrability, we clarified the language of this exclusion to require an importer certification and to permit single or multiple entries on multiple days, as well as instructing importers to retain and make available for inspection specific documentation in support of each entry.

scope of the orders if the following criteria are met:

1. The imported home package or kit constitutes a full package of the number of wooden pieces specified in the plan, design or blueprint necessary to produce a home of at least 700 square feet produced to a specified plan, design or blueprint;

2. The package or kit must contain all necessary internal and external doors and windows, nails, screws, glue, subfloor, sheathing, beams, posts, connectors and, if included in purchase contract, decking, trim, drywall and roof shingles specified in the plan, design or blueprint;

3. Prior to importation, the package or kit must be sold to a retailer of complete home packages or kits pursuant to a valid purchase contract referencing the particular home design plan or blueprint, and signed by a customer not affiliated with the importer;

4. The whole package must be imported under a single consolidated entry when permitted by CBP, whether or not on a single or multiple trucks, rail cars or other vehicles, which shall be on the same day except when the home is over 2,000 square feet;

5. The following documentation must be included with the entry documents:

- A copy of the appropriate home design, plan, or blueprint matching the entry;
- A purchase contract from a retailer of home kits or packages signed by a customer not affiliated with the importer;
- A listing of inventory of all parts of the package or kit being entered that conforms to the home design package being entered;
- In the case of multiple shipments on the same contract, all items listed immediately above which are included in the present shipment shall be identified as well.

We have determined that the excluded products listed above are outside the scope of this order provided the specified conditions are met. Lumber products that CBP may classify as stringers, radius cut box-spring-frame components, and fence pickets, not conforming to the above requirements, as well as truss components, pallet components, and door and window frame parts, are covered under the scope of this order and may be classified under HTSUS subheadings 4418.90.40.90, 4421.90.70.40, and 4421.90.98.40. Due to changes in the 2002 HTSUS whereby subheading 4418.90.40.90 and 4421.90.98.40 were changed to 4418.90.45.90 and 4421.90.97.40, respectively, we are adding these subheadings as well.

In addition, this scope language has been further clarified to now specify that all softwood lumber products entered from Canada claiming non-subject status based on U.S. country of origin will be treated as non-subject U.S.-origin merchandise under the antidumping and countervailing duty orders, provided that these softwood lumber products meet the following condition: upon entry, the importer, exporter, Canadian processor and/or original U.S. producer establish to CBP's satisfaction that the softwood lumber entered and documented as U.S.-origin softwood lumber was first produced in the United States as a lumber product satisfying the physical parameters of the softwood lumber scope.[5] The presumption of non-subject status can, however, be rebutted by evidence demonstrating that the merchandise was substantially transformed in Canada.

Analysis of Comments Received

The issues raised in the case briefs by parties to this administrative review and changed circumstances review are addressed in the Issues and Decision Memorandum from Barbara E. Tillman, Acting Deputy Assistant Secretary, to James J. Jochum, Assistant Secretary for Import Administration, (Decision Memorandum), dated December 13, 2004, which is hereby adopted by this notice. A list of the issues addressed in the Decision Memorandum is appended to this notice. The Decision Memorandum is on file in the Central Records Unit in Room B–099 of the main Commerce building, and can also be accessed directly on the Web at *http://www.ia.ita.doc.gov/frn.* The paper copy and electronic version of the Decision Memorandum are identical in content.

Changes Since the Preliminary Results

Based on our findings at verification, and analysis of comments received, we have made adjustments to the preliminary results calculation methodologies in calculating the final dumping margins in these proceedings. A brief description of the company-specific changes are discussed below. We note that for all respondents, we changed the calculation of normal value in our programming language so that the level of trade (LOT) adjustment was added to normal value instead of subtracted.

Abitibi

In the *Preliminary Results,* we applied the adjustment for the byproduct offset to company-wide costs, but for the final results, we applied the adjustment to the cost of the mills in each province requiring an adjustment. Therefore, we applied the adjustment for the byproduct offset for wood chips on a province-specific basis.

Slocan

In the *Preliminary Results,* the Department applied the U.S. Federal Reserve short-term interest rate in Slocan's calculations. Based on verification, the Department have now used a London Inter-Bank Offer Rate (LIBOR) in Slocan's calculations. The Department has also modified its programming language to reflect Slocan's billing adjustment fields as reported on a total per-line basis, and unlike in the *Preliminary Results,* the Department has refrained from deducting future revenues from Slocan's U.S. price.

Tembec

For wood chips sold to affiliates, we made province-specific adjustments and applied the adjustments to the mills involved in affiliated sales of wood chips within the particular province.

We recalculated Tembec's general and administrative (G&A) expense rate by allocating the corporate G&A expenses to all of its consolidated subsidiaries and joint ventures. We also revised Tembec's comparison market program to correctly incorporate all the home market verification changes.

Tolko

We adjusted Tolko's reported cost of manufacture (TOTCOM) upward to account for purchases of logs from affiliated parties at non-arm's-length prices.

West Fraser

The Department used the incorrect database in the calculation of West Fraser's cost of production in the preliminary margin calculation. Therefore, for the final results, we used West Fraser's cost file based on the length-specific prices. We also applied the adjustment for the byproduct offset for wood chips on a province-specific basis. In the *Preliminary Results,* we applied the adjustment for the byproduct offset to company-wide costs, but for the final results, we applied the adjustment to the cost of the mills in each province requiring an adjustment.

[5] *See* the scope clarification message (3034202), dated February 3, 2003, to CBP, regarding treatment of U.S.-origin lumber on file in the Central Records Unit, Room B–099 of the main Commerce Building.

Weyerhaeuser

We have included purchased and harvested wood costs in the denominator used to calculate the adjustment factor related to miscellaneous revenues and expenses. For the *Preliminary Results,* we incorrectly applied the finger-jointing costs to all products, not just finger-jointed products. Therefore, for the final results we have revised the programming instructions to correct for this error. We have also revised Weyerhaeuser's G&A expense rate to include the closure and severance expenses incurred at the WCL and WSL level in their respective companies' G&A expense rates. In addition, we revised the headquarter parent company G&A expense rate, used to allocate the portion of the parent company expenses incurred on behalf of WCL and WSL, to exclude all charges for closure and severance expenses and a gain on a sale of a timberland located in the United States. We also changed the level of trade (LOT) classification of U.S. Vendor Managed Inventory sales from LOT 2 to LOT 1. We also recalculated U.S. inventory carrying costs using a short-term borrowing rate associated with U.S.-dollar loans in the United States. Additionally, where necessary, we changed our formula for this calculation to include gross unit price, net of U.S. selling expenses, instead of the total cost of manufacturing (TOTCOM). Finally, we added programming language to the margin program to ensure that there were no similar matches across product characteristics for category, species, or NLGA grade group.

Final Results of Changed Circumstances Review

Based on the information provided by Canfor, and the fact that neither Canfor nor the petitioner raised any objections in their invited comments during the period following the preliminary results of this review, the Department determines that post-merger Canfor will be assigned a cash deposit rate reflecting a weighted-average of Canfor's and Slocan's respective cash deposit rates prior to the merger. Therefore, Canfor's new cash deposit rate is stated below in the ''Final Results'' section. The new deposit rate will become effective upon publication of this notice in the **Federal Register**

Review-Specific Average Rate

Due to the number of mandatory selected respondents, requests by companies to be considered as voluntary respondents, and complex circumstances unique to this review, the Department was not able to review all companies under the antidumping order. Therefore, the Department has determined a review-specific weighted-average margin for those companies that requested, but were not selected for, individual review. The review-specific average rate for these companies can be found in the final results below. This is distinguished from the ''All Others'' Rate, which is the weighted-average margin calculated in the investigation and which continues to apply to all exporters and producers not listed below.

Final Results of Review

As a result of our review, we determine that the following weighted-average margins exist for the period of April 10, 2002, through September 30, 2003:

Producer	Weighted-average margin (percentage)
Abitibi (and its affiliates Produits Forestiers Petit Paris Inc., Produits Forestiers La Tuque Inc., and Societe En Commandite Scierie Opticiwan)	3.12
Buchanan (and its affiliates Atikokan Forest Products Ltd., Long Lake Forest Products Inc., Nakina Forest Products Limited,[6] Buchanan Distribution Inc., Buchanan Forest Products Ltd., Great West Timber Ltd., Dubreuil Forest Products Ltd., Northern Sawmills Inc., McKenzie Forest Products Inc., Buchanan Northern Hardwoods Inc., Northern Wood, and Solid Wood Products Inc.)	4.76
Canfor[7] (and its affiliates Canadian Forest Products, Ltd, Lakeland Mills Ltd., The Pas Lumber Company Ltd., Howe Sound Pulp and Paper Limited Partnership, and Skeena Cellulose)	1.83
Tembec (and its affiliates Marks Lumber Ltd., Excel Forest Products, Les Industries Davidson Inc., Produits Forestiers Temrex Limited Partnership[8])	10.59
Tolko (and its affiliates Gilbert Smith Forest Products Ltd., Compwood Products Ltd., and Pinnacle Wood Products Ltd.)	3.85
West Fraser (and its affiliates West Fraser Forest Products Inc., and Seehta Forest Products Ltd.)	0.92
Weyerhaeuser (and its affiliates Weyerhaeuser Saskatchewan Ltd. and Monterra Lumber Mills Limited[9])	8.70
Review-specific average rate applicable to the following companies:	
2 by 4 Lumber Sales Ltd.	
440 Services Ltd.	
582912 B.C. Ltd. (DBA Paragon Wood Products, Lumby)	
AFA Forest Products Inc.	
A.J. Forest Products Ltd.	
A.L. Stuckless & Sons Limited	
Abitibi-LP Engineered Wood, Inc.	
Age Cedar Products	
Alberta Spruce Industries Ltd.	
Allmac Lumber Sales Ltd.	
Alpa Lumber Mills Inc.	
American Bayridge Corporation	
Apex Forest Products Inc.	
Apollo Forest Products Ltd.	
Aquila Cedar Products Ltd.	
Arbutus Manufacturing Ltd.	
Armand Duhamel et fils Inc.	
Ashley Colter (1961) Limited	
Aspen Planers Ltd.	
Associated Cedar Products.	
Atco Lumber Ltd.	
AWL Forest Products	
Bakerview Forest Products Inc.	

Producer	Weighted-average margin (percentage)
Barrett Lumber Company Limited	
Barrette-Chapais Ltee	
Barry Maedel Woods & Timber	
Beaubois Coaticook Inc.	
Blanchette et Blanchette Inc.	
Bloomfield Lumber Limited	
Bois Cobodex (1995) Inc.	
Bois Daaquam Inc.	
Bois d'oeuvre Cedrico Inc.	
Bois Neos Inc.	
Bois Omega Ltee	
Bois Rocam Inc.	
Boisaco Inc.	
Boucher Forest Products Ltd.	
Bowater Canadian Forest Products Incorporated	
Bridgeside Higa Forest Industries Ltd.	
Brittania Lumber Company Limited	
Brouwer Excavating Ltd.	
Brunswick Valley Lumber Inc.	
Buchanan Lumber	
Burrows Lumber Inc.	
BW Creative Wood	
Byrnexco Inc.	
C.E. Harrison & Sons Ltd.	
Caledon Log Homes (FEWO)	
Caledonia Forest Products Ltd.	
Cambie Cedar Products Ltd.	
Canadian Lumber Company Ltd.	
Cando Contracting Ltd.	
Canex International Lumber Sales Ltd.	
Canwel Distribution Ltd.	
Canyon Lumber Company Ltd.	
Cardinal Lumber Manufacturing & Sales Inc	
Carrier Forest Products Ltd.	
Carrier Lumber Ltd.	
Carson Lake Lumber	
Cedarland Forest Products Ltd.	
Central Cedar	
Centurion Lumber Manufacturing (1983) Ltd.	
Chaleur Sawmills	
Cheminis Lumber Inc.	
Cheslatta Forest Products Ltd.	
Chisholm's (Roslin) Ltd.	
Choicewood Products Inc.	
City Lumber Sales & Services Ltd.	
Clair Industrial Development Corp. Ltd. (Waska)	
Clareco Industries Ltd	
Claude Forget Inc.	
Clearwood Industries Ltd.	
Coast Clear Wood Ltd.	
Colonial Fence Mfg. Ltd.	
Comeau Lumber Ltd.	
Commonwealth Plywood Co. Ltd.	
Cooper Creek Cedar Ltd.	
Cooperative Forestiere Laterriere	
Cottle's Island Lumber Co. Ltd.	
Coventry Forest Products Ltd.	
Cowichan Lumber Ltd	
Crystal Forest Industries Ltd.	
Curley's Cedar Post & Rail	
Cushman Lumber Co. Inc.	
D.S. McFall Holding Ltd.	
Dakeryn Industries Ltd.	
Deep Cove Forest Products	
Delco Forest Products Ltd.	
Delta Cedar Products Ltd.	
Devlin Timber Company (1992) Limited	
Devon Lumber Co. Ltd.	
Doman Forest Products Limited	
Doman Industries Limited	
Doman Western Lumber Ltd.	
Domexport Inc.	

Producer	Weighted-average margin (percentage)
Domtar Inc.	
Downie Timber Ltd.	
Duluth Timber Company	
Dunkley Lumber Ltd.	
E. Tremblay et fils Ltee	
E.R. Probyn Export Ltd.	
Eacan Timber Canada Ltd.	
Eacan Timber Limited	
Eacan Timber USA Ltd.	
East Fraser Fiber Co. Ltd.	
Eastwood Forest Products Inc.	
Edwin Blaikie Lumber Ltd.	
Elmira Wood Products Limited	
Elmsdale Lumber Company Limited	
Evergreen Empire Mills Incorporated	
EW Marketing	
F.L. Bodogh Lumber Co. Ltd.	
Falcon Lumber Limited	
Faulkener Wood Specialities Ltd.	
Fawcett Lumber	
Federated Co-operative Limited	
Finmac Lumber Limited	
Fontaine Inc. (dba J.A. Fontaine et fils Incorporee)	
Fraser Inc.	
Fraser Pacific Forest Products Inc.	
Fraser Pacific Lumber Company	
Fraser Pulp Chips Ltd.	
Fraserview Cedar Products Ltd	
Frontier Mills Inc.	
Georgetown Timber Limited	
Georgian Bay Forest Products Ltd.	
Gestofor Inc.	
Gogama Forest Products	
Goldwood Industries Ltd.	
Goodfellow Inc.	
Gorman Bros. Lumber Ltd.	
Great Lakes MSR Lumber Ltd.	
Greenwood Forest Products (1983) Ltd.	
Groupe Cedrico Inc.	
H.A. Fawcett & Son Limited	
H.J. Crabbe & Sons Ltd.	
Haida Forest Products Ltd.	
Hainesville Sawmill Ltd.	
Harry Freeman & Son Ltd.	
Hefler Forest Products Ltd.	
Hi-Knoll Cedar Inc.	
Hilmoe Forest Products Ltd.	
Hoeg Bros. Lumber Ltd.	
Holdright Lumber Products Ltd.	
Hudson Mitchell & Sons Lumber Inc.	
Hughes Lumber Specialities Inc.	
Hyak Speciality Wood	
Industrial Wood Specialities	
Industries Maibec Inc.	
Industries Perron Inc.	
Interior Joinery Ltd.	
International Forest Products Limited (Interfor)	
Isidore Roy Limited	
Ivis Wood Products	
J.A. Turner & Sons (1987) Limited	
J.D. Irving, Limited	
Jackpine Engineered Wood Products Inc.	
Jackpine Forest Products Ltd.	
Jamestown Lumber Company Limited	
Jasco Forest Products Ltd.	
Jointfor (3207021) Canada, Inc.	
Julimar Lumber Co. Limited	
Kenora Forest Products Limited	
Kent Trusses Ltd.	
Kenwood Lumber Ltd.	
Kispiox Forest Products	
Kruger, Inc.	

Producer	Weighted-average margin (percentage)
Lakeburn Lumber Limited	
Landmark Structural Lumber	
Landmark Truss & Lumber Inc.	
Langevin Forest Products, Inc.	
Langley Timber Company Ltd.	
Lawson Lumber Company Ltd.	
Lazy S Lumber	
Lecours Lumber Company	
Ledwidge Lumber Co. Ltd	
Leggett & Platt	
LeggettWood	
Les Bois d'Oeuvre Beaudoin & Gautheir Inc.	
Les Bois Lemelin Inc.	
Les Bois S&P Grondin Inc.	
Les Produits Forestiers D.G. Ltee	
Les Produits Forestiers Dube Inc.	
Les Produits Forestiers F.B.M. Inc.	
Les Produits Forestiers Maxibois Inc.	
Les Produits Forestiers Miradas Inc.	
Les Produits Forestiers Portbec Ltee	
Les Scieries du Lac St Jean Inc.	
Leslie Forest Products Ltd.	
Lignum Ltd.	
Lindsay Lumber Ltd.	
Liskeard Lumber Ltd.	
Littles Lumber Ltd.	
Lonestar Lumber Inc.	
Louisiana Pacific Corporation	
LP Canada Ltd.	
LP Engineered Wood Products Ltd.	
Lulumco Inc.	
Lyle Forest Products Ltd.	
M&G Higgins Lumber Ltd.	
M.F. Bernard Inc.	
M.L. Wilkins & Son Ltd.	
MacTara Limited	
Manitou Forest Products Ltd.	
Maple Creek Saw Mills Inc.	
Marcel Lauzon Inc.	
Marwood Ltd.	
Mary's River Lumber	
Materiaux Blanchette Inc.	
Max Meilleur & Fils Ltee	
McCorquindale Holdings Ltd.	
McNutt Lumber Company Ltd.	
Mercury Manufacturing Inc.	
Meunier Lumber Company Ltd.	
Mid America Lumber	
Midland Transport Limited	
Midway Lumber Mills Ltd.	
Mill & Timber Products Ltd.	
Millar Western Forest Products Ltd.	
Millco Wood Products Ltd.	
Mobilier Rustique (Beauce) Inc.	
Monterra Lumber Mills Limited	
Mountain View Specialty Products & Reload Inc.	
Murray A. Reeves Forestry Limited	
New West Lumber Ltd.	
N.F. Douglas Lumber Limited	
Nechako Lumber Co. Ltd.	
Newcastle Lumber Co. Inc.	
Nexfor Inc.	
Nicholson and Cates Limited	
Nickel Lake Lumber	
Norbord Industries Inc.	
North American Forest Products Ltd.	
North Enderby Timber Ltd.	
North Mitchell Lumber Co. Ltd.	
North Shore Timber Ltd.	
North Star Wholesale Lumber Ltd.	
Northchip Ltd.	
Northland Forest Products	

Producer	Weighted-average margin (percentage)
Olav Haavaldsrud Timber Company	
Olympic Industries Inc.	
Optibois Inc.	
P.A. Lumber & Planing Mill	
Pacific Lumber Remanufacturing Inc.	
Pacific Northern Rail Contractors Corp.	
Pacific Western Woodworks Ltd.	
Pallan Timber Products (2000) Ltd.	
Palliser Lumber Sales Ltd.	
Pan West Wood Products Ltd.	
Paragon Ventures Ltd. (DBA Paragon Wood Products, Grindrod)	
Parallel Wood Products Ltd.	
Pastway Planing Limited	
Pat Power Forest Products Corp.	
Paul Vallee Inc.	
Peak Forest Products Ltd.	
Peter Thomson & Sons Inc.	
Phoenix Forest Products Inc.	
Pope & Talbot Inc.	
Porcupine Wood Products Ltd.	
Portelance Lumber Capreol Ltd.	
Power Wood Corp.	
Precibois Inc.	
Preparabois Inc.	
Prime Lumber Limited	
Pro Lumber Inc.	
Produits Forestiers Labrieville	
Quadra Wood Products Ltd.	
R. Fryer Forest Products Ltd.	
Raintree Lumber Specialties Ltd.	
Ramco Lumber Ltd.	
Redtree Cedar Products Ltd.	
Redwood Value Added Products Inc.	
Ridgewood Forest Products Ltd.	
Rielly Industrial Lumber, Inc.	
Riverside Forest Products Ltd.	
Rojac Cedar Products Inc.	
Rojac Enterprises Inc.	
Rouck Bros. Sawmill Ltd.	
Russell White Lumber Limited	
Sauder Industries Limited	
Sawn Wood Products	
Schols Cedar Products	
Scierie Adrien Arseneault Ltee	
Scierie Beauchesne et Dube Inc	
Scierie Gaston Morin Inc.	
Scierie La Patrie, Inc.	
Scierie Landrienne Inc.	
Scierie Lapointe & Roy Ltee	
Scierie Leduc	
Scierie Nord-Sud Inc.	
Scierie West Brome Inc.	
Scott Lumber Ltd.	
Selkirk Speciality Wood Ltd.	
Shawood Lumber Inc.	
Sigurdson Bros. Logging Co. Ltd.	
Silvermere Forest Products Inc.	
Sinclar Enterprises Ltd.[10]	
Skana Forest Products Ltd.	
South-East Forest Products Ltd.	
South River Planing Mills Inc	
Spray Lake Sawmills (1980) Ltd.	
Spruce Forest Products Ltd.	
Spruce Products Limited	
St. Anthony Lathing Mills Ltd.	
St. Jean Lumber (1984) Ltd.	
Standard Building Products Ltd.	
Still Creek Forest Products Ltd.	
Stuart Lake Lumber Co. Ltd.	
Stuart Lake Marketing Company	
Sunbury Cedar Sales Ltd.	
Suncoast Lumber & Milling	

Producer	Weighted-average margin (percentage)
Sundance Forest Industries	
SWP Industries Inc.	
Sylvanex Lumber Products Inc.	
T.P. Downey & Sons Ltd.	
Taiga Forest Products	
Tarpin Lumber Incorporated	
Teal-Jones Group	
Teeda Corp	
Terminal Forest Products Ltd.	
T.F. Specialty Sawmill	
TimberWorld Forest Products Inc.	
T'loh Forest Products Limited Partnership	
Treeline Wood Products Ltd.	
Triad Forest Products Ltd.	
Twin Rivers Cedar Products Ltd.	
Tyee Timber Products Ltd.	
United Wood Frames Inc.	
Usine Sartigan Inc.	
Vancouver Specialty Cedar Products Ltd.	
Vanderhoof Specialty Wood Products	
Vandermeer Forest Products (Canada) Ltd.	
Vanderwell Contractors (1971) Ltd.	
Vanport Canada Co.	
Vernon Kiln & Millwork Ltd.	
Visscher Lumber Inc.	
W.C. Edwards Lumber	
W.I. Woodtone Industries Inc.	
Welco Lumber Corporation	
Weldwood of Canada Limited	
Wentworth Lumber Ltd.	
Wernham Forest Products	
West Bay Forest Products & Manufacturing Ltd.	
West Can Rail Ltd.	
West Chilcotin Forest Products Ltd.	
West Hastings Lumber Products	
Western Cleanwood Preservers Ltd.	
Western Commercial Millwork Inc.	
Western Wood Preservers Ltd.	
Westmark Products Ltd.	
Weston Forest Corp.	
West-Wood Industries Ltd.	
White Spruce Forest Products Ltd.	
Wilkerson Forest Products Ltd.	
Williams Brothers Limited	
Winnipeg Forest Products, Inc	
Woodko Enterprises Ltd	
Woodland Forest Products Ltd.	
Woodline Forest Products Ltd.	
Woodtone Industries, Inc.	
Wynndel Box & Lumber Co. Ltd	4.03.

[6] We note that Nakina Forest Products Limited is a division of Long Lake Forest Products, Inc., an affiliate of Buchanan Lumber Sales.

[7] As stated in the final results of changed circumstances review, Canfor's weighted-average margin is based upon a weighted-average of Canfor's and Slocan's respective cash deposit rates prior to the merger. See Memorandum from Daniel O'Brien, International Trade Compliance Analyst, to The File, Re: Cash Deposit Rate for Canfor Corporation (December 13, 2004). We also note that, during the POR, Sinclar Enterprises Ltd. (Sinclar) acted as an affiliated reseller for Lakeland, an affiliate of Canfor. In this review, we reviewed the sales of Canfor and its affiliates; therefore, Canfor's weighted-average margin applies to all sales of subject merchandise produced by any member of the Canfor Group and sold by Sinclar. As Sinclar also separately requested a review, any sales of subject merchandise produced by another manufacturer and sold by Sinclar will receive the ''Review-Specific All Others'' rate. Finally, we note that Canadian Forest Products, Ltd, is a wholly owned subsidiary of Canfor and will receive Canfor's weighted-average margin.

[8] We note that Produits Forestiers Temrex Limited Partnership is the same entity as the company Produits Forestiers Temrex Usine St. Alphonse, Inc. included in the initiation notice. See Notice of Initiation of Antidumping Duty Administrative Review, 68 FR 39059 (July 1, 2003).

[9] Based on the final results of the changed circumstances review, Monterra shall receive Weyerhaeuser's weighted-average margin until December 23, 2002; thereafter, the company will be subject to the review-specific average rate. See Notice of Final Results of Antidumping Duty Changed Circumstances Review, 68 FR 54891 (September 19, 2003).

[10] See footnote 7

Assessment

The Department will determine, and CBP shall assess, antidumping duties on all appropriate entries, pursuant to 19 CFR 351.212(b). The Department calculated importer-specific duty assessment rates on the basis of the ratio of the total amount of antidumping duties calculated for the examined sales to the total entered value of the examined sales for that importer. Where the assessment rate is above *de minimis,* we will instruct CBP to assess duties on all entries of subject merchandise by

that importer. The Department will issue appropriate assessment instructions directly to CBP within 15 days of publication of these final results of review.

Cash Deposits

Furthermore, the following deposit requirements will be effective upon publication of the final results of this administrative review for all shipments of certain softwood lumber products from Canada entered, or withdrawn from warehouse, for consumption on or after the publication date of these final results, as provided by section 751(a) of the Tariff Act of 1930 (the Act), as amended: (1) For companies covered by this review, the cash deposit rate will be the rate listed above; (2) for merchandise exported by producers or exporters not covered in this review but covered in the investigation, the cash deposit rate will continue to be the company-specific rate from the final determination in the less-than-fair-value investigation; (3) if the exporter is not a firm covered in this review or the investigation, but the producer is, the cash deposit rate will be that established for the producer of the merchandise in these final results of review or in the final determination; and (4) if neither the exporter nor the producer is a firm covered in this review or the investigation, the cash deposit rate will be 8.43 percent, the ''All Others'' rate established in the less-than-fair-value investigation. These deposit requirements shall remain in effect until publication of the final results of the next administrative review.

This notice also serves as a final reminder to importers of their responsibility under 19 CFR 351.402(f) to file a certificate regarding the reimbursement of antidumping duties prior to liquidation of the relevant entries during this review period. Failure to comply with this requirement could result in the Secretary's presumption that reimbursement of antidumping duties occurred, and in the subsequent assessment of double antidumping duties.

This notice also is the only reminder to parties subject to administrative protective order (APO) of their responsibility concerning the return or destruction of proprietary information disclosed under APO in accordance with 19 CFR 351.305. Timely written notification of the return/destruction of APO materials or conversion to judicial protective order is hereby requested. Failure to comply with the regulations and the terms of an APO is a sanctionable violation.

We are issuing and publishing these results and notice in accordance with sections 751(a)(1) and 777(i)(1) of the Act.

Dated: December 13, 2004.

James J. Jochum,

Assistant Secretary for Import Administration.

Appendix

I. *General Issues*
- Comment 1: Treatment of Countervailing Duties
- Comment 2: Collection of Cash Deposits
- Comment 3: Value-Based Cost Methodology
- Comment 4: Treatment of Non-Dumped Sales
- Comment 5: Price Reallocation
- Comment 6: Liquidation Instructions
- Comment 7: Valuation of Wood Chips
- Comment 8: Inclusion of Purchase Costs for Commingled Lumber

II. *Company-Specific Issues*
- *Issues Specific to Abitibi*
- Comment 9: General and Administrative Expense Offset-Sale of a Line of Business
- Comment 10: Calculation of Financial Expense Ratio-Asset or Cost of Sales Allocation
- Comment 11: Cost of Machine Stress Rated Testing
- *Issues Specific to Buchanan*
- Comment 12: Calculation of Buchanan's Credit Expense
- Comment 13: Assessment Rate for Buchanan Affiliates
- *Issues Specific to Canfor*
- Comment 14: Sinclar as an Affiliated Reseller
- Comment 15: Treatment of Purchased Lumber as Commingled Inventory
- Comment 16: Railcar Lease Revenue
- Comment 17: Calculation of Financial Expense Ratio-Net Financial Income
- Comment 18: Calculation of General and Administrative Expenses-Sale of Land
- Comment 19: Cash Deposit Rate Instructions
- *Issues Specific to Slocan*
- Comment 20: Calculation of Stumpage Costs By Species
- Comment 21: Interest Expense Calculation-Credit Expense
- Comment 22: Clerical Error Allegations
- *Issues Specific to Tembec*
- Comment 23: General and Administrative Expense Rates-Consolidated vs. Producer
- Comment 24: Financial Expense Ratio-Foreign Exchange Gains and Losses
- Comment 25: Clerical Errors
- *Issues Specific to Tolko*
- Comment 26: Lavington Sales
- Comment 27: Unreconciled Cost Differences
- Comment 28: Log Purchases from Affiliated Parties
- Comment 29: General and Administrative Expenses-Payments to Trade Council
- Comment 30: Allocation of Mixed-Length Tallies
- *Issues Specific to West Fraser*
- Comment 31: Exemption from Administrative Review
- Comment 32: Length-Specific Background Prices
- Comment 33: Start-Up Adjustment
- *Issues Specific to Weyerhaeuser*
- Comment 34: Freight Calculations
- Comment 35: General and Administrative Expense Calculation—Severance and Closure Sale of Timber Mill
- Comment 36: British Columbia Coastal's Log Costs
- Comment 37: Below-Cost Sales
- Comment 38: Level of Trade Classification of Home Market and U.S. Vendor Managed Inventory Sales
- Comment 39: Interest Rate for U.S. Inventory Carrying Costs
- Comment 40: Clerical Errors
- Comment 41: Clerical Errors in Cost Calculation
- *Issues Specific to Lignum*
- Comment 42: Respondents Selected for Administrative Review
- *Issues Specific to the Changed Circumstances Review*
- Comment 43: Changed Circumstances Review

[FR Doc. E4–3751 Filed 12–17–04; 8:45 am]

BILLING CODE 3510–DS–P

DEPARTMENT OF COMMERCE

International Trade Administration

A–428–825

Stainless Steel Sheet and Strip in Coils From Germany; Notice of Final Results of Antidumping Duty Administrative Review

AGENCY: Import Administration, International Trade Administration, Department of Commerce.

SUMMARY: On August 6, 2004, the Department of Commerce (the Department) published the preliminary results of administrative review of the antidumping order covering stainless steel sheet and strip in coils from Germany. *See Stainless Steel Sheet and Strip in Coils from Germany; Notice of Preliminary Results of Antidumping Duty Administrative Review*, 69 FR 47900 (August 6, 2004) (*Preliminary Results*). The merchandise covered by this order is stainless steel sheet and strip in coils as described in the ''Scope of the Review'' section of the **Federal Register** notice. The period of review (POR) is July 1, 2002, through June 30, 2003. We invited parties to comment on our *Preliminary Results*. Based on our analysis of the comments received, we have made changes in the margin calculations. Therefore, the final results differ from the preliminary results. The final weighted-average dumping margin for the reviewed firm is listed below in the section entitled ''Final Results of the Review.''

EFFECTIVE DATE: December 20, 2004.

FOR FURTHER INFORMATION CONTACT: Michael Heaney, or Robert James at (202) (202) 482–4475, or (202) 482–0649, respectively, AD/CVD Operations, Office 7, Import Administration, International Trade Administration, U.S. Department of Commerce, 14th Street and Constitution Avenue, NW., Washington, DC 20230.

SUPPLEMENTARY INFORMATION:

Scope of the Review

The products covered by this order are certain stainless steel sheet and strip in coils. Stainless steel is an alloy steel containing, by weight, 1.2 percent or less of carbon and 10.5 percent or more of chromium, with or without other elements. The subject sheet and strip is a flat-rolled product in coils that is greater than 9.5 mm in width and less than 4.75 mm in thickness, and that is annealed or otherwise heat treated and pickled or otherwise descaled. The subject sheet and strip may also be further processed (*e.g.*, cold-rolled, polished, aluminized, coated, etc.) provided that it maintains the specific dimensions of sheet and strip following such processing. The merchandise subject to this order is currently classifiable in the Harmonized Tariff Schedule of the United States (HTS) at subheadings: 7219.13.0031, 7219.13.0051, 7219.13.0071, 7219.1300.81,[1] 7219.14.0030, 7219.14.0065, 7219.14.0090, 7219.32.0005, 7219.32.0020, 7219.32.0025, 7219.32.0035, 7219.32.0036, 7219.32.0038, 7219.32.0042, 7219.32.0044, 7219.33.0005, 7219.33.0020, 7219.33.0025, 7219.33.0035, 7219.33.0036, 7219.33.0038, 7219.33.0042, 7219.33.0044, 7219.34.0005, 7219.34.0020, 7219.34.0025, 7219.34.0030, 7219.34.0035, 7219.35.0005, 7219.35.0015, 7219.35.0030, 7219.35.0035, 7219.90.0010, 7219.90.0020, 7219.90.0025, 7219.90.0060, 7219.90.0080, 7220.12.1000, 7220.12.5000, 7220.20.1010, 7220.20.1015, 7220.20.1060, 7220.20.1080, 7220.20.6005, 7220.20.6010, 7220.20.6015, 7220.20.6060, 7220.20.6080, 7220.20.7005, 7220.20.7010, 7220.20.7015, 7220.20.7060, 7220.20.7080, 7220.20.8000, 7220.20.9030, 7220.20.9060, 7220.90.0010, 7220.90.0015, 7220.90.0060, and 7220.90.0080. Although the HTS subheadings are provided for convenience and customs purposes, the Department's written description of the merchandise under review is dispositive.

Excluded from the order are the following: (1) sheet and strip that is not annealed or otherwise heat treated and pickled or otherwise descaled, (2) sheet and strip that is cut to length, (3) plate (*i.e.*, flat-rolled stainless steel products of a thickness of 4.75 mm or more), (4) flat wire (*i.e.*, cold-rolled sections, with a prepared edge, rectangular in shape, of a width of not more than 9.5 mm), and (5) razor blade steel. Razor blade steel is a flat-rolled product of stainless steel, not further worked than cold-rolled (cold-reduced), in coils, of a width of not more than 23 mm and a thickness of 0.266 mm or less, containing, by weight, 12.5 to 14.5 percent chromium, and certified at the time of entry to be used in the manufacture of razor blades. *See* chapter 72 of the HTS, ''Additional U.S. Note'' 1(d).

Flapper valve steel is also excluded from the scope of the order. This product is defined as stainless steel strip in coils containing, by weight, between 0.37 and 0.43 percent carbon, between 1.15 and 1.35 percent molybdenum, and between 0.20 and 0.80 percent manganese. This steel also contains, by weight, phosphorus of 0.025 percent or less, silicon of between 0.20 and 0.50 percent, and sulfur of 0.020 percent or less. The product is manufactured by means of vacuum arc remelting, with inclusion controls for sulphide of no more than 0.04 percent and for oxide of no more than 0.05 percent. Flapper valve steel has a tensile strength of between 210 and 300 ksi, yield strength of between 170 and 270 ksi, plus or minus 8 ksi, and a hardness (Hv) of between 460 and 590. Flapper valve steel is most commonly used to produce specialty flapper valves in compressors.

Also excluded is a product referred to as suspension foil, a specialty steel product used in the manufacture of suspension assemblies for computer disk drives. Suspension foil is described as 302/304 grade or 202 grade stainless steel of a thickness between 14 and 127 microns, with a thickness tolerance of plus-or-minus 2.01 microns, and surface glossiness of 200 to 700 percent Gs. Suspension foil must be supplied in coil widths of not more than 407 mm, and with a mass of 225 kg or less. Roll marks may only be visible on one side, with no scratches of measurable depth. The material must exhibit residual stresses of 2 mm maximum deflection, and flatness of 1.6 mm over 685 mm length.

Certain stainless steel foil for automotive catalytic converters is also excluded from the scope of this order. This stainless steel strip in coils is a specialty foil with a thickness of between 20 and 110 microns used to produce a metallic substrate with a honeycomb structure for use in automotive catalytic converters. The steel contains, by weight, carbon of no more than 0.030 percent, silicon of no more than 1.0 percent, manganese of no more than 1.0 percent, chromium of between 19 and 22 percent, aluminum of no less than 5.0 percent, phosphorus of no more than 0.045 percent, sulfur of no more than 0.03 percent, lanthanum of less than 0.002 or greater than 0.05 percent, and total rare earth elements of more than 0.06 percent, with the balance iron.

Permanent magnet iron-chromium-cobalt alloy stainless strip is also excluded from the scope of this order. This ductile stainless steel strip contains, by weight, 26 to 30 percent chromium, and 7 to 10 percent cobalt, with the remainder of iron, in widths 228.6 mm or less, and a thickness between 0.127 and 1.270 mm. It exhibits magnetic remanence between 9,000 and 12,000 gauss, and a coercivity of between 50 and 300 oersteds. This product is most commonly used in electronic sensors and is currently available under proprietary trade names such as ''Arnokrome III.''[2]

Certain electrical resistance alloy steel is also excluded from the scope of this order. This product is defined as a non-magnetic stainless steel manufactured to American Society of Testing and Materials (ASTM) specification B344 and containing, by weight, 36 percent nickel, 18 percent chromium, and 46 percent iron, and is most notable for its resistance to high temperature corrosion. It has a melting point of 1390 degrees Celsius and displays a creep rupture limit of 4 kilograms per square millimeter at 1000 degrees Celsius. This steel is most commonly used in the production of heating ribbons for circuit breakers and industrial furnaces, and in rheostats for railway locomotives. The product is currently available under proprietary trade names such as ''Gilphy 36.''[3]

Certain martensitic precipitation-hardenable stainless steel is also excluded from the scope of this order. This high-strength, ductile stainless steel product is designated under the Unified Numbering System (UNS) as S45500-grade steel, and contains, by weight, 11 to 13 percent chromium, and 7 to 10 percent nickel. Carbon,

[1] Due to changes to the HTS numbers in 2001, 7219.13.0030, 7219.13.0050, 7219.13.0070, and 7219.13.0080 are now 7219.13.0031, 7219.13.0051, 7219.13.0071, and 7219.13.0081, respectively.

[2] ''Arnokrome III'' is a trademark of the Arnold Engineering Company.

[3] ''Gilphy 36'' is a trademark of Imphy, S.A.

manganese, silicon and molybdenum each comprise, by weight, 0.05 percent or less, with phosphorus and sulfur each comprising, by weight, 0.03 percent or less. This steel has copper, niobium, and titanium added to achieve aging, and will exhibit yield strengths as high as 1700 Mpa and ultimate tensile strengths as high as 1750 Mpa after aging, with elongation percentages of 3 percent or less in 50 mm. It is generally provided in thicknesses between 0.635 and 0.787 mm, and in widths of 25.4 mm. This product is most commonly used in the manufacture of television tubes and is currently available under proprietary trade names such as ''Durphynox 17.''[4]

Finally, three specialty stainless steels typically used in certain industrial blades and surgical and medical instruments are also excluded from the scope of this order. These include stainless steel strip in coils used in the production of textile cutting tools (*e.g.*, carpet knives).[5] This steel is similar to AISI grade 420 but containing, by weight, 0.5 to 0.7 percent of molybdenum. The steel also contains, by weight, carbon of between 1.0 and 1.1 percent, sulfur of 0.020 percent or less, and includes between 0.20 and 0.30 percent copper and between 0.20 and 0.50 percent cobalt. This steel is sold under proprietary names such as ''GIN4 Mo.'' The second excluded stainless steel strip in coils is similar to AISI 420–J2 and contains, by weight, carbon of between 0.62 and 0.70 percent, silicon of between 0.20 and 0.50 percent, manganese of between 0.45 and 0.80 percent, phosphorus of no more than 0.025 percent and sulfur of no more than 0.020 percent. This steel has a carbide density on average of 100 carbide particles per 100 square microns. An example of this product is ''GIN5'' steel. The third specialty steel has a chemical composition similar to AISI 420 F, with carbon of between 0.37 and 0.43 percent, molybdenum of between 1.15 and 1.35 percent, but lower manganese of between 0.20 and 0.80 percent, phosphorus of no more than 0.025 percent, silicon of between 0.20 and 0.50 percent, and sulfur of no more than 0.020 percent. This product is supplied with a hardness of more than Hv 500 guaranteed after customer processing, and is supplied as, for example, ''GIN6.''[6]

[4] ''Gilphy 36'' is a trademark of Imphy, S.A.

[5] This list of uses is illustrative and provided for descriptive purposes only.

[6] ''GIN4 Mo,'' ''GIN5'' and ''GIN6'' are the proprietary grades of Hitachi Metals America, Ltd.

Duty Absorption

In these final results, we continue to find duty absorption because Thyssen Krupp Nirosta (TKN) provided no evidence on the record showing that its unaffiliated purchasers will pay the full duty ultimately assessed on the subject merchandise. (*See Preliminary Results* at pages 5–6.)

Analysis of Comments Received

All issues raised in the case and rebuttal briefs by parties to this administrative review are addressed in the ''Issues and Decision Memorandum'' (Decision Memorandum) from Barbara E. Tillman, Acting Deputy Assistant Secretary for Import Administration to James J. Jochum, Assistant Secretary for Import Administration, dated December 13, 2004, which is hereby adopted by this notice. A list of the issues which parties have raised and to which we have responded, all of which are in the Decision Memorandum, is attached to this notice as an appendix. Parties can find a complete discussion of all issues raised in this review and the corresponding recommendations in this public memorandum which is on file in room B–099 of the main Department of Commerce building. In addition, a complete version of the Decision Memorandum can be accessed directly on the internet at *www.ia.ita.doc.gov.* The paper copy and electronic version of the Decision Memorandum are identical in content.

Changes Since the Preliminary Results

Based on our analysis of comments received, we have made changes in the margin calculations. The changes are listed below:

• We have applied TKN's average short-term lending rate for the POR, rather than for the extended POR (including the ''window months''); and

• We have corrected certain programming and clerical errors in our preliminary results, where applicable. Any alleged programming errors with which we do not agree are discussed in the relevant sections of the Decision Memorandum, accessible in B–099 of the main Department of Commerce building and on the web at *www.ia.ita.doc.gov.*

Final Results of the Review

We determine the following percentage weighted-average margin exists for the period July 1, 2002 through June 30, 2003:

Manufacturer / exporter	Weighted average margin (percentage)
Thyseen Krupp Nirosta	7.03 percent

Liquidation

The Department shall determine, and U.S. Bureau of Customs and Border Protection (Customs) shall assess, antidumping duties on all appropriate entries. In accordance with 19 CFR 351.212(b)(1), we have calculated exporter/importer-specific assessment rates. To calculate these rates, we divided the total dumping margins for the reviewed sales by the total entered value of those reviewed sales for each importer. The Department will issue appropriate assessment instructions directly to Customs within 15 days of publication of these final results of review. We will direct Customs to assess the appropriate assessment rate against the entered Customs values for the subject merchandise on each of the importer's entries under the relevant order during the POR.

Cash Deposit Requirements

The following cash deposit requirements will be effective upon publication of this notice of final results of administrative review for all shipments of stainless steel sheet and strip in coils from Germany entered, or withdrawn from warehouse, for consumption on or after the date of publication, as provided by section 751(a)(1) of the Tariff Act of 1930 as amended (the Act): (1) The cash deposit rate for the reviewed company will be the rate shown above; (2) for previously reviewed or investigated companies not listed above, the cash deposit rate will continue to be the company-specific rate published for the most recent period; (3) if the exporter is not a firm covered in this review, a prior review, or the original less-than-fair-value (LTFV) investigation, but the manufacturer is, the cash deposit rate will be the rate established for the most recent period for the manufacturer of the merchandise; and (4) the cash deposit rate for all other manufacturers or exporters will continue to be 13.48 percent. This rate is the ''All Others'' rate from the amended final determination in the LTFV investigations. *See Stainless Steel Sheet and Strip in Coils From Germany: Amended Final Determination of Antidumping Duty Investigation*, 67 FR 15178, 15179 (March 29, 2002).

These deposit requirements shall remain in effect until the publication of the final results of the next administrative review.

This notice also serves as a final reminder to importers of their responsibility under 19 CFR 351.402(f) to file a certificate regarding the reimbursement of antidumping or countervailing duties prior to liquidation of the relevant entries during this review period. Failure to comply with this requirement could result in the Secretary's presumption that reimbursement of antidumping or countervailing duties occurred and the subsequent assessment of doubled antidumping duties.

This notice also serves as a reminder to parties subject to administrative protective orders (APO) of their responsibility concerning the return or destruction of proprietary information disclosed under APO in accordance with 19 CFR 351.305. Timely written notification of the return or destruction of APO materials or conversion to judicial protective order is hereby requested. Failure to comply with the regulations and terms of an APO is a violation which is subject to sanction.

We are issuing and publishing this determination and notice in accordance with sections 751(a)(1) and 777(i) of the Tariff Act.

Dated: December 13, 2004.

James J. Jochum,

Assistant Secretary for Import Administration.

APPENDIX

Comments and Responses

1. Repurchase of ThyssenKrupp AG Shares
2. Interest Income Offset
3. Adjustment for Packing Cost
4. NSC Bundled Sales
5. Treatment of Non-dumped Sales
6. Whether to Split Gauge Group 16
7. Other Revisions

[FR Doc. E4–3745 Filed 12–17–04; 8:45 am]

Billing Code 3510–DS–P

DEPARTMENT OF COMMERCE

National Oceanic and Atmospheric Administration

Meeting of the Chairs of the National Marine Sanctuary Program's Sanctuary Advisory Councils

AGENCY: National Marine Sanctuary Program (NMSP), National Ocean Service (NOS), National Oceanic and Atmospheric Administration, Department of Commerce (DOC).

ACTION: Notice.

SUMMARY: The National Marine Sanctuary Program (NMSP) is holding a meeting of the Chairs of its eleven site-specific Sanctuary Advisory Councils (Councils). The purpose of the meeting is to obtain input on the following policy topics: cruise ships, marine reserves, aquaculture and, if time allows, bioprospecting. The NMSP will also provide updates to the Chairs on the following subjects: reauthorization of the National Marine Sanctuaries Act, NMSP Strategic Plan, NMSP policy topics discussed during 2004 meeting, NMSP maritime heritage activities, and NMSP telepresence projects. The meeting will be open to the public. Opportunities for public comment will be provided at 8:45 a.m. and 4 p.m. on a first-come, first-serve basis.

Members of the public wishing to provide comments will be asked to sign up upon arrival and will likely be limited in how much time they will be allotted for comments (depending upon the number of speakers). A maximum of fifteen minutes will be allotted at 8:45 a.m. and again at 4 p.m. for public comments.

DATES: The meeting will be held on Thursday, February 10, 2005, from 8:30 a.m. to 4:15 p.m. Opportunities for public comment will be provided at 8:45 a.m. and 4 p.m.

ADDRESSES: The meeting will be held at The Red Barn, Point Reyes National Seashore HQ/Cordell Bank NMS Office, 1 Bear Valley Road, Olema, CA.

FOR FURTHER INFORMATION CONTACT: Karen Brubeck at (206) 842–6084 or *Katen.Brubeck@noaa.gov*; or Elizabeth Moore at (301) 713–3125 ext. 170 or *Elizabeth.Moore@noaa.gov.*

SUPPLEMENTARY INFORMATION: The National Marine Sanctuaries Act (NMSA) authorizes the Secretary of Commerce to establish one or more Advisory Councils to provide advice to the Secretary regarding the designation and management of National Marine Sanctuaries. Eleven Councils exist, for the Channel Islands, Cordell Bank, Florida Keys, Gray's Reef, Gulf of the Farallones, Hawaiian Islands Humpback Whale, Monterey Bay, Olympic Coast, Stellwagen Bank, and Thunder Bay National Marine Sanctuaries and the Northwestern Hawaiian Islands Coral Reef Ecosystem Reserve and proposed Sanctuary. Councils represent a wide variety of community interests and are active in various projects and issues affecting the management of their local Sanctuaries; Councils generally meet on a monthly or bimonthly basis.

Each year, the NMSP hosts a meeting for all the Council Chairs and Coordinators to discuss projects and topics of mutual interest (This meeting will be the fifth such meeting). This year, for the third time, the Chairs are being asked to provide input to the national program leadership on policy topics important on a programmatic rather than a site-specific level. The purpose of the meeting is to hold discussion and obtain input from the Chairs on the following policy topics: cruise ships, marine reserves, aquaculture and, if time allows, bioprospecting. The Chairs will also receive updates on the following items: reauthorization of the National Marine Sanctuaries Act, NMSP Strategic Plan, NMSP policy topics discussed during 2004 meeting, NMSP maritime heritage activities, and NMSP telepresence activities. The meeting will be open to the public. Opportunities for public comment will be provided at 8:45 a.m. and 4 p.m. on a first-come, first-serve basis. The Chairs will provide this advice only during the meeting announced by this notice, and will not become a permanent national advisory body.

Authority: 16 U.S.C. 1431 *et seq.*

(Federal Domestic Assistance Catalog Number 11.429 Marine Sanctuary Program.)

Daniel J. Basta,

Director, National Marine Sanctuary Program, National Ocean Services, National Oceanic and Atmospheric Administration.

[FR Doc. 04–27741 Filed 12–17–04; 8:45 am]

BILLING CODE 3510–NK–M

COMMITTEE FOR THE IMPLEMENTATION OF TEXTILE AGREEMENTS

Request for Public Comments on Commercial Availability Petition Under the United States—Caribbean Basin Trade Partnership Act (CBTPA)

December 16, 2004.

AGENCY: Committee for the Implementation of Textile Agreements (CITA).

ACTION: Request for public comments concerning a petition for a determination that a certain woven fabric cannot be supplied by the domestic industry in commercial quantities in a timely manner under the CBTPA.

FOR FURTHER INFORMATION CONTACT: Martin J. Walsh, International Trade Specialist, Office of Textiles and Apparel, U.S. Department of Commerce, (202) 482–2818.

SUMMARY: On December 12, 2004, the Chairman of CITA received a petition from Sharretts, Paley, Carter & Blauvelt, P.C., on behalf of Fishman & Tobin, alleging that a certain woven fabric, of

the specifications detailed below, classified in the indicated subheadings of the Harmonized Tariff Schedule of the United States (HTSUS), cannot be supplied by the domestic industry in commercial quantities in a timely manner. The petitions request that boys' suits, trousers, and suit-type jackets or blazers, sizes 2T–20, of such fabrics assembled in one or more CBTPA beneficiary countries be eligible for preferential treatment under the CBTPA. CITA hereby solicits public comments on these petitions, in particular with regard to whether this fabric can be supplied by the domestic industry in commercial quantities in a timely manner. Comments must be submitted by January 4, 2005 to the Chairman, Committee for the Implementation of Textile Agreements, Room 3001, United States Department of Commerce, 14th and Constitution, NW., Washington, DC 20230.

SUPPLEMENTARY INFORMATION:

Authority: Section 213(b)(2)(A)(v)(II) of the CBERA, as added by Section 211(a) of the CBTPA; Section 6 of Executive Order No. 13191 of January 17, 2001.

Background

The CBTPA provides for quota- and duty-free treatment for qualifying textile and apparel products. Such treatment is generally limited to products manufactured from yarns or fabrics formed in the United States. The CBTPA also provides for quota- and duty-free treatment for apparel articles that are both cut (or knit-to-shape) and sewn or otherwise assembled in one or more CBTPA beneficiary countries from fabric or yarn that is not formed in the United States, if it has been determined that such fabric or yarn cannot be supplied by the domestic industry in commercial quantities in a timely manner. In Executive Order No. 13191, the President delegated to CITA the authority to determine whether yarns or fabrics cannot be supplied by the domestic industry in commercial quantities in a timely manner under the CBTPA and directed CITA to establish procedures to ensure appropriate public participation in any such determination. On March 6, 2001, CITA published procedures that it will follow in considering requests. (66 FR 13502).

On December 12, 2004, the Chairman of CITA received a petition on behalf of Fishman & Tobin alleging that a certain woven fabric, of the specifications detailed below, classified in the indicated HTSUS subheadings, cannot be supplied by the domestic industry in commercial quantities in a timely manner and requesting quota- and duty-free treatment under the CBTPA for boys' suits, trousers, and suit-type jackets or blazers, sizes 2T–20, that are cut and sewn in one or more CBTPA beneficiary countries from such fabrics.

Specifications

Fabric: Fancy polyester filament fabric.

HTS Subheading: 5407.53.20.20 & 5407.53.20.60.

Fiber Content: 100% Polyester.

Width: 58/60 inches.

Construction: Plain, twill and satin weaves, in combinations of 75 denier, 100 denier, 150 denier, and 300 denier yarn sizes, with mixes of 25% cationic/75% disperse, 50% cationic/50% disperse, and 100% cationic.

Dyeing: Containing at least three different yarns, each of which is dyed a different color.

CITA is soliciting public comments regarding these requests, particularly with respect to whether this fabric can be supplied by the domestic industry in commercial quantities in a timely manner. Also relevant is whether other fabrics that are supplied by the domestic industry in commercial quantities in a timely manner are substitutable for the fabric for purposes of the intended use. Comments must be received no later than January 4, 2005. Interested persons are invited to submit six copies of such comments or information to the Chairman, Committee for the Implementation of Textile Agreements, Room 3100, U.S. Department of Commerce, 14th and Constitution Avenue, NW., Washington, DC 20230.

If a comment alleges that this fabric can be supplied by the domestic industry in commercial quantities in a timely manner, CITA will closely review any supporting documentation, such as a signed statement by a manufacturer of the fabric stating that it produces the fabric that is the subject of the request, including the quantities that can be supplied and the time necessary to fill an order, as well as any relevant information regarding past production.

CITA will protect any business confidential information that is marked business confidential from disclosure to the full extent permitted by law. CITA will make available to the public non-confidential versions of the request and non-confidential versions of any public comments received with respect to a request in room 3100 in the Herbert Hoover Building, 14th and Constitution Avenue, NW., Washington, DC 20230. Persons submitting comments on a request are encouraged to include a non-confidential version and a non-confidential summary.

James C. Leonard, III,

Chairman, Committee for the Implementation of Textile Agreements.

[FR Doc. 04–27893 Filed 12–16–04; 2:15 pm]

BILLING CODE 3510–DS–P

DEPARTMENT OF DEFENSE

Office of the Secretary

Submission for OMB Review; Comment Request

ACTION: Notice.

The Department of Defense has submitted to OMB for clearance, the following proposal for collection of information under the provisions of the Paperwork Reduction Act (44 U.S.C. chapter 35).

DATES: Consideration will be given to all comments received by January 19, 2005.

Title, Form, and OMB Number: Base Realignment and Closure (BRAC) Military Base Reuse Status; DD Form 2740; OMB Control Number 0790–0003.

Type of Request: Extension.

Number of Respondents: 75.

Responses Per Respondent: 1.

Annual Responses: 75.

Average Burden Per Response: 1 hour.

Annual Burden Hours: 75.

Needs and Uses: The information collection requirement is necessary to evaluate and measure program performance through civilian job creation and type of redevelopment at former military installations. The respondents to the annual survey (formerly semi-annual) are the single points of contact at the local level responsible for overseeing redevelopment efforts. This data is collected to provide OEA accurate information regarding civilian reuse of former military bases, and thus information on the results of its grant-making. The collected information is incorporated into an Annual Report to Congress.

Affected Public: Business or other for-profit; Federal government; State, local or tribal government.

Frequency: Annually.

Respondent's Obligation: Voluntary.

OMB Desk Officer: Mr. Lewis Oleinick.

Written comments and recommendations on the proposed information collection should be sent to Mr. Oleinick at the Office of Management and Budget, Desk Officer for DoD, Room 10236, New Executive Office Building, Washington, DC 20503.

DOD Clearance Officer: Ms. Patricia Toppings.

Written requests for copies of the information collection proposal should be sent to Ms. Toppings., WHS/ESCD/Information Management Division, 1225 South Clark Street, Suite 504, Arlington, VA 22202–4326.

Dated: December 10, 2004.

Patricia L. Toppings,

Alternate OSD Federal Register Liaison Officer, Department of Defense.

[FR Doc. 04–27756 Filed 12–20–04; 8:45 am]

BILLING CODE 5001–06–M

DEPARTMENT OF DEFENSE

Office of the Secretary

Submission for OMB Review; Comment Request

ACTION: Notice.

The Department of Defense has submitted to OMB for clearance, the following proposal for collection of information under the provisions of the Paperwork Reduction Act (44 U.S.C. chapter 35).

DATES: Consideration will be given to all comments received by January 19, 2005.

Title and OMB Number: Defense Federal Acquisition Regulation Supplement (DFARS) Part 247, Transportation, and related clauses in DFARS 252.247; OMB Control Number 0704–0245.

Type of Request: Extension.

Number of Respondents: 60,400.

Response per Respondent: 8.

Annual Responses: 465,842.

Average Burden Per Response: 20 minutes (average).

Annual Burden Hours: 150,114.

Needs and Uses: DoD contracting officers use this information to verify that prospective contractors have adequate insurance prior to award of stevedoring contracts; to provide appropriate price adjustments to stevedoring contracts; and to assist the Maritime Administration in monitoring compliance with requirements for use of U.S.-flag vessels in accordance with the Cargo Preference Act of 1904 (10 U.S.C. 2631).

Affected Public: Business or other for-profit and not-for-profit institutions.

Frequency: On occasion.

Respondent's Obligation: Required to obtain or retain benefits.

OMB Desk Officer: Mr. Lewis Oleinick.

Written requests for copies of the information collection proposal should be sent to Mr. Oleinick at the Office of Management and Budget, Desk Officer for DoD, Room 10236, New Executive Office Building, Washington, DC 20503.

DOD Clearance Officer: Ms. Patricia Toppings.

Written requests for copies of the information collection proposal should be sent to Ms. Toppings, WHS/ESCD/Information Management Division, 1225 South Clark Street, Suite 504, Arlington, VA 22202–4326.

Dated: December 10, 2004.

Patricia L. Toppings,

Alternate OSD Federal Register Liaison Officer, Department of Defense.

[FR Doc. 04–27757 Filed 12–17–04; 8:45 am]

BILLING CODE 5001–06–M

DEPARTMENT OF DEFENSE

Office of the Secretary

Submission for OMB Review; Comment Request

ACTION: Notice.

The Department of Defense has submitted to OMB for clearance, the following proposal for collection of information under the provisions of the Paperwork Reduction Act (44 U.S.C. chapter 35).

DATES: Consideration will be given to all comments received by June 19, 2005.

Title, Form, and OMB Number: Militarily Critical Technical Data Agreement; DD Form 2345; OMB Control Number 0704–0207.

Type of Request: Extension.

Number of Respondents: 6,000.

Responses Per Respondent: 1,

Annual Responses: 6,000.

Average Burden Per Response: 20 minues.

Annual Burden Hours: 2,000.

Need and Uses: The information collection requirement is necessary as a basis for certifying enterprises or individuals to have access to DoD export-controlled militarily critical technical data subject to the provisions of 32 CFR Part 250. Enterprises and individuals that need access to unclassified DoD-controlled militarily critical technical data must certify on DD Form 2345, Militarily Critical Technical Data Agreement, that data will be used only in ways that will inhibit unauthorized access and maintain the protection afforded by U.S. export control laws. The information collection is disclosed only to the extent consistent with prudent business practices, current regulations, and statutory requirements and is so indicated on the Privacy Act Statement of DD Form 2345.

Affected Public: Business or other for-profit and not-for-profit institutions.

Frequency: On occasion.

Respondent's Obligation: Required to obtain or retain benefits.

OMB Desk Officer: Mr. Lewis Oleinick.

Written comments and recommendations on the proposed information collection should be sent to Mr. Oleinick at the Office of Management and Budget, Desk Officer for DoD, Room 10236, New Executive Office Building, Washington, DC 20503.

DOD Clearance Officer: Ms. Patricia Toppings.

Writen requests for copies of the information collection proposal should be sent to Ms. Toppings, WHS/ESCD/Information Management Division, 1225 South Clark Street, Suite 504, Arlington, VA 22202–4326.

Dated: December 10, 2004.

Patricia L. Toppings,

Alternate OSD Federal Register Liaison Officer, Department of Defense.

[FR Doc. 04–27758 Filed 12–17–04; 8:45 am]

BILLING CODE 5001–06–M

DEPARTMENT OF DEFENSE

GENERAL SERVICES ADMINISTRATION

NATIONAL AERONAUTICS AND SPACE ADMINISTRATION

[OMB Control No. 9000–0013]

Federal Acquisition Regulation; Information Collection; Cost or Pricing Data Requirements and Information Other Than Cost or Pricing Data

AGENCIES: Department of Defense (DOD), General Services Administration (GSA), and National Aeronautics and Space Administration (NASA).

ACTION: Notice of request for public comments regarding an extension to an existing OMB clearance (9000–0013).

SUMMARY: Under the provisions of the Paperwork Reduction Act of 1995 (44 U.S.C. Chapter 35), the Federal Acquisition Regulation (FAR) Secretariat will be submitting to the Office of Management and Budget (OMB) a request to review and approve an extension of a currently approved information collection requirement concerning cost or pricing data requirements and information other than cost or pricing data. The clearance currently expires on February 28, 2005.

Public comments are particularly invited on: Whether this collection of information is necessary for the proper performance of functions of the FAR, and whether it will have practical utility; whether our estimate of the

public burden of this collection of information is accurate, and based on valid assumptions and methodology; ways to enhance the quality, utility, and clarity of the information to be collected; and ways in which we can minimize the burden of the collection of information on those who are to respond, through the use of appropriate technological collection techniques or other forms of information technology.

DATES: Submit comments on or before February 18, 2005.

FOR FURTHER INFORMATION CONTACT: Jerry Olson, Contract Policy Division, GSA (202) 501–3221.

ADDRESSES: Submit comments regarding this burden estimate or any other aspect of this collection of information, including suggestions for reducing this burden to the General Services Administration, FAR Secretariat (VIR), 1800 F Street, NW, Room 4035, Washington, DC 20405.Please cite OMB Control No. 9000–0013, Cost or Pricing Data Requirements and Information Other Than Cost Pricing Data, in all correspondence.

A. Purpose

The Truth in Negotiations Act requires the Government to obtain certified cost or pricing data under certain circumstances. Contractors may request an exemption from this requirement under certain conditions and provide other information instead.

B. Annual Reporting Burden

Respondents: 33,332.
Responses Per Respondent: 6.
Total Responses:: 199,992.
Hours Per Response: 50.51.
Total Burden Hours: 10,101,684.
Obtaining Copies of Proposals: Requesters may obtain a copy of the information collection documents from the General Services Administration, FAR Secretariat (VIR), 1800 F Street, NW, Room 4035, Washington, DC 20405, telephone (202) 501–4755. Please cite OMB Control No. 9000–0013, Cost or Pricing Data Requirements and Information Other Than Cost Pricing Data, in all correspondence.

Dated: December 14, 2004

Laura Auletta

Director, Contract Policy Division.

[FR Doc. 04–27727 Filed 12–17–04; 8:45 am]

BILLING CODE 6820–EP–S

DEPARTMENT OF DEFENSE

Office of the Secretary

Defense Science Board

AGENCY: Department of Defense.

ACTION: Notice of Advisory Committee Meeting Cancellations.

SUMMARY: The Defense Science Board Task Force on Red Lessons Learned meeting scheduled for December 16–17, 2004, will not be held.

Dated: December 15, 2004.

Jeannette Owings-Ballard,

OSD Federal Register Liaison Officer, Department of Defense.

[FR Doc. 04–27755 Filed 12–17–04; 8:45 am]

BILLING CODE 5001–06–M

DEPARTMENT OF DEFENSE

Office of the Secretary

Privacy Act of 1974; System of Records

AGENCY: Office of the Secretary, DoD.

ACTION: Notice to add a system of records.

SUMMARY: The Office of the Secretary of Defense proposes to add a system of records to its inventory of record systems subject to the Privacy Act of 1974 (5 U.S.C. 552a), as amended.

DATES: The changes will be effective on January 19, 2005, unless comments are received that would result in a contrary determination.

ADDRESSES: Send comments to OSD Privacy Act Coordinator, Records Management Section, Washington Headquarters Services, 1155 Defense Pentagon, Washington, DC 20301–1155.

FOR FURTHER INFORMATION CONTACT: Ms. Juanita Irvin at (703) 601–4722, extension 110.

SUPPLEMENTARY INFORMATION: The Office of the Secretary of Defense notices for systems of records subject to the Privacy Act of 1974 (5 U.S.C. 552a), as amended, have been published in the **Federal Register** and are available from the address above.

The proposed systems reports, as required by 5 U.S.C. 552a(r) of the Privacy Act of 1974, as amended, were submitted on December 13, 2004, to the House Committee on Government Reforms, the Senate Committee on Governmental Affairs, and the Office of Management and Budget (OMB) pursuant to paragraph 4c of Appendix I to OMB Circular No. A–130, ''Federal Agency Responsibilities for Maintaining Records About Individuals,'' dated February 8, 1996 (February 20, 1996, 61 FR 6427).

Dated: December 14, 2004.

Jeannette Owings-Ballard,

OSD Federal Register Liaison Officer, Department of Defense.

DPR 31

SYSTEM NAME:

Personal Commercial Solicitation Evaluation.

SYSTEM LOCATION:

Department of Defense, Military Community and Family Policy, ATTN: Morale, Welfare and Recreation Policy Office, 241 18th Street, Suite 302, Arlington, VA 22202–3424.

CATEGORIES OF INDIVIDUALS COVERED BY THE SYSTEM:

Active duty service members and solicitors.

CATEGORIES OF RECORDS IN THE SYSTEM:

Name of sales representative and company; appointment information; conduct of sale representative; active duty service member's name, home and work phone number, unit address and e-mail.

AUTHORITY FOR MAINTENANCE OF THE SYSTEM:

5 U.S.C. 301, Departmental Regulation; 15 U.S.C. 1601, Congressional findings and declaration of purpose; and DoD Directive 1344.7, Personal Commercial Solicitation on DoD Installations.

PURPOSE(S):

The information is used to document the active duty service member's experience with the sales representatives. Service member responses ensure sales representatives conduct themselves fairly and in accordance with DoD Directive 1344.7. Information may be used as part of a case file in the event proceedings are considered necessary to deny or withdraw permission for the sales representative and/or the company to solicit on one or more military installations.

ROUTINE USES OF RECORDS MAINTAINED IN THE SYSTEM, INCLUDING CATEGORIES OF USERS AND THE PURPOSES OF SUCH USES:

In addition to those disclosures generally permitted under 5 U.S.C. 552a(b) of the Privacy Act, these records or information contained therein may specifically be disclosed outside the DoD as a routine use pursuant to 5 U.S.C. 552a(b)(3) as follows: The DoD ''Blanket Routine Uses'' set forth at the beginning of OSD's compilation of systems of records notices do not apply to this system.

POLICIES AND PRACTICES FOR STORING, RETRIEVING, ACCESSING, RETAINING, AND DISPOSING OF RECORDS IN THE SYSTEM:

STORAGE:

Paper in file folders.

RETRIEVABILITY:

Records are retrieved by the active duty service members' name and unit.

SAFEGUARDS:

Records are maintained in controlled areas accessible only to authorized personnel with a valid requirement and authorization to enter. Physical entry is restricted by use of combination numbered and cipher locks.

RETENTION AND DISPOSAL:

Permanent. Cut off and retire to the Washington National Records Center when superseded or obsolete.

SYSTEM MANAGER(S) AND ADDRESS:

Senior Program Analyst, Department of Defense, ATTN: Morale, Welfare and Recreation Policy Office, 241 18th Street, Suite 302, Arlington, VA 22202–3424.

NOTIFICATION PROCEDURE:

Individuals seeking to determine whether information about themselves is contained in this system should address written inquiries to the Office of the Under Secretary of Defense (Military Community and Family Policy), ATTN: Morale, Welfare and Recreation Policy Directorate, 1745 Jefferson Davis Highway, Suite 302, Arlington, VA 22202–3424.

Requests should include the individual's name, phone number, and address.

RECORD ACCESS PROCEDURES:

Individual seeking access to information about themselves should address written requests to the Office of the Under Secretary of Defense (Military Community and Family Policy), ATTN: Morale, Welfare and Recreation Policy Directorate, 1745 Jefferson Davis Highway, Suite 302, Arlington, VA 22202–3424.

Requests should include the individual's name, phone number, and address.

CONTESTING RECORD PROCEDURES:

The OSD rules for accessing records, for contesting contents and appealing initial agency determinations are published in OSD Administrative Instruction 81; 32 CFR part 311; or may be obtained from the system manager.

RECORD SOURCE CATEGORIES:

Active duty service member.

EXEMPTIONS CLAIMED FOR THE SYSTEM:

None.

[FR Doc. 04–27701 Filed 12–17–04; 8:45 am]

BILLING CODE 5001–06–M

DEPARTMENT OF DEFENSE

Department of the Navy

Privacy Act of 1974; System of Records

AGENCY: Department of the Navy.

ACTION: Notice to add a system of records.

SUMMARY: The Department of the Navy proposes to add a system of records notice to its inventory of record systems subject to the Privacy Act of 1974 (5 U.S.C. 552a), as amended.

DATES: This action will be effective on January 19, 2005, unless comments are received that would result in a contrary determination.

ADDRESSES: Send comments to Department of the Navy, PA/FOIA Policy Branch, Chief of Naval Operations, DNS10, (DNS–36), 2000 Navy Pentagon, Washington, DC 20350–2000.

FOR FURTHER INFORMATION CONTACT: Mrs. Doris Lama at (202) 685–6545 or DSN 325–6545.

SUPPLEMENTARY INFORMATION: The Department of the Navy's record system notices for records systems subject to the Privacy Act of 1974 (5 U.S.C. 552a), as amended, have been published in the **Federal Register** and are available from the address above.

The proposed system report, as required by 5 U.S.C. 552a(r) of the Privacy Act, was submitted on December 13, 2004, to the House Committee on Government Reform, the Senate Committee on Governmental Affairs, and the Office of Management and Budget (OMB) pursuant to paragraph 4c of Appendix I to OMB Circular No. A–130, 'Federal Agency Responsibilities for Maintaining Records About Individuals,' dated February 8, 1996 (61 FR 6427, February 20, 1996).

Dated: December 14, 2004.

Jeannette Owings-Ballard,

OSD Federal Register Liaison Officer, Department of Defense.

NM07010–1

SYSTEM NAME:

DON Non-Appropriated Funds Standard Payroll System.

SYSTEM LOCATION:

Non-appropriated activities in the Department of the Navy. Official mailing addresses are published in the Standard Navy Distribution List that is available at *http://neds.daps.dla.mil/sndl.htm.*

CATEGORIES OF INDIVIDUAL'S COVERED BY THE SYSTEM:

Department of the Navy non-appropriated fund employees.

CATEGORIES OF RECORDS IN THE SYSTEM:

Time and attendance records; personal payroll data listings; correspondence; combined payroll checks and employee leave and earnings statements; Federal, state, and city tax reports and or tapes; and individual pay and leave records.

AUTHORITY FOR MAINTENANCE OF THE SYSTEM:

10 U.S.C. 5013, Secretary of the Navy and E.O. 9397 (SSN).

PURPOSE(S):

To compute employees' pay entitlements and deductions and issue payroll checks for amounts due; to withhold amounts due for Federal, state, and city taxes, to remit withholdings to the taxing authorities, and to report earnings and tax collections; and upon request of employees, to deduct specified amounts from earnings for charity, union dues, and for allotments to financial organizations.

ROUTINE USES OF RECORDS MAINTAINED IN THE SYSTEM, INCLUDING CATEGORIES OF USERS AND THE PURPOSES OF SUCH USES:

In addition to those disclosures generally permitted under 5 U.S.C. 552a(b) of the Privacy Act, these records or information contained therein may specifically be disclosed outside the DoD as a routine use pursuant to 5 U.S.C. 552a(b)(3) as follows:

To the Internal Revenue Service to record wages earned, tax withheld, and social security information.

To state revenue departments to credit employee's state withholding.

To state employment agencies which require wage information to determine eligibility of unemployment compensation benefits of former employees.

To city revenue departments of appropriate cities to credit employees for city tax withheld.

The DoD 'Blanket Routine Uses' published at the beginning of the Navy's compilation of systems of records notices apply to this system.

DISCLOSURE TO CONSUMER REPORTING AGENCIES:

Disclosures pursuant to 5 U.S.C. 552a(b)(12) may be made from this system to 'consumer reporting agencies' as defined in the Fair Credit Reporting

Act (14 U.S.C. 1681a(f)) or the Federal Claims Collection Act of 1966 (31 U.S.C. 3701(a)(3)). The purpose of this disclosure is to aid in the collection of outstanding debts owed to the Federal government, typically to provide an incentive for debtors to repay delinquent Federal government debts by making these debts part of their credit records.

The disclosure is limited to information necessary to establish the identity of the individual, including name, address, and taxpayer identification number (Social Security Number), the amount, status, and history of the claim; and the agency or program under which the claim arose for the sole purpose of allowing the consumer reporting agency to prepare a commercial credit report.

POLICIES AND PRACTICES FOR STORING, RETRIEVING, ACCESSING, RETAINING, AND DISPOSING OF RECORDS IN THE SYSTEM:

STORAGE:

Paper records and on automated storage media.

RETRIEVABILITY:

Name and/or Social Security Number (SSN).

SAFEGUARDS:

Records are accessed by person(s) responsible for servicing the record system in performance of their official duties and who are properly screened and cleared for need-to-know. Records are stored in security file containers/cabinets and safes, protected by guards, and controlled by personnel screening, visitor registers and computer system software.

RETENTION AND DISPOSAL:

Paper records are destroyed 10 years after employment is terminated. Electronic records are maintained and purged by payroll contractor and destroyed in the 7th year after origination.

SYSTEM MANAGER(S) AND ADDRESS:

Policy Official: Commander, Navy Installations Millington Detachment, 5720 Integrity Drive, Millington, TN 38055–6500.

Record Holder: Non-appropriated fund activities in the Department of the Navy. Official mailing addresses are published in the Standard Navy Distribution List that is available at *http://neds.daps.dla.mil/sandl.htm.*

NOTIFICATION PROCEDURE:

Individuals seeking to determine whether this system of records contains information about themselves should address written inquiries to the commanding officer of the activity in question. Official mailing addresses are published in the Standard Navy distribution List that is available at *http://neds.daps.dla.mil/sndl.htm.*

The request should include full name, Social Security Number, address of the individual concerned and should be signed.

RECORD ACCESS PROCEDURES:

Individuals seeking access to information about themselves contained in this system should address written inquiries to the commanding officer of the activity in question. Official mailing addresses are published in the standard Navy Distribution List that is available at *http://neds.daps.dla.mil/sndl.htm.*

The request should include full name, Social Security Number, address of the individual concerned and should be signed.

CONTESTING RECORD PROCEDURES:

The Navy's rules for accessing records, and for contesting contents and appealing initial agency determinations are published in Secretary of the Navy Instruction 5211.5; 32 CFR part 701; or may be obtained from the system manager.

RECORD SOURCE CATEGORIES:

Individual; employee's supervisor; local Morale, Welfare, and Recreation (MWR) Activities' Personnel Offices; Internal Revenue Service; credit bureaus; Commander, Navy Installations Command, Millington Detachment; and contractors who process payroll Navy MWR activities.

EXEMPTIONS CLAIMED FOR THE SYSTEM:

None.

[FR Doc. 04–27700 Filed 12–17–04; 8:45 am]

BILLING CODE 5001–06–M

DELAWARE RIVER BASIN COMMISSION

Notice of Public Hearing; Proposal To Amend the Administrative Procedure and Fee Schedule for the Renewal of Projects Under Section 3.8 and Article 10 of the Delaware River Basin Compact

AGENCY: Delaware River Basin Commission.

ACTION: Notice of public hearing.

SUMMARY: The Delaware River Basin Commission (''Commission'') will hold a public hearing to receive comments on a proposed amendment to the Commission's administrative procedure and fee schedule for the renewal of project approvals under Section 3.8 and Article 10 of the Delaware River Basin Compact.

DATES: The public hearing will be held during the Commission's regularly scheduled business meeting on January 19, 2005 at 1:30 p.m. Persons wishing to testify at the hearing are asked to register in advance with the Commission by phoning 609–883–9500, extension 224. Submission of written comments by January 14, 2005 would be appreciated, but written comments will be accepted through the close of the public hearing on Wednesday, January 19, 2005.

ADDRESSES: The public hearing will be held in the Goddard Room of the Commission's office building at 25 State Police Drive in West Trenton, New Jersey. Written comments should be addressed to the Commission Secretary as follows: by e-mail to *paula.schmitt@drbc.state.nj.us*; by fax to 609–883–9522; by U.S. Mail to Commission Secretary, DRBC, P.O. Box 7360, West Trenton, NJ 08628–0360; or by overnight mail to Commission Secretary, DRBC, 25 State Police Drive, West Trenton, NJ 08628–0360.

FOR FURTHER INFORMATION CONTACT: The full text of the proposed amendment is posted on the Commission's Web site, *http://www.drbc.net.* Please contact Commission Secretary Pamela Bush, 609–883–9500 ext. 203, with questions about the proposed action.

SUPPLEMENTARY INFORMATION: The Commission's fee schedule for the review of projects under Section 3.8 and Article 10 of the Delaware River Basin Compact is set forth in Resolution No. 2003–14, duly adopted by the Commission on June 26, 2003. The proposed amendments to the schedule would add provisions (a) for the administrative continuance of dockets and permits (collectively, ''approvals'') pending Commission action on renewal applications that are timely submitted; and (b) imposition of a fee of $1,000, in addition to the ordinary review fee, for the review of renewal applications not submitted in a timely fashion. In accordance with the proposed amendment, a docket holder or permittee whose approval has been administratively continued will not be subject to penalties for operating without a docket or permit during the period between expiration of the approval and Commission action on an application for renewal, provided that the docket holder or permittee will be responsible for violations of the terms and conditions of its approval to the same extent as if the approval had been renewed prior to its expiration.

In order to phase in the new program, the proposed rule sets forth one timeline for approvals that expire before October 1, 2005 and another for approvals that expire on or after October 1, 2005.

Approvals expiring before October 1, 2005 are proposed to be administratively continued pending issuance of a docket renewal when the docket holder or permittee submits a complete application within 90 calendar days after receipt of a written notice from the Executive Director or by September 30, 2005, whichever is earlier. The Executive Director may extend the deadline for good cause shown in the event a substantially complete application, along with the full fee, is submitted by the deadline. The fee of $1,000, payable in addition to the ordinary fee, is proposed to be charged for renewal applications submitted after September 30, 2005.

Approvals expiring after September 30, 2005 are proposed to be administratively continued pending issuance of a docket renewal when the docket holder or permittee submits a complete application at least 120 calendar days in advance of the expiration date. If the approval establishes a different application submission date, the docket or permit is controlling. Again, the Executive Director may extend the deadline for good cause shown, in the event a substantially complete application, along with the full fee, is submitted by the deadline. A fee of $1,000 above the ordinary fee is proposed to be charged for renewal applications submitted fewer than 120 calendar days before the approval's expiration date.

The amendment provides for the Executive Director to implement procedures to furnish written notice to docket holders and permittees in advance of their approval expiration dates, reminding them to file a timely renewal application. However, failure of the Executive Director to send such notice or lack of receipt of the notice by the docket holder or permittee will not relieve the docket holder or permittee of any obligation or condition or create any defense.

Dated: December 13, 2004.

Pamela M. Bush,

Commission Secretary.

[FR Doc. 04–27703 Filed 12–17–04; 8:45 am]

BILLING CODE 6360–01–P

DELAWARE RIVER BASIN COMMISSION

Notice of Proposed Rulemaking: Proposed Amendments to the Comprehensive Plan and Water Code Relating to the Coordinated Operation of Lower Basin and Hydroelectric Reservoirs During a Basinwide Drought

AGENCY: Delaware River Basin Commission.

ACTION: Notice of proposed rulemaking.

SUMMARY: The Delaware River Basin Commission (''Commission'' or ''DRBC'') will hold a public hearing to receive comments on proposed amendments to Section 2.5.5 of the Water Code, relating to the Coordinated Operation of Lower Basin and Hydroelectric Reservoirs During a Basinwide Drought. The Commission proposes to amend and codify changes to the Comprehensive Plan and Water Code effected by Resolution No. 2002–33, approved in November 2002 by the Commission and the parties to the U.S. Supreme Court Decree in *New Jersey* v. *New York*, 347 U.S. 995 (1954) (''Decree Parties''). The amendments are for purposes of clarification and accuracy and to better ensure that the benefits of the changes effected by Resolution No. 2002–33 are achieved without compromising habitat protection goals. Resolution No. 2002–33, which was not codified, in part amended the Comprehensive Plan and Water Code relating to the utilization of Lake Wallenpaupack during drought watch, drought warning and drought operations. The proposed changes are as follows: First, numbered paragraph 1 of Resolution No. 2002–33 provides that ''any and all provisions pertaining to the operation of Lake Wallenpaupack during basinwide drought warning also apply to basinwide drought watch as temporarily defined by the Commission in Docket No. D–77–20 CP.'' The proposed amendment adds the parenthetical ''(Revision 7 and following)'' at the end of this sentence to make clear that the most current applicable revision of Docket No. D–77–20 CP is intended to apply. Second, the inclusion of the term ''drought watch'' in brackets following every mention of ''drought warning'' in the November 2002 amendments is proposed to be deleted, because the Commission makes clear in numbered Paragraph 1 of the Resolution that provisions in Section 2.5.5 of the Water Code pertaining to the operation of Lake Wallenpaupack during drought warning also are intended to apply to drought watch as defined by Docket No. D–77–20 CP (Revision 7 and following). Third, throughout the language added by Resolution No. 2002–33, the terms ''drought conditions'' and ''drought warning conditions'' are replaced by ''drought operations'' and ''drought warning operations,'' respectively, to more accurately reflect the fact that the reservoir management activities described are triggered by a set of reservoir drought operating rules established by the Commission and the Decree Parties, rather than by hydrologic conditions. Fourth, the November 2002 amendments inserted language at Section 2.5.5 of the Water Code stating that ''[d]uring 'drought' and 'drought warning' operations * * *, ''the power companies shall release water only in accordance with Commission direction.'' This statement is proposed to be changed to reflect the Commission's intention that ''[d]uring 'drought' and 'drought warning' operations as defined in Figure 1 of Section 2.5.3.A. of the Water Code, releases from Lake Wallenpaupack shall be made only in accordance with Commission direction.'' In a related amendment, a new sentence is proposed to be added to Section 2.5.5 addressing operation of the Mongaup reservoir system by the Commission, which may take place only under more limited circumstances. The proposed provision reads, ''After issuance of a Conservation Order by the Commission, power generation releases from the Mongaup reservoir system shall be made only in accordance with Commission direction.'' This statement restores the rule governing drought operation of the Mongaup system reservoirs to the rule in effect before the November 2002 amendments. Fifth, the Commission proposes to add a clause providing that when it directs releases from Lake Wallenpaupack during drought watch (including warning) and drought operations, it must give consideration to any flow and temperature targets established by the Commission and the Decree Parties in the upper Delaware River and in the West Branch Delaware, East Branch Delaware, and Neversink rivers for the protection of the cold water fisheries in these streams.

DATES: The public hearing will be held during the Commission's regularly scheduled business meeting on January 19, 2005 at 1:30 p.m. Persons wishing to testify at the hearing are asked to register in advance with the Commission by phoning 609–883–9500, ext. 224. Submission of written comments by January 14, 2005 would be appreciated, but written comments will

be accepted through the close of the public hearing on Wednesday, January 19, 2005.

ADDRESSES: The public hearing will be held in the Goddard Room of the Commission's office building at 25 State Police Drive in West Trenton, New Jersey. Written comments should be addressed to the Commission Secretary as follows: by e-mail to *paula.schmitt@drbc.state.nj.us*; by fax to 609–883–9522; by U.S. Mail to Commission Secretary, DRBC, P.O. Box 7360, West Trenton, NJ 08628–0360; or by overnight mail to Commission Secretary, DRBC, 25 State Police Drive, West Trenton, NJ 08628–0360.

FOR FURTHER INFORMATION CONTACT: The full text of the proposed resolution, the text of Resolution No. 2002–33, and the text of the sections of the Water Code as amended by both Resolution No. 2002–33 and the proposed resolution, are posted on the Commission's Web site, *http://www.drbc.net.* Please contact Commission Secretary Pamela Bush, 609–883–9500 ext. 203, with questions about the proposed action.

Dated: December 13, 2004.

Pamela M. Bush,

Commission Secretary.

[FR Doc. 04–27704 Filed 12–17–04; 8:45 am]

BILLING CODE 6360–01–P

DEPARTMENT OF EDUCATION

Notice of Proposed Information Collection Requests

AGENCY: Department of Education.

SUMMARY: The Leader, Information Management Case Services Team, Regulatory Information Management Services, Office of the Chief Information Officer, invites comments on the proposed information collection requests as required by the Paperwork Reduction Act of 1995.

DATES: Interested persons are invited to submit comments on or before February 18, 2005.

SUPPLEMENTARY INFORMATION: Section 3506 of the Paperwork Reduction Act of 1995 (44 U.S.C. Chapter 35) requires that the Office of Management and Budget (OMB) provide interested Federal agencies and the public an early opportunity to comment on information collection requests. OMB may amend or waive the requirement for public consultation to the extent that public participation in the approval process would defeat the purpose of the information collection, violate State or Federal law, or substantially interfere with any agency's ability to perform its statutory obligations. The Leader, Information Management Case Services Team, Regulatory Information Management Services, Office of the Chief Information Officer, publishes that notice containing proposed information collection requests prior to submission of these requests to OMB. Each proposed information collection, grouped by office, contains the following: (1) Type of review requested, *e.g.* new, revision, extension, existing or reinstatement; (2) title; (3) summary of the collection; (4) description of the need for, and proposed use of, the information; (5) respondents and frequency of collection; and (6) reporting and/or recordkeeping burden. OMB invites public comment.

The Department of Education is especially interested in public comment addressing the following issues: (1) Is this collection necessary to the proper functions of the Department; (2) will this information be processed and used in a timely manner; (3) is the estimate of burden accurate; (4) how might the Department enhance the quality, utility, and clarity of the information to be collected; and (5) how might the Department minimize the burden of this collection on the respondents, including through the use of information technology.

Dated: December 14, 2004.

Angela C. Arrington,

Leader, Information Management Case Services Team, Regulatory Information Management Services, Office of the Chief Information Officer.

Office of Special Education and Rehabilitative Services

Type of Review: Reinstatement.

Title: OSERS Peer Review Data Form.

Frequency: Biennially.

Affected Public: Individuals or household.

Reporting and Recordkeeping Hour Burden: Responses—2,500. *Burden Hours*—1,250.

Abstract: OSERS Peer Review Data Form will be used to evaluate applications submitted under Part D of the Individuals with Disabilities Education Improvement Act (IDEIA, H.R. 1350); the law indicates that ''peer review panels shall include, to the extent practicable, parents of children with disabilities, individuals with disabilities, and persons from diverse backgrounds.''

Requests for copies of the proposed information collection request may be accessed from *http://edicsweb.ed.gov,* by selecting the ''Browse Pending Collections'' link and by clicking on link number 2650. When you access the information collection, click on ''Download Attachments'' to view. Written requests for information should be addressed to U.S. Department of Education, 400 Maryland Avenue, SW., Potomac Center, 9th Floor, Washington, DC 20202–4700. Requests may also be electronically mailed to the Internet address *OCIO_RIMG@ed.gov* or faxed to (202) 245–6621. Please specify the complete title of the information collection when making your request.

Comments regarding burden and/or the collection activity requirements should be directed to Sheila Carey at her e-mail address *Sheila.Carey@ed.gov.* Individuals who use a telecommunications device for the dear (TDD) may call the Federal Information Relay Service (FIRS) at 1–800–877–8339.

[FR Doc. 04–27726 Filed 12–17–04; 8:45 am]

BILLING CODE 4000–01–M

DEPARTMENT OF EDUCATION

Regional Advisory Committees

AGENCY: Regional Advisory Committees, Office of Elementary and Secondary Education, ED.

ACTION: Notice of real-time online conference meetings.

SUMMARY: This notice sets forth the schedule and agendas of forthcoming live, real-time online conferencing meetings of each of the 10 Regional Advisory Committees (RACs). Notice of RAC meetings is required under Section 10(a)(2) of the Federal Advisory Committee Act and is intended to notify the public of their opportunity to observe the meeting proceedings and to submit comment.

Meeting Format: All meetings will be conducted via online conference and will be available to the public online.

Meeting Purposes (Agendas): Each RAC will conduct three, 2-hour meetings to deliberate on findings and prepare their region's education needs assessment report:

Meeting 1—The RACs will: (1) Review input received from stakeholders and other relevant information and, based on the information received, deliberate about the critical education needs of State and school district policymakers and practitioners in the region that, if met, would help them to improve student achievement and meet the purposes of the No Child Left Behind Act, and (2) assess the extent of current resources and technical assistance opportunities available in the region to meet those needs.

Meeting 2—The Racs will deliberate about input received from stakeholders

and other relevant information and make recommendations on the types and approaches for technical assistance the Department of Education might undertake to address the identified education needs of the region.

Meeting 3—RAC members will meet to deliberate on and finalize the education needs assessment report for their region.

Meeting Schedules: (Note that all times are given in eastern standard time (e.s.t.), except for the Pacific Region.)

Appalachia (Regional Advisory Committee meetings are:
- Friday, January 7, 2005, 9 a.m.–11 a.m. e.s.t.
- Wednesday, February 9, 2005, 9 a.m.–11 a.m. e.s.t.
- Wednesday, March 9, 2005, 9 a.m.–11 a.m. e.s.t.

Mid-Atlantic Regional Advisory Committee Meetings are:
- Tuesday, January 4, 2005, 4 p.m.–6 p.m. e.s.t.
- Tuesday, February 8, 2005, 4 p.m.–6 p.m. e.s.t.
- Tuesday, March 8, 2005, 4 p.m.–6 p.m. e.s.t.

Mid Continent Regional Advisory Committee meetings are:
- Tuesday, January 4, 2005, 3 p.m.–5 p.m. e.s.t.
- Thursday, February 10, 2005, 3 p.m.–5 p.m. e.s.t.
- Thursday, March 10, 2005, 3 p.m.–5 p.m. e.s.t.

North Central Regional Advisory Committee meetings are:
- Wednesday, January 5, 2005, 9 a.m.–4 p.m. e.s.t.
- Tuesday, February 8, 2005, 10 a.m.–12 p.m. e.s.t.
- Thursday, March 10, 2005, 9 a.m.–11 a.m. e.s.t.

Northeast Regional Advisory Committee Meetings are:
- Tuesday, January 4, 2005, 4–6 p.m., e.s.t.
- Thursday, February 10, 2005, 4–6 p.m., e.s.t.
- Thursday, March 10, 2005, 4–6 p.m., e.s.t.

Northwest Regional Advisory Committee meetings are:
- Tuesday, January 4, 2005, 1–3 p.m., e.s.t.
- Wednesday, February 9, 2005, 1–3 p.m., e.s.t.
- Tuesday, March 8, 2005, 2:30–4:30 p.m., e.s.t.

Southeast Regional Advisory Committee Meetings are:
- Friday, January 7, 2005, 10 a.m.–12 p.m., e.s.t.
- Tuesday, February 8, 2005, 2–4 p.m., e.s.t.
- Friday, March 11, 2005, 2–4 p.m., e.s.t.

Southwest Regional Advisory Committee Meetings are:
- Wednesday, January 5, 2005, 3–5 p.m., e.s.t.
- Thursday, February 10, 2005, 3–5 p.m., e.s.t.
- Thursday, March 10, 2005, 3–5 p.m., e.s.t.

West Regional Advisory Committee Meetings are:
- Tuesday, January 4, 2005, 10 a.m.–12 p.m., e.s.t.
- Friday, February 11, 2005, 3–5 p.m., e.s.t.
- Thursday, March 3, 2005, 10 a.m.–12 p.m., e.s.t.

Pacific Regional Advisory Committee Meetings are:
- Wednesday, January 5, 2005, 6–8 p.m., e.s.t. (1 p.m., h.s.t./12 p.m., s.s.t. and Thursday, January 6, 2005, 11 a.m. Marshall Islands Time/9 a.m., Guam/FSM/CNMI Time, 8 a.m. Palau Time)
- Wednesday, February 9, 2005, 7–9 p.m., e.s.t. (2 p.m. h.s.t./1 p.m. s.s.t. and Thursday, February 10, 2005, 12 p.m., Marshall Islands Time/10 a.m., Guam/FSM/CNMI Time, 9 a.m., Palau Time)
- Wednesday, March 9, 2005, 7–9 p.m., e.s.t. (2 p.m., h.s.t./1 p.m., s.s.t. and Thursday, March 10, 2005, 12 p.m., Marshall Islands Time/10 a.m., Guam/FSM/CNMI Time, 9 a.m., Palau Time).

FOR FURTHER INFORMATION CONTACT: Enid Simmons, (202) 708–9499 or at *enid.simmons@ed.gov.*

SUPPLEMENTARY INFORMATION: The Regional Advisory Committees are established under section 206 of the Educational Technical Assistance Act of 2002, (20 U.S.C. 9605). The RACs are to advise the Secretary by (1) conducting an educational needs assessment of each region described in section 174(b) of the Education Sciences Reform Act of 2002; and (2) submitting reports for each region based on the regional assessments no later than 4 months after the committees are first convened.

The composition of each geographic region is as follows:

Appalachian Region: Kentucky, Tennessee, Virginia, and West Virginia.

Mid-Atlantic Region: Delaware, Maryland, New Jersey, Pennsylvania, Washington, DC.

Mid-Continent Region: Colorado, Kansas, Missouri, Nebraska, North Dakota, South Dakota, and Wyoming.

North Central Region: Illinois, Indiana, Iowa, Michigan, Minnesota, Ohio, and Wisconsin.

Northeast & Islands Region: Connecticut, Maine, Massachusetts, New Hampshire, New York, Rhode Island, Vermont; Puerto Rico, and the Virgin Islands.

Northwest Region: Alaska, Idaho, Montana, Oregon, and Washington.

Southeast Region: Alabama, Florida, Georgia, Mississippi, North Carolina and South Carolina.

Southwest Region: Arkansas, Louisiana, New Mexico, Oklahoma, and Texas.

West Region: Arizona, California, Nevada, and Utah.

Pacific Region: Hawaii, American Samoa, Commonwealth of Northern Mariana Islands, Federal States of Micronesia, Guam, the Republic of Palau, and the Republic of Marshall Islands.

The Public may listen to the proceedings of all meetings via live, real-time online conferencing. Pre-registration for each online conference is required. The public may register for an online meeting through the Regional Advisory Committee Web site at *http://www.rac-ed.org.* Registration for each meeting will be open two weeks prior to the scheduled date time of the meeting. The number of public registrations for each meeting will be limited due to cost considerations. Registration will be accepted on a first-come, first-served basis up to the limits of the space available. Individuals who will need special accommodations to view meeting proceedings online (*i.e.*, interpreting services, assistive listening devices, materials in alternative format) should notify Georgette Joyner at The CNA Corporation by no later than 10 days prior to the meeting. We will attempt to meet requests after this date, but cannot guarantee availability of the requested accommodation.

The public may listen to a recording of the proceedings of each RAC meeting over the Web at the RAC Web site: *http://www.rac-ed.org* within fourteen days of the meeting. Minutes of each meeting also will be available to the public online *http://www.rac-ed.org* within fourteen days of the meeting and for public inspection at the office of Georgette Joyner, The CNA Corporation, 4825 Mark Center Drive, Alexandria, VA 22311 between the hours of 9 a.m. to 5 p.m.

Dated: December 15, 2004.

Raymond Simon,

Assistant Secretary, OESE.

[FR Doc. 04–27842 Filed 12–17–04; 8:45 am]

BILLING CODE 4000–01–M

DEPARTMENT OF ENERGY

Federal Energy Regulatory Commission

[Docket No. RP02–335–004]

ANR Pipeline Company; Notice of Compliance Filing

December 13, 2004.

Take notice that, on December 3, 2004, ANR Pipeline Company (ANR) tendered for filing a compliance filing pursuant to the Commission's November 3, 2004 Order on Initial Decision in Docket No. RP02–335–002.

ANR states that copies of the filing were served on parties on the official service list in the above-captioned proceeding.

Any person desiring to protest this filing must file in accordance with Rule 211 of the Commission's Rules of Practice and Procedure (18 CFR 385.211). Protests to this filing will be considered by the Commission in determining the appropriate action to be taken, but will not serve to make protestants parties to the proceeding. Such protests must be filed in accordance with the provisions of Section 154.210 of the Commission's regulations (18 CFR 154.210). Anyone filing a protest must serve a copy of that document on all the parties to the proceeding.

The Commission encourages electronic submission of protests in lieu of paper using the ''eFiling'' link at *http://www.ferc.gov.* Persons unable to file electronically should submit an original and 14 copies of the protest to the Federal Energy Regulatory Commission, 888 First Street, NE., Washington, DC 20426.

This filing is accessible on-line at *http://www.ferc.gov,* using the ''eLibrary'' link and is available for review in the Commission's Public Reference Room in Washington, DC. There is an ''eSubscription'' link on the Web site that enables subscribers to receive email notification when a document is added to a subscribed docket(s). For assistance with any FERC Online service, please e-mail *FERCOnlineSupport@ferc.gov,* or call (866) 208–3676 (toll free). For TTY, call (202) 502–8659.

Magalie R. Salas,

Secretary.

[FR Doc. E4–3716 Filed 12–17–04; 8:45 am]

BILLING CODE 6717–01–P

DEPARTMENT OF ENERGY

Federal Energy Regulatory Commission

[Docket Nos. ER05–34–000, ER05–35–000, ER05–36–000, and ER05–37–000]

Dominion Energy New England, Inc., Dominion Energy Salem Harbor, LLC, Dominion Energy Brayton Point, LLC, and Dominion Energy Manchester Street, Inc.; Notice of Issuance of Order

December 13, 2004.

Dominion Energy New England, Inc., Dominion Energy Salem Harbor, LLC, Dominion Energy Brayton Point, LLC, and Dominion Energy Manchester Street, Inc. (collectively, the Applicants) filed applications for market-based rate authority, with accompanying tariffs. The proposed tariffs provide for wholesale sales of energy, capacity, and ancillary services at market-based rates. The Applicants also requested waiver of various Commission regulations. In particular, the Applicants requested that the Commission grant blanket approval under 18 CFR part 34 of all future issuances of securities and assumptions of liability by the Applicants.

On December 10, 2004, the Commission granted the request for blanket approval under part 34, subject to the following:

[A]ny person desiring to be heard or to protest the blanket approval of issuances of securities or assumptions of liability by the Applicants should file a motion to intervene or protest with the Federal Energy Regulatory Commission, 888 First Street, NE., Washington, DC 20426, in accordance with Rules 211 and 214 of the Commission's Rules of Practice and Procedure. 18 CFR 385.211, 385.214 (2004).

Dominion Energy New England, Inc. et al., 109 FERC ¶ 61, 262 (2004).

Notice is hereby given that the deadline for filing motions to intervene or protest, is January 10, 2005.

Absent a request to be heard in opposition by the deadline above, the Applicants are authorized to issue securities and assume obligations or liabilities as a guarantor, indorser, surety, or otherwise in respect of any security of another person; provided that such issuance or assumption is for some lawful object within the corporate purposes of the Applicants, compatible with the public interest, and is reasonably necessary or appropriate for such purposes.

The Commission reserves the right to require a further showing that neither public nor private interests will be adversely affected by continued approval of the Applicants issuances of securities or assumptions of liability.

Copies of the full text of the Commission's Order are available from the Commission's Public Reference Room, 888 First Street, NE., Washington, DC 20426. The Order may also be viewed on the Commission's Web site at *http://www.ferc.gov,* using the eLibrary link. Enter the docket number excluding the last three digits in the docket number filed to access the document. Comments, protests, and interventions may be filed electronically via the Internet in lieu of paper. *See* 18 CFR 385.2001(a)(1)(iii) and the instructions on the Commission's Web site under the ''e-Filing'' link. The Commission strongly encourages electronic filings.

Magalie R. Salas,

Secretary.

[FR Doc. E4–3718 Filed 12–17–04; 8:45 am]

BILLING CODE 6717–01–P

DEPARTMENT OF ENERGY

Federal Energy Regulatory Commission

[Docket Nos. EL00–95–100; EL00–95–012; EL00–98–086; and EL00–98–090]

San Diego Gas & Electric Company, Complainants v. Sellers of Energy and Ancillary Services Into Markets Operated by the California Independent System Operator and the California Power Exchange, Respondents; Investigation of Practices of the California Independent System Operator and the California Power Exchange; Notice of Filing

December 13, 2004.

On December 8, 2004, Ernst & Young (E&Y) filed a request for clarification regarding the calculation of the actual daily cost of gas for the additional fuel cost allowance, in the above-docketed proceedings. E&Y states that it was selected by the Commission as the independent auditor of the fuel cost allowance claims of sellers into the markets operated by the California Independent System Operator and the California Power Exchange.

Any person desiring to intervene or to protest this filing must file in accordance with Rules 211 and 214 of the Commission's Rules of Practice and Procedure (18 CFR 385.211, 385.214). Protests will be considered by the Commission in determining the appropriate action to be taken, but will not serve to make protestants parties to the proceeding. Any person wishing to

become a party must file a notice of intervention or motion to intervene, as appropriate. Such notices, motions, or protests must be filed on or before the comment date. Anyone filing a motion to intervene or protest must serve a copy of that document on the Applicant and all the parties in this proceeding.

The Commission encourages electronic submission of protests and interventions in lieu of paper using the ''eFiling'' link at *http://www.ferc.gov.* Persons unable to file electronically should submit an original and 14 copies of the protest or intervention to the Federal Energy Regulatory Commission, 888 First Street, NE., Washington, DC 20426.

This filing is accessible on-line at *http://www.ferc.gov,* using the ''eLibrary'' link and is available for review in the Commission's Public Reference Room in Washington, DC. There is an ''eSubscription'' link on the Web site that enables subscribers to receive e-mail notification when a document is added to a subscribed docket(s). For assistance with any FERC Online service, please e-mail *FERCOnlineSupport@ferc.gov,* or call (866) 208–3676 (toll free). For TTY, call (202) 502–8659.

Comment Date: 5 p.m. eastern time on December 20, 2004.

Magalie R. Salas,

Secretary.

[FR Doc. E4–3717 Filed 12–17–04; 8:45 am]

BILLING CODE 6717–01–P

DEPARTMENT OF ENERGY

Federal Energy Regulatory Commission

[Docket No. EC04–90–000, et al.]

Oregon Electric Utility Company, et al.; Electric Rate and Corporate Filings

December 10, 2004.

The following filings have been made with the Commission. The filings are listed in ascending order within each docket classification.

1. Oregon Electric Utility Company and Portland General Electric Company

[Docket No. EC04–90–000]

Take notice that on December 7, 2004, Portland General Electric Company (PGE) and Oregon Electric Utility Company, L.L.C. (collectively, Applicants) filed pursuant to section 203 of the Federal Power Act and part 33 of the Commission's regulations to amend their April 7, 2004, application for approval of the transfer of jurisdictional facilities. In particular, PGE states that the Applicants proposed to implement a Market Monitoring Plan simultaneously with the acquisition of PGE by Oregon Electric.

Comment Date: 5 p.m. Eastern Time on December 20, 2004.

2. California Independent System Operator Corporation

[Docket Nos. EL04–133–002 and ER04–1198–002 (Not Consolidated)]

Take notice that on December 6, 2004, the California Independent System Operator Corporation (ISO) submitted a filing in compliance with the Commission's order issued November 5, 2004, in Docket Nos. EL04–133–001 and ER04–1198–001, 109 FERC ¶ 61,153. The ISO states that this filing has been served on all parties on the official service lists in these dockets. In addition, the ISO also states that it has posted the filing on the ISO home page.

Comment Date: 5 p.m. Eastern Time on December 27, 2004.

3. City of Vernon, California

[Docket No. EL05–40–000]

Take notice that on December 7, 2004, the City of Vernon, California (Vernon) submitted for filing the annual update to its transmission revenue balancing account adjustment and amendments to Appendix I of its transmission owner tariff, to reflect that update and to note the status of Vernon's base transmission revenue requirement. Vernon also states that pursuant to paragraph 1.4 of the settlement approved in Docket No. EL02–103, 102 FERC ¶ 61,141 (Feb. 5, 2003), Vernon is providing to the California Independent System Operator Corporation (ISO) on a confidential basis for ISO review and verification, and submitting to the Commission on a confidential basis under 18 CFR 388.112, a volume of certain confidential data. Non-confidential, redacted versions of this data have also been filed with the Commission and served. Vernon requests an effective date of January 1, 2005.

Vernon states that copies of this filing have been served on the California Independent System Operator Corporation and the other Participating Transmission Owners, as well as on all individuals on the service list in Commission Docket No. EL04–34.

Comment Date: 5 p.m. Eastern Time on December 28, 2004.

4. Avista Corporation, Avista Energy, Inc., Spokane Energy, LLC, and Avista Turbine Power, Inc.

[Docket Nos. ER99–1435–008, ER96–2408–020, ER98–4336–009, and ER00–1814–003]

Take notice that on December 7, 2004, Avista Corporation d/b/a Avista Utilities, Avista Energy, Inc., Spokane Energy, LLC, and Avista Turbine Power, Inc. filed an amendment to their generation market power analysis in accordance with the Commission letter order issued November 16, 2004 in Docket Nos. ER99–1435–006, ER96–2408–019, ER98–4336–008 and ER00–1814–002.

Comment Date: 5 p.m. Eastern Time on December 28, 2004.

5. Hardee Power Partners Limited

[Docket Nos. ER99–2341–004 and ER05–247–001]

Take notice that, on December 6, 2004, Hardee Power Partners Limited (Hardee Power) submitted an amendment to the compliance filing it made in Docket Nos. ER99–2341–003 and ER05–247–000 on November 9, 2004. Hardee Power states that the amendment reflects ministerial modifications to Hardee Power's proposed revised market based rate attached to the November 9 filing by clarifying that it will not sell power to affiliated franchised public utilities without prior FERC approval and the effective date of the market behavior rules.

Hardee Power states that copies of the filing were served on parties on the official service list in the above-captioned proceeding.

Comment Date: 5 p.m. Eastern Time on December 27, 2004.

6. PPL Southwest Generation Holdings, LLC

[Docket Nos. ER01–1870–005 and ER01–1870–003]

Take notice that, on December 7, 2004, PPL Southwest Generation Holdings, LLC filed with the Commission a second supplement to its triennial updated market power analysis in compliance with the Commission's letter order issued November 16, 2004, in Docket Nos. ER01–1870–002 and ER01–1870–003.

PPL Southwest Generation Holdings, LLC states that copies of the filing were served on parties on the official service list.

Comment Date: 5 p.m. Eastern Time on December 28, 2004.

7. PJM Interconnection, L.L.C.

[Docket No. ER04–1218–001]

Take notice that on December 6, 2004, PJM Interconnection, L.L.C. (PJM), submitted for filing an amendment to its September 13, 2004, filing of an executed interconnection service agreement (ISA) among PJM, Pennsylvania Windfarms, Inc., and Pennsylvania Electric Company, a FirstEnergy Company, and a notice of

cancellation of an interconnection service agreement that has been superseded in response to the Commission's letter order issued November 5, 2004, *PJM Interconnection, L.L.C.,* in Docket No. ER04–1218–000.

PJM states that copies of this filing were served upon the parties to the agreement and the state regulatory commissions within the PJM region.

Comment Date: 5 p.m. Eastern Time on December 27, 2004.

6. Mystic I, LLC, Mystic Development, LLC, and Fore River Development, LLC

[Docket No. ER04–1265–002]

Take notice that, on December 8, 2004, Mystic I, LLC, Mystic Development, LLC and Fore River Development, LLC (collectively, the Project Companies) submitted a compliance filing pursuant to the Commission's unpublished letter order issued November 24, 2004 in Docket Nos. ER04–1265–000 and ER04–1265–001.

The Project Companies state that copies of the filing were served on parties on the official service list in the above-captioned proceeding.

Comment Date: 5 p.m. Eastern Time on December 29, 2004.

7. Upper Peninsula Power Company

[Docket No. ER05–89–000]

Take notice that on December 7, 2004, Upper Peninsula Power Company (UPPCO) requested that the Commission defer action on its October 28, 2004 filing in Docket No. ER05–89–000.

UPPCO states that copies of the filing were served upon the PJM Interconnection, L.L.C., the Midwest Independent Transmission System Operator, Inc. and the Michigan Public Service Commission.

Comment Date: 5 p.m. Eastern Time on December 28, 2004.

8. American Transmission Company, LLC

[Docket No. ER05–240–001]

Take notice that on December 7, 2004, American Transmission Company, LLC (ATCLLC) submitted an attachment A, amending page 1 of the agreement to its initial filing on November 18, 2004.

Comment Date: 5 p.m. Eastern Time on December 28, 2004.

9. Westbank Energy Capital, LLC

[Docket No. ER05–294–000]

Take notice that on December 6, 2004, Westbank Energy Capital, LLC (Westbank) petitioned the Commission for acceptance of Westbank Rate Schedule No.1; the granting of certain blanket approvals, including the authority to sell electricity at market-based rates; and the waiver of certain Commission regulations. Westbank states that it intends to engage in wholesale electric power and energy purchases and sales as a marketer. Westbank further states that it is not in the business of generating or transmitting electric power. Westbank indicates that it is a limited liability corporation formed under the laws of Texas, with its primary place of business in Dallas, TX.

Comment Date: 5 p.m. Eastern Time on December 27, 2004.

10. Westar Energy, Inc.

[Docket No. ER05–307–000]

Take notice that on December 7, 2004, Westar Energy, Inc. (Westar) submitted an executed agreement between Westar and PR&W Electric Cooperative Association, Inc. (PRW). Westar states that this agreement allows Westar to deliver electric power and energy across PRW's facilities for redelivery to Westar's Carnahan Creek metering point from time to time.

Westar states that copies of the filing were served upon the Kansas Corporation Commission and PRW.

Comment Date: 5 p.m. Eastern Time on December 28, 2004.

11. Westar Energy, Inc.

[Docket No. ER05–308–000]

Take notice that on December 7, 2004, Westar Energy, Inc. (Westar) submitted an executed agreement between Westar and the Flint Hills Electric Cooperative Association, Inc. (FHREC). Westar states that this agreement allows Westar to deliver electric power and energy across FHREC's facilities for redelivery to Westar's Delavan metering point from time to time.

Westar states that the copies of the filing were served upon the Kansas Corporation Commission and FHREC.

Comment Date: 5 p.m. Eastern Time on December 28, 2004.

12. Old Dominion Electric Cooperative

[Docket No. ER05–309–000]

Take notice that on December 7, 2004, Old Dominion Electric Cooperative (Old Dominion) filed an application under section 205 of the Federal Power Act and sections 35.12 and 131.53 of the Commission's rules and regulations, for approval of old Dominion's application for acceptance of initial tariff; a notice of cancellation of existing tariff; and a request for waivers. Specifically, Old Dominion states that it tendered for filing Old Dominion Electric Cooperative FERC Electric Tariff Original Volume No. 3, requesting an effective January 1, 2005.

Old Dominion states that a copy of the filing was served upon each of the Member Cooperatives and the public service commissions in the Commonwealth of Virginia and the states of Delaware, Maryland and West Virginia.

Comment Date: 5 p.m. Eastern Time on December 28, 2004.

13. Spokane Energy, LLC

[Docket No. ER05–310–000]

Take notice that on December 7, 2004, Spokane Energy, LLC (Spokane Energy) filed with the Commission a revised Market Based Rate Tariff to incorporate the Market Behavior Rules contained in the Commission's November 17, 2003 *Order Amending Market-Based Tariffs and Authorizations,* 105 FERC ¶ 61,218 (2003).

Comment Date: 5 p.m. Eastern Time on December 28, 2004.

14. Avista Corporation

[Docket No. ER05–312–000]

Take notice that on December 7, 2004, Avista Corporation d/b/a/ Avista Utilities (Avista Utilities) filed with the Commission a revised Market Based Rate Tariff to incorporate the Market Behavior Rules contained in the Commission's November 17, 2003 *Order Amending Market-Based Tariffs and Authorizations,* 105 FERC ¶ 61,218 (2003).

Comment Date: 5 p.m. Eastern Time on December 28, 2004.

15. Avista Energy, Inc.

[Docket No. ER05–313–000]

Take notice that on December 7, 2004, Avista Energy, Inc (Avista Energy) filed with the Federal Energy Regulatory Commission a revised Market Based Rate Tariff to incorporate the Market Behavior Rules contained in the Commission's November 17, 2003 *Order Amending Market-Based Tariffs and Authorizations,* 105 FERC ¶ 61,218 (2003). Avista Energy states that it is an investor-owned public utility established and organized under the laws of the State of Washington, with its principal offices located in Spokane, Washington.

Comment Date: 5 p.m. Eastern Time on December 28, 2004.

16. California Independent System Operator Corporation

[Docket No. ER05–314–000]

Take notice that on December 8, 2004, the California Independent System Operator Corporation (ISO) submitted an informational filing in accordance with Article IX, section B of the Stipulation and Agreement approved by

the Commission on May 28, 1999, California Independent System Operator Corp., 87 FERC ¶ 61,250 (1999) (Stipulation and Agreement). ISO states that this provision requires the ISO to provide on a confidential basis to the Commission (1) information regarding any notice from an RMR Unit requesting a change of Condition; (2) the date the chosen Condition will begin; and (3) if the change is from Condition 2, the applicable level of Fixed Option Payment.

ISO further states as required by the provision, it has provided notice of the changes of condition described in the informational filing (subject to the applicable Non-Disclosure and Confidentiality Agreement in the RMR Contract) to the designated RMR contact persons at the California Public Utilities Commission, the California Electricity Oversight Board, the applicable Responsible Utilities, and the relevant RMR Owners.

Comment Date: 5 p.m. Eastern Time on December 29, 2004.

17. American Electric Power Service Corporation

[Docket No. ER05–315–000]

Take notice that on December 8, 2004, the American Electric Power Service Corporation (AEPSC), as agent for Appalachian Power Company tendered for filing first revised service agreement No. 276 which supersedes original service agreement No. 276 between Appalachian Power Company and Twelvepole Creek, LLC. AEP requests an effective date of December 8, 2004.

AEPSC states that a copy of the filing was served upon the Public Service Commission of West Virginia.

Comment Date: 5 p.m. Eastern Time on December 29, 2004.

18. Brent Boyles

[Docket No. ID4186–000]

Take notice that on November 24, 2004, Brent Boyles (Boyles) tendered for filing with the Commission an application for authority to hold interlocking positions in Northern Maine Independent System Administrator, Inc., Maine Public Service Company, and Maine Yankee Atomic Power Company.

Comment Date: 5 p.m. Eastern Time on December 27, 2004.

19. Decatur Energy Center, LLC

[Docket Nos. QF01–103–003 and EL05–31–000]

Take notice that on November 29, 2004, Decatur Energy Center, LLC (Applicant) tendered for filing a petition for limited waiver of the Commission's operating and efficiency standards for a topping-cycle cogeneration facility.

Comment Date: 5 p.m. Eastern Time on December 29, 2004.

Standard Paragraph

Any person desiring to intervene or to protest this filing must file in accordance with Rules 211 and 214 of the Commission's Rules of Practice and Procedure (18 CFR 385.211 and 385.214). Protests will be considered by the Commission in determining the appropriate action to be taken, but will not serve to make protestants parties to the proceeding. Any person wishing to become a party must file a notice of intervention or motion to intervene, as appropriate. Such notices, motions, or protests must be filed on or before the comment date. Anyone filing a motion to intervene or protest must serve a copy of that document on the Applicant and all parties to this proceeding.

The Commission encourages electronic submission of protests and interventions in lieu of paper using the ''eFiling'' link at *http://www.ferc.gov.* Persons unable to file electronically should submit an original and 14 copies of the protest or intervention to the Federal Energy Regulatory Commission, 888 First Street, NE., Washington, DC 20426.

This filing is accessible on-line at *http://www.ferc.gov,* using the ''eLibrary'' link and is available for review in the Commission's Public Reference Room in Washington, DC. There is an ''eSubscription'' link on the web site that enables subscribers to receive e-mail notification when a document is added to a subscribed docket(s). For assistance with any FERC Online service, please e-mail *FERCOnlineSupport@ferc.gov,* or call (866) 208–3676 (toll free). For TTY, call (202) 502–8659.

Magalie R. Salas,

Secretary.

[FR Doc. E4–3724 Filed 12–17–04; 8:45 am]

BILLING CODE 6717–01–P

DEPARTMENT OF ENERGY

Federal Energy Regulatory Commission

[Docket No. ER02–1656–021, et al.]

California Independent System Operator Corporation, *et al.*; Electric Rate and Corporate Filings

December 13, 2004.

The following filings have been made with the Commission. The filings are listed in ascending order within each docket classification.

1. California Independent SystemOperator Corporation

[Docket No. ER02–1656–021]

Take notice that on December 8, 2004, the California Independent System Operator Corporation (CAISO) submitted its proposed conceptual treatment of existing transmission contracts under the CAISO's amended comprehensive market design proposal. The CAISO requests that the Commission approve the ETC Proposal by February 18, 2005.

The CAISO states that this filing has been served upon the Public Utilities Commission of the State of California, the California Energy Commission, the California Electricity Oversight Board, all parties with Scheduling Coordinator Agreements under the CAISO Tariff, and all parties on the official service list for the captioned docket. In addition, the CAISO states that it has posted this filing on its Home Page.

Comment Date: 5 p.m. eastern time on December 29, 2004.

2. Tucson Electric Power Company

[Docket No. ER04–1210–001]

Take notice that, on December 2, 2004, Tucson Electric Power Company (Tucson Electric) submitted a compliance filing pursuant to a Commission letter order issued on November 5, 2004 in Docket No. ER04–1210–000.

Tucson Electric states that copies of the filing were served on parties on the official service list in the above-captioned proceeding.

Comment Date: 5 p.m. eastern time on December 23, 2004.

3. Avista Turbine Power, Inc.

[Docket No. ER05–311–000]

Take notice that on December 7, 2004, Avista Turbine Power, Inc. (Avista Turbine) filed with the Commission a revised market based rate tariff to incorporate the market behavior rules contained in the November 17, 2003, *Order Amending Market-Based Tariffs and Authorizations,* 105 FERC ¶ 61,218 (2003).

Comment Date: 5 p.m. eastern time on December 28, 2004.

4. FPL Energy Marcus Hook, L.P.

[Docket No. ER05–316–000]

Take notice that on December 8, 2004, FPL Energy Marcus Hook, L.P. (Marcus Hook) submitted its rate schedule and supporting cost data for a proposed reactive support and voltage control from generation sources service for its

cogeneration facility located in Marcus Hook, Pennsylvania. Marcus Hook requests an effective date of February 1, 2005.

Comment Date: 5 p.m. eastern time on December 29, 2004.

5. Pajaro Energy Center, LLC

[Docket No. ER05–317–000]

Take notice that on December 8, 2004, Pajaro Energy Center, LLC (Pajaro) filed a notice of cancellation of its Rate Schedule FERC No. 1. Pajaro requests an effective date of December 9, 2004.

Comment Date: 5 p.m. eastern time on December 29, 2004.

6. PJM Interconnection, L.L.C.

[Docket No. ER05–318–000]

Take notice that on December 8, 2004, PJM Interconnection, L.L.C. (PJM), submitted for filing an executed interconnection service agreement (ISA) among PJM, MM Hackensack Energy, LLC, and Public Service Electric and Gas Company, and a notice of cancellation of an interconnection service agreement that has been superseded. PJM requests an effective date of November 8, 2004.

PJM states that copies of this filing were served upon the parties to the agreement and the state regulatory commissions within the PJM region.

Comment Date: 5 p.m. eastern time on December 29, 2004.

7. PJM Interconnection, L.L.C.

[Docket No. ER05–319–000]

Take notice that on December 8, 2004, PJM Interconnection, L.L.C. (PJM), submitted for filing an executed interconnection service agreement (ISA) among PJM, MM Hackensack Energy, LLC, and Public Service Electric and Gas Company, and a notice of cancellation of an interconnection service agreement that has been superseded. PJM requests an effective date of November 8, 2004.

PJM states that copies of this filing were served upon the parties to the agreement and the state regulatory commissions within the PJM region.

Comment Date: 5 p.m. eastern time on December 29, 2004.

Standard Paragraph:

Any person desiring to intervene or to protest this filing must file in accordance with Rules 211 and 214 of the Commission's Rules of Practice and Procedure (18 CFR 385.211 and 385.214). Protests will be considered by the Commission in determining the appropriate action to be taken, but will not serve to make protestants parties to the proceeding. Any person wishing to become a party must file a notice of intervention or motion to intervene, as appropriate. Such notices, motions, or protests must be filed on or before the comment date. Anyone filing a motion to intervene or protest must serve a copy of that document on the Applicant and all parties to this proceeding.

The Commission encourages electronic submission of protests and interventions in lieu of paper using the ''eFiling'' link at *http://www.ferc.gov*. Persons unable to file electronically should submit an original and 14 copies of the protest or intervention to the Federal Energy Regulatory Commission, 888 First Street, NE., Washington, DC 20426.

This filing is accessible on-line at *http://www.ferc.gov*, using the ''eLibrary'' link and is available for review in the Commission's Public Reference Room in Washington, DC. There is an ''eSubscription'' link on the Web site that enables subscribers to receive e-mail notification when a document is added to a subscribed docket(s). For assistance with any FERC Online service, please e-mail *FERCOnlineSupport@ferc.gov*, or call (866) 208–3676 (toll free). For TTY, call (202) 502–8659.

Magalie R. Salas,

Secretary.

[FR Doc. E4–3729 Filed 12–17–04; 8:45 am]

BILLING CODE 6717–01–P

DEPARTMENT OF ENERGY

Federal Energy Regulatory Commission

[Project No. 2206–021]

Progress Energy Carolinas, Inc.; Notice of Availability of Final Environmental Assessment

December 13, 2004.

In accordance with the National Environmental Policy Act of 1969 and the Federal Energy Regulatory Commission's (Commission) regulations, 18 CFR part 380 (Order No. 486, 52 FR 47897), the staff of the Office of Energy Projects' has prepared a Final Environmental Assessment (FEA) for Progress Energy Carolina Inc.'s application for amendment of license. On December 28, 2001, Progress Energy Carolinas, Inc., licensee for the Tillery Development of the Yadkin-Pee Dee River Project, FERC No. 2206, filed a shoreline management plan (SMP) as required in the September 20, 1999, order amending the license. The SMP is for the Tillery Development, which is located on the Yadkin-Pee Dee River in Montgomery and Stanly Counties, North Carolina.

The FEA contains the staff's analysis of the potential environmental impacts of implementing the SMP and concludes that approval of the plan would not constitute a major federal action significantly affecting the quality of the human environment.

A copy of the FEA is attached to an order titled ''Order Modifying and Approving Shoreline Management Plan'' issued on November 24, 2004, which is available for review at the Commission in the Public Reference Room, or it may be viewed on the Commission's Web site at *http://www.ferc.gov* using the ''eLibrary'' link. Enter the docket number (prefaced by P-) and excluding the last three digits, in the docket number field to access the document. For assistance, please contact FERC Online Support at *FERCOnlineSupport@ferc.gov* or toll-free (866) 208–3676, or for TTY, contact (202) 502–8659.

For further information, contact Shana High at 202–502–8674.

Magalie R. Salas,

Secretary.

[FR Doc. E4–3719 Filed 12–17–04; 8:45 am]

BILLING CODE 6717–01–P

DEPARTMENT OF ENERGY

Federal Energy Regulatory Commission

[Docket No. CP05–25–000]

Seafarer U.S. Pipeline System, Inc.; Supplemental Notice of Preparation of an Environmental Impact Statement for the Proposed Seafarer U.S. Pipeline System Project and Request for Comments on Environmental Issues

December 13, 2004.

The staff of the Federal Energy Regulatory Commission (FERC or Commission) are preparing an environmental impact statement (EIS) that will discuss the environmental impacts of the Seafarer U.S. Pipeline System Project (project or Seafarer Project) proposed by Seafarer U.S. Pipeline System, Inc. (hereafter referred to as Seafarer).[1] The FERC will be the

[1] Seafarer's application was filed with the Commission in Docket No. CP05–25–000 on November 16, 2004, under seciton 7(c) of the Natural Gas Act and part 157 and part 284 of the FERC's regulations. Prior to that date, Seafarer began working with FERC staff under FERC's pre-filing environmental review process and started filing portions of its applicaiton under Docket No. PF04–8–000 on April 23, 2004. All documents filed under Docket No. PF04–8–000 are part of the record for Docket No. CP05–25–000.

lead federal agency in the preparation of the EIS, but will prepare the EIS in coordination with its cooperating agencies: The Minerals Management Service, the U.S. Army Corps of Engineers, the National Oceanic and Atmospheric Administration-National Marine Fisheries Service, the U.S. Fish and Wildlife Service, and the U.S. Environmental Protection Agency. The document will satisfy the requirements of the National Environmental Policy Act.

This notice supplements the informational letter issued by the FERC on June 4, 2004, which announced FERC's initiation of a pre-filing environmental review for the Seafarer Project, and the Notice of Intent (NOI) to Prepare an EIS issued on June 30, 2004. Those previous transmittals provided information about the proposed project and the FERC's environmental review process and requested comments on the scope of issues to address in the EIS. The comment period for the NOI closed on August 16, 2004.

As initially proposed in the pre-filing documentation submitted to the FERC and described in the two previous transmittals issued by the FERC, the nearshore pipeline alignment would have included an initial landfall in the Town of Palm Beach Shores, on the southern end of Singer Island. From that point, the pipeline route would have crossed Peanut Island in route to a mainland landfall adjacent to the Florida Power & Light (FPL) Riviera Beach Power Plant. The Town of Palm Beach Shores and numerous commentors expressed concerns that the initially proposed alignment and landfall point could interfere with recreational use and residential and commercial land uses on Singer Island. Resource agencies consulted during the route selection and pre-filing process also expressed concerns that the initially proposed nearshore construction procedures, which included a series of horizontal directional drills (HDDs) and direct lay of the pipeline with rock cover, would not adequately avoid and minimize potential direct impacts to marine hardbottom and coral reef resources.

To address the comments and concerns identified during the pre-filing and EIS scoping periods, Seafarer developed a modified route alignment and nearshore installation methodology, which were identified in the application that Seafarer filed with the FERC on November 16, 2004. The currently proposed project alignment would avoid landfall on, and a pipeline route beneath, Singer and Peanut Islands (*see* Appendix 1). Additionally, Seafarer indicates that the currently proposed nearshore project installation methodology, which reflects the incorporation of tunnel construction methodology, would reduce potential direct impacts to marine hardbottom and coral reef resources, relative to the initially proposed construction methods. The majority of the proposed off- and onshore project route and aboveground facilities would not be affected by the modified proposal.

As currently proposed, a hydroshield tunnel boring machine (TBM) would be used to construct a watertight, approximately 3-mile-long, 10.5-foot-inner-diameter, concrete-lined tunnel. The tunnel would extend from an initial project landfall on FPL Riviera Beach Power Plant property (milepost [MP] 34.6) to an exit point approximately 1.4 miles offshore Singer Island in approximately 80 FSW (MP 31.6). Over 90 percent of the length of the tunnel would be constructed at depths greater than 40 feet beneath the seafloor. Once completed, the tunnel would provide a conduit for installation of the nearshore portion of the pipeline. Beyond the tunnel exit point, the pipeline would rest on the seafloor and rejoin the initially proposed project alignment. A tunnel reception pit would be excavated at the transition point between the tunnel and the direct lay portion of the pipeline, and would facilitate retrieval of the TBM, pipeline installation within the tunnel, and construction of an offshore mainline valve.

No onshore alignment changes would be required in association with the currently proposed modifications, except that required to connect the tunnel entry point with the previously proposed onshore alignment in the vicinity of the FPL Riviera Beach Power Plant. The pressure reduction facilities previously proposed for construction near the FPL power plant would be incorporated into the previously proposed FGT West Riviera Meter Station. A contractor yard comprising 10.2 acres would be sited on FPL Riviera Beach Power Plant property adjacent to the tunnel entry point to facilitate tunnel construction. This area would house tunnel support facilities and provide equipment and material storage. No other aboveground facilities or workspace areas would be affected by the currently proposed modifications.

We [2] consider the modified nearshore project route and installation methodology as the proposed action, and will evaluate the potential environmental impacts of that action in our EIS. The environmental impacts associated with the initially proposed nearshore project alignment and installation methodology will be addressed as alternatives to the proposed action in our EIS.

[2] "We", "us," and "our" refer to the environmental staff of the Office of Energy Projects.

Public Participation

You can make a difference by providing us with your specific comments or concerns about the project. By becoming a commentor, your concerns will be addressed in the EIS and considered by the Commission. You should focus on the potential environmental effects of the proposal and measures to avoid or lessen environmental impact. The more specific your comments, the more useful they will be. Please carefully follow these instructions to ensure that your comments are received in time and properly recorded:

- Send an original and two copies of your letter to: Magalie R. Salas, Secretary, Federal Energy Regulatory Commission, 888 First St., NE., Room 1A, Washington, DC 20426.
- Label one copy of the comments for the attention of Gas Branch 3.
- Reference Docket No. CP05–25–000.
- Mail your comments so that they will be received in Washington, DC on or before January 20, 2005.

We will include all comments that we receive within a reasonable time frame in our environmental analysis of this project. To expedite our receipt and consideration of your comments, the Commission strongly encourages electronic submission of any comments on this project. *See* 18 CFR 385.2001(a)(1)(iii) and the instructions on the Commission's Web site at *http://www.ferc.gov* under the "e-Filing" link and the link to the User's Guide. Before you can file comments you will need to create a free account which can be created on-line.

In lieu of sending written comments, we invite you to attend the public scoping meeting we have scheduled as follows: Wednesday, January 19, 2005, 7 p.m. Seafarer U.S. Pipeline System Project, Town of Palm Beach Shores Town Hall, 247 Edwards Lane, Palm Beach Shores, FL 33404, telephone: (561) 844–3457.

The public scoping meeting is designed to provide another opportunity to offer comments on the proposed project. Interested groups and individuals are encouraged to attend the meeting and to present comments on the environmental issues they believe should be addressed in the EIS. A transcript of the meeting will be

generated so that your comments will be accurately recorded.

Everyone who responds to this notice or submits comments throughout the EIS process will be retained on our mailing list. If you do not want to send comments at this time but still want to remain on our mailing list, please return the attached Information Request (see Appendix 2). If you do not return the Information Request, you will be removed from the project mailing list.

Becoming an Intervenor

In addition to involvement in the EIS scoping process, you may want to become an official party to the proceeding known as an ''intervenor.'' Intervenors play a more formal role in the process. Among other things, intervenors have the right to receive copies of case-related Commission documents and filings by other intervenors. Likewise, each intervenor must send one electronic copy (using the Commission's eFiling system) or 14 paper copies of its filings to the Secretary of the Commission and must send a copy of its filings to all other parties on the Commission's service list for this proceeding. If you want to become an intervenor you must file a motion to intervene according to Rule 214 of the Commission's Rules of Practice and Procedure (18 CFR 385.214; *see* Appendix 3).[3] Only intervenors have the right to seek rehearing of the Commission's decision.

Affected landowners and parties with environmental concerns may be granted intervenor status upon showing good cause by stating that they have a clear and direct interest in this proceeding which would not be adequately represented by any other parties. You do not need intervenor status to have your environmental comments considered.

Environmental Mailing List

This notice is being sent to affected landowners; Federal, State, and local government agencies; elected officials; environmental and public interest groups; Native American tribes; local libraries and newspapers; and other interested parties that expressed an interest in the project during the pre-filing and EIS scoping periods. We encourage government representatives to notify their constituents of this planned project and encourage them to comment on their areas of concern.

Additional Information

Additional information about the project is available from the Commission's Office of External Affairs, at 1–866–208–FERC or on the FERC Internet Web site (*http://www.ferc.gov*) using the eLibrary link. Click on the eLibrary link, click on ''General Search'' and enter the docket number excluding the last three digits (*i.e.*, CP05–25) in the Docket Number field. Be sure you have selected an appropriate date range. For assistance, please contact FERC Online Support at *FERCOnlineSupport@ferc.gov* or toll free at 1–866–208–3676, or for TTY, contact (202) 502–8659. The eLibrary link also provides access to the texts of formal documents issued by the Commission, such as orders, notices, and rulemakings.

In addition, the Commission now offers a free service called eSubscription which allows you to keep track of all formal issuances and submittals in specific dockets. This can reduce the amount of time you spend researching proceedings by automatically providing you with notification of these filings, document summaries and direct links to the documents. Go to *http://www.ferc.gov/esubscribenow.htm.*

Finally, Seafarer has established an Internet Web site for this project at *http://www.seafarer.us/.* The Web site includes a description of the project, a map of the proposed pipeline route, and answers to frequently asked questions. You can also request additional information or provide comments directly to Seafarer at (866) 683–5587.

Magalie R. Salas,

Secretary.

[FR Doc. E4–3722 Filed 12–17–04; 8:45 am]

BILLING CODE 6717–01–P

[3] Interventions may also be filed electronically via the Internet in lieu of paper. *See* the previous discussion on filing comments electronically.

ENVIRONMENTAL PROTECTION AGENCY

[OPP–2004–0408; FRL–7690–9]

Pesticide Products; Registration Applications

AGENCY: Environmental Protection Agency (EPA).

ACTION: Notice.

SUMMARY: This notice announces receipt of applications to register pesticide products containing new active ingredients not included in any previously registered products pursuant to the provisions of section 3(c)(4) of the Federal Insecticide, Fungicide, Rodenticide Act (FIFRA), as amended.

DATES: Comments, identified by docket identification (ID) number OPP–2004–0408, must be received on or before January 19, 2005.

ADDRESSES: Comments may be submitted electronically, by mail, or through hand delivery/courier. Follow the detailed instructions as provided in Unit I. of the **SUPPLEMENTARY INFORMATION.**

FOR FURTHER INFORMATION CONTACT: Joanne Miller, Registration Division (7505C) Office of Pesticide Programs, Environmental Protection Agency, 1200 Pennsylvania Ave., NW., Washington, DC 20460–0001; telephone number: (703) 305–6224; fax number: (703) 305–6224); e-mail address: *miller.joanne@epa.gov.*

I. General Information

A. Does this Action Apply to Me?

You may be potentially affected by this action if you are an agricultural producer, food manufacturer, or pesticide manufacturer. Potentially affected entities may include, but are not limited to:

- Crop production (NAICS 111)
- Animal production (NAICS 112)
- Food manufacturing (NAICS 311)
- Pesticide manufacturing (NAICS 32532)

This listing is not intended to be exhaustive, but rather provides a guide for readers regarding entities likely to be affected by this action. Other types of entities not listed in this unit could also be affected. The North American Industrial Classification System (NAICS) codes have been provided to assist you and others in determining whether this action might apply to certain entities. To determine whether you or your business may be affected by this action, you should carefully examine the applicability provisions in the North American Industrial Classification System (NAICS). If you have any questions regarding the applicability of this action to a particular entity, consult the person listed under **FOR FURTHER INFORMATION CONTACT.**

B. How Can I Get Copies of this Document and Other Related Information?

1. *Docket.* EPA has established an official public docket for this action under docket ID number OPP–2004–0408. The official public docket consists of the documents specifically referenced in this action, any public comments received, and other information related to this action. Although a part of the official docket, the public docket does not include Confidential Business Information (CBI) or other information whose disclosure is restricted by statute. The official public docket is the collection of materials that is available

for public viewing at the Public Information and Records Integrity Branch (PIRIB), Rm. 119, Crystal Mall #2, 1801 S. Bell St., Arlington, VA. This docket facility is open from 8:30 a.m. to 4 p.m., Monday through Friday, excluding legal holidays. The docket telephone number is (703) 305–5805.

2. *Electronic access.* You may access this **Federal Register** document electronically through the EPA Internet under the ''**Federal Register**'' listings at *http://www.epa.gov/fedrgstr/.*

An electronic version of the public docket is available through EPA's electronic public docket and comment system, EPA Dockets. You may use EPA Dockets at *http://www.epa.gov/edocket/* to submit or view public comments, access the index listing of the contents of the official public docket, and to access those documents in the public docket that are available electronically. Once in the system, select ''search,'' then key in the appropriate docket ID number.

Certain types of information will not be placed in the EPA Dockets. Information claimed as CBI and other information whose disclosure is restricted by statute, which is not included in the official public docket, will not be available for public viewing in EPA's electronic public docket. EPA's policy is that copyrighted material will not be placed in EPA's electronic public docket but will be available only in printed, paper form in the official public docket. To the extent feasible, publicly available docket materials will be made available in EPA's electronic public docket. When a document is selected from the index list in EPA Dockets, the system will identify whether the document is available for viewing in EPA's electronic public docket. Although not all docket materials may be available electronically, you may still access any of the publicly available docket materials through the docket facility identified in Unit I.B. EPA intends to work towards providing electronic access to all of the publicly available docket materials through EPA's electronic public docket.

For public commenters, it is important to note that EPA's policy is that public comments, whether submitted electronically or in paper, will be made available for public viewing in EPA's electronic public docket as EPA receives them and without change, unless the comment contains copyrighted material, CBI, or other information whose disclosure is restricted by statute. When EPA identifies a comment containing copyrighted material, EPA will provide a reference to that material in the version of the comment that is placed in EPA's electronic public docket. The entire printed comment, including the copyrighted material, will be available in the public docket.

Public comments submitted on computer disks that are mailed or delivered to the docket will be transferred to EPA's electronic public docket. Public comments that are mailed or delivered to the docket will be scanned and placed in EPA's electronic public docket. Where practical, physical objects will be photographed, and the photograph will be placed in EPA's electronic public docket along with a brief description written by the docket staff.

C. How and to Whom Do I Submit Comments?

You may submit comments electronically, by mail, or through hand delivery/courier. To ensure proper receipt by EPA, identify the appropriate docket ID number in the subject line on the first page of your comment. Please ensure that your comments are submitted within the specified comment period. Comments received after the close of the comment period will be marked ''late.'' EPA is not required to consider these late comments. If you wish to submit CBI or information that is otherwise protected by statute, please follow the instructions in Unit I.D. Do not use EPA Dockets or e-mail to submit CBI or information protected by statute.

1. *Electronically.* If you submit an electronic comment as prescribed in this unit, EPA recommends that you include your name, mailing address, and an e-mail address or other contact information in the body of your comment. Also include this contact information on the outside of any disk or CD ROM you submit, and in any cover letter accompanying the disk or CD ROM. This ensures that you can be identified as the submitter of the comment and allows EPA to contact you in case EPA cannot read your comment due to technical difficulties or needs further information on the substance of your comment. EPA's policy is that EPA will not edit your comment, and any identifying or contact information provided in the body of a comment will be included as part of the comment that is placed in the official public docket, and made available in EPA's electronic public docket. If EPA cannot read your comment due to technical difficulties and cannot contact you for clarification, EPA may not be able to consider your comment.

i. *EPA Dockets.* Your use of EPA's electronic public docket to submit comments to EPA electronically is EPA's preferred method for receiving comments. Go directly to EPA Dockets at *http://www.epa.gov/edocket/*, and follow the online instructions for submitting comments. Once in the system, select ''search,'' and then key in docket ID number OPP–2004–0408. The system is an ''anonymous access'' system, which means EPA will not know your identity, e-mail address, or other contact information unless you provide it in the body of your comment.

ii. *E-mail.* Comments may be sent by e-mail to *opp-docket@epa.gov*, Attention: Docket ID number OPP–2004-0408. In contrast to EPA's electronic public docket, EPA's e-mail system is not an ''anonymous access'' system. If you send an e-mail comment directly to the docket without going through EPA's electronic public docket, EPA's e-mail system automatically captures your e-mail address. E-mail addresses that are automatically captured by EPA's e-mail system are included as part of the comment that is placed in the official public docket, and made available in EPA's electronic public docket.

iii. *Disk or CD ROM.* You may submit comments on a disk or CD ROM that you mail to the mailing address identified in Unit I.C.2. These electronic submissions will be accepted in WordPerfect or ASCII file format. Avoid the use of special characters and any form of encryption.

2. *By mail.* Send your comments to: Public Information and Records Integrity Branch (PIRIB) (7502C), Office of Pesticide Programs (OPP), Environmental Protection Agency, 1200 Pennsylvania Ave., NW., Washington, DC 20460–0001, Attention: Docket ID number OPP–2004–0408.

3. *By hand delivery or courier.* Deliver your comments to: Public Information and Records Integrity Branch (PIRIB), Office of Pesticide Programs (OPP), Environmental Protection Agency, Rm. 119, Crystal Mall #2, 1801 S. Bell St., Arlington, VA, Attention: Docket ID number OPP–2004–0408. Such deliveries are only accepted during the docket's normal hours of operation as identified in Unit I.B.1.

D. How Should I Submit CBI to the Agency?

Do not submit information that you consider to be CBI electronically through EPA's electronic public docket or by e-mail. You may claim information that you submit to EPA as CBI by marking any part or all of that information as CBI (if you submit CBI on disk or CD ROM, mark the outside of the disk or CD ROM as CBI and then identify electronically within the disk or CD ROM the specific information that is

CBI). Information so marked will not be disclosed except in accordance with procedures set forth in 40 CFR part 2.

In addition to one complete version of the comment that includes any information claimed as CBI, a copy of the comment that does not contain the information claimed as CBI must be submitted for inclusion in the public docket and EPA's electronic public docket. If you submit the copy that does not contain CBI on disk or CD ROM, mark the outside of the disk or CD ROM clearly that it does not contain CBI. Information not marked as CBI will be included in the public docket and EPA's electronic public docket without prior notice. If you have any questions about CBI or the procedures for claiming CBI, please consult the person listed under **FOR FURTHER INFORMATION CONTACT.**

E. What Should I Consider as I Prepare My Comments for EPA?

You may find the following suggestions helpful for preparing your comments:

1. Explain your views as clearly as possible.
2. Describe any assumptions that you used.
3. Provide any technical information and/or data you used that support your views.
4. If you estimate potential burden or costs, explain how you arrived at your estimate.
5. Provide specific examples to illustrate your concerns.
6. Offer alternatives.
7. Make sure to submit your comments by the comment period deadline identified.
8. To ensure proper receipt by EPA, identify the appropriate docket ID number in the subject line on the first page of your response. It would also be helpful if you provided the name, date, and **Federal Register** citation related to your comments.

II. Registration Applications

EPA received applications as follows to register pesticide products containing active ingredients not included in any previously registered products pursuant to the provisions of section 3(c)(4) of FIFRA. Notice of receipt of these applications does not imply a decision by the Agency on the applications.

Products Containing Active Ingredients Not Included in Any Previously Registered Pesticide Products

1. *File symbol*: 62719–LRI. *Applicant:* Dow AgroSciences LLC, 9330 Zionsville Road, Indianapolis, IN 46268. *Product name*: *Aminopyralid Technical. Active ingredient*: 4-Amino-3,6-dichloro-2-pyridinecarboxylic acid (Aminopyralid) at 95.3%. *Proposed classification/Use*: None. For manufacturing use only.

2. *File symbol*: 62719-LRO. *Applicant*: Dow AgroSciences LLC, 9330 Zionsville Road, Indianapolis, IN 46268.*Product name*: GF-871. *Active ingredient*: Triisopropanolammonium salt of aminopyralid, 40.6%. *Proposed classification/Use*: None. For control of annual and perennial broadleaf weeds, including invasive and noxious weeds, on rangeland, permanent grass pastures, Conservation Reserve Program (CRP) acres, non-cropland areas (such as rights-of-way, roadsides and non-irrigation ditch banks), natural areas (such as wildlife management areas, natural recreation areas, campgrounds, trailheads and trails), and grazed areas in an around these sites; and for control of annual and perennial broadleaf weeds in wheat (including spring wheat, winter wheat, and durum).

List of Subjects

Environmental Protection, Pesticides and Pests.

Dated: December 9, 2004.

Lois Rossi,

Director, Registration Division, Office of Pesticide Programs.

[FR Doc. 04–27768 Filed 12–17–04; 8:45 am]

BILLING CODE 6560–50–S

ENVIRONMENTAL PROTECTION AGENCY

[FRL–7846–9]

Notice of Availability and Opportunity To Provide Comment on the Framework for Inorganic Metals Risk Assessment (External Review Draft)(ORD–2004–0017)

AGENCY: Environmental Protection Agency (EPA).

ACTION: Notice of Availability and Public Comment Period.

SUMMARY: EPA is today announcing the availability of the draft Framework for Inorganic Metals Risk Assessment and the beginning of the public comment period on the draft document. This draft document will be peer reviewed by the U.S. Environmental Protection Agency's (EPA) Science Advisory Board at a public meeting that will be announced in a separate **Federal Register** notice.

DATES: Comments should be received by Tuesday, January 18, 2005.

ADDRESSES:

Document Availability

The Framework for Inorganic Metals Risk Assessment (External Review Draft, November 2004, EPA/630/P–04068c) will be available on or about December 20, 2004, on the Internet at *http://cfpub2.epa.gov/ncea/raf/recordisplay.cfm?deid=88903*. A limited number of paper copies will be available from the EPA's Technical Information Staff, National Center for Environmental Assessment (NCEA), Mail Code 8623D, Washington, DC 20460; telephone: 202–564–3261; facsimile: 202–565–0050. Please provide your name and mailing address and the title and EPA number of the requested publication.

Submitting Comments

One of three methods may be chosen to submit comments. First, comments may be submitted through EPA's electronic public docket and comment system, EPA Dockets. EPA Dockets is available at *http://www.epa.gov/edocket/*. Once in the system, select ''Submit Comments,'' then key in the appropriate Docket Identification Number (ORD–2004–0017). Second, comments may be submitted via e-mail to ''*ORD.Docket@epa.gov.*'' Third, paper copies of comments may be submitted (in duplicate if possible) to the Docket at the U.S. Environmental Protection Agency, EPA Docket Center (EPA/DC), Office of Research and Development Docket (28221T), 1200 Pennsylvania Avenue, NW., Washington, DC 20460. Please refer to Docket Identification Number ORD–2004–0017 in e-mail and in paper correspondence. Acknowledgments will not be sent for electronic or paper comment submissions. Persons providing information or comments should not submit personal information (such as medical data or home address), Confidential Business Information, or information protected by copyright because all comments will be made available for public viewing.

Viewing Comments

EPA intends to make all comments received in response to this **Federal Register** notice available via Internet (*http://www.epa.gov/edocket/*), including documents originally submitted in paper format. To view comments select ''Quick Search,'' then key in the appropriate Docket Number (ORD–2004–0017). Alternatively you may visit the EPA Office of Environmental Information(OEI) Docket in the Headquarters EPA Docket Center, (EPA/DC) EPA West Building, Room B102, 1301 Constitution Avenue, NW., Washington, DC 20460. The EPA Docket Center Public Reading Room is open from 8:30 a.m. to 4:30 p.m., Monday through Friday, excluding legal holidays. The telephone number for the

Public Reading Room is (202) 566–1744, and the telephone number for the OEI Docket is (202) 566–1752; facsimile: (202) 566–1753; or e-mail: *ORD.Docket@epa.gov*. Visitors to the Public Reading Room are required to show photographic identification and sign the Agency's visitor log. There may be a reasonable fee for copying docket materials, as provided in 40 CFR part 2.

FOR FURTHER INFORMATION CONTACT: Dr. William P. Wood, Risk Assessment Forum (Mail Code 8601D), U.S. Environmental Protection Agency, 1200 Pennsylvania Avenue, NW., Washington, DC 20460, telephone 202–564–3361, or send electronic mail inquiries to *risk.forum@epa.gov.*

SUPPLEMENTARY INFORMATION:

Background

The Agency recognizes that inorganic metals and metal compounds present unique issues and the added challenge of addressing the complexity of these issues in a consistent manner across the Agency's programs. The draft metals framework reflects an EPA effort to develop cross-agency internal guidance for assessing metals. The overarching goals of the framework are to outline key metal-specific scientific principles and consistent approaches for conducting metals risk assessment, based on the best currently available science. Given the complexity of issues surrounding metals risk assessment, EPA commissioned recognized scientific experts to develop papers on key scientific issues related to risk assessment of metals. These issues included environmental chemistry, exposure, human health effects, ecological effects, and bioavailability and bioaccumulation. The draft framework relies heavily on these issue papers. Development of the framework has also involved extensive consultation with the scientific community, stakeholders, and intended users, including risk assessors in other federal agencies, in different regions, and in the states. Throughout the development process, the Agency has held stakeholder meetings and made the issue papers open for public comment. After peer review deliberation by EPA's Science Advisory Board (SAB) is complete and the framework is finalized, EPA program offices will be in a position to review their current practices against the recommendations of the metals framework and incorporate adjustments as necessary, consistent with the principles of the framework.

Disposition of Comments

EPA requests comments on today's framework and will consider comments in finalizing the document. EPA's SAB will peer-review the framework and will be asked to consider the public comments. A separate notice of the planned SAB meeting also will appear in the **Federal Register**.

Dated: December 3, 2004.

Peter Preuss,

Director, National Center for Environmental Assessment.

[FR Doc. 04–27667 Filed 12–15–04; 8:45 am]

BILLING CODE 6560–50–P

ENVIRONMENTAL PROTECTION AGENCY

[FRL–7850–7]

Federal Agency Hazardous Waste Compliance Docket

AGENCY: Environmental Protection Agency.

ACTION: Notice of twentieth update of the Federal Agency Hazardous Waste Compliance Docket, pursuant to CERCLA section 120(c).

SUMMARY: Section 120(c) of the Comprehensive Environmental Response, Compensation, and Liability Act of 1980 (CERCLA), as amended by the Superfund Amendments and Reauthorization Act of 1986 (SARA), requires the Environmental Protection Agency (EPA) to establish a Federal Agency Hazardous Waste Compliance Docket. The docket is to contain certain information about Federal facilities that manage hazardous waste or from which hazardous substances have been or may be released. (As defined by CERCLA section 101(22), a release is any spilling, leaking, pumping, pouring, emitting, emptying, discharging, injecting, escaping, leaching, dumping, or disposing into the environment.) CERCLA requires that the docket be updated every six months, as new facilities are reported to EPA by Federal agencies. The following list identifies the Federal facilities to be included in this twentieth update of the docket and includes facilities not previously listed on the docket and reported to EPA since the last update of the docket, 69 FR 42989, July 19, 2004, which was current as of January 19, 2004. SARA, as amended by the Defense Authorization Act of 1997, specifies that, for each Federal facility that is included on the docket during an update, evaluation shall be completed in accordance with a reasonable schedule. Such site evaluation activities will help determine whether the facility should be included on the National Priorities List (NPL) and will provide EPA and the public with valuable information about the facility. In addition to the list of additions to the docket, this notice includes a section that comprises revisions (that is, corrections and deletions) of the previous docket list. This update contains 8 additions and 10 deletions since the previous update, as well as numerous other corrections to the docket list. At the time of publication of this notice, the new total number of Federal facilities listed on the docket is 2,291.

DATES: This list is current as of September 13, 2004.

FOR FURTHER INFORMATION CONTACT: Electronic versions of the docket may be obtained at *http://www.epa.gov/compliance/cleanup/federal/index.html.*

SUPPLEMENTARY INFORMATION:

Table of Contents

1.0 Introduction
2.0 Revisions of the Previous Docket
3.0 Process for Compiling the Updated Docket
4.0 Facilities Not Included
5.0 Facility Status Reporting
6.0 Information Contained on Docket Listing

1.0 Introduction

Section 120(c) of the Comprehensive Environmental Response, Compensation, and Liability Act of 1980 (CERCLA), 42 United States Code (U.S.C.) 9620(c), as amended by the Superfund Amendments and Reauthorization Act of 1986 (SARA), required the establishment of the Federal Agency Hazardous Waste Compliance Docket. The docket contains information on Federal facilities that is submitted by Federal agencies to the U.S. Environmental Protection Agency (EPA) under sections 3005, 3010, and 3016 of the Resource Conservation and Recovery Act (RCRA), 42 U.S.C. 6925, 6930, and 6937, and under section 103 of CERCLA, 42 U.S.C. 9603. Specifically, RCRA section 3005 establishes a permitting system for certain hazardous waste treatment, storage, and disposal (TSD) facilities; RCRA section 3010 requires waste generators and transporters and TSD facilities to notify EPA of their hazardous waste activities; and RCRA section 3016 requires Federal agencies to submit biennially to EPA an inventory of hazardous waste sites that the Federal agencies own or operate. CERCLA section 103(a) requires that the National Response Center (NRC) be

notified of a release. CERCLA section 103(c) requires reporting to EPA the existence of a facility at which hazardous substances are or have been stored, treated, or disposed of and the existence of known or suspected releases of hazardous substances at such facilities.

The docket serves three major purposes: (1) To identify all Federal facilities that must be evaluated to determine whether they pose a risk to human health and the environment sufficient to warrant inclusion on the National Priorities List (NPL); (2) to compile and maintain the information submitted to EPA on such facilities under the provisions listed in section 120(c) of CERCLA; and (3) to provide a mechanism to make the information available to the public.

The initial list of Federal facilities to be included on the docket was published on February 12, 1988 (53 FR 4280). Updates of the docket have been published on November 16, 1988 (54 FR 46364); December 15, 1989 (54 FR 51472); August 22, 1990 (55 FR 34492); September 27, 1991 (56 FR 49328); December 12, 1991 (56 FR 64898); July 17, 1992 (57 FR 31758); February 5, 1993 (58 FR 7298); November 10, 1993 (58 FR 59790); April 11, 1995 (60 FR 18474); June 27, 1997 (62 FR 34779); November 23, 1998 (63 FR 64806); June 12, 2000 (65 FR 36994); December 29, 2000 (65 FR 83222); October 2, 2001 (66 FR 50185); July 1, 2002 (67 FR 44200); January 2, 2003 (68 FR 107); July 11, 2003 (68 FR 41353); December 15, 2003 (68 FR 69685); and July 19, 2004 (69 FR 42989). This notice constitutes the twentieth update of the docket.

Today's notice is divided into three sections: (1) Additions, (2) deletions, and (3) corrections. The additions section lists newly identified facilities that have been reported to EPA since the last update and that now are being included on the docket. The deletions section lists facilities that EPA is deleting from the docket. The corrections section lists changes in information about facilities already listed on the docket.

The information submitted to EPA on each Federal facility is maintained in the docket repository located in the EPA Regional office of the Region in which the facility is located (*see* 53 FR 4280 (February 12, 1988) for a description of the information required under those provisions). Each repository contains the documents submitted to EPA under the reporting provisions and correspondence relevant to the reporting provisions for each facility. Contact the following docket coordinators for information on Regional docket repositories:

Gerardo Millán-Ramos (HBS), U.S. EPA Region 1, #1 Congress St., Suite 1100, Boston, MA 02114–2023, (617) 918–1377.

Helen Shannon (ERRD), U.S. EPA Region 2, 290 Broadway, 18th Floor, New York, NY 10007–1866, (212) 637–4260.

Alida Karas (ERRD), U.S. EPA Region 2, 290 Broadway, New York, NY 10007–1866, (212) 637–4276.

Cesar Lee (3HS50), U.S. EPA Region 3, 1650 Arch Street, Philadelphia, PA 19107, (215) 814–3205.

Gena Townsend (4WD–FFB), U.S. EPA Region 4, 61 Forsyth St., SW., Atlanta, GA 30303, (404) 562–8538.

Philip Ofosu (6SF–RA), U.S. EPA Region 6, 1445 Ross Avenue, Dallas, TX 75202–2733, (214) 665–3178.

D. Karla Asberry (FFSC), U.S. EPA Region 7,901 N. Fifth Street, Kansas City, KS 66101, (913) 551–7595.

Stan Zawistowski (EPR–F), U.S. EPA Region 8, 999 18th Street, Suite 500, Denver, CO 80202–2466, (303) 312–6255.

Philip Armstrong (SFD–9–1), U.S. EPA Region 9, 75 Hawthorne Street, San Francisco, CA 94105, (415) 972–3098.

Ken Marcy (ECL–115), U.S. EPA Region 10, 1200 Sixth Avenue, Seattle, WA 98101, (206) 553–2782.

Laura Ripley (SE–5J), U.S. EPA Region 5, 77 W. Jackson Blvd., Chicago, IL 60604, (312) 886–6040.

Monica Lindeman (ECL, SACU2), U.S. EPA Region 10, 1200 Sixth Avenue, Seattle, WA 98101, (206) 553–5113.

2.0 Revisions of the Previous Docket

Following is a discussion of the revisions of the previous docket, including additions, deletions, and corrections.

2.1 Additions

Today, 8 facilities are being added to the docket, primarily because of new information obtained by EPA (for example, recent reporting of a facility pursuant to RCRA sections 3005, 3010, or 3016 or CERCLA section 103). SARA, as amended by the Defense Authorization Act of 1997, specifies that, for each Federal facility that is included on the docket during an update, evaluation shall be completed in accordance with a reasonable schedule.

Of the 39 facilities being added to the docket, none are facilities that have reported to the NRC the release of a reportable quantity (RQ) of a hazardous substance. Under section 103(a) of CERCLA, a facility is required to report to the NRC the release of a hazardous substance in a quantity that equals or exceeds the established RQ. Reports of releases received by the NRC, the U.S. Coast Guard (USCG), and EPA are transmitted electronically to the Transportation Systems Center at the U.S. Department of Transportation (DOT), where they become part of the Emergency Response Notification System (ERNS) database. ERNS is a national computer database and retrieval system that stores information on releases of oil and hazardous substances. Facilities being added to the docket and facilities already listed on the docket for which an ERNS report has been filed are identified by the notation ''103(a)'' in the ''Reporting Mechanism'' column.

It is EPA's policy generally not to list on the docket facilities that are small-quantity generators (SQG) and that have never generated more than 1,000 kilograms (kg) of hazardous waste in any single month. If a facility has generated more than 1,000 kg of hazardous waste in any single month (that is, if the facility is an episodic generator), it will be added to the docket. In addition, facilities that are SQGs and have reported releases under CERCLA section 103 or hazardous waste activities pursuant to RCRA section 3016 will be listed on the docket and will undergo site evaluation activities, such as a PA and, when appropriate, an SI. All such facilities will be listed on the docket, whether or not they are SQGs pursuant to RCRA. As a result, some of the facilities that EPA is adding to the docket today are SQGs that had not been listed on the docket but that have reported releases or hazardous waste activities to EPA under another reporting provision.

In the process of compiling the documents for the Regional repositories, EPA identified a number of facilities that had previously submitted PA reports, SI reports, Department of Defense (DoD) Installation Restoration Program (IRP) reports, or reports under another Federal agency environmental restoration program, but do not appear to have notified EPA under CERCLA section 103. Section 120(c)(3) of CERCLA requires that EPA include on the docket, among other things, information submitted under section 103. In general, section 103 requires persons in charge of a facility to provide notice of certain releases of hazardous substances. The reports under various Federal agency environmental restoration programs may contain information regarding releases of hazardous substances similar to that provided pursuant to section 103. EPA believes that CERCLA section 120(c)

authorizes the agency to include on the docket a facility that has provided information to EPA through documents such as a report under a Federal agency environmental restoration program, regardless of the absence of section 103 reporting. Therefore, some of the facilities that EPA is adding today are being placed on the docket because they have submitted the documents described above that contain reports of releases of hazardous substances.

EPA also includes privately owned, government-operated (POGO) facilities on the docket. CERCLA section 120(c) requires that the docket contain information submitted under RCRA sections 3005, 3010, and 3016 and CERCLA section 103, all of which impose duties on operators as well as owners of facilities. In addition, other subsections of CERCLA section 120 refer to facilities ''owned or operated'' by an agency or other instrumentality of the Federal government. That terminology clearly includes facilities that are operated by the Federal government, even if they are not owned by it. Specifically, CERCLA section 120(e), which sets forth the duties of the Federal agencies after a facility has been listed on the NPL, refers to the Federal agency that ''owns or operates'' the facility. In addition, the primary basis for assigning responsibility for conducting PAs and SIs, as required when a facility is listed on the docket, is Executive Order 12580, which assigns that responsibility to the Federal agency having ''jurisdiction, custody, or control'' over a facility. An operator may be deemed to have jurisdiction, custody, or control over a facility.

2.2 Deletions

Today, 10 facilities are being deleted from the docket. When facilities are deleted from the docket, it is for reasons such as incorrect reporting of hazardous waste activity, change in ownership, and exemption as an SQG under RCRA (40 CFR 262.44). Facilities being deleted no longer will be subject to the requirements of CERCLA section 120(d).

Three United States Department of Agriculture (USDA) sites, including two mine sites and one National Forest, are among the 10 facilities that EPA is deleting from the docket today. The Agency believes it is no longer appropriate to keep these sites on the docket because they involve certain mine sites which the Agency, by policy, generally will no longer list on the docket. These sites also are cleaned up or substantially cleaned up, and may have been listed on the docket due to mistakenly submitted RCRA Section 3016 reports.

Today's USDA deletions are consistent with a recent EPA policy document. In June 2003, EPA issued a policy which addressed the issue of when so-called ''mixed ownership'' mine or mill sites, created as a result of the General Mining Law of 1872 (GML), 30 U.S.C. 22 *et seq.*, should be included on the published list of Federal facilities which have been reported to the docket. As a matter of policy, EPA believes that mixed ownership mine or mill sites created as a result of the GML generally should not be included on the published list of Federal facilities which have been reported to the Docket. Mixed ownership mine or mill sites are those located partially on private land *and* partially on public land. Many mine and mill sites consist of both Federal and private land ownership and, generally under the GML, a person could establish private rights to mine certain minerals on Federally-owned land by staking a claim to the land. Once a claim is established and if it is maintained, the claimant gains rights to the beneficial use of the property incident to mining, but the fee simple title remains with the Federal government. A claimant may, through a process called ''patenting,'' buy the fee simple interest from the Federal government and own the property in its entirety. If the owner of *patented* property abandons it, the property does *not* revert to the United States, but remains private land. The effect of the GML is that thousands of former mine or mill sites are now private properties (inholdings) within the boundaries of Federal land managed as National Forests, National Parks, and Bureau of Land Management (BLM)-managed lands.

2.2.1 Terrero Mine Tailings Site

The Terrero Mine Tailings site is a GML mixed ownership mine site located in New Mexico, and was added to the docket on November 10, 1993. The site has been cleaned up by the responsible party under a series of Administrative Orders on Consent with the State of New Mexico. The USDA Forest Service is not engaged in any cleanup at the site, and no longer manages property in the vicinity of the site. The site is not classified as a Federal facility in CERCLIS, and USDA deeded the roughly eight acres of USDA Forest Service land on the site to the State of New Mexico.

The site was placed on the docket because of the RCRA Section 3016 reporting of Federal agency hazardous waste facilities by USDA. USDA asserts that this RCRA 3016 report may have been submitted in error. USDA's position is that the fact that USDA mistakenly submitted a RCRA 3016 report should not necessarily result in listing the Terrero Mine Tailings Site on the docket.

Regardless of whether it was appropriate to submit a RCRA 3016 report, the Terrero Mine Tailings Site is being deleted from the docket because the site is a GML mixed ownership mine site that the June 2003 EPA policy was intended to address, and because the Terrero Mine Tailings Site has been cleaned up and USDA has no current involvement at the site.

2.2.2 Rio Tinto Mine Site

The Rio Tinto Mine site is a GML mixed ownership mine site located in Nevada, and was added to the docket on December 12, 1991. The site is listed on the docket as the Rio Tinto Copper Mine. The site is being cleaned up through a series of Administrative Orders on Consent between the responsible parties and the State of Nevada. The cleanup is a State-lead action, and the site is primarily privately held. USDA conducted a land exchange with one of the responsible parties to reduce the administrative burden on the State and Federal agencies involved in the cleanup. The land exchange also clarified jurisdictional concerns so that response actions could proceed. USDA Forest Service is a Natural Resources Trustee at the site, and the only other USDA involvement at the site is to maintain a 60-foot right-of-way through the property. The site is not classified as a Federal facility in CERCLIS.

The site was placed on the docket because of the RCRA Section 3016 reporting of Federal agency hazardous waste facilities by USDA. USDA asserts that this RCRA 3016 report may have been submitted in error. USDA's position is that the fact that USDA mistakenly submitted a RCRA 3016 report should not necessarily result in listing the Rio Tinto Copper Mine site on the docket.

Regardless of whether it was appropriate to submit a RCRA 3016 report, the Rio Tinto Copper Mine site is being deleted from the docket because the site is a GML mixed ownership mine site that the June 2003 EPA policy was intended to address, and because the Rio Tinto Copper Mine site is being cleaned up and USDA has little or no current involvement at the site.

2.2.3 Toiyabe National Forest Site

The Toiyabe National Forest site is located in several distinct and scattered areas across western Nevada and eastern California, and was added to the docket on December 15, 1989. The gross

acreage of land within the established external boundaries of the Toiyabe National Forest is approximately 3.4 million acres of which approximately 3.2 million acres are under the jurisdiction of USDA Forest Service. A total of approximately 136,000 acres within the external boundaries of the Toiyabe National Forest are private land inholdings, not under USDA Forest Service jurisdiction, including the Leviathan Mine Site and the Northumberland Mine Site. Addressing the approximately 3.4 million-acre Toiyabe National Forest as a single Federal facility on the docket has created administrative and technical difficulties, and has caused confusion with the public. For example, state regulators have asked USDA to pinpoint the actual facility of concern, knowing that the entire 3 million-plus acre Toiyabe National Forest cannot be the source. The Toiyabe National Forest is approximately the size of some smaller states. Listing an entire State on the docket because of contamination from a few landfills or mine sites would be confusing, as is listing an entire national forest because of contamination from a few mine sites. Contamination causing concern covers only a small fraction of the entire external boundary of the Toiyabe National Forest, and conducting a Preliminary Assessment (PA) of the entire Toiyabe National Forest is not feasible. EPA believes, where appropriate, in instances where an entire National Forest has been listed as a single facility on the docket, it is reasonable to narrow the docket listing by examining the reporting mechanism which is the likely source for the original docket listing. However, this action does not mean that the particular National Forest is free, in its entirety, from contamination of concern. Nor does this action relieve USDA Forest Service from notification requirements to EPA of any site on land under the jurisdiction of USDA Forest Service where there is a release or a threatened release.

The published reporting mechanism that lead to the listing of the entire Toiyabe National Forest on the docket is the RCRA Section 3016 reporting of Federal agency hazardous waste facilities by USDA. RCRA Section 3016 reports were submitted for the Leviathan Mine site, the Northumberland Mine site, and the U.S. Marine Corps Mountain Warfare Training Center.

The Leviathan Mine site is a GML mixed ownership mine site that is now primarily privately (state) owned. USDA asserts that the RCRA 3016 report for the Leviathan Mine site may have been in error, but regardless, submittal of a RCRA 3016 report should not have resulted in listing the entire Toiyabe National Forest on the docket. The Leviathan Mine site is being cleaned up by the responsible parties at the site under Unilateral Administrative Orders issued by EPA Region 9, and is not classified as a Federal facility in CERCLIS. The site is primarily owned by the State of California, and is managed by the Lohontan Regional Water Quality Control Board. USDA Forest Service has jurisdiction over less than 10 percent of the site, with primary involvement being as a Natural Resources Trustee.

The Northumberland Mine site is a GML mixed ownership mine site that is now totally privately owned. USDA asserts that the RCRA 3016 report for the Northumberland Mine site may have been submitted in error, but regardless, submittal of a RCRA 3016 report should not have resulted in listing the entire Toiyabe National Forest on the docket. The Northumberland Mine site has been cleaned up and reclaimed by the mine operators, and has been given No Further Remedial Action Planned (NFRAP) status by EPA. The site is not classified as a Federal facility in CERCLIS, and USDA has no involvement at the site.

The U.S. Marine Corps Mountain Warfare Training Center occupies 46,000 acres of the Toiyabe National Forest and use of the land is permitted by letter of agreement with USDA Forest Service. RCRA 3016 reports have been filed by USDA as well as by the United States Department of the Interior. The U.S. Marine Corps Mountain Warfare Training Center is not a USDA facility, and is already listed on the docket as a United States Department of the Navy installation.

Regardless of whether it was appropriate to submit the RCRA 3016 reports for the Leviathan Mine site and the Northumberland Mine site, such reporting should not have resulted in listing the entire Toiyabe National Forest on the docket. Because the Leviathan Mine site and the Northumberland Mine site are GML mixed ownership mine sites that the June 2003 EPA policy was intended to address, because the two mine sites are cleaned up or are being cleaned up with no current USDA involvement at the mine sites, and because the U.S. Marine Corps Mountain Warfare Training Center is not a USDA facility and is already listed on the docket as a United States Department of the Navy installation, the Toiyabe National Forest is being deleted from the docket.

2.3 Corrections

Changes necessary to correct the previous docket were identified by both EPA and Federal agencies. The changes needed varied from simple changes in addresses or spelling to corrections of the recorded name and ownership of a facility. In addition, some changes in the names of facilities were made to establish consistency in the docket. Many new entries are simply corrections of typographical errors. For each facility for which a correction has been entered, the original entry (designated by an ''O''), as it appeared in the February 12, 1988 notice or subsequent updates, is shown directly below the corrected entry (designated by a ''C'') for easy comparison.

Lewis and Clark National Forest and Humboldt National Forest are among the sites EPA is correcting on the docket today. Addressing entire National Forests as single Federal facilities on the docket has created administrative and technical difficulties, and has caused confusion with the public. For example, State regulators have asked USDA to pinpoint the actual facilities of concern for National Forests listed on the docket, knowing that an entire National Forest cannot be the source. Contamination causing concern usually covers only a small fraction of a listed National Forest, and conducting a PA of an entire National Forest is not feasible. EPA believes, where appropriate, in instances where an entire National Forest has been listed as a single facility on the docket, it is reasonable to narrow the docket listing by examining the reporting mechanism which is the likely source for the original docket listing. However, this action does not mean that the particular National Forest is free, in its entirety, from contamination of concern. Nor does this action relieve USDA Forest Service from notification requirements to EPA of any site on land under the jurisdiction of USDA Forest Service where there is a release or a threatened release.

2.3.1 Lewis and Clark National Forest

Lewis and Clark National Forest Site was added to the docket on February 12, 1988. Located in five large areas that encompass five USDA Forest Service Ranger Districts across five distinct mountain ranges of Montana, the gross acreage within the established external boundaries of the Lewis and Clark National Forest is approximately 2.0 million acres of which approximately 1.9 million acres are under the jurisdiction of USDA Forest Service. A total of approximately 140,000 acres within the external boundaries of the

Lewis and Clark National Forest are private land inholdings, not under USDA Forest Service jurisdiction, including a portion of the Hughesville/Block P Millsite.

Addressing the approximately 2.0 million-acre Lewis and Clark National Forest as a single Federal facility on the docket has created administrative and technical difficulties, and has caused confusion with the public. EPA believes, where appropriate, in instances where an entire National Forest has been listed as a single facility on the docket, it is reasonable to narrow the docket listing by examining the reporting mechanism which is the likely source for the original docket listing. The published reporting mechanism leading to the listing of the entire Lewis and Clark National Forest on the docket is the RCRA Section 3016 reporting of Federal agency hazardous waste facilities by USDA. RCRA Section 3016 reports were submitted for the Hughesville/Block P Millsite and the Belt Creek Civilian Conservation Corps (CCC) Camp.

The Hughesville/Block P Millsite is an Abandoned Mine Site (AMS) that is a GML mixed ownership milling facility that was in use off and on for almost 100 years. USDA asserts that the RCRA 3016 report for the Hughesville/Block P Millsite may have been in error, but regardless, submittal of a RCRA 3016 report should not have resulted in listing the entire Lewis and Clark National Forest on the docket. Because a portion of the mill tailings at the site are located on USDA Forest Service lands and because the releases of hazardous substances from the site affect USDA Forest Service resources, EPA designated USDA Forest Service as the lead agency for and oversight of the removal action at the Hughesville/Block P Millsite. The site is on the NPL, and an Engineering Evaluation/Cost Analysis was completed through an Administrative Order on Consent issued jointly by USDA and EPA to one responsible party for the contamination at the Hughesville/Block P Millsite. Earlier this year, EPA concurred with USDA's proposal to exercise authority under CERCLA Section 106 at the Hughesville/Block P Millsite, and USDA subsequently issued a Unilateral Administrative Order to a responsible party ordering the company to conduct a non-time critical removal action at the site to further the cleanup process.

The Belt Creek CCC Camp is on land under the jurisdiction of USDA Forest Service. The U.S. Army operated the CCC camp, treating fence posts and telephone poles, from around 1934 until sometime between 1939 and 1942. The last building was removed from the CCC camp by 1948, and USDA Forest Service completed a preliminary assessment of the Belt Creek CCC Camp in 1988. This site is currently being evaluated by USDA Forest Service, and additional sampling, analysis, and corrective action may be necessary, pending the evaluation and review by EPA. USDA's position is that the fact that USDA submitted a RCRA 3016 report for the Belt Creek CCC Camp should not necessarily result in listing the entire Lewis and Clark National Forest on the docket.

Regardless of whether it was appropriate to submit the RCRA 3016 reports for the Hughesville/Block P Millsite and the Belt Creek CCC Camp, such reporting should not have resulted in listing the entire Lewis and Clark National Forest on the docket. Because the Hughesville/Block P Millsite is a GML mixed ownership mine site that the June 2003 EPA policy was intended to address, and because the Hughesville/Block P Millsite, which is also an NPL site, is being cleaned up with USDA Forest Service as lead agency, the docket listing for the Lewis and Clark National Forest is being corrected to narrow the listing to the Belt Creek CCC Camp.

2.3.2 Humboldt National Forest

Humboldt National Forest was added to the docket on December 15, 1989. Located in several distinct and scattered areas across northeastern Nevada, the gross acreage within the established external boundaries of the Humboldt National Forest is approximately 2.6 million acres of which approximately 2.5 million acres are under the jurisdiction of the USDA Forest Service. A total of approximately 139,000 acres within the external boundaries of the Humboldt National Forest are private land inholdings, not under USDA Forest Service jurisdiction, including the Buckskin Mine site, and the Rio Tinto Mine site. (The Rio Tinto Mine site is listed separately on the docket as the Rio Tinto Copper Mine and was previously discussed in the Section 2.2 of this Notice.)

Addressing the approximately 2.6 million-acre Humboldt National Forest as a single Federal facility on the docket has created administrative and technical difficulties, and has caused confusion with the public. EPA believes, where appropriate, in instances where an entire National Forest has been listed as a single facility on the docket, it may make sense to narrow the docket listing by examining the reporting mechanism which is the likely source for the original docket listing. The published reporting mechanism that lead to the listing of the entire Humboldt National Forest on the docket is the RCRA Section 3016 reporting of Federal agency hazardous waste facilities by USDA. RCRA Section 3016 reports were submitted for the Rio Tinto Mine site and the Buckskin Mine site.

The Rio Tinto Mine site is a GML mixed ownership mine site that is primarily privately held. USDA asserts that the RCRA 3016 report for the Rio Tinto Mine site may have been submitted in error, but regardless, submittal of a RCRA 3016 report should not have resulted in listing the entire Humboldt National Forest on the docket. The Rio Tinto Mine site is being cleaned up through a series of Administrative Orders on Consent between the responsible parties and the State of Nevada, and the cleanup is a State-lead action. USDA conducted a land exchange with one of the responsible parties to reduce the administrative burden on the State and Federal agencies involved in the cleanup. The land exchange also clarified jurisdictional concerns so that response actions could proceed. USDA Forest Service is a Natural Resources Trustee at the site, and the only other USDA involvement at the site is to maintain a 60-foot right-of-way through the property. The site is not classified as a Federal facility in CERCLIS.

The Buckskin Mine site is GML mine site that is completely under the jurisdiction of USDA Forest service. USDA asserts that the RCRA 3016 report for the Buckskin Mine site may have been in error, but regardless, submittal of a RCRA 3016 report should not have resulted in listing the entire Humboldt National Forest on the docket. EPA is designating the Buckskin Mine a NFRAP status site, and no further cleanup is anticipated.

Regardless of whether it was appropriate to submit the RCRA 3016 reports for the Rio Tinto Mine site and the Buckskin Mine site, such reporting should not have resulted in listing the entire Humboldt National Forest on the docket. Because the Rio Tinto Mine site is a GML mixed ownership mine site that the June 2003 EPA policy was intended to address, and because the two mine sites are cleaned up or are being cleaned up with no current USDA involvement at the mine sites, the docket listing for the Humboldt National Forest is being corrected to narrow the listing to the Buckskin Mine site. Although the Buckskin Mine site is a GML site, it is not a mixed ownership mine site that the June 2003 EPA policy was intended to address. Thus, the site is not appropriate for deletion from the

docket, the docket listing for the Humboldt National Forest is being corrected to narrow the listing to the Buckskin Mine site, and the site is being given NFRAP status by EPA.

3.0 Process for Compiling the Updated Docket

In compiling the newly reported facilities for the update being published today, EPA extracted the names, addresses, and identification numbers of facilities from four EPA databases—ERNS, the Biennial Inventory of Federal Agency Hazardous Waste Activities, the Resource Conservation and Recovery Information System (RCRAInfo), and the Comprehensive Environmental Response, Compensation, and Liability Information System (CERCLIS)—that contain information about Federal facilities submitted under the four provisions listed in CERCLA section 120(c).

Extensive computer checks compared the current docket list with the information obtained from the databases identified above to determine which facilities were, in fact, newly reported and qualified for inclusion on the update. In spite of the quality assurance efforts EPA has undertaken, State-owned or privately owned facilities that are not operated by the Federal government may have been included. Such problems are caused by procedures historically used to report and track data on Federal facilities; EPA is working to resolve them. Representatives of Federal agencies are asked to write to EPA's docket coordinator at the following address if revisions of this update information are necessary: Joshua Barber, Federal Agency Hazardous Waste Compliance Docket Coordinator, Federal Facilities Restoration and Reuse Office (Mail Code 5106G), U.S. Environmental Protection Agency, 1200 Pennsylvania Avenue NW., Washington, DC 20004.

4.0 Facilities Not Included

As explained in the preamble to the original docket (53 FR 4280), the docket does not include the following categories of facilities (note, however, that any of these types of facilities may, when appropriate, be listed on the NPL):

- Facilities formerly owned by a Federal agency and now privately owned will not be listed on the docket. However, facilities that are now owned by another Federal agency will remain on the docket and the responsibility for conducting PAs and SIs will rest with the current owner.
- SQGs that have never produced more than 1,000 kg of hazardous waste in any single month and that have not reported releases under CERCLA section 103 or hazardous waste activities under RCRA section 3016 will not be listed on the docket.
- Facilities that are solely transporters, as reported under RCRA section 3010, will not be listed on the docket.

5.0 Facility Status Reporting

EPA has expanded the docket database to include information on the NFRAP status of listed facilities. Indicating NFRAP status allows easy identification of facilities that, after submitting all necessary site assessment information, were found to warrant no further involvement on the part of EPA at the time of the status change. Accordingly, the docket database includes the following facility status codes:

U = Undetermined.
N = No further remedial action planned (NFRAP).

NFRAP is a term used in the Superfund site assessment program to identify facilities for which EPA has found that currently available information indicates that listing on the NPL is not likely and further assessment is not appropriate at the time. NFRAP status does not represent an EPA determination that no environmental threats are present at the facility or that no further environmental response action of any kind is necessary. NFRAP status means only that the facility does not appear, from the information available to EPA at this time, to warrant listing on the NPL and that, therefore, EPA anticipates no further involvement by EPA in site assessment or cleanup at the facility. However, additional CERCLA response actions by the Federal agency that owns or operates the facility, whether remedial or removal actions, may be necessary at a facility that has NFRAP status. The status information contained in the docket database is the result of Regional evaluation of information taken directly from CERCLIS. (CERCLIS is a database that helps EPA Headquarters and Regional personnel manage sites, programs, and projects. It contains the official inventory of all CERCLA (NPL and non-NPL) sites and supports all site planning and tracking functions. It also integrates financial data from preremedial, remedial, removal and enforcement programs.) The status information was taken from CERCLIS and sent to the Regional docket coordinators for review. The results of those reviews were incorporated into the status field in the docket database. Subsequently, an updated list of facilities having NFRAP status (those for which an ''N'' appears in the status field) was generated; the list of updates since the previous publication of the docket is being published today.

Important limitations apply to the list of facilities that have NFRAP status. First, the information is accurate only as of September 13, 2004. Second, a facility's status may change at any time because of any number of factors, including new site information or changing EPA policies. Finally, the list of facilities that have NFRAP status is based on Regional review of CERCLIS data, is provided for information purposes only, and should not be considered binding upon either the Federal agency responsible for the facility or EPA.

The status information in the docket database will be reviewed and a new list of facilities classified as NFRAP will be published at each docket update.

6.0 Information Contained on Docket Listing

As discussed above, the update information below is divided into three separate sections. The first section is a list of new facilities that are being added to the docket. The second section is a list of facilities that are being deleted from the docket. The third section comprises corrections of information included on the docket. Each facility listed for the update has been assigned a code(s) that indicates a more specific reason(s) for the addition, deletion, or correction. The code key precedes the lists.

SARA, as amended by the Defense Authorization Act of 1997, specifies that, for each Federal facility that is included on the docket during an update, evaluation shall be completed in accordance with a reasonable schedule. Therefore, all facilities on the additions list to this fifteenth docket update must submit a PA and, if warranted, an SI to EPA. The PA must include existing information about a site and its surrounding environment, including a thorough examination of human, food-chain, and environmental targets, potential waste sources, and migration pathways. From information in the PA or other information coming to EPA's attention, EPA will determine whether a follow-up SI is required. An SI augments the data collected in a PA. An SI may reflect sampling and other field data that are used to determine whether further action or investigation is appropriate. This policy includes any facility for which there is a change in the identity of the responsible Federal agency. The reports should be submitted

to the Federal facilities coordinator in the appropriate EPA Regional office.

The facilities listed in each section are organized by State and then grouped alphabetically within each State by the Federal agency responsible for the facility. Under each State heading is listed the name and address of the facility, the Federal agency responsible for the facility, the statutory provision(s) under which the facility was reported to EPA, and the correction code(s).

The statutory provisions under which a facility reported are listed in a column titled ''Reporting Mechanism.'' Applicable mechanisms are listed for each facility: for example 3010, 3016, and 103(c).

The complete list of Federal facilities that now make up the docket and the complete list of facilities classified as no further remedial action planned (NFRAP) are not being published today. However, the lists are available to interested parties and can be obtained at *http://www.epa.gov/compliance/cleanup/federal/index.html* or by calling the HQ Docket Coordinator at (703) 603–0265. As of today, the total number of Federal facilities that appear on the docket is 2,291.

Dated: December 14, 2004.

David J. Kling,

Director, Federal Facilities Enforcement Office.

Docket Revisions

Categories of revisions for docket update by correction code.

Categories for Deletion of Facilities

(1) Small-Quantity Generator.
(2) Not Federally Owned.
(3) Formerly Federally Owned.
(4) No Hazardous Waste Generated.
(5) (This correction code is no longer used.)
(6) Redundant Listing/Site on Facility.
(7) Combining Sites Into One Facility/Entries Combined.
(8) Does Not Fit Facility Definition.
(9) (This correction code is no longer used.)
(10) (This correction code is no longer used.)
(11) (This correction code is no longer used.)
(12) (This correction code is no longer used.)
(13) (This correction code is no longer used.)
(14) (This correction code is no longer used.)

Categories for Addition of Facilities

(15) Small-Quantity Generator With Either a RCRA 3016 or CERCLA 103 Reporting Mechanism.
(16) One Entry Being Split Into Two/Federal Agency Responsibility Being Split.
(17) New Information Obtained Showing That Facility Should Be Included.
(18) Facility Was a Site on a Facility That Was Disbanded; Now a Separate Facility.
(19) Sites Were Combined Into One Facility.
(19A) New Facility.

Categories for Corrections of Information About Facilities

(20) Reporting Provisions Change.
(20A) Typo Correction/Name Change/Address Change.
(21) Changing Responsible Federal Agency (New Responsible Federal Agency Must Submit proof of previously performed PA, which is subject to approval by EPA).
(22) Changing Responsible Federal Agency and Facility Name (New Responsible Must Submit proof of previously performed PA, which is subject to approval by EPA).
(23) New Reporting Mechanism Added at Update.
(24) Reporting Mechanism Determined To Be Not Applicable After Review of Regional Files.

Note: Further information on definitions of categories can be obtained by calling Joshua Barber, the HQ Docket Coordinator at (703) 603–0265.

FEDERAL AGENCY HAZARDOUS WASTE COMPLIANCE DOCKET UPDATE #20—ADDITIONS

Facility name	Address	City	State	Zip code	Agency	Reporting	Code
FS–Tongass NF: North Saginaw Bay LTF and Camp FS–Tongass NF: Mahoney Mine.	Lat 56 51.57 N Kuiu Island W of T74S R91E S25.	Kake Ketchikan	AK AK	99830 99901	Agriculture. Agriculture.	3010 103c	19A 19A
FS–Tongass NF: East Side Sitkoh Bay (LTF).	Lat 57 31.19 N Chichagof Island.	Sitka	AK	99835	Agriculture.	3010	19A
FS–Tongass NF: Ratz Harbor Shop Site.	T69S R84E S18	Thorne Bay	AK	99919	Agriculture.	103c	19A
FS–Chugach NF: Mineral King Mine.	T10N R6E Sec 14, 15, 23	Whittier	AK	99693	Agriculture.	103c	19A
Dubuque Naval Reserve Station.	10677 Airport Rd	Dubuque	IA	52003	Navy	3010	19A
Omaha (EX) AF Sta Z–71	4 Miles Northwest of Omaha, NE.	Omaha	NE	68108	Transportation.	103c	19A
US DOI BIA Cook Creek Field Station.	32 Shop Road	Humptulips	WA	98552	Interior	3010	19A

FEDERAL AGENCY HAZARDOUS WASTE COMPLIANCE DOCKET UPDATE #20—DELETIONS

Facility name	Address	City	State	Zip code	Agency	Reporting	Code
Washington Headquarters	600 Independence Ave, SW.	Washington	DC	20546	General Services Administration.	3010	6
Crystal Lake Postal Service.	301 E Congress Pkwy	Crystal Lake	IL	60060	Postal Service	3010	4
Fort Ritchie-Raven Rock Site (AJCC).	Harbaugh Valley Rd	Blue Ridge Summit.	MD	17214	Army	3016	6
Brookmont Defense Mapping Agency HTC.	6101 Macarthur Blvd	Brookmont	MD	20816	Army	3010	6
Annapolis Naval Station	Old Severn River Bridge	Annapolis	MD	21402	Navy	3005 3010 3016 103c	6

FEDERAL AGENCY HAZARDOUS WASTE COMPLIANCE DOCKET UPDATE #20—DELETIONS—Continued

Facility name	Address	City	State	Zip code	Agency	Reporting	Code
Washington Naval Communication Unit.	Dangerfield & Commo Rd	Clinton	MD	20735	Navy	3010 103c	6
Santa Fe NF: Terrero Mine Tailings.		Santa Fe	NM	87504	Agriculture	3016	8
Rio Tinto Copper Mine	Sec 10 & 11 T45N R53E MDM.	Mountain City	NV	89831	Agriculture	103c	8
Toiyabe National Forest	1200 Franklin Way	Sparks	NV	89431	Agriculture	103c 3016	8
MSHA	PO Box 10940	Pittsburgh	PA	15236	Labor	3010 103c 3016	6

FEDERAL AGENCY HAZARDOUS WASTE COMPLIANCE DOCKET UPDATE #20—CORRECTIONS

Facility name	Address	City	State	Zip code	Agency	Reporting mechanism	Code
c Bolling Air Force Base	5 Capital Street	Washington	DC	20336	Air Force	103c 3016	20A
o Bolling Air Force Base	HQ 110th Air Base Wing 5 Capital St.	Washington	DC	20331	Air Force	103c 3016	
c SE Federal Center (Washington).	2nd and M Street, SE	Washington	DC	20407	General Services Administration.	3010 103c	20A
o Washington Office	2nd and M Street, SE	Washington	DC	20407	General Services Administration.	3010 103c	
c U.S. Government Printing Office.	732 N Capitol Street, NW	Washington	DC	20401	Government Printing Office.	3010 3005	20A, 21
o U.S. Government Printing Office.	N Capitol Street, NW	Washington	DC	20401	General Services Administration.	3010 3005	
c New Castle Training Site-Rifle Range.	12 Pennsway Greater Wilmington Airport.	New Castle	DE	19720	Army	3016	20A
o New Castle Training Site-Rifle Range.	Bldg 1A 1197 River Rd	New Castle	DE	19720	Army	3016	
c Brandywine DRMO	Rt 381 Brandywine Road	Brandywine	MD	20613	Air Force	3010 3016	20A
o Brandywine Salvage Yard.	Rt 381 Brandywine Road	Brandywine	MD	20613	Air Force	3010 3016	
c Adelphi Laboratory Center (Harry Diamond Lab).	2800 Powder Mill Road	Adelphi	MD	20783	Army	3005 3010 3016 103c	20A
o Adelphi Laboratory Center.	2800 Powder Mill Road	Adelphi	MD	20783	Army	3005 3010 3016 103c	20A
c Walter Reed Army Medical Center (Forest Glen).	2461 Linden Lane	Silver Spring	MD	20910	Army	3010 103c	20A
o Walter Reed Army Medical Center.	2461 Linden Lane	Silver Spring	MD	20910	Army	3010 103c	
c National Marine Fisheries Service-Oxford Lab.	U.S. Dept of Marine Fisheries, Oxford Laboratory.	Oxford	MD	21654	Commerce	103c 3010	20A
o Oxford National Marine Fisheries Service.	U.S. Dept of Marine Fisheries Oxford Laboratory.	Oxford	MD	21654	Commerce	103c 3010	
c Chesapeake Beach Detachment-Naval.	5812 Bayside Rd	Chesapeake	MD	20732	Navy	3010	20A
o Chesapeake Beach Detachment-Naval.	5813 Bayside Rd	Chesapeake Beach.	MD	20732	Navy	3010	
c Belt Creek CCC Camp	T14N R7E Sec 1	Neihart	MT	59465	Agriculture	103c 3016	20A
o Lewis & Clark National Forest.	Box 871	Great Falls	MT	59403	Agriculture	103c 3016	
c Buckskin Mine	Humboldt Natl Forest-Winnemuca Ranger D..	Elko	NV	89822	Agriculture	103c 3016	20A
o Humbolt National Forest.	967 Mountain City Hwy	Elko	NV	89801	Agriculture	103c 3016	
c Fort Ritchie	Harbaugh Valley Rd	Blue Ridge Summit.	PA	17214	Army	3010	20A
o AJCC-Fort Ritchie	Harbaugh Valley Rd	Blue Ridge Summit.	PA	17214	Army	3010	
c US Bureau of Mines	626 Cochrans Mill	Bruceton	PA	15025	Interior	3010 103c 3016	20A
o BM-Bruceton	626 Cochrans Mill	Bruceton	PA	15025	Interior	3010 103c 3016	
c Navy Ships Parts Control.	5450 Carlisle Pike PO Box 2020.	Mechanicsburg	PA	17055	Navy	3005 3010 3016 103c	20A

FEDERAL AGENCY HAZARDOUS WASTE COMPLIANCE DOCKET UPDATE #20—CORRECTIONS—Continued

Facility name	Address	City	State	Zip code	Agency	Reporting mechanism	Code
o Mechanicsburg Navy Ships Parts Control Center.	5450 Carlisle Pike PO Box 2020.	Mechanicsburg	PA	17055	Navy	3005 3010 3016 103c	
c Naval Regional Medical Center.	17 St and Pattison Ave	Philadelphia	PA	19145	Navy	3010 3016	20A
o Philadelphia Naval Regional Medical Center.	17 St and Pattison Ave	Philadelphia	PA	19145	Navy	3010 3016	
c Navy Aviation Supply Office.	700 Robbins Ave	Philadelphia	PA	19111	Navy	3010 3016	20A
o Philadelphia Navy Aviation Supply Office.	700 Robbins Ave	Philadelphia	PA	19111	Navy	3010 3016	
c Medical Center	University and Woodland Ave.	Philadelphia	PA	19104	Veterans Affairs	3010 103a 3016	20A
o Philadelphia Medical Center.	University and Woodland Ave.	Philadelphia	PA	19104	Veterans Affairs	3010 103a 3016	
c Morgantown Energy Technology Center.	3610 Collins Ferry Rd	Morgantown	WV	26505	Energy	3010 103c 3016	20A
o National Energy Technology Laboratory.	3610 Collins Ferry Rd	Morgantown	WV	26505	Energy	3010 103c 3016	
c Naval Radio Station #1	63 Hedrick Dr	Sugar Grove	WV	26815-5000	Navy	3010 3016 103c	20A
o Naval Security Group Activity Sugar Grove-Main.	63 Hedrick Dr	Sugar Grove	WV	26815-5000	Navy	3010 3016 103c	
c Naval Radio Station #2	Randall Road, off State Road 21.	Sugar Grove	WV	26815	Navy	103c	20A
o Naval Security Group Activity Sugar Grove—.	Randall Road, off State Road 21.	Sugar Grove	WV	26815	Navy	103c	
c Fort Belvoir—US Army Engineering Center.	9430 Jackson Loop	Fort Belvoir	VA	22060-5130	Army	3005 3010 3016 103c	20A
o US Army Engineering Center Fort Belvoir.	9430 Jackson Loop	Fort Belvoir	VA	22060-5130	Army	3005 3010 3016 103c	
c NASA Wallops Island	Rte 175	Wallops Island	VA	23337	NASA	3010 103a 103c 3016	20A
o Goddard Space Flight Center Wallops Flight.	Rte 175	Wallops Island	VA	23337	NASA	3010 103a 103c 3016	
c USN Auxilary Landing Field.	3–4 Mi S Princess Ann CTH.	Chesapeake	VA	23322	Navy	103c 3016	20A
o Chesapeake Auxilary Landing Field F.	3–4 Mi S Princess Ann CTH.	Chesapeake	VA	23322	Navy	103c 3016	
c Norfolk Naval Base (Sewells Point Naval).	1530 Gilbert St Ste 2000	Norfolk	VA	23511	Navy	3005 3010 3016 103c	20A
o NAVSTA Norfolk	1530 Gilbert St Ste 2000	Norfolk	VA	23511	Navy	3005 3010 3016 103c	
c Suffolk Naval Communication Area.	3300 Sleepy Hole Rd	Suffolk	VA	23434	Navy	3010 3016 103c	20A
o Suffolk Naval Communication Area.	3300 Sleepy Hole Rd	Suffolk	VA	23434	Navy	3010 3016 103c	
c Camp Peary DoD	Camp Peary-PO Box 1447	Williamsburg	VA	23185	Navy	3010 3016 103c	20A
o Williamsburg Armed Forces Exper Training.	Camp Peary-PO Box 1447	Williamsburg	VA	23185	Navy	3010 3016 103c	

Note: For each facility for which a correction has been entered, the original entry (designated by an "O"), as it appeared in the February 12, 1988 notice or subsequent updates, is shown directly below the corrected entry (designated by a "C") for easy comparison.

FEDERAL AGENCY HAZARDOUS WASTE COMPLIANCE DOCKET UPDATE #20—NFRAP STATUS CHANGES

Facility name	Address	City	State	Zip code	Agency	Reporting mechanism	NFRAP status
FS–Tongass NF: East 12 Mile Site.	W Side of FS Rd 2120, 35 Mi SE of Craig, T75S R83E.	Craig	AK	99921	Agriculture	103c	N

FEDERAL AGENCY HAZARDOUS WASTE COMPLIANCE DOCKET UPDATE #20—NFRAP STATUS CHANGES—Continued

Facility name	Address	City	State	Zip code	Agency	Reporting mechanism	NFRAP status
FS–Tongass NF: Apex Mine.	S13, Copper River Meridian T45S R56E S13, 23, 24 +57°57′01″ N, −136°17′45″ W.	Pelican	AK	99832	Agriculture	103c	N
FS–Tongass NF: El Nido Mine.	T45S R56E S13,13,24 +57°56′56″ N, −136°17′01″ W.	Pelican	AK		Agriculture	103c	N
FS–Tongass NF: Ratz Harbor Shop Site.	T69S R84E S18	Thorne Bay	AK	99919	Agriculture	103c	N
FS–Chugach NF: Mineral King Mine.	T10N R6E Sec 14, 15, 23	Whittier	AK	99693	Agriculture	103c	N
National Arboretum	3501 New York Avenue NE.	Washington	DC	20002	Agriculture	103c 3016	N
Hubert H. Humphrey Building.	200 Independence Avenue, SW.	Washington	DC	20201	General Services Administration.	3016 103c	N
Food & Drug Administration FB 8.	200 C St SW HFF–14 Rm 6025.	Washington	DC	20204	Health and Human Services.	3010 103c	N
NPS–Washington Gas and Light Site.	1900 Anacostia Drive, SE	Washington	DC	20020	Interior	103c	N
Anacostia Naval Station	2701 South Capitol Street SW.	Washington	DC	20374	Navy	3010 103c 3016	N
IRS–Washington	1111 Constitution Ave, NW.	Washington	DC	20032	Treasury	103a	N
Hines Supply Depot	1st Ave and 21st St	Hines	IL	60141	Veterans Affairs	103c 3010	N
Adelphi Laboratory Center (Harry Diamond Lab).	2800 Powder Mill Rd	Adelphi	MD	20783	Army	3005 3010 3016 103c	N
Phoenix Control (Nike)	Sunnybrook Road	Jacksonville	MD	21131	Army	3016 103c 3010	N
National Institute of Standards and Technology.	Quince Orchard Rd	Gaithersburg	MD	20760	Commerce	3005 3010 103c	N
National Marine Fisheries Service–Oxford Lab.	U.S. Department of Marine Fisheries.	Oxford	MD	21654	Commerce	103c 3010	N
David Taylor/Annapolis–Control.	640A Broadneck Road	Annapolis	MD	21401	Defense	103c 3010	N
Davidsonville–Launch	3737 Elmer Hagner Lane	Davidsonville	MD	21035	Defense	103c	N
Rockville–Control	10901 Darnstown Road	Gaithersburg	MD	20878	Defense	103c	N
Rockville–Launch	Muddy Branch	Gaithersburg	MD	20879	Defense	103c	N
Fork–Control	End of Hutschenreuter Road.	Glen Arm	MD	21057	Defense	103c	N
Greenspring–Control	Greenspring Road	Greenspring	MD	21117	Defense	103c	N
Greenspring–Launch	Ridge Road	Greenspring	MD	21117	Defense	103c	N
Tolchester–Control	Tolchester Beach Rd	Tolchester	MD	21661	Defense	103c	N
Croom–Control	15100 Mt Calvert Rd	Upper Marlboro	MD	20772	Defense	103c	N
Waldorf Naval Research Laboratory–Control.	End of Laurel Branch Drive.	Waldorf	MD	20601	Defense	103c	N
Central Regional Laboratory.	839 Bestgate Road	Annapolis	MD	21401	EPA	3010 103c	N
NIH–Bethesda	9000 Rockville Pike	Bethesda	MD	20892	Health and Human Services.	3005 3010 3016 103c	N
Back Creek Rear Range Coast Guard Structure.	25 Ft Square Position	Chesapeake City	MD	21915	Homeland Security	103c	N
Goddard Space Flight Center.	Greenbelt Road	Greenbelt	MD	20771	NASA	3010 103c 3016	N
Naval Communication Unit Washington.	Dangerfield & Commo Road.	Clinton	MD	20735	Navy	103a 103c 3010	N
Charlevoix Coast Guard Station.	220 Coastguard Road	Charlevoix	MI	49720	Homeland Security	3010 103c	N
Buckskin Mine	Humboldt Natl Forest–Winnemuca Ranger D.	Elko	NV	89822	Agriculture	103c 3016	N
Dayton Medical Center	4100 West 3rd Street, Building 330.	Dayton	OH	45428	Veterans Affairs	103a 3010	N
Allegheny National Forest	222 Liberty Street Box 847.	Warren	PA	16365	Agriculture	103c 3016	N
Eastern Regional Research Center.	600 East Mermaid Lane	Wyndmoor	PA	19038	Agriculture	3010 103c 3016	N
Keystone Training Area	Greenwood Twp	Geneva	PA	16316	Army	103c	N
Hays Army Ammunition Plant.	300 Mifflin Road	Pittsburgh	PA	15207	Army	3016 103c	N

FEDERAL AGENCY HAZARDOUS WASTE COMPLIANCE DOCKET UPDATE #20—NFRAP STATUS CHANGES—Continued

Facility name	Address	City	State	Zip code	Agency	Reporting mechanism	NFRAP status
Valley Forge Army Hospital.	Evergreen Drive	Schuylkill	PA	19460	Army	103c	N
Scranton Army Ammunition Plant.	156 Cedar Ave	Scranton	PA	18501	Army	3005 3010 3016 103c	N
Defense Distribution Region East.	Harrisburg	New Cumberland	PA	17070	Defense Logistics Agency.	3005 3010 3016 103c	N
NPS–Valley Forge National Historic Park.	Rte 23	Valley Forge	PA	19481	Interior	103c 3010	N
Edgely Manor Industrial Park (Simon Site).	Silvi Avenue	Bristol Township	PA	19007		103c	N
Sun Oil Co.–Chevron International Corp.	3001 Penrose Avenue	Philadelphia	PA	19145		103c	N
Tennessee Gas Pipeline	Turkey Run (Station 319)	Wyalusing	PA	18853		3010	N
164th Airlift Wing		Memphis	TN	37000	Air Force	3010	N
US Coast Guard (Ouachita) Shoreside.	3551 Old Harrison Pike	Chattanooga	TN	37416	Homeland Security	3010	N
Cameron Station	5010 Duke St	Alexandria	VA	22314	Army	3010 3016 103c	N
Arlington Hall Station	U.S. Army	Warrenton	VA	22186	Army	3010 103c	N
John H. Kerr Reservoir	Route 1 Box 76	Boydton	VA	23917	Corps of Engineers, Civil.	3010 103c 3016	N
Portsmouth Coast Guard Support Center.	4000 Coast Guard Blvd	Portsmouth	VA	23703	Homeland Security	3010 103c	N
Portsmouth Naval Hospital	Effingham Street	Portsmouth	VA	23708	Navy	3010 3016 103c	N
Sutton Enterprises Inc.	1067 "A" Alexandria Lane.	Chesapeake	VA	23320		103c 3010	N
New England Log Homes	Old Route 58 West	Lawrenceville	VA	23868		103c	N
Camp Wesley Harris Marine Facility.	Seabeck Hwy 3 Mi W of Cy.	Bremerton	WA	98310	Navy	103c 3010	U
Nicolet NF: County Trunk Highway "T" Site.	Section 3 T31N R15E	Doty Township	WI	54149	Agriculture	103c	N
Winfield Locks & Dams	RFD #1 Box 530	Red House	WV	25168	Corps of Engineers, Civil.	103c 3010	N
Point Pleasant Defense National Stockpile Center.	2601 Madison Ave.	Point Pleasant	WV	25550	Defense	103c	N
Morgantown Energy Technology Center.	West Virginia Secondary Route 9.	Rocket Center	WV	26726	Energy	3005 3010 3016 103c	N
Martinsburg Hospital	Route 9	Martinsburg	WV	25401	Veterans Affairs	103c	N
Cytec Industries Chemical Fire.	Route 2 South	Belmont	WV	26134		103c	N
Iaeger PCB Site	Near Lick Branch	Iaeger	WV			103c	N

[FR Doc. 04–27770 Filed 12–17–04; 8:45 am]

BILLING CODE 6560–50–P

EXPORT-IMPORT BANK

[Public Notice 69]

Agency Information Collection Activities: Submission for OMB Review: Comment Request

AGENCY: Export-Import Bank of the United States (Ex-Im Bank).

ACTION: Notice and request for comments.

SUMMARY: The Export-Import Bank, as a part of its continuing effort to reduce paperwork and respondent burden, invites the general public and other Federal agencies to comment on the proposed information collection required by the Paperwork Reduction Act of 1995. The purpose of the survey is to fulfill a statutory mandate (The Export-Import Bank Act of 1945, as amended 12 U.S.C. 635) which directs Ex-Im Bank to report annually to the U.S. Congress any action taken toward providing export credit programs that are competitive with those offered by official foreign export credit agencies. The Act further stipulates that the annual report on competitiveness should include the results of a survey of U.S. exporters and U.S. commercial lending institutions which provide export credit to determine their experience in meeting financial competition from other countries whose exporters compete with U.S. exporters. Accordingly, Ex-Im Bank is requesting that the proposed survey (EIB No. 00–02) be administered via its Web site to exporters and bankers that use Ex-Im Bank's medium and long-term programs, requesting them to evaluate the competitiveness of Ex-Im Bank's programs *vis-á-vis* foreign export credit agencies.

DATES: Written comments should be received on or before January 19, 2005, to be assured of consideration.

ADDRESSES: Direct all requests for additional information to Alan Jensen, Export-Import Bank of the U.S., 811 Vermont Avenue, NW., Washington, DC 20571, (202) 565–3767. Address all comments to David Rostker, Office of

Management and Budget, Office of Information and Regulatory Affairs, NEOB, Room 10202, Washington, DC 20502, (202) 395–3897.

SUPPLEMENTARY INFORMATION:

With respect to the proposed collection of information, Ex-Im Bank invites comments as to:

—Whether the proposed collection of information is necessary for the proper performance of the functions of Ex-Im Bank, including whether the information will have a practical use;

—The accuracy of Ex-Im Bank's estimate of the burden of the proposed collection of information, including the validity of the methodology and assumptions used;

—Ways to enhance the quality, usefulness, and clarity of the information to be collected; and

—Ways to minimize the burden of collection of information on those who are to respond, including through the use of appropriate automated electronic, mechanical or other technological collection techniques or other forms of information technology; *e.g.*, permitting electronic submission of responses.

Title & Form Number: Annual Competitiveness Report Survey of Exporters and Bankers, EIB Form 00–02.

OMB Number: 3048–0004.

Type of Review: Reinstatement, with change, of a previously approved collection.

Annual Number of Respondents: 200.

Annual Burden Hours: 200.

Frequency of Reporting or Use: Annual Survey.

Dated: December 13, 2004.

Solomon Bush,

Agency Clearance Officer.

BILLING CODE 6690–01–M

OMB #3048-0004

THE COMPETITIVENESS REPORT SURVEY OF EXPORTERS AND BANKERS

PART 1 – EXPORTER/BANKER COMPANY PROFILE

[Note: See "Part 1 Attachment" for answer choices to questions 1-5 below.]

Years in Business [ ] Years in Exporting/Trade Finance [ ]

Did you use Ex-Im Bank's medium-term or long-term program in 2004?
YES ☐ NO ☐

Which medium/long-term programs did you use? Check all that apply:

☐ Medium-term Insurance
☐ Medium-term Guarantee
☐ Long-term Guarantee
☐ Medium-term Loan
☐ Long-term Loan

How many applications did your organization file with Ex-Im Bank in 2004? [ ]

Compared to 2003, my 2004 volume of exports/trade finance was:
☐ Higher
☐ Same
☐ Lower

EXPORTERS

2004 sales volume [1.] 2004 U.S. export sales volume [2.]

% of export sales volume that was Ex-Im Bank supported [3.]

BANKERS

2004 export credit extended with a term over one year [4.]

% of 2004 export credit extended with a term over one year that was Ex-Im Bank supported [5.]

EIB Form 00-02

OMB #3048-0004

PART 2–EXPERIENCE WITH FOREIGN EXPORT CREDIT AGENCIES (ECAs)

[Note: See "Part 2 Attachment" for the possible answer choices to the questions below.]

Please indicate your experience in 2004 using, receiving support from or working with other official ECAs. Please select the appropriate answer for each ECA listed.

1.

Canada (EDC)		Japan (NEXI)	
France (Coface)		UK (ECGD)	
Germany (Hermes)		Other (identify)	
Italy (SACE)		Other (identify)	
Japan (JBIC)		Other (identify)	

Please indicate your experience in 2004 facing competitors that received support from foreign official ECAs. Please select the appropriate answer for each ECA listed.

1.

Canada (EDC)		Japan (NEXI)	
France (Coface)		UK (ECGD)	
Germany (Hermes)		Other (identify)	
Italy (SACE)		Other (identify)	
Japan (JBIC)		Other (identify)	

OMB #3048-0004

PART 2 (Continued)

Why do you approach Ex-Im Bank for support? Please indicate the approximate frequency with which each of the following challenges or needs arise, as well as a typical region or situation that presents such a challenge/need.

[Note: When the survey is being completed on-line, if the cursor is placed over the question further explanation of that question will "pop up." The more detailed explanations are found in the "Part 2 Attachment."]

2.

Challenge/Need	Frequency	Typical Region or Situation
Face competition from receive ECA	_____	_____
Lack of useful private market financing	_____	_____
Need continuing U.S. involveme	_____	_____
Other (Please	_____	_____
Other (Please	_____	_____

EIB Form 00-02

OMB #3048-0004

PART 3 – EXPERIENCE WITH EX-IM BANK AS COMPARED TO FOREIGN ECAs

Use this guide to answer the questions in Part 3.

[Note: When the survey is being completed on-line, if the cursor is placed over an element in which Ex-Im Bank is to be graded then the definition of that element will "pop up." The definitions for each of the elements are found in the "Part 3 Attachment."]

A+	= Fully competitive. Consistently equal to the (or is the sole) ECA offering the most competitive position on this element. Levels the playing field on this element with the most competitive offer from any of the major ECAs.
A	= Generally competitive. Consistently offers terms on this element equal to the average terms of the typical major ECA. Levels the playing field on this element with the typical offer from the major ECAs.
A-/B+	= In between A and B
B	= Modestly competitive. Consistently offers terms on this element equal to the least competitive of the major ECAs. Does not quite level the playing field on this element with most of the major ECAs.
B-/C+	= In between B and C
C	= Barely competitive. Consistently offers terms on this element that are a notch below those offered by any of the major ECAs. Puts exporter at financing disadvantage on this element that may, to a certain extent, be compensated for in other elements or by exporter concessions.
C-/D+	= In between C and D
D	= Uncompetitive. Consistently offers terms on this element that are far below those offered by other major ECAs. Puts exporter at financing disadvantage on this element so significant that it is difficult to compensate for and may be enough to lose a deal.
F	= Does not provide program or element

Please select the grade most appropriate based on your experience in 2004. If you have not had experience relating to the specific feature, please select 'N/A'.

CORE BUSINESS POLICIES AND PRACTICES

Ex-Im Bank's Cover Policy		**Ex-Im Bank's Interest Rate**	
Scope of country risk		Loans (CIRR)	
Depth of non-sovereign risk		Insurance cover	
Breadth of availibity (e.g., restrictions)		Guarantee cover	

Ex-Im Bank's Risk Premia on		**Ex-Im Bank's Co-financing**	
Sovereign		# and utility of bilateral agreements	
Non-sovereign		Flexibility in one-off deals	

OMB #3048-0004

PART 3 (Continued)

Do you have any comments on Ex-Im Bank's **cover policy, interest rates, risk premia** or **co-financing** as they compare to those offered by other ECAs? For example, what core business policies and practices, if changed, would impact your competitiveness? **Please be as specific as possible.**

MAJOR PROGRAMS AND PERFORMANCE (Please complete each of the sections **only** if you have used the named program in 2004, otherwise, please select 'N/A'.)

Ex-Im Bank's Medium-Term Program

Pricing

% of cover

Risk capacity

Ex-Im Bank's Long-Term Program

Pricing

% of cover

Risk capacity

Ex-Im Bank's Large Aircraft Program

Interest rate

% of cover

Risk capacity

Ex-Im Bank's Project Finance

Core program features

Repayment flexibilities

Ex-Im Bank's Foreign Currency Guarantee

Availability of hard currency cover

Availability of local currency cover

Pricing

Ex-Im Bank's Support for Service Exports

Availability

Repayment terms

Do you have any comments on Ex-Im Bank's programs for **medium- and long-term financing, large aircraft, project finance**, or **foreign currency guarantees** as compared to those of other ECAs? Do you have any comments on the support Ex-Im Bank offers for services exports as compared to that offered by other ECAs? What programs or performance, if changed, would impact your competitiveness? **Please be as specific as possible.**

OMB #3048-0004

PART 3 (Continued)

Using the guide below to answer the next set of questions.

+	Positive	Philosophy, policy or program has a positive impact on Ex-Im Bank's competitiveness (moves Ex-Im Bank's competitiveness grade up one notch)
*	Neutral	Philosophy, policy or program has a neutral impact on Ex-Im Bank's competitiveness (no impact on Ex-Im Bank's competitiveness grade)
-	Negative	Philosophy, policy or program has a negative impact on Ex-Im Bank's competitiveness (moves Ex-Im Bank's competitiveness grade down one notch)

Please indicate the competitive impact of the following economic philosophies, public policies and programs on Ex-Im Bank's support.

ECONOMIC PHILOSOPHY (Please complete each of the sections **only** if you have used the named program in 2004, otherwise, please select 'N/A'.)

Tied aid [ ] Market windows [ ]

Do you have any comments on Ex-Im Bank's competitiveness with regard to **tied aid** or **market windows**? For example, have you seen competition supported by market windows or tied aid financing? **Please be as specific as possible**. You may also provide case specific data in Part 4.

[ ]

OMB #3048-0004

PART 3 (Continued)

PUBLIC POLICIES (Please complete each of the sections **only** if you have used the named program in 2004, otherwise, please select 'N/A'.)

Economic impact		Foreign content		Local costs	
PR 17/Shipping		Environment			

Do you have any comments on Ex-Im Bank's policies as they compare with other ECAs concerning **economic impact**, **foreign content**, **local costs**, **shipping** or the **environment**? Where other ECAs do not have a comparable public policy, such as economic impact and shipping, do you have comments on the impact of these public policies to Ex-Im Bank's competitiveness? For example, what public policies, if changed, would impact your competitiveness? **Please be as specific as possible**.

OPERATIONAL EFFICIENCY (Please rate Ex-Im Bank's response time on applications in relation to other major ECAs in 2004.)

Canada (EDC)		Japan (NEXI)	
France (Coface)		UK (ECGD)	
Germany (Hermes)		Other (identify)	
Italy (SACE)		Other (identify)	
Japan (JBIC)		Other (identify)	

COMPETITIVENESS WEIGHTING

Please weigh the overall importance of each of the five broad categories listed above to Ex-Im Bank's overall competitiveness. Please ensure that the sum of your weights equals 100%.

Core Business Policies and Practices	[0 – 100%)]
Major Programs and Performance	[0 – 100%]
Economic Philosophy	[0 – 100%]
Public Policies	[0 – 100%]
Operational Efficiency	[0 – 100%]

[Note: The online survey will ensure that the sum of the five percentage weightings equals 100%.]

EIB Form 00-02

OMB #3048-0004

PART 4 – EX-IM BANK PROJECTS

This template provides an opportunity for you to give further details about the grades that you gave in Part 3 by detailing any positive or adverse impacts of Ex-Im Bank program features in specific transactions in 2004.

Ex.	Cost/Policy/ Program	ECA	Market	Project Description	Describe the competition you faced and the effect that it had on your business (eg forced to change sourcing; lost jobs; lower exports). If possible, please quantify.
	Cover	EDC	Iran	Power Plant	As a result of Ex-Im Bank's lack of cover for Iran, we were forced to source from outside the U.S. This resulted in a loss of over $100 million in U.S. export sales.
1					
2					
3					
4					
5					

EIB Form 00-02

OMB #3048-0004

PART 5 – GENERAL COMMENTS

This space is provided for you to express your views on the general competitive environment, trends of specific competitors, etc. You may also use this space to comment on aspects of Ex-Im Bank programs, particularly those not addressed in the above questions.

EIB Form 00-02

OMB #3048-0004

PART 1 ATTACHMENT
Dropdown answers:

1) 2003 total sales volume:
- o <$10 million
- o $10 - $50 million
- o $51 – 100 million
- o $101 - $500 million
- o $501 million - $1 billion
- o >$1 billion

2) 2003 total U.S. export sales volume:
- o <$10 million
- o $10 - $50 million
- o $51 – 100 million
- o $101 - $500 million
- o $501 million - $1 billion
- o >$1 billion

3) % of total export sales volume that was Ex-Im Bank supported:
- o <10%
- o 10% - 25%
- o 26% - 50%
- o 51% - 75%
- o >75%

4) 2003 total export credit extended with a term over one year:
- o <$10 million
- o $10 - $50 million
- o $51 – 100 million
- o $101 - $500 million
- o $501 million - $1 billion
- o >$1 billion

5) % of 2003 total export credit extended with a term over one year that was Ex-Im Bank supported:
- o <10%
- o 10% - 25%
- o 26% - 50%
- o 51% - 75%
- o >75%

OMB #3048-0004

PART 2 ATTACHMENT

1) Dropdown answers:

Experience with foreign ECAs (receiving support from or facing competitors supported by):

- o Regular
- o Rare
- o None

2) Pop-up definitions:

Part/Section	Term/Phrase	Definition
Part 2, Challenge/Need	Face competition from companies that receive ECA support	
	Find a lack of useful private market financing available	Private market financing is either unavailable for the term or market or is so expensive as to be prohibitive
	Need continuing U.S. government involvement	For example, in certain transactions, a long-term presence of the U.S. government is a useful transactional security blanket, even if not financially necessary to fund the transaction

OMB #3048-0004

PART 3 ATTACHMENT

1) Grades definition:

A+	Fully competitive	Consistently equal to the (or is the sole) ECA offering the most competitive position on this element. Levels the playing field on this element with the most competitive offer from any of the major ECAs.
A	Generally competitive	Consistently offers terms on this element equal to the average terms of the typical major ECA. Levels the playing field on this element with the typical offer from the major ECAs.
A-/B+		In between A and B.
B	Modestly competitive	Consistently offers terms on this element equal to the least competitive of the major ECAs. Does not quite level the playing field on this element with most of the major ECAs.
B-/C+		In between B and C.
C	Barely competitive	Consistently offers terms on this element that are a notch below those offered by any of the major ECAs. Puts exporter at financing disadvantage on this element that may, to a certain extent, be compensated for in other elements or by exporter concessions.
C-/D+		In between C and D.
D	Uncompetitive	Consistently offers terms on this element that are far below those offered by other major ECAs. Puts exporter at financing disadvantage on this element so significant that it is difficult to compensate for and may be enough to lose a deal.
F	Does not provide program or element	

Pop-up definitions:

Part/Section	Term/Phrase	Definition
Part 3, Core Business Policies and Practices	Ex-Im Bank's Cover Policy	Please compare the following elements of Ex-Im Bank's willingness to cover political and commercial risks in a particular country against other ECAs' cover policies

OMB #3048-0004

Part/Section	Term/Phrase	Definition
	Scope of country risk	The number and utility of countries where cover is available
	Depth of non-sovereign risk	The number, variety and utility of cover available for private buyers
	Breadth of availability	The number and utility of markets where cover is not restricted by amount or term
	Interest Rates Provided by Ex-Im Bank	Please compare the interest rates available under Ex-Im Bank programs (including those offered by the private sector lenders who benefit from Ex-Im's guarantee or insurance) to those available from other ECAs
	Loans (CIRR)	The official fixed Commercial Interest Reference Rate offered under Ex-Im Bank's direct loan program
	Insurance Cover	The interest rates offered by banks using Ex-Im Bank's medium-term insurance program
	Guarantee Cover	The interest rates offered by banks using Ex-Im Bank's guarantee program
	Ex-Im Bank's Risk Premia on:	Please compare the following types of exposure or risk fee charged by Ex-Im Bank to the fees charged by other ECAs
	Sovereign	The exposure fee charged by Ex-Im Bank for transactions to sovereign buyers or guaranteed by sovereign entities
	Non-sovereign	The exposure fee charged by Ex-Im Bank for transactions to public non-sovereign or private sector buyers

EIB Form 00-02

OMB #3048-0004

Part/Section	Term/Phrase	Definition
Part 3, Major Programs and Performance	Ex-Im Bank's Large Aircraft Program	Please compare the following elements of Ex-Im Bank's large aircraft program to the aircraft programs of other ECAs
	Fixed interest rate level	The interest rates available under Ex-Im Bank's aircraft program
	Percentage of cover	The percentage of the transaction value underwritten by Ex-Im Bank
	Risk capacity	Ex-Im Bank's ability to take on a variety of risks in its aircraft program
	Ex-Im Bank' Project Finance	Please compare the following elements of Ex-Im Bank's project finance program to those of other ECAs' programs
	Core program features	Availability of coverage for pre- and post-completion risks, interest during construction, local costs support
	Repayment flexibilities	Willingness and ability to use available OECD repayment flexibilities
	Ex-Im Bank's Co-financing	Please compare the following elements of Ex-Im Bank's co-financing program to those of other ECAs' co-financing programs
	# and utility of bilateral agreements	Availability and utility of co-financing framework agreements between Ex-Im Bank and another ECA
	Flexibility in one-off deals	Availability and willingness to do one-time co-financing transactions without a bilateral framework agreement

OMB #3048-0004

Part/Section	Term/Phrase	Definition
	Ex-Im Bank's Foreign Currency Guarantees	Please compare Ex-Im Bank's ability to guarantee loans denominated in foreign currencies compared to that of other ECAs
	Availability of hard currency cover	Availability of cover for freely convertible and readily available currencies of developed countries, such as the Japanese yen, the Euro, and the Swiss franc.
	Availability of local currency cover	Availability of cover for the currencies of the buyer, typically located in emerging market countries, such as the Mexican peso, South African rand, and Indian rupee.
	Pricing	The exposure fee charged by Ex-Im Bank under its foreign/local currency guarantee program
	Ex-Im Bank's Support for Services Exports	Please compare the following elements of Ex-Im Bank's support for services (intangible exports such as engineering and design services) to the support provided by other ECAs
	Availability	How easy it is to attain medium- or long-term Ex-Im Bank support for services exports (on a stand-alone basis, i.e., without being bundled with exports of goods)
	Repayment terms	The repayment terms Ex-Im Bank offers for services exports

EIB Form 00-02

OMB #3048-0004

Competitive Impact Definition

+	Positive	Philosophy, policy or program has a positive impact on Ex-Im Bank's competitiveness (moves Ex-Im Bank's competitiveness grade up one notch)
*	Neutral	Philosophy, policy or program has a positive impact on Ex-Im Bank's competitiveness (no impact on Ex-Im Bank's competitiveness grade)
-	Negative	Philosophy, policy or program has a positive impact on Ex-Im Bank's competitiveness (moves Ex-Im Bank's competitiveness grade down one notch)

Part 3, Economic Philosophy	Tied Aid	The offer of concessional credits to buyer countries in return for the purchase of U.S. goods.
	Market windows	Ex-Im Bank's response to the provision of export credits on "market terms" by a government ECA or government-supported financial institution.
Part 3, Public Policies	Economic Impact	The requirement to assess whether Ex-Im Bank financing of a particular export will cause substantial injury to U.S. industry or result in the production of a good that is subject to a trade measure.
	Foreign content	Inclusion of eligible content that originated outside the U.S. and the buyer's country in a U.S. supply contract.
	Local costs	Support for export-related costs that are incurred in the buyer's country.
	PR 17/Shipping	The requirement that exports support by Ex-Im Bank's medium- and long-term loans and long-term guarantees be shipped on U.S. flag vessels.
	Environment	Environmental review procedures, policies and requirements.

EIB Form 00-02

[FR Doc. 04–27725 Filed 12–17–04; 8:45 am]
BILLING CODE 6690–01–C

FEDERAL COMMUNICATIONS COMMISSION

Notice of Public Information Collection(s) Being Submitted to OMB for Review and Approval

December 9, 2004.

SUMMARY: The Federal Communications Commission, as part of its continuing effort to reduce paperwork burden invites the general public and other Federal agencies to take this opportunity to comment on the following information collection, as required by the Paperwork Reduction Act of 1995, Public Law 104–13. An agency may not conduct or sponsor a collection of information unless it displays a currently valid control number. No person shall be subject to any penalty for failing to comply with a collection of information subject to the Paperwork Reduction Act (PRA) that does not display a valid control number. Comments are requested concerning (a) whether the proposed collection of information is necessary for the proper performance of the functions of the Commission, including whether the information shall have practical utility; (b) the accuracy of the Commission's burden estimate; (c) ways to enhance the quality, utility, and clarity of the information collected; and (d) ways to minimize the burden of the collection of information on the respondents, including the use of automated collection techniques or other forms of information technology.

DATES: Written comments should be submitted on or before January 19, 2005. If you anticipate that you will be submitting comments, but find it difficult to do so within the period of time allowed by this notice, you should advise the contact listed below as soon as possible.

ADDRESSES: Direct all comments to Cathy Williams, Federal Communications Commission, Room 1–C823, 445 12th Street, SW., Washington, DC 20554 or via the Internet to *Cathy.Williams@fcc.gov* or Kristy L. LaLonde, Office of Management and Budget (OMB), Room 10236 NEOB, Washington, DC 20503, (202) 395–3087 or via the Internet at *Kristy_L._LaLonde@omb.eop.gov.*

FOR FURTHER INFORMATION CONTACT: For additional information or copy of the information collection(s) contact Cathy Williams at (202) 418–2918 or via the Internet at *Cathy.Williams@fcc.gov.*

SUPPLEMENTARY INFORMATION:

OMB Control Number: 3060–0316.

Title: Sections 76.1700, Records To Be Maintained Locally by Cable System Operators, 76.1703, Commercial Records on Children's Program; 76.1704, Proof-of-Performance Test Data; 76.1707, Leased Access, and 76.1711, Emergency Alert System (EAS) Tests and Activation.

Form Number: Not Applicable.

Type of Review: Revision of a currently approved collection.

Respondents: Business or other for-profit entities.

Number of Respondents: 4,000.

Estimated Time per Response: 26 hours.

Frequency of Response: Recordkeeping requirement.

Total Annual Burden: 104,000 hours.

Total Annual Cost: None.

Privacy Impact Assessment: No impact(s).

Needs and Uses: 47 CFR 76.1700 exempts cable television systems having fewer than 1,000 subscribers from the public inspection requirements contained in 47 CFR 76.1701 (political file); 76.1702 (equal employment opportunity); 76.1703 (commercial records for children's programming); 76.1704 (proof-of-performance test data); 76.1706 (signal leakage logs and repair records); and 76.1715 (sponsorship identifications).

The operator of every cable television system having 1,000 or more subscribers but fewer than 5,000 subscribers shall, upon request, provide the information required by §§ 76.1702 (equal employment opportunity); 76.1703 (commercial records for children's programming); 76.1704 (proof-of-performance test data); 76.1706 (signal leakage logs and repair records); and 76.1715 (sponsorship identifications) but shall maintain for public inspection a file containing a copy of all records required to be kept by 47 CFR 76.1701 (political files).

The operator of every cable television system having 5,000 or more subscribers shall maintain for public inspection a file containing a copy of all records which are required to be kept by §§ 76.1701 (political file); 76.1702 (equal employment opportunity); 76.1703 (commercial records for children's programming); 76.1704 (proof-of-performance test data); 76.1706 (signal leakage logs and repair records); and 76.1715 (sponsorship identifications).

47 CFR 76.1700(b) requires that the public inspection file shall be maintained at the office which the system operator maintains for the ordinary collection of subscriber charges, resolution of subscriber complaints, and other business or at any accessible place in the community served by the system unit(s) (such as a public registry for documents or an attorney's office). The public inspection file shall be available for public inspection at any time during regular business hours.

47 CFR 76.1700(d) requires the records specified in paragraph (a) of this section shall be retained for the period specified in §§ 76.1701, 76.1702, 76.1704(a), and 76.1706.

47 CFR 76.1703 requires that cable operators airing children's programming must maintain records sufficient to verify compliance with 47 CFR 76.225 and make such records available to the public. Such records must be maintained for a period sufficient to cover the limitations period specified in 47 U.S.C. 503(b)(6)(B).

47 CFR 76.1704(a) requires the proof of performance tests required by § 76.601 shall be maintained on file at the operator's local business office for at least five years. The test data shall be made available for inspection by the Commission or the local franchiser, upon request.

47 CFR 76.1704(b) requires the provisions of paragraph (a) of this section shall not apply to any cable television system having fewer than 1,000 subscribers, subject to the requirements of § 76.601(d).

47 CFR 76.1707 requires that if a cable operator adopts and enforces a written policy regarding indecent leased access programming pursuant to § 76.701, such a policy will be considered published pursuant to that rule by inclusion of the written policy in the operator's public inspection file.

47 CFR 76.1711 requires that a record shall be kept of each test and activation of the Emergency Alert System (EAS) procedures pursuant to the requirement of Part 11 of this chapter and the EAS Operating Handbook. These records shall be kept for three years.

Federal Communications Commission.

Marlene H. Dortch,

Secretary.

[FR Doc. 04–27794 Filed 12–17–04; 8:45 am]
BILLING CODE 6712–01–P

FEDERAL RESERVE SYSTEM

Formations of, Acquisitions by, and Mergers of Bank Holding Companies

The companies listed in this notice have applied to the Board for approval, pursuant to the Bank Holding Company Act of 1956 (12 U.S.C. 1841 *et seq.*)

(BHC Act), Regulation Y (12 CFR Part 225), and all other applicable statutes and regulations to become a bank holding company and/or to acquire the assets or the ownership of, control of, or the power to vote shares of a bank or bank holding company and all of the banks and nonbanking companies owned by the bank holding company, including the companies listed below.

The applications listed below, as well as other related filings required by the Board, are available for immediate inspection at the Federal Reserve Bank indicated. The application also will be available for inspection at the offices of the Board of Governors. Interested persons may express their views in writing on the standards enumerated in the BHC Act (12 U.S.C. 1842(c)). If the proposal also involves the acquisition of a nonbanking company, the review also includes whether the acquisition of the nonbanking company complies with the standards in section 4 of the BHC Act (12 U.S.C. 1843). Unless otherwise noted, nonbanking activities will be conducted throughout the United States. Additional information on all bank holding companies may be obtained from the National Information Center website at *www.ffiec.gov/nic/*.

Unless otherwise noted, comments regarding each of these applications must be received at the Reserve Bank indicated or the offices of the Board of Governors not later than January 13, 2005.

A. Federal Reserve Bank of Atlanta (Sue Costello, Vice President) 1000 Peachtree Street, N.E., Atlanta, Georgia 30303:

1. Whitney Holding Corporation, New Orleans, Louisiana; to merge with Destin Bancshares, Inc., and thereby indirectly acquire voting shares of Destin Bank, both of Destin, Florida.

B. Federal Reserve Bank of Kansas City (Donna J. Ward, Assistant Vice President) 925 Grand Avenue, Kansas City, Missouri 64198–0001:

1. Frontier Holdings, LLC, Madison, Nebraska; to become a bank holding company by acquiring 100 percent of the voting shares of The Bank of Madison, Madison, Nebraska.

Board of Governors of the Federal Reserve System, December 14, 2004.

Robert deV. Frierson,

Deputy Secretary of the Board.

[FR Doc. 04–27728 Filed 12–17–04; 8:45 am]

BILLING CODE 6210–01–S

FEDERAL RESERVE SYSTEM

Notice of Proposals to Engage in Permissible Nonbanking Activities or to Acquire Companies that are Engaged in Permissible Nonbanking Activities

The companies listed in this notice have given notice under section 4 of the Bank Holding Company Act (12 U.S.C. 1843) (BHC Act) and Regulation Y (12 CFR Part 225) to engage *de novo*, or to acquire or control voting securities or assets of a company, including the companies listed below, that engages either directly or through a subsidiary or other company, in a nonbanking activity that is listed in § 225.28 of Regulation Y (12 CFR 225.28) or that the Board has determined by Order to be closely related to banking and permissible for bank holding companies. Unless otherwise noted, these activities will be conducted throughout the United States.

Each notice is available for inspection at the Federal Reserve Bank indicated. The notice also will be available for inspection at the offices of the Board of Governors. Interested persons may express their views in writing on the question whether the proposal complies with the standards of section 4 of the BHC Act. Additional information on all bank holding companies may be obtained from the National Information Center website at *www.ffiec.gov/nic/*.

Unless otherwise noted, comments regarding the applications must be received at the Reserve Bank indicated or the offices of the Board of Governors not later than January 3, 2005.

A. Federal Reserve Bank of Chicago (Patrick Wilder, Assistant Vice President) 230 South LaSalle Street, Chicago, Illinois 60690–1414:

1. Midwestone Financial Group, Inc., and Midwestone Financial Group ESOP, both of Oskaloosa, Iowa; to retain MidWestOne Investments Services, Inc., Oskaloosa, Iowa, and thereby continue to engage in financial and investment advisory services and securities brokerage services, pursuant to section 225.28(b)(7)(i) of Regulation Y.

Board of Governors of the Federal Reserve System, December 14, 2004.

Robert deV. Frierson,

Deputy Secretary of the Board.

[FR Doc. 04–27729 Filed 12–17–04; 8:45 am]

BILLING CODE 6210–01–S

GENERAL SERVICES ADMINISTRATION

Privacy Act of 1974; Revised Privacy Act System of Records

AGENCY: General Services Administration

ACTION: Notice of an amended Privacy Act system of records

SUMMARY: The General Services Administration (GSA) is publishing an amended system of records notice for the Government-wide system of records, Contracted Travel Services Program (GSA/GOVT–4), as part of GSA's responsibility to enhance the Federal government's electronic capability. The amendment includes clarification of routine use f., and the addition of routine use o., which allows disclosure of summary or statistical information without reference to any identifiable individual. The system of records is the basis for providing comprehensive travel services for travelers on official Federal business, from initial travel authorization to the final accounting.

DATES: The revised system notice is effective on the date of publication.

FOR FURTHER INFORMATION CONTACT: GSA Privacy Act Officer, Office of Information Management (CI), General Services Administration, 1800 F Street NW, Washington DC 20405; telephone (202) 501–1452.

Dated: December 2, 2004

JUNE V. HUBER

Director, Office of Information ManagementOffice of the Chief People Officer

GSA/GOVT–4

System name: Contracted Travel Services Program.

System location: System records are located at the service providers under contract with a Federal agency and at the Federal agencies using the contracts.

Categories of individuals covered by the system: Individuals covered by the system are Federal employees authorized to perform official travel, and individuals being provided travel by the Federal government.

Categories of records in the system: System records include a traveler's profile containing: name of individual; Social Security Number; employee identification number; home and office telephones; home address; home and office e-mail addresses; emergency contact name and telephone number; agency name, address, and telephone number; air travel preference; rental car identification number and car preference; hotel preference; current passport and/or visa number(s); credit card numbers and related information;

bank account information needed for electronic funds transfer; frequent traveler account information (e.g., frequent flyer account numbers); trip information (e.g., destinations, reservation information); travel authorization information; travel claim information; monthly reports from travel agent(s) showing charges to individuals, balances, and other types of account analyses; and other official travel related information.

Authorities for maintenance of the system: 31 U.S.C. 3511, 3512, and 3523; 5 U.S.C. Chapter 57; and implementing Federal Travel Regulations (41 CFR parts 300–304).

Purpose: To establish a comprehensive beginning-to-end travel services system containing information to enable travel service providers under contract to the Federal government to authorize, issue, and account for travel and travel reimbursements provided to individuals on official Federal government business.

Routine uses of records maintained in the system, including categories of users and the purposes of such uses:

Information in the system may be disclosed as a routine use as follows:

a. To a Federal, State, local, or foreign agency responsible for investigating, prosecuting, enforcing, or carrying out a statute, rule, regulation, or order, where agencies become aware of a violation or potential violation of civil or criminal law or regulation.

b. To another Federal agency or a court when the Federal government is party to a judicial proceeding.

c. To a Member of Congress or a congressional staff member in response to an inquiry from that congressional office made at the request of the individual who is the subject of the record.

d. To a Federal agency employee, expert, consultant, or contractor in performing a Federal duty for purposes of authorizing, arranging, and/or claiming reimbursement for official travel, including, but not limited to, traveler profile information.

e. To a credit card company for billing purposes, including collection of past due amounts.

f. To a Federal agency, expert, consultant, or contractor for accumulating reporting data, conducting surveys, and monitoring the system in the performance of a Federal duty.

g. To a Federal agency by the contractor in the form of itemized statements or invoices, and reports of all transactions, including refunds and adjustments to enable audits of charges to the Federal government.

h. To a Federal agency, in response to its request, in connection with the hiring or retention of any employee to the extent that the information is relevant and necessary to the requesting agency's decision on the matter.

i. To an authorized appeal or grievance examiner, formal complaints examiner, equal employment opportunity investigator, arbitrator, or other duly authorized official engaged in investigation or settlement of a grievance, complaint, or appeal filed by an employee to whom the information pertains.

j. To the Office of Personnel Management (OPM) in accordance with the agency's responsibility for evaluation of Federal personnel management.

k. To officials of labor organizations recognized under 5 U.S.C. chapter 71 when relevant and necessary to their duties of exclusive representation concerning personnel policies, practices, and matters affecting working conditions.

l. To a travel services provider for billing and refund purposes.

m. To a carrier or an insurer for settlement of an employee claim for loss of or damage to personal property incident to service under 31 U.S.C. § 3721, or to a party involved in a tort claim against the Federal government resulting from an accident involving a traveler.

n. To a credit reporting agency or credit bureau, as allowed and authorized by law, for the purpose of adding to a credit history file when it has been determined that an individual's account with a creditor with input to the system is delinquent.

o. Summary or statistical data from the system with no reference to an identifiable individual may be released publicly.

Policies and practices for storing, retrieving, reviewing, retaining, and disposing of records in the system:

Storage: Paper records are stored in file cabinets. Electronic records are maintained within a computer (e.g., PC, server, etc.) and attached equipment.

Retrievability: Paper records are filed by a traveler's name and/or Social Security Number/employee identification number at each location. Electronic records are retrievable by any attribute of the system.

Safeguards: Paper records are stored in lockable file cabinets or secured rooms. Electronic records are protected by a password system and a secure socket layer encrypted Internet connection. Information is released only to authorized users and officials on a need-to-know basis.

Retention and disposal: Records kept by a Federal agency are maintained in accordance with the General Records Retention Schedules issued by the National Archives and Records Administration (NARA).

System manager(s) and address: Assistant Commissioner, Office of Transportation and Property Management (FB), Federal Supply Service, General Services Administration, Crystal Mall Building 4, 1941 Jefferson Davis Highway, Arlington VA 22202.

Notification procedure: Inquiries from individuals should be addressed to the appropriate administrative office for the agency that is authorizing and/or reimbursing their travel.

Records access procedures: Requests from individuals should be addressed to the appropriate administrative office for the agency that is authorizing and/or reimbursing their travel. Individuals must furnish their full name and/or Social Security Number to the authorizing agency for their records to be located and identified.

Contesting record procedures: Individuals wishing to request amendment of their records should contact the appropriate administrative office for the agency that authorized and/or reimbursed their travel. Individuals must furnish their full name and/or Social Security Number along with the name of the authorizing agency, including duty station where they were employed at the time travel was performed.

Record source categories: The sources are the individuals themselves, employees, travel authorizations, credit card companies, and travel service providers.

[FR Doc. 04–27749 Filed 12–17–04; 8:45 am]

BILLING CODE 6820–34–S

DEPARTMENT OF HEALTH AND HUMAN SERVICES

Centers for Disease Control and Prevention

Iron Disorders Institute; Patient and Physician Education and Training Activities on Iron-Out-of-Balance and Iron Overload

Announcement Type: New.

Funding Opportunity Number: RFA 05030.

Catalog of Federal Domestic Assistance Number: 93.283.

Application Deadline: January 19, 2005.

I. Funding Opportunity Description

Authority: This program is authorized under Section 301(a) and 317(k)(2), of the Public Health Services Act, 24 U.S.C. section 241(a) and 247b(k)(2) as amended.

Purpose: The purpose of the program is to provide funding for updating, printing and dissemination of developed hemochromatosis educational data and website information for Patient and Physician information and training. The prevention and control of hemochromatosis is an achievable goal and is important to the overall prevention of chronic disease. In the United States, it is estimated that as many as one in every 200 to 500 people, or approximately one million people, have evidence of hemochromatosis, and as many as one in every ten people may carry the gene for this hereditary disease.

This program addresses the ''Healthy People 2010'' focus area of Nutrition and Overweight.

Measurable outcomes of the program will be in alignment with one or more of the following performance goal(s) for the National Center for Chronic Disease Prevention and Health Promotion. Division of Nutrition and Physical Activity hemochromatosis priorities include:

1. Educating health care providers about the importance of early diagnosis and treatment of hemochromatosis.
2. Determining how best to use laboratory testing of serum iron measures and genetic testing to assist clinicians and patients.
3. Educate patients about hemochromatosis and family-based detection.
4. Estimate the prevalence of hemochromatosis and its associated morbidity and mortality.

Activities: Awardee activities for this program are as follows:

- Develop a plan of action to enhance activities for patient information dissemination and training activities on Iron Out of Balance and Iron Overload.
- Develop specific, time-phased, and measurable objectives.
- Carry out activities consistent with proposed plan of action designed to meet the proposed objectives.
- Evaluate how well program activities met proposed objectives.

II. Award Information

Type of Award: Grant.

Fiscal Year Funds: 2005.

Approximate Total Funding: $75,000.

Approximate Number of Awards: One.

Approximate Average Award: $75,000 (This amount is for the first 12-month budget period, and includes both direct and indirect costs).

Floor of Award Range: None.

Ceiling of Award Range: None.

Anticipated Award Date: January 31, 2005.

Budget Period Length: 12 months.

Project Period Length: 12 months. This is a one-year project period. No continuation awards are anticipated.

III. Eligibility Information

III.1. Eligible Applicants

Applications may be submitted by national; nonprofit; non-partisan or bipartisan organizations that can provide evidence of partnerships and/or collaborative activities with scientists and influential health related resources who have expertise and knowledge of iron balances and an influence on the outcome of health and can provide information widely accepted in the scientific and medical community.

Eligible applicant must demonstrate evidence of experience and capabilities for development and dissemination of educational and awareness materials for patients and physicians that complement CDC's scientific, training, and dissemination activities in hemochromatosis.

Limited competition is justified under this program announcement due to the limited number of organizations having access to the unique data that is iron-specific, include evidence based tables and a glossary of iron related medical terms or have the experience and capabilities necessary to carry out the purpose of this requirement.

III.2. Cost Sharing or Matching

Matching funds are not required for this program.

III.3. Other

If you request a funding amount greater than the ceiling of the award range, your application will be considered non-responsive, and will not be entered into the review process. You will be notified that your application did not meet the submission requirements.

Special Requirements: If your application is incomplete or non-responsive to the requirements listed in this section, it will not be entered into the review process. You will be notified that your application did not meet submission requirements.

Note: Title 2 of the United States Code section 1611 states that an organization described in section 501(c)(4) of the Internal Revenue Code that engages in lobbying activities is not eligible to receive Federal funds constituting an award, grant, or loan.

IV. Application and Submission Information

IV.1. Address To Request Application Package

To apply for this funding opportunity use application form PHS 5161. Application forms and instructions are available on the CDC Web site, at the following Internet address: *http://www.cdc.gov/od/pgo/forminfo.htm.*

If you do not have access to the Internet, or if you have difficulty accessing the forms on-line, you may contact the CDC Procurement and Grants Office Technical Information Management Section (PGO–TIM) staff at: 770–488–2700. Application forms can be mailed to you.

IV.2. Content and Form of Submission

Application: You must submit a project narrative with your application forms. The narrative must be submitted in the following format:

- Maximum number of pages: 15. If your narrative exceeds the page limit, only the first pages which are within the page limit will be reviewed.
- Font size: 12 point unreduced.
- Double spaced.
- Paper size: 8.5 by 11 inches.
- Page margin size: One inch.
- Printed only on one side of page.
- Held together only by rubber bands or metal clips; not bound in any other way.

Your narrative should address activities to be conducted over the entire project period, and must include the following items in the order listed: Plan, Methods, Objectives, Timeline, Staff, Understanding, Need, Performance Measures, Budget Justification. The budget justification will not be counted in the stated page limit.

Additional information may be included in the application appendices. The appendices will not be counted toward the narrative page limit. This additional information includes:

- Curriculum Vitaes, Resumes, Organizational Charts, Letters of Support.

You are required to have a Dun and Bradstreet Data Universal Numbering System (DUNS) number to apply for a grant or cooperative agreement from the Federal government. The DUNS number is a nine-digit identification number, which uniquely identifies business entities. Obtaining a DUNS number is easy and there is no charge. To obtain a DUNS number, access *http://www.dunandbradstreet.com* or call 1–866–705–5711.

For more information, see the CDC Web site at: *http://www.cdc.gov/od/pgo/*

funding/pubcommt.htm. If your application form does not have a DUNS number field, please write your DUNS number at the top of the first page of your application, and/or include your DUNS number in your application cover letter.

Additional requirements that may require you to submit additional documentation with your application are listed in section ''VI.2. Administrative and National Policy Requirements.''

IV.3. Submission Dates and Times

Application Deadline Date: January 19, 2005.

Explanation of Deadlines: Applications must be received in the CDC Procurement and Grants Office by 4 p.m. Eastern Time on the deadline date. If you send your application by the United States Postal Service or commercial delivery service, you must ensure that the carrier will be able to guarantee delivery of the application by the closing date and time. If CDC receives your application after closing due to: (1) Carrier error, when the carrier accepted the package with a guarantee for delivery by the closing date and time, or (2) significant weather delays or natural disasters, you will be given the opportunity to submit documentation of the carriers guarantee. If the documentation verifies a carrier problem, CDC will consider the application as having been received by the deadline.

This announcement is the definitive guide on application submission address and deadline. It supersedes information provided in the application instructions. If your application does not meet the deadline above, it will not be eligible for review, and will be discarded. You will be notified that your application did not meet the submission requirements.

CDC will not notify you upon receipt of your application. If you have a question about the receipt of your application, first contact your courier. If you still have a question, contact the PGO–TIM staff at: 770–488–2700. Before calling, please wait two to three days after the application deadline. This will allow time for applications to be processed and logged.

IV.4. Intergovernmental Review of Applications

Executive Order 12372 does not apply to this program.

IV.5. Funding Restrictions

Restrictions, which must be taken into account while writing your budget, are as follows:

- Construction and or renovations.
- Web-site development of shopping cart capabilities, and online contributions.
- Patient to patient chat rooms and links to information regarding activity in the private sector that supports treatment or management of disorders of iron.

If you are requesting indirect costs in your budget, you must include a copy of your indirect cost rate agreement. If your indirect cost rate is a provisional rate, the agreement should be less than 12 months of age.

Awards will not allow reimbursement of pre-award costs.

Guidance for completing your budget can be found on the CDC Web site, at the following Internet address: *http://www.cdc.gov/od/pgo/funding/budgetguide.htm.*

IV.6. Other Submission Requirements

Application Submission Address: You may submit your application electronically at *http://www.grants.gov,* or submit the original and two hard copies of your application by mail or express delivery service to: Technical Information Management–RFA 05030, CDC Procurement and Grants Office, 2920 Brandywine Road, Atlanta, GA 30341.

V. Application Review Information

V.1. Criteria

You are required to provide measures of effectiveness that will demonstrate the accomplishment of the various identified objectives of the grant. Measures of effectiveness must relate to the performance goals stated in the ''Purpose'' section of this announcement. Measures must be objective and quantitative, and must measure the intended outcome. These measures of effectiveness must be submitted with the application and will be an element of evaluation.

Your application will be evaluated against the following criteria:

1. Work Plan (60 Points)

a. Does the plan for achieving the proposed activities appear realistic and feasible? Will it accomplish program requirements and goals of the grant?

b. Does the proposed plan for evaluating progress toward meeting objectives appear reasonable and feasible?

c. Are the objectives specific, time-phased, measurable, realistic, and related to identified needs, program requirements, and purpose of the program?

2. Staffing and Organizational Support (20 Points)

Does the proposed staff have the relevant background, qualifications, and experience?

3. Background and Need (20 Points)

Does the applicant identify specific needs, resources and interest available for the activities and present data justifying the need for the program in terms of the magnitude of the burden?

4. Budget (Not Scored)

Does the budget appear reasonable and consistent with the proposed activities and intent of the program?

5. Human Subjects (Not Scored)

Does the application adequately address the requirements of Title 45 CFR Part 46 for the protection of Human Subjects?

V.2. Review and Selection Process

The Application will be reviewed for completeness by the Procurement and Grants Office (PGO) staff and for responsiveness by National Center for Chronic Disease Prevention and Health Promotion/Division of Nutrition and Physical Activity. An incomplete or non-responsive application will not advance through the review process. The Applicant will be notified that their application did not meet submission requirements.

An objective review panel will evaluate completeness and responsiveness of the application according to the criteria listed in the ''V.1. Criteria'' section above.

V.3. Anticipated Announcement and Award Dates

January 31, 2005, project start date.

VI. Award Administration Information

VI.1. Award Notices

The Successful applicant will receive a Notice of Grant Award (NGA) from the CDC Procurement and Grants Office. The NGA shall be the only binding, authorizing document between the recipient and CDC. The NGA will be signed by an authorized Grants Management Officer, and mailed to the recipient fiscal officer identified in the application.

The Unsuccessful applicant will receive notification of the results of the application review by mail.

VI.2. Administrative and National Policy Requirements

45 CFR Parts 74 and 92

For more information on the Code of Federal Regulations, see the National

Archives and Records Administration at the following Internet address: *http://www.access.gpo.gov/nara/cfr/cfr-table-search.html.*

The following additional requirements apply to this project:

- AR–7 Executive Order 12372.
- AR–9 Paperwork Reduction Act Requirements.
- AR–10 Smoke-Free Workplace Requirements.
- AR–11 Healthy People 2010.
- AR–12 Lobbying Restrictions.

Additional information on these requirements can be found on the CDC web site at the following Internet address: *http://www.cdc.gov/od/pgo/funding/ARs.htm.*

VI.3. Reporting Requirements

You must provide CDC with an original, plus two hard copies of the following reports:

1. Interim progress report, no less than 90 days before the end of the budget period. Report must contain the following elements:

a. Current Budget Period Activities Objectives.

b. Current Budget Period Financial Progress.

c. Additional Requested Information.

d. Measures of Effectiveness.

2. Final financial and performance reports, no more than 90 days after the end of the project period.

These reports must be mailed to the Grants Management or Contract Specialist listed in the ''Agency Contacts'' section of this announcement.

VII. Agency Contacts

For general questions about this announcement, contact: Technical Information Management Section, CDC Procurement and Grants Office, 2920 Brandywine Road, Atlanta, GA 30341, Telephone: 770–488–2700.

For program technical assistance, contact: Dan Sadler, Project Officer, CDC National Center for Chronic Disease Prevention, 4770 Buford Highway, NE MS K–24, Atlanta, GA 30341, Telephone: 770–488–6002, *E-mail:DSadler@CDC.gov.*

For financial, grants management, or budget assistance, contact: Carlos Smiley, Grants Management Specialist, CDC Procurement and Grants Office, 2920 Brandywine Road, Atlanta, GA 30341, Telephone: 770–488–2754, E-mail: *CSmiley@cdc.gov.*

VIII. Other Information

None.

Dated: December 13, 2004.

William P. Nichols,

Director, Procurement and Grants Office, Centers for Disease Control and Prevention.

[FR Doc. 04–27707 Filed 12–17–04; 8:45 am]

BILLING CODE 4163–18–P

DEPARTMENT OF HEALTH AND HUMAN SERVICES

Centers for Disease Control and Prevention

Mallinckrodt Chemical Company, Destrehan Street Plant

AGENCY: Centers for Disease Control and Prevention (CDC), Department of Health and Human Services (HHS).

ACTION: Notice.

SUMMARY: The Department of Health and Human Services gives notice of a decision to evaluate a petition submitted on behalf of a class of employees at the Mallinckrodt Chemical Company, Destrehan Street Plant, in Saint Louis, Missouri to determine whether all or some part of the class should be included in the Special Exposure Cohort under the Energy Employees Occupational Illness Compensation Program Act of 2000. The initial proposed definition for the class being evaluated, subject to revision as warranted by the evaluation, is as follows:

Facility: Mallinckrodt Chemical Company, Destrehan Street Plant, Saint Louis, Missouri.

Locations: All locations in the Destrehan Street Plant.

Job Titles and/or Job Duties: All employees that conducted Atomic Energy Commission (AEC) work at the Destrehan Street Plant.

Period of Employment: 1942–1957.

FOR FURTHER INFORMATION CONTACT: Larry Elliott, Director, Office of Compensation Analysis and Support, National Institute for Occupational Safety and Health, 4676 Columbia Parkway, MS C–46, Cincinnati, OH 45226, Telephone 513–533–6800 (this is not a toll-free number). Information requests can also be submitted by e-mail to *OCAS@CDC.GOV*.

Dated: December 13, 2004.

James D. Seligman,

Associate Director for Program Services, Centers for Disease Control and Prevention.

[FR Doc. 04–27812 Filed 12–17–04; 8:45 am]

BILLING CODE 4163–19–P

DEPARTMENT OF HEALTH AND HUMAN SERVICES

Centers for Medicare and Medicaid Services

[Document Identifier: CMS–R–238]

Agency Information Collection Activities: Proposed Collection; Comment Request

AGENCY: Centers for Medicare and Medicaid Services, HHS.

In compliance with the requirement of section 3506(c)(2)(A) of the Paperwork Reduction Act of 1995, the Centers for Medicare and Medicaid Services (CMS) (formerly known as the Health Care Financing Administration (HCFA)), Department of Health and Human Services, is publishing the following summary of proposed collections for public comment. Interested persons are invited to send comments regarding this burden estimate or any other aspect of this collection of information, including any of the following subjects: (1) The necessity and utility of the proposed information collection for the proper performance of the agency's functions; (2) the accuracy of the estimated burden; (3) ways to enhance the quality, utility, and clarity of the information to be collected; and (4) the use of automated collection techniques or other forms of information technology to minimize the information collection burden.

1. *Type of Information Collection Request:* Extension of a currently approved collection; *Title of Information Collection:* Inpatient Psychiatric Services for Individuals Under Age 21 and Supporting Regulations in 42 CFR Section 441.151 and 441.152; *Use:* Certification requirements in 42 CFR 441.151 and 441.152 require that if it is determined that psychiatric services in an inpatient setting for individuals under age 21 are necessary, certification must be in writing before an individual is admitted for treatment. This information is used by States to document that effective screening measures are in place to justify the use of inpatient psychiatric services; *Form Number:* CMS–R–238 (OMB#: 0938–0754); *Frequency:* Recordkeeping; *Affected Public:* State, Local or Tribal Govt., Business or other for-profit, and Not-for-profit institutions; *Number of Respondents:* 80,000; *Total Annual Responses:* 80,000; *Total Annual Hours:* 1.

To obtain copies of the supporting statement and any related forms for the proposed paperwork collections referenced above, access CMS's Web site

address at *http://www.cms.hhs.gov/regulations/pra/*, or e-mail your request, including your address, phone number, OMB number, and CMS document identifier, to *Paperwork@cms.hhs.gov*, or call the Reports Clearance Office on (410) 786–1326.

Written comments and recommendations for the proposed information collections must be mailed within 60 days of this notice directly to the CMS Paperwork Reduction Act Reports Clearance Officer designated at the address below:

CMS, Office of Strategic Operations and Regulatory Affairs, Division of Regulations Development, Attention: Melissa Musotto, Room C5–14–03, 7500 Security Boulevard, Baltimore, Maryland 21244–1850.

Dated: December 8, 2004.

John P. Burke, III,

CMS Paperwork Reduction Act Reports Clearance Officer, Office of Strategic Operations and Regulatory Affairs Regulations Development Group.

[FR Doc. 04–27705 Filed 12–17–04; 8:45 am]

BILLING CODE 4120–03–P

DEPARTMENT OF HEALTH AND HUMAN SERVICES

Food and Drug Administration

Advisory Committees; Tentative Schedule of Meetings for 2005

AGENCY: Food and Drug Administration, HHS.

ACTION: Notice.

SUMMARY: The Food and Drug Administration (FDA) is announcing a tentative schedule of forthcoming meetings of its public advisory committees for 2005. During 1991, at the request of the Commissioner of Food and Drugs (the Commissioner), the Institute of Medicine (the IOM) conducted a study of the use of FDA's advisory committees. In its final report, one of the IOM's recommendations was for the agency to publish an annual tentative schedule of its meetings in the **Federal Register**. This publication implements the IOM's recommendation.

FOR FURTHER INFORMATION CONTACT: Theresa L. Green, Advisory Committee Oversight and Management Staff (HF–4), Food and Drug Administration, 5600 Fishers Lane, Rockville, MD 20857, 301–827–1220.

SUPPLEMENTARY INFORMATION: The IOM, at the request of the Commissioner, undertook a study of the use of FDA's advisory committees. In its final report in 1992, one of the IOM's recommendations was for FDA to adopt a policy of publishing an advance yearly schedule of its upcoming public advisory committee meetings in the **Federal Register**; FDA has implemented this recommendation. The annual publication of tentatively scheduled advisory committee meetings will provide both advisory committee members and the public with the opportunity, in advance, to schedule attendance at FDA's upcoming advisory committee meetings. Because the schedule is tentative, amendments to this notice will not be published in the **Federal Register**. However, changes to the schedule will be posted on the FDA advisory committees' Internet site located at *http://www.fda.gov/oc/advisory/default.htm*. FDA will continue to publish a **Federal Register** notice 15 days in advance of each upcoming advisory committee meeting, to announce the meeting (21 CFR 14.20).

The following list announces FDA's tentatively scheduled advisory committee meetings for 2005. You may also obtain up-to-date meeting information by calling the Advisory Committee Information Line, 1–800–741–8138 (301–443–0572 in the Washington, DC area).

Committee Name	Tentative Date(s) of Meetings	Advisory Committee 10–Digit Information Line Code
OFFICE OF THE COMMISSIONER		
Pediatric Advisory Committee	February 14–15, June-day to be announced, November-day to be announced	8732310001
Science Board to the Food and Drug Administration	April 15, November-day to be announced	3014512603
CENTER FOR BIOLOGICS EVALUATION AND RESEARCH		
Allergenic Products Advisory Committee	April 7	3014512388
Cellular, Tissue and Gene Therapies Advisory Committee (formerly Biological Response Modifiers Advisory Committee)	March 3–4, July 28–29, November 9–10	3014512389
Blood Products Advisory Committee	March 17–18, July 21–22, December 1–2	3014519516
Transmissible Spongiform Encephalopathies Advisory Committee	February 8–9, June 28–29, October 27–28	3014512392
Vaccines and Related Biological Products Advisory Committee	February 16–17, March 15–16, May 4–5, September 20–21, November 16–17	3014512391
CENTER FOR DRUG EVALUATION AND RESEARCH		
Anesthetic and Life Support Drugs Advisory Committee	May 24–25, July 20–21, November 9–10	3014512529
Anti-Infective Drugs Advisory Committee	To Be Announced	3014512530
Antiviral Drugs Advisory Committee	March 10–11, August 3–4	3014512531
Arthritis Advisory Committee	February 16–17, May 12–13, September 15–16	3014512532

Committee Name	Tentative Date(s) of Meetings	Advisory Committee 10–Digit Information Line Code
Cardiovascular and Renal Drugs Advisory Committee	February 24, April 5–6, June 15–16, August 17–18, November 16–17	3014512533
Dermatologic and Ophthalmic Drugs Advisory Committee	March 24–25—Joint Meeting with Nonprescription Drugs Advisory Committee, June 2–3, October 20–21, November 3–4	3014512534
Drug Safety and Risk Management Advisory Committee	March 8–9—Joint Meeting with Gastrointestinal Drugs Advisory Committee, June 2–3, October 20–21, November 3–4	3014512535
Endocrinologic & Metabolic Drugs Advisory Committee	January 13–14—Joint Meeting with Nonprescription Drugs Advisory Committee, May 5–6, September 22–23, December 13–14	3014512536
Gastrointestinal Drugs Advisory Committee	March 9—Joint Meeting with Drug Safety and Risk Management Advisory Committee, March 10, October–day to be announced	3014512538
Nonprescription Drugs Advisory Committee	January 13–14–Joint Meeting with Endocrinologic and Metabolic Drugs Advisory Committee March 23–25—Joint Meeting with Dermatologic and Ophthalmic Drugs Advisory Committee	3014512541
Oncologic Drugs Advisory Committee	March 2–3, May 11–12, September 13–14, December 7–8	3014512542
Peripheral and Central Nervous System Drugs	May 4	3014512543
Pharmaceutical Science, Advisory Committee for (Parent Committee)	April, October—Parent Committee-days to be announced April, November—Clinical Pharmacology Subcommittee-days to be announced March, June, September—Manufacturing Subcommittee-days to be announced	3014512539
Psychopharmacologic Drugs Advisory Committee	To be announced	3014512544
Pulmonary-Allergy Drugs Advisory Committee	April 27–28, August 30–31, December 12–13	3014512545
Reproductive Health Drugs, Advisory Committee for	To be announced	3014512537
CENTER FOR DEVICES AND RADIOLOGICAL HEALTH		
Device Good Manufacturing Practice Advisory Committee	December-day to be announced	3014512398
Medical Devices Advisory Committee (Comprised of 18 Panels)		
Anesthesiology and Respiratory Therapy Devices Panel	April 25–26, November 3–4	3014512624
Circulatory System Devices Panel	January 13, March 17, May 19, July 21, September 22, November 17	3014512625
Clinical Chemistry and Clinical Toxicology Devices Panel	March 21–22, April 21–22, May 23–24, July 11–12, September 8–9, December 5–6	3014512514
Dental Products Panel	April 11–12, July 18–19	3014512518
Ear, Nose, and Throat Devices Panel	February 24–25, April 28–29, June 20–21, August 1–2, October 6–7, December 1–2	3014512522
Gastroenterology-Urology Devices Panel	March 4, May 3, July 22, October 21	3014512523
General and Plastic Surgery Devices Panel	February 7–8, June 9–10, August 25–26, November 7–8	3014512519
General Hospital and Personal Use Devices Panel	February 10–11, May 9–10, August 8–9, December 5–6	3014512520
Hematology and Pathology Devices Panel	April 29, October 21	3014512515
Immunology Devices Panel	May 19, November 10	3014512516

Committee Name	Tentative Date(s) of Meetings	Advisory Committee 10–Digit Information Line Code
Medical Devices Dispute Resolution Panel	Meeting(s) scheduled as needed	3014510232
Microbiology Devices Panel	March 31–April 1, June 16–17, September 19–20, December 8–9	3014512517
Molecular and Clinical Genetics Panel	April 18–19, October 17–18	3014510231
Neurological Devices Panel	April 28–29, June 20–21, September 22–23, December 1–2	3014512513
Obstetrics and Gynecology Devices Panel	March 10–11, May 16–17, August 15–16, November 14–15	3014512524
Ophthalmic Devices Panel	March 17–18, May 12–13, July 28–29, September 29–30, November 17–18	3014512396
Orthopaedic and Rehabilitation Devices Panel	January 31–February 1, April 7–8, July 25–26, November 3– 4	3014512521
Radiological Devices Panel	February 1, May 10, August 2, November 1	3014512526
National Mammography Quality Assurance Advisory Committee	April 18	3014512397
Technical Electronic Product Radiation Safety Standards Committee	May 18	3014512399
CENTER FOR FOOD SAFETY AND APPLIED NUTRITION		
Food Advisory Committee—Parent	July-day to be announced	3014510564
Additives and Ingredients Subcommittee	June-day to be announced	Do.
Biotechnology Subcommittee	July-day to be announced	Do.
Contaminants and Natural Toxicants Subcommittee	November-day to be announced	Do.
Dietary Supplements Subcommittee	To be announced	Do.
Infant Formula Subcommittee	August-day to be announced	Do.
Nutrition Subcommittee	To be announced	Do.
CENTER FOR VETERINARY MEDICINE		
Veterinary Medicine Advisory Committee	January 31, May 19, October 20	3014512548
NATIONAL CENTER FOR TOXICOLOGICAL RESEARCH (NCTR)		
Science Advisory Board to NCTR	March 30–31	3014512559
Advisory Committee on Special Studies Relating to the Possible Long-Term Health Effects of Phenoxy Herbicides and Contaminants	May, September, November-days to be announced	3014512560

Dated: December 8, 2004.

Sheila Dearybury Walcoff,

Associate Commissioner for External Relations.

[FR Doc. 04–27737 Filed 12–17–04; 8:45 am]

BILLING CODE 4160–01–S

DEPARTMENT OF HEALTH AND HUMAN SERVICES

Food and Drug Administration

[Docket No. 2004D–0524]

Draft Guidance for Industry on ANDAs: Pharmaceutical Solid Polymorphism; Chemistry, Manufacturing, and Controls Information; Availability

AGENCY: Food and Drug Administration, HHS.

ACTION: Notice.

SUMMARY: The Food and Drug Administration (FDA) is announcing the availability of a draft guidance for industry entitled ''ANDAs: Pharmaceutical Solid Polymorphism; Chemistry, Manufacturing, and Controls Information.'' The draft guidance is intended to assist applicants with the submission of abbreviated new drug applications (ANDAs) when a drug substance exists in polymorphic forms.

DATES: Submit written or electronic comments on the draft guidance by March 21, 2005. General comments on

agency guidance documents are welcome at any time.

ADDRESSES: Submit written requests for single copies of the draft guidance to the Division of Drug Information (HFD–240), Center for Drug Evaluation and Research, Food and Drug Administration, 5600 Fishers Lane, Rockville, MD 20857. Send one self-addressed adhesive label to assist that office in processing your requests. Submit written comments on the draft guidance to the Division of Dockets Management (HFA–305), Food and Drug Administration, 5630 Fishers Lane, rm. 1061, Rockville, MD 20852. Submit electronic comments to *http://www.fda.gov/dockets/ecomments*. See the **SUPPLEMENTARY INFORMATION** section for electronic access to the draft guidance document.

FOR FURTHER INFORMATION CONTACT: Andre Raw, Center for Drug Evaluation and Research (HFD–620), Food and Drug Administration, 5600 Fishers Lane, Rockville, MD 20857, 301–827–5758.

SUPPLEMENTARY INFORMATION:

I. Background

FDA is announcing the availability of a draft guidance for industry entitled ''ANDAs: Pharmaceutical Solid Polymorphism; Chemistry, Manufacturing, and Controls Information.'' This draft guidance provides: (1) A framework for making regulatory decisions on drug substance sameness in terms of polymorphic form, and (2) decision trees which provide a recommended course to monitor and control polymorphs in the drug substance and/or drug product when the drug substance exists in relevant polymorphic forms.

This draft guidance is being issued consistent with FDA's good guidance practices regulation (21 CFR 10.115). The draft guidance, when finalized, will represent the agency's current thinking on pharmaceutical solid polymorphism. It does not create or confer any rights for or on any person and does not operate to bind FDA or the public. An alternative approach may be used if such approach satisfies the requirements of the applicable statutes and regulations.

II. Comments

Interested persons may submit to the Division of Dockets Management (see **ADDRESSES**) written or electronic comments on the draft guidance. Two copies of any comments are to be submitted, except that individuals may submit one copy. Comments are to be identified with the docket number found in brackets in the heading of this document. The draft guidance and received comments are available for public examination in the Division of Dockets Management between 9 a.m. and 4 p.m., Monday through Friday.

III. Electronic Access

Persons with access to the Internet may obtain the document at *http://www.fda.gov/cder/guidance/index.htm* or *http://www.fda.gov/ohrms/dockets/default.htm*.

Dated: December 11, 2004.

Jeffrey Shuren,

Assistant Commissioner for Policy.

[FR Doc. 04–27736 Filed 12–17–04; 8:45 am]

BILLING CODE 4160–01–S

DEPARTMENT OF HEALTH AND HUMAN SERVICES

National Institutes of Health

Submission for OMB Review; Comment Request; The Framingham Study

SUMMARY: Under the provisions of Section 3507(a)(1)(D) of the Paperwork Reduction Act of 1995, the National Heart, Lung, and Blood Institute (NHLBI), the National Institutes of Health (NIH) has submitted to the Office of the Management and Budget (OMB) a request for review and approval the information collection listed below. This proposed information collection was previously published in the **Federal Register** on March June 30, 2004, page 39486, and allowed 60-days for public comment. No public comments were received. The purpose of this notice is to allow an additional 30 days for public comment. The National Institutes of Health may not conduct or sponsor, and the respondent is not required to respond to, an information collection that has been extended, revised, or implemented on or after October 1, 1995, unless it displays a currently valid OMB control number.

Proposed Collection: Title: The Framingham Study. *Type of Information Collection Request:* Reinstatement of a currently approved collection (OMB No. 0925–0216). *Need and Use of Information Collection:* This study will conduct examinations and morbidity and mortality follow-up in original, offspring, and third-generation participants to study the determinants of cardiovascular disease. *Frequency of Response:* The participants will be contacted annually. *Affected Public:* Individuals or households, businesses or other for profit, small businesses or organizations. *Type of Respondents:* Adult men and women; doctors and staff of hospitals and nursing homes. The annual reporting burden is as follows: *Estimated Number or Respondents:* 5,649; *Estimated Number of Responses Per Respondent:* 2.29; *Average Burden Hours Per Response:* 0.6; and *Estimated Total Annual Burden Hours Requested:* 6,886. There are no capital, operating or maintenance costs to report.

Type of respondents	Estimated number of respondents	Estimated number of responses per respondent	Average burden hours per response	Estimated total annual burden hours requested
Participants	3,513	2.86	0.606	6,085
Physician, hospital, nursing home staff	1,068	1.0	0.67	716
Participant's next of kin	1,068	1.0	.08	85
Total	6,649	2.29		6,886

Request for Comments: Written comments and/or suggestions from the public and affected agencies should address one or more of the following points: (1) Evaluate whether the proposed collection of information is necessary for the proper performance of the function of the agency, including whether the information will have practical utility; (2) evaluate the accuracy of the agency's estimate of the burden of the proposed collection of information, including the validity of the methodology and assumptions used; (3) enhance the quality, utility, and clarity of the information to be collected; and (4) minimize the burden of the collection of information on those

who are to respond, including the use of appropriate automated, electronic, mechanical, or other technological collection techniques or other forms of information technology.

Direct Comments To OMB: Written comments and/or suggestions regarding the item(s) contained in this notice, especially regarding the estimated public burden and associated response time, should be directed to the: Office of Management and Budget, Office of Regulatory Affairs, New Executive Office Building, Room 10235, Washington, DC 20503, Attention: Desk Officer for NIH. To request more information on the proposed project or to obtain a copy of the data collection plans and instruments, contact: Dr. Paul Sorlie, NIH, NHLBI, 6701 Rockledge Drive, MSC 7934, Bethesda, MD 20892–7934, or call non-toll-free number (301) 435–0707 or E-mail your request, including your address to: *SorlieP@nhlbi.nih.gov.*

Comments Due Date: Comments regarding this information collection are best assured of having their full effect if received within 30-days of the date of this publication.

Dated: December 7, 2004.

Peter Savage,

Director, DECA, NHLBI.

[FR Doc. 04–27724 Filed 12–17–04; 8:45 am]

BILLING CODE 4167–01–M

DEPARTMENT OF HEALTH AND HUMAN SERVICES

National Institutes of Health

Government-Owned Inventions; Availability for Licensing

AGENCY: National Institutes of Health, Public Health Service, DHHS.

ACTION: Notice.

SUMMARY: The inventions listed below are owned by an agency of the U.S. Government and are available for licensing in the U.S. in accordance with 35 U.S.C. 207 to achieve expeditious commercialization of results of federally-funded research and development. Foreign patent applications are filed on selected inventions to extend market coverage for companies and may also be available for licensing.

ADDRESSES: Licensing information and copies of the U.S. patent applications listed below may be obtained by writing to the indicated licensing contact at the Office of Technology Transfer, National Institutes of Health, 6011 Executive Boulevard, Suite 325, Rockville, Maryland 20852–3804; telephone: 301/496–7057; fax: 301/402–0220. A signed Confidential Disclosure Agreement will be required to receive copies of the patent applications.

Human Monoclonal Antibodies Against Hendra and Nipah Viruses

Dimiter S. Dimitrov et al. (NCI). U.S. Provisional Application filed 1 Nov 2004 (DHHS Reference No. E–004–2005/0–US–01); Related to the Phage Display Library described in DHHS Reference No. E–005–2005/0.

Licensing Contact: Michael Shmilovich; 301/435–5019; *shmilovm@mail.nih.gov.*

Available for licensing are neutralizing human monoclonal antibodies against the envelope proteins (Envs) of Hendra virus (HeV) and Nipah virus (NiV) for uses in immunotherapy, vaccine development and as diagnostic or research reagents. Monoclonal antibody variable region fragments (Fabs and scFvs) have been isolated from screening a human phage display library against the Envs. The phage display library (DHHS Ref. No. E–005–2005) is useful for screening other viral or cancer antigens and can be licensed from DHHS under a biological materials license.

In addition to licensing, the technology is available for further development through collaborative research with the inventors via a Cooperative Research and Development Agreement (CRADA).

Human Antibody Phage Display Library

Dimiter S. Dimitrov et al. (NCI). DHHS Reference No. E–005–2005/0—Research Tool; Related to the Monoclonal Antibodies Against Hendra and Nipah Viruses described in U.S. Provisional Application filed 1 Nov 2004 (DHHS Reference No. E–004–2005/0–US–01).

Licensing Contact: Michael Shmilovich; 301/435–5019; *shmilovm@mail.nih.gov.*

Available for licensing as a biological material for either internal use or commercial distribution is a human F_{ab} immunoglobulin/antibody fragment phage display library. The library contains 10^{10} F_{abs} derived from the peripheral blood of ten (10) healthy human donors. The high quality of the library was demonstrated in the successful selection of high affinity antibodies specific for Hendra and Nipah viruses; however, the library is useful for selecting a variety of antigen specific immunoglobulin/antibody F_{ab} fragments especially for cancer or viruses.

In addition to licensing, the technology is available for further development through collaborative research with the inventors via a Cooperative Research and Development Agreement (CRADA).

Vaccines Against Crimean-Congo Hemorrhagic Fever

Dimiter Dimitrov and Xiadong Xiao (NCI). U.S. Provisional Patent Application filed 3 Nov 2004 (DHHS Reference Nos. E–299–2004/0–US–01 and E–299–2004/1–US–01).

Licensing Contact: Michael Shmilovich; 301/435–5019; *shmilovm@mail.nih.gov.*

Crimean-Congo hemorrhagic fever (CCHF) is a tick-borne public health concern in many regions of the world including Africa, the Middle East, Europe, and Western Asia. The disease is etiologically linked to Crimean-Congo hemorrhagic fever virus (CCHFV) from the *Nairovirus* genus of the *Bunyaviridae* family of viruses and is transmitted primarily through the bite of *Ixodid* ticks. Available for licensing and commercial development are antigens, immunogens, and nucleic acid constructs for the development of vaccines against CCHFV. The antigens and immunogens are peptides corresponding to the soluble ectodomains of CCHFV G1 (Gc) and G2 (Gn) glycoproteins. Also provided are coupled proteins that include soluble peptide fragments derived from the G1 (Gc) or G2 (Gn) ectodomains or portions thereof; peptidomimetics; vaccines; immunogenic compounds methods for vaccination and inhibitors of CCHFV cell entry. Expression vectors and DNA vaccines encoding these peptides are also within the scope of the invention as well as antibodies, aptamers and kits containing antibodies or aptamers that bind to these peptides. CCHFV has been implicated as a pathogen of biodefense significance.

Intracellular Contrast Agents for Magnetic Resonance Imaging

Mrinal K. Dewanjee (NIHCC). U.S. Provisional Patent Application filed 8 Oct 2004 (DHHS Reference No. E–291–2004/0–US–01).

Licensing Contact: Michael Shmilovich; 301/435–5019; *shmilovm@mail.nih.gov.*

Available for licensing and commercial development are contrast agents for magnetic resonance imaging (MRI). These agents are composed of charge neutral and lipid-soluble complexes of paramagnetic cations bound by chelators. Unlike conventional extra-cellular contrast agents, these agents of the present

invention penetrate into the cells and thus permit higher spatial resolution in MRI. The paramagnetic cation is preferably Gd^{+3}, Dy^{+3} and Fe^{+3} with three equivalents of a charge neutralizing chelator that provides a neutral lipid-soluble complex of the paramagnetic cation. The complex is extracted rapidly and retained intracellularly, when mammalian cells are incubated in buffer or plasma media. Hence, they may be used in imaging vascular plaque after intra-arterial injection and tracking the distribution patterns of injected immune cells in localizing the inflammatory disease or implanted stem cells in regenerative medicine.

Electromagnetically Tracked Tissue Ablation Device

Bradford J. Wood (NIHCC). U.S. Provisional Patent Application filed 5 Nov 2004 (DHHS Reference No. E–278–2004/0–US–01).

Licensing Contact: Michael Shmilovich; 301/435–5019; *shmilovm@mail.nih.gov.*

Available for licensing, development, manufacturing and commercial distribution is an ablation device coupled with electromagnetic tracking for procedural navigation. Minimally invasive interventions exemplified by devices like this are rapidly increasing in popularity. This device improves accuracy and may improve outcomes by using pre-procedural imaging (like CT, MRI, PET) during procedures, to assist with guidance of ablation probes to a target that shows up on pre-procedural imaging. This allows use of exquisite diagnostic imaging during interventional procedures, that otherwise would not be available. This device is similar to having a miniaturized version of an automobile GPS (global positioning system) on the tip of a small needle. Image guided surgery is not truly ''image guided'' without being able to use all pre-operative imaging during the procedure. One example allows accurate identification and treatment of a tumor that is only briefly seen on CT scan, then disappears, or is only seen with PET. Tissue burns during thermal ablation, releasing gas that obscures the real-time ultrasound image. This device allows use of CT and other enhanced imaging during repositioning of ablation needles, which is the most difficult part of the procedure.

One design can include a guidance needle and grid to direct the ablation needle. Another design includes a plate with an aperture and button coupled to the plate wherein the plate has a beveled surface and a slideable hub coupled to the plate by a rod. An added advantage is an inclusion of a plurality of guide apertures to focus the needle. The needle is inserted into and guided by one of the guide apertures of the grid as the needle is introduced into a body of a patient to a target site. The device is useful for therapy or for biopsy and includes a button defining an aperture, a hub defining an aperture being slideably coupled to the button by a rod, and a lock mechanism configured to lock the hub relative to the button on the rod. The system also includes a removable probe inserted through the hub and the button and a miniature magnetically trackable sensor coil that fits inside a 22 Gauge needle. A pictorial representation of the device is shown here.

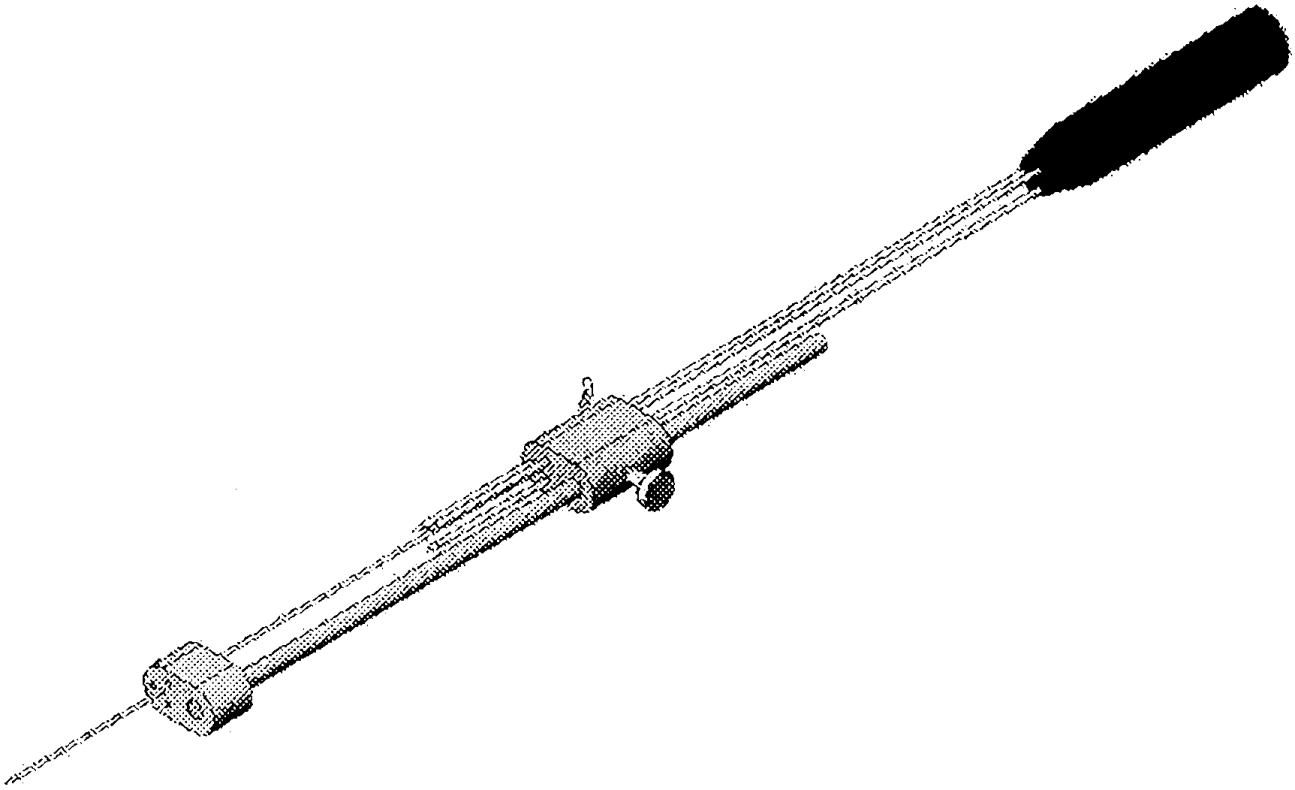

In addition to licensing, the technology is available for further development through collaborative research with the inventors via a Cooperative Research and Development Agreement (CRADA).

Grid Etcher for Generating Defined Growth Areas

Rea Ravin, James Sullivan, Daniel Hoeppner, David Munno, Ronald

McKay (NINDS). U.S. Patent Application filed 14 Oct 2004 (DHHS Reference No. E–125–2004/0–US–01).

Licensing Contact: Michael Shmilovich; 301/435–5019; *shmilovm@mail.nih.gov.*

Available for licensing and commercial development is a cell culture tool kit for etching confined growth areas on substrates coated with tissue culture growth matrix, such as fibronectin. The kit includes three components: an etching comb (etcher) with rectangular teats, a back plate, and an open chamber with guides to direct the etcher.

Overview: Cells are plated over a glass cover slide previously coated with growth matrix. Perpendicular channels are etched into the culture, removing both growth matrix and plated cells, resulting in rectangular growth areas containing only the cells plated originally to each growth area. This protocol allows high-density cultures to grow freely within a confined growth area. Specifically, this procedure prevents emigration out of the growth area and also prevents immigration from individual cells or sphere clusters into the growth area, common if cells are plated on pre-defined surfaces.

Method: A coated cover slide is plated with cells. The cover slide is then sandwiched between the back plate, and open chamber with etching guides, then secured in place. The chamber is filled with media and the etcher is drawn across the cover slip to generate a first set of channels. The etcher is then drawn across the cover slip in a perpendicular direction to generate a second set of channels, resulting in rectangular growth areas. The number of the teats on the etcher determines the number of squares in the grid, the width of each teat will determine the distance between the squares and the gap between the teats will determine the size of the squares.

This tool kit enables the production of a slide for monitoring dynamic cell processes especially for the proliferation and migration of stem cells or other migratory cells. Beside complexity, a significant problem with existing containment systems is the inability to keep cells within the field of observation and to keep out cells not present in the field of view at the onset of the experiment. The present invention provides a simple and flexible solution that enables long-term cell culture in a defined growth area.

Chlorine Dioxide Gas Decontamination Apparatus

Deborah E. Wilson, D.Ph. (ORS). U.S. Provisional Application 60/620,095 filed 18 Oct 2004 (DHHS Reference No. E–190–2004/0-US–01).

Licensing Contact: Michael Shmilovich; 301/435–5019; *shmilovm@mail.nih.gov.*

Available for licensing and commercial development is an apparatus for decontaminating articles and areas contaminated with one or more biosafety level 2, 3, or 4 pathogens. Particularly, the focus of decontamination is a piece of laboratory equipment, such as a biological safety cabinet. The apparatus is portable, and includes a moveable cart, a source of chlorine dioxide gas, a humidification means, an inlet conduit for introducing a flow of chlorine dioxide gas from the source of chlorine dioxide gas into the environment and for simultaneously humidifying the environment, and an outlet conduit for withdrawing gas from the environment. The apparatus further includes a blower for circulating gas between the environment to the humidifier and vice versa. Of particular advantage, the moveable cart weighs less than 200 pounds. The patent application covering this apparatus can be reviewed under a confidentiality nondisclosure agreement.

Dated: December 9, 2004.

Steven M. Ferguson,

Director, Division of Technology Development and Transfer, Office of Technology Transfer, National Institutes of Health.

[FR Doc. 04–27723 Filed 12–17–04; 8:45 am]

BILLING CODE 4140–01–P

DEPARTMENT OF HEALTH AND HUMAN SERVICES

National Institutes of Health

Government-Owned Inventions; Availability for Licensing

AGENCY: National Institutes of Health, Public Health Service, DHHS.

ACTION: Notice.

SUMMARY: The inventions listed below are owned by an agency of the U.S. Government and are available for licensing in the U.S. in accordance with 35 U.S.C. 207 to achieve expeditious commercialization of results of federally-funded research and development. Foreign patent applications are filed on selected inventions to extend market coverage for companies and may also be available for licensing.

ADDRESSES: Licensing information and copies of the U.S. patent applications listed below may be obtained by writing to the indicated licensing contact at the Office of Technology Transfer, National Institutes of Health, 6011 Executive Boulevard, Suite 325, Rockville, Maryland 20852–3804; telephone: 301/496–7057; fax: 301/402–0220. A signed Confidential Disclosure Agreement will be required to receive copies of the patent applications.

Methods and Compositions for Protecting Cells From Ultrasound-Mediated Cytolysis

Joe Z. Sostaric (NCI), Norio Miyoshi (EM), Peter Riesz (NCI).

U.S. Provisional Application No. 60/620,258 filed 19 Oct 2004 (DHHS Reference No. E–311–2004/0–US–01).

Licensing Contact: Michael Shmilovich; 301/435–5019; *shmilovm@mail.nih.gov.*

Available for licensing and commercial development are methods for protecting cells from ultrasound-mediated cytolysis. Therapeutic uses of ultrasound (*e.g.*, sonoporation, thrombolysis, HIFU, sonophoresis, acoustic hemostasis) may induce changes in tissue state, including apoptosis and cytolysis, through thermal effects (*e.g.*, hyperthermia), mechanical effects (*e.g.*, acoustic cavitation or through radiation force, acoustic streaming and other ultrasound induced forces), and chemical effects (via sonochemistry or by the activation of solutes by sonoluminescence). Furthermore, ultrasound exposure conditions in biological processes, *e.g.* ultrasound bioreactors, are limited by the need to decrease cytolysis of microbes or animal and plant cells. Accordingly, the protecting molecules used to carry out the methods of the invention possess the ability to protect cells against ultrasound mediated cytolysis, without hindering ultrasound induced physical effects that could be utilized to create beneficial effects. The protecting solutes are surface active and possess at least one ''carbohydrate unit'' as described. The solutes include, but are not limited to: alkyl-β-D-thioglucopyranoside, alkyl-β-D-thiomaltopyranoside, alkyl-β-D-galactopyranoside, alkyl-β-D-thiogalactopyranoside, or alkyl-β-D-maltrioside, hexyl-β-D-glucopyranoside, heptyl-β-D-glucopyranoside, octyl-β-D-glucopyranoside, nonyl-β-D-glucopyranoside, hexyl-β-D-maltopyranoside, n-octyl-β-D-maltopyranoside, n-octyl-β-D-thioglucopyranoside, 2-propyl-1-pentyl-β-D-maltopyranoside, methyl-6-O-(N-heptylcarbamoyl)-α-D-glucopyranoside, 3-cyclohexyl-1-propyl-β-D-glucoside, 6-O-methyl-n-heptylcarboxyl-α-D-glucopyranoside.

In addition to licensing, the technology is available for further

development through collaborative research with the inventors via a Cooperative Research and Development Agreement (CRADA).

Treatment of Human Viral Infections (Imatinib)

Drs. Steven Zeichner and Vyjayanthi Krishnan (NCI).

U.S. Provisional Application No. 60/588,015 filed 13 Jul 2004 (DHHS Reference No. E–281–2004/0–US–01).

Licensing Contact: Sally Hu; 301/435–5606; *hus@mail.nih.gov.*

This application describes the methods for treating or preventing a HIV infection by the administration of *abl*-kinase inhibitor called imatinib and its derivatives. Several available agents can inhibit HIV replication by targeting one or another viral protein, such as the viral reverse transcriptase, protease, envelope fusion process, or integrase, or by targeting the interaction of a viral component with a host cell component, for example the host cell viral receptor or co-receptor. However, HIV can readily become resistant to these drugs, and new therapeutic approaches for HIV infection are needed. The studies described in the application show that the expression of many host cell genes changes in response to HIV replication, and show that targeting one of these changes with imatinib can inhibit viral replication. Thus targeting the host cell, and making the host cell less hospitable to the virus can inhibit viral replication. The application thus describes a new agent that inhibits viral replication by acting on the host cell, which may offer new approaches to therapy for HIV infection. These approaches may be less likely to engender rapid resistance in the virus to the therapy.

This abstract replaces one published in the **Federal Register** on Friday, October 22, 2004 (69 FR 62060).

Dated: December 13, 2004.

Steven M. Ferguson,

Director, Division of Technology Development and Transfer, Office of Technology Transfer, National Institutes of Health.

[FR Doc. 04–27780 Filed 12–17–04; 8:45 am]

BILLING CODE 4140–01–P

DEPARTMENT OF HEALTH AND HUMAN SERVICES

National Institutes of Health

Government-Owned Inventions; Availability for Licensing

AGENCY: National Institutes of Health, Public Health Service, DHHS.

ACTION: Notice.

SUMMARY: The inventions listed below are owned by an agency of the U.S. Government and are available for licensing in the U.S. in accordance with 35 U.S.C. 207 to achieve expeditious commercialization of results of federally-funded research and development. Foreign patent applications are filed on selected inventions to extend market coverage for companies and may also be available for licensing.

ADDRESSES: Licensing information and copies of the U.S. patent applications listed below may be obtained by writing to the indicated licensing contact at the Office of Technology Transfer, National Institutes of Health, 6011 Executive Boulevard, Suite 325, Rockville, Maryland 20852–3804; telephone: (301) 496–7057; fax: (301) 402–0220. A signed Confidential Disclosure Agreement will be required to receive copies of the patent applications.

AAV4 Vector and Uses Thereof

John A. Chiorini (NHLBI/NIDCR), Robert M. Kotin (NHLBI), Brian Safer (NHLBI). U.S. Patent 6,468,524 issued 22 Oct 2002 (DHHS Reference No. E–071–2000/0–US–01).

Licensing Contact: Jesse Kindra; (301) 435–5559; *kindraj@mail.nih.gov.*

The invention described and claimed in this patent application relates to the delivery of heterologous nucleic acids or genes to particular target cells. In particular, the application relates to methods of delivering a heterologous nucleic acid or gene of interest to particular target cells using Adeno-Associated Virus of serotype 4 (AAV4). The particular target cells identified are the ependymal cells of the brain. The methods described herein may be useful in carrying out gene therapy for diseases of the brain or central nervous system.

This work has been published in part at Davidson, BL, *et al.* ''Recombinant adeno-associated virus type 2, 4, and 5 vectors: transduction of variant cell types and regions in the mammalian central nervous system'' PNAS USA 97(7):3428–32 (March 28, 2000).

In addition, PHS owns additional intellectual property related to this technology describing an AAV4-based vector system. The material contained in the patent application has been published as WO 98/11244 (March 19, 1998) and the research corresponding thereto has been published in J. Virology 71(9): 6823–33 (Sept 1997).

AAV5 Vector for Transducing Brain Cells and Lung Cells

John A. Chiorini (NHLBI/NIDCR), Robert M. Kotin (NHLBI).

U.S. Patent Application No. 09/533,427 filed 22 Mar 2000 (DHHS Reference No. E–072–2000/0–US–01).

Licensing Contact: Jesse Kindra; (301) 435–5559; *kindraj@mail.nih.gov.*

The invention described and claimed in this patent application is related to the delivery of heterologous nucleic acids or genes to particular target cells. In particular, the application relates to methods of delivering a heterologous nucleic acid or gene of interest to particular target cells using an Adeno-Associated Virus of serotype 5 (AAV5). The particular target cells identified include the alveolar cells of the lung and cerebellar and ependymal cells of the brain. The methods described herein may be useful in carrying out gene therapy related to diseases of the brain or central nervous system and the respiratory tract.

This work has been published, in part, at Davidson BL, *et al.* PNAS, USA 97(7):3428–32 (March 28, 2000) and Zabner J, *et al.* J Virol. 74(8):3852–8 (April 2000).

In addition to this patent application, PHS owns additional intellectual property related to this technology. The patent application has been published as WO 99/61601 on December 2, 1999 and the research corresponding thereto has been published at Chiorini JA, *et al.* J. Virol. 73(5): 4293–98 (May 1999) and Chiorini JA, *et al.* J. Virol. 73(2): 1309–19 (Feb. 1999).

TTP as a Regulator of GM-CSF mRNA Deadenylation and Stability

Ester Carballo-Jane, Wi S. Lai, Perry J. Blackshear (NIEHS). U.S. Provisional Application No. 60/148,810 filed 13 Aug 1999 (DHHS Reference No. E–204–1999/0–US–01); PCT Application No. PCT/US00/22199 filed 12 Aug 2000, which published as WO 01/12213 on 22 Feb 2001 (DHHS Reference No. E–204–1999/0–PCT–02); U.S. Patent Application No. 10/049,586 filed 12 Feb 2002 (DHHS Reference No. E–204–1999/0–US–03).

Licensing Contact: Jesse Kindra; (301) 435–5559; *kindraj@mail.nih.gov.*

The disclosed invention provides materials and methods to treat granulocytopenia (low white cell count in the blood) which is characterized by a reduced number of granulocytes (relative) or an absence of granulocytes (absolute). This condition is commonly associated with cancer chemotherapy, but is seen less frequently in a number of conditions including the use of propylthiouracil, radiotherapy for marrow ablation for bone marrow transplantation, aplastic anemia, systemic lupus erythematosus, AIDS and a variety of other situations. The

invention proposes a method to increase GM–CSF levels in a treated subject, and this increase is achieved by inhibiting the degradation of GM–CSF messenger RNA (mRNA). Tristetraprolin (TTP) is one member of a family of cys-cys-cys-his (CCCH) zinc finger proteins, and it is a factor that binds to and causes the instability of GM–CSF mRNA. Methods are provided for the development of screening assays for molecules that inhibit the binding of TTP and its related proteins to GM–CSF mRNA, or otherwise inhibit the effect of TTP to promote breakdown of the mRNA, leading in turn to increased mRNA stability and enhanced production of GM–CSF. Compounds identified by such screens, and their derivatives, could be useful in treating granulocytopenia from whatever cause.

Additional information about this technology may be found in the following research articles:

Carballo, E, Lai, WS and Blackshear, PJ. Evidence that tristetraprolin (TTP) is a physiological regulator of granulocyte-macrophage colony-stimulating factor (GM–CSF) mRNA deadenylation and stability. 2000; Blood 95:1891–1899.

Lai, WS, Carballo, E, Thorn, JM, Kennington, EA and Blackshear, PJ. Interactions of CCCH zinc finger proteins with mRNA. 1. Binding of tristetraprolin-related zinc finger proteins to AU-rich elements and destabilization of mRNA. 2000; J. Biol. Chem., 275:17827–19837.

In addition to licensing, the technology is available for further development through collaborative research with the inventors via a Cooperative Research and Development Agreement (CRADA).

Dated: December 13, 2004.

Steven M. Ferguson,

Director, Division of Technology Development and Transfer, Office of Technology Transfer, National Institutes of Health.

[FR Doc. 04–27782 Filed 12–17–04; 8:45 am]

BILLING CODE 4140–01–P

DEPARTMENT OF HEALTH AND HUMAN SERVICES

National Institutes of Health

Government-Owned Inventions; Availability for Licensing

AGENCY: National Institutes of Health, Public Health Service, DHHS.

ACTION: Notice.

SUMMARY: The inventions listed below are owned by an agency of the U.S. Government and are available for licensing in the U.S. in accordance with 35 U.S.C. 207 to achieve expeditious commercialization of results of federally-funded research and development. Foreign patent applications are filed on selected inventions to extend market coverage for companies and may also be available for licensing.

ADDRESSES: Licensing information and copies of the U.S. patent applications listed below may be obtained by writing to the indicated licensing contact at the Office of Technology Transfer, National Institutes of Health, 6011 Executive Boulevard, Suite 325, Rockville, Maryland 20852–3804; telephone: (301) 496–7057; fax: (301) 402–0220. A signed Confidential Disclosure Agreement will be required to receive copies of the patent applications.

The Use of Rabbits With Defined Immunoglobulin Light Chain Genes (C_{kappa} b Allotypes) To Optimize Production of Chimeric and Humanized Monoclonal Antibodies for Therapeutic, Imaging and Diagnostic Applications

Rose G. Mage, Cornelius Alexander (NIAID).

DHHS Reference No. E–332–2004/0—Research Tool.

Licensing Contact: Pradeep Ghosh; (301) 435–5282; *ghoshpr@mail.nih.gov.*

Biological materials are important research tools that can be used for diagnostic as well as therapeutic purposes. Antibodies have become viable drugs in the market today and there is a general market need for systems that may facilitate production of efficient and effective antibodies. In recent years, monoclonal antibodies have gained significant importance in their use, both as diagnostics and therapeutics, to intervene and combat diseases such as cancer, cardiovascular diseases, and infections. The present invention relates to the discovery of rabbits, genetically defined as b9, as the biological vehicle for the isolation of chimeric phage displaying Fab with human constant regions and rabbit immunoglobulin heavy and light chain variable regions for the development of diagnostic antibodies and humanized monoclonal therapeutic antibodies of high affinity and specificity (Popkov et al., J. Molec. Biol. 325: 325–335, 2003; Popkov et al. J. Immunol. Methods 288: 149–164, 2004). Recently, many effective antibodies have been developed as a result of the integration of antibody libraries with phage display technology. The rabbit model described in this invention may be used for production of antibodies that may cross react with both human and mouse antigens. Rabbit monoclonal antibodies that react with both human and mouse antigens are of particular relevance for the preclinical evaluation of therapeutic antibodies in mouse models of human diseases. Therefore, this invention has a broad commercial potential in its use as a source for producing monoclonal antibodies for therapeutic interventions in infectious, autoimmune and neurological diseases, nerve damage and cancer.

Methods for Diagnosis of Atherosclerosis

Paul Hwang et al. (NHLBI).

U.S. Provisional Application No. 60/607,031 filed 03 Sep 2004 (DHHS Reference No. E–276–2004/0–US–01).

Licensing Contact: Fatima Sayyid; 301/435–4521; *sayyidf@mail.nih.gov.*

In industrialized countries coronary heart disease and stroke due to atherosclerosis are the leading causes of morbidity and mortality. Coronary heart disease is the single largest cause of death in the U.S.A. and will cost approximately $133.2 billion according to the 2004 American Heart Association statistics update.

The identification of more sensitive and specific markers of atherosclerosis that are non-invasive and cost-effective may have profound impacts on public health. One such strategy involves the detection of marker genes or their products in blood or serum. Such markers may help identify high-risk patients with subclinical atherosclerosis who may benefit from intensive primary prevention or they may help determine the activity of established disease for monitoring response to treatment, resulting in more targeted secondary prevention.

The present invention relates to methods for detecting atherosclerosis using highly reactive biomarkers (FOS and/or DUSP1) expressed in blood cells or released into serum. Because these markers are also involved in pathogenesis, they may serve as potential targets for drug discovery and for intervention to modify disease progression.

An Improved Method To Separate and Expand Antigen-Specific T Cells

Jonming Li and John Barrett (NHLBI).

U.S. Provisional Application No. 60/606,197 filed 31 Aug 2004 (DHHS Reference No. E–246–2004/0–US–01).

Licensing Contact: Fatima Sayyid; (301) 435–4521; *sayyidf@mail.nih.gov.*

Stem cell transplants can be used to treat patients with leukemia or other disorders. Transplanted donor T cells (lymphocytes) exert strong alloimmune

graft versus leukemia and other anti-tumor effects however they can also cause potentially lethal graft versus host disease (GVHD), requiring post-transplant immunosuppression. Such immunosuppression may place patients at a greater risk of contracting potentially fatal cytomegalovirus infection further reducing their capacity to be cured of their malignant disease.

The transfer of T lymphocytes specific for leukemia cells or micro-organism antigens can be useful since therapeutic immune effects would be enhanced while GVHD reactions would not be induced. Currently available methods for isolating and expanding antigen-specific T cells including selection using HLA tetramers, magnetic beads binding to activation markers or laborious limiting dilution techniques are unreliable, poorly reproducible, expensive and impede clinical progress.

The present invention relates to methods for selecting and expanding antigen specific T-cells that recognize a pre selected target antigen, to purified populations of antigen-specific T cells that recognize a pre selected target antigen and to therapeutic uses of antigen-specific T cells that recognize a pre selected target antigen. Potential applications include treatment of cytomegalovirus, Epstein-Barr virus and adenovirus reactivation following stem cell transplantation or organ transplantation, prevention and treatment of leukemic relapse after transplantation or chemotherapy using autologous expanded T cells, and selective depletion of alloreactive T cells from transplants which may produce GVHD.

Novel Compounds for Selectively Inactivating Pain Pathways

Peter Blumberg, Jeewoo Lee (NCI).
U.S. Provisional Application No. 60/558,003 filed 26 Mar 2004 (DHHS Reference No. E–141–2004/0–US–01).
Licensing Contact: Norbert Pontzer; 301/435–5502; *pontzern@mail.nih.gov.*

Available for licensing are compositions and methods for the long-term control of pain and other pathological conditions caused by the over-activity of pain pathways. Neurons in the dorsal root, trigeminal and nodose ganglia project unmyelinated C-fibers and Aδ-fibers that transmit pain and temperature sensation between the periphery and spinal cord. Along with acute and chronic pain, over activation of those pathways leads to neurogenic and neuropathic inflammation leading to such conditions as post-herpetic neuralgia, diabetic neuropathy, cystitis, and reflex sympathetic dystrophy among many others.

These neurons are activated both centrally and peripherally by a relatively non-selective cation channel initially identified as site of action of capsaicin, the pungent ingredient in chili peppers. That channel is now called VR1 or TRPV1 and is found in high concentration only on C and Aδ neurons. These inventors previously discovered and patented resiniferatoxin (RTX), an ultrapotent agonist of the VR1 receptor. RTX desensitizes C and Aδ-fibers when applied peripherally and may selectively ablate those neurons when applied centrally without causing substantial pain from activation of the neurons. RTX type compounds thus provide a method of controlling pain other conditions caused by C and Aδ-fiber activity. The present invention provides new RTX analogues that may have an improved therapeutic index and metabolic profile.

Dated: December 9, 2004.

Steven M. Ferguson,

Director, Division of Technology Development and Transfer, Office of Technology Transfer, National Institutes of Health.

[FR Doc. 04–27783 Filed 12–17–04; 8:45 am]

BILLING CODE 4140–01–P

DEPARTMENT OF HEALTH AND HUMAN SERVICES

National Institutes of Health

National Human Genome Research Institute; Notice of Closed Meeting

Pursuant to section 10(d) of the Federal Advisory Committee Act, as amended (5 U.S.C. Appendix 2), notice is hereby given of the following meeting.

The meeting will be closed to the public in accordance with the provisions set forth in sections 552b(c)(4) and 552b(c)(6), Title 5 U.S.C., as amended. The grant applications and the discussions could disclose confidential trade secrets or commercial property such as patentable material, and personal information concerning individuals associated with the grant applications, the disclosure of which would constitute a clearly unwarranted invasion of personal privacy.

Name of Committee: National Human Genome Research Institute Special Emphasis Panel.

Date: December 16–17, 2004.

Time: December 16, 2004, 7 p.m. to 10 p.m.

Agenda: To review and evaluate grant applications.

Place: Stanford University, Stanford Terrace Inn, 531 Stanford Avenue, Palo Alto, CA 94306.

Time: December 17, 2004, 8 a.m. to 5 p.m.

Agenda: To review and evaluate grant applications.

Place: Stanford University, Stanford Terrace Inn, 531 Stanford Avenue, Palo Alto, CA 94306.

Contact Person: Ken D. Nakamura, PHD, Scientific Review Administrator, Office of Scientific Review, National Human Genome Research Institute, National Institutes of Health, Bethesda, MD 20892, (301) 402–0838.

This notice is being published less than 15 days prior to the meeting due to the timing limitations imposed by the review and funding cycle.

(Catalogue of Federal Domstic Assistance Program Nos. 93.172, Human Genome Research, National Institutes of Health, HHS)

Dated: December 14, 2004.

Anna P. Snouffer,

Acting Director, Office of Federal Advisory Committee Policy.

[FR Doc. 04–27779 Filed 12–17–04; 8:45 am]

BILLING CODE 4140–01–M

DEPARTMENT OF HEALTH AND HUMAN SERVICES

National Institutes of Health

National Institute on Drug Abuse; Notice of Meeting

Pursuant to section 10(d) of the Federal Advisory Committee Act, as amended (5 U.S.C. Appendix 2), notice is hereby given of a meeting of the National Advisory Council on Drug Abuse.

The meeting will be open to the public as indicated below, with attendance limited to space available. Individuals who plan to attend and need special assistance, such as sign language interpretation or other reasonable accommodations, should notify the Contact Person listed below in advance of the meeting.

The meeting will be closed to the public in accordance with the provisions set forth in sections 552b(c)(4) and 552b(c)(6), Title 5 U.S.C., as amended. The grant applications and the discussions could disclose confidential trade secrets or commercial property such as patentable material, and personal information concerning individuals associated with the grant applications, the disclosure of which would constitute a clearly unwarranted invasion of personal privacy.

Name of Committee: National Advisory Council on Drug Abuse.

Date: February 15–16, 2005.

Closed: February 15, 2005, 2 p.m. to 4 p.m.

Agenda: To review and evaluate grant applications.

Place: National Institutes of Health, Neuroscience Center, 6001 Executive Boulevard, Rockville, MD 20852.

Open: February 16, 2005, 9 a.m. to 4 p.m.

Agenda: This portion of the meeting will be open to the public for announcements and reports of administrative, legislative and program developments in the drug abuse field.

Place: National Institutes of Health, Neuroscience Center, 6001 Executive Boulevard, Rockville, MD 20852.

Contact Person: Teresa Levitin, PhD, Director, Office of Extramural Affairs, National Institute on Drug Abuse, NIH, DHHS, Room 220, MSC 8401, 6101 Executive Boulevard, Bethesda, MD 20892–8401, (301) 443–2755.

Any member of the public interested in presenting oral comments to the committee may notify the Contact Person listed on this notice at least 10 days in advance of the meeting. Interested individuals and representatives of organizations may submit a letter of intent, a brief description of the organization represented, and a short description of the oral presentation. Only one representative of an organization may be allowed to present oral comments and if accepted by the committee, presentations may be limited to five minutes. Both printed and electronic copies are requested for the record. In addition, any interested person may file written comments with the committee by forwarding their statement to the Contact Person listed on this notice. The statement should include the name, address, telephone number and when applicable, the business or professional affiliation of the interested person.

Information is also available on the Institute's/Center's home page: *http://www.drugabuse.gov.NACDA/NACDAHome.html,* where an agenda and any additional information for the meeting will be posted when available.

(Catalogue of Federal Domestic Assistance Program Nos. 93.277, Drug Abuse Scientist Development Award for Clinicians, Scientist Development Awards, and Research Scientists Awards; 93.278, Drug Abuse National Research Service Awards for Research Training; 93.279, Drug Abuse Research Programs, National Institutes of Health, HHS.)

Dated: December 13, 2004.

LaVerne Y. Stringfield,

Director, Office of Federal Advisory Committee Policy.

[FR Doc. 04–27784 Filed 12–17–04; 8:45 am]

BILLING CODE 4140–01–M

DEPARTMENT OF HEALTH AND HUMAN SERVICES

National Institutes of Health

National Library of Medicine; Notice of Meeting

Pursuant to section 10(d) of the Federal Advisory Committee Act, as amended (5 U.S.C. Appendix 2), notice is hereby given of the following meeting.

The meeting will be open to the public as indicated below, with attendance limited to space available. Individuals who plan to attend and need special assistance, such as sign language interpretation or other reasonable accommodations, should notify the Contact Person listed below in advance of the meeting.

The portions of the meeting devoted to the review and evaluation of journals for potential indexing by the National Library of Medicine will be closed to the public in accordance with the provisions set forth in section 552b(c)(9)(B), Title 5 U.S.C., as amended. Premature disclosure of the titles of the journals as potential titles to be indexed by the National Library of Medicine, the discussions, and the presence of individuals associated with these publications could significantly frustrate the review and evaluation of individual journals.

Name of Committee: Literature Selection Technical Review Committee.

Date: February 10–11, 2005.

Open: February 10, 2005, 9 a.m. to 11 a.m.

Agenda: Administrative reports and program discussions.

Place: National Library of Medicine, Building 38, Board Room, 2nd Floor, 8600 Rockville Pike, Bethesda, MD 20894.

Closed: February 10, 2005, 11 a.m. to 5 p.m.

Agenda: To review and evaluate journals as potential titles to be indexed by the National Library of Medicine.

Place: National Library of Medicine, Building 38, Board Room, 2nd Floor, 8600 Rockville Pike, Bethesda, MD 20894.

Closed: February 11, 2005, 8:30 a.m. to 2 p.m.

Agenda: To review and evaluate journals as potential titles to be indexed by the National Library of Medicine.

Place: National Library of Medicine, Building 38, Board Room, 2nd Floor, 8600 Rockville Pike, Bethesda, MD 20894.

Contact Person: Sheldon Kotzin, MLS, Chief, Bibliographic Services Division, Division of Library Operations, National Library of Medicine, 8600 Rockville Pike, Bldg 38A/Room 4N419, Bethesda, MD 20894.

Any interested person may file written comments with the Committee by forwarding the statement to the Contact Person listed on this notice. The statement should include the name, address, telephone number and, when applicable, the business or professional affiliation of the interested person.

In the interest of security, NIH has instituted stringent procedures for entrance into the building by non-government employees. Persons without a government I.D. will need to show a photo I.D. and sign in at the security desk upon entering the building.

(Catalogue of Federal Domestic Assistance Program No. 93.879, Medical Library Assistance, National Institutes of Health, HHS)

Dated: December 13, 2004.

LaVerne Y. Stringfield,

Director, Office of Federal Advisory Committee Policy, NIH.

[FR Doc. 04–27785 Filed 12–17–04; 8:45 am]

BILLING CODE 4140–01–M

DEPARTMENT OF HEALTH AND HUMAN SERVICES

National Institutes of Health

Center for Scientific Review; Notice of Closed Meetings

Pursuant to section 10(d) of the Federal Advisory committee Act, as amended (5 U.S.C. Appendix 2), notice is hereby given of the following meetings.

The meetings will be closed to the public in accordance with the provisions set forth in sections 552b(c)(4) and 552b(c)(6), title 5 U.S.C., as amended. The grant applications and the discussions could disclose confidential trade secrets or commercial property such as patentable material, and personal information concerning individuals associated with the grant applications, the disclosure of which would constitute a clearly unwarranted invasion of personal privacy.

Name of Committee: Center for Scientific Review Special Emphasis Panel Neurotechnology and Brain Imaging.

Date: December 20, 2004.

Time: 2 p.m. to 4 p.m.

Agenda: To review and evaluate grant applications.

Place: National Institutes of Health, 6701 Rockledge Drive, Bethesda, MD 20892, (Telephone Conference Call).

Contact Person: Peter B. Guthrie, PhD, Scientific Review Administrator, Center for Scientific Review, National Institutes of Health, 6701 Rockledge Drive, Room 4142, MSC 7850, Bethesda, MD 20892, (301) 435–1239, *guthriep@csr.nih.gov.*

This notice is being published less than 15 days prior to the meeting due to the timing limitations imposed by the review and funding cycle.

Name of Committee: Center for Scientific Review Special Emphasis Panel Drug Use reduction.

Date: December 20, 2004.

Time: 3:30 p.m. to 4:30 p.m.

Agenda: To review and evaluate grant applications.

Place: National Institutes of Health, 6701 Rockledge Drive, Bethesda, MD 20892, (Telephone conference Call).

Contact Person: Gayle M. Boyd, PhD, Scientific Review Administrator, Center for Scientific Review, National Institutes of Health, 6701 Rockledge Drive, Room 3028–D, MSC 7759, Bethesda, MD 20892, (301) 451–9956, *gboyd@mail.nih.gov.*

This notice is being published less than 15 days prior to the meeting due to the timing

limitations imposed by the review and funding cycle.

Name of Committee: Center for Scientific Review Special Emphasis Panel Neurogenesis/Neuronal Development.

Date: December 21, 2004.

Time: 2 p.m. to 4 p.m.

Agenda: To review and evaluate grant applications.

Place: National Institutes of Health, 6701 Rockledge Drive, Bethesda, MD 20892, (Telephone Conference Call).

Contact Person: Carl D. Banner, PhD, Scientific Review Administrator, Center for Scientific Review, National Institutes of Health, 6701 Rockledge Drive, Room 4138, MSC 7850, Bethesda, MD 20892, (301) 435–1251, *bannerc@csr.nih.gov.*

This notice is being published less than 15 days prior to the meeting due to the timing limitations imposed by the review and funding cycle.

(Catalogue of Federal Domestic Assistance Program Nos. 93.306, Comparative Medicine; 93.333, Clinical Research, 93.306, 93.333, 93.337, 93.393–93.396, 93.837–93.844, 93.846–93.878, 93.892, 93.893, National Institutes of Health, HHS)

Dated: December 10, 2004.

LaVerne Y. Stringfield,

Director, Office of Federal Advisory Committee Policy.

[FR Doc. 04–27722 Filed 12–17–04; 8:45 am]

BILLING CODE 4140–01–M

DEPARTMENT OF HEALTH AND HUMAN SERVICES

National Institutes of Health

Center for Scientific Review, Notice of Closed Meetings

Pursuant to section 10(d) of the Federal Advisory Committee Act, as amended (5 U.S.C. Appendix 2), notice is hereby given of the following meetings.

The meeting will be closed to the public in accordance with the provisions set forth in sections 552b(c)(4), and 552b(c)(6), Title 5 U.S.C., as amended. The grant applications and the discussions could disclose confidential trade secrets or commercial property such as patentable material, and personal information concerning individuals associated with the grant applications, the disclosure of which would constitute a clearly unwarranted invasion of personal privacy.

Name of Committee: Center for Scientific Review Special Emphasis Panel Community-Based Colorectal Cancer Screening.

Date: December 20, 2004.

Time: 11:15 a.m. to 12:15 p.m.

Agenda: To review and evaluate grant applications.

Place: National Institutes of Health, 6701 Rockledge Drive, Bethesda, MD 20892, (Telephone Conference Call).

Contact Person: Michael Micklin, PhD, Chief, RPHB IRG, Center for Scientific Review, National Institutes of Health, 6701 Rockledge Drive, Room 3136, MSC 7759, Bethesda, MD 20892, (301) 435–1258. micklinm@csr.nih.gov.

This notice is being published less than 15 days prior to the meeting due to the timing limitations imposed by the review and funding cycle.

Name of Committee: Center for Scientific Review Special Emphasis Panel End of Life Transitions.

Date: January 3, 2005.

Time: 11 a.m. to 12 p.m.

Agenda: To review and evaluate grant applications.

Place: National Institutes of Health, 6701 Rockledge drive,Bethesda, MD 20892, (Telephone Conference Call).

Contact Person: Michael Micklin, PhD, Chief, RPHB IRG, Center for Scientific Review, National Institutes of Health, 6701 Rockledge Drive, Room 3136, MSC 7759, Bethesda, MD 20892, (301) 435–1258. micklinm@csr.nih.gov.

This notice is being published less than 15 days prior to the meeting due to the timing limitations imposed by the review and funding cycle.

(Catalogue of Federal Domestic Assistance Program Nos. 93.306, Comparative Medicine; 93.333, Clinical Research, 93.306, 93.333, 93.337, 93.393–93.396, 93.837–93.844, 93.846–93.878, 93.892, 93.893, National Institutes of Health, HHS.)

Dated: December 14, 2004.

LaVerne Y. Stringfield,

Director, Office of Federal Advisory Committee Policy.

[FR Doc. 04–27778 Filed 12–17–04; 8:45 am]

BILLING CODE 4140–01–M

DEPARTMENT OF HEALTH AND HUMAN SERVICES

National Institutes of Health

Prospective Grant of Exclusive License: 4′ and 4′,4″-substituted-3-α-(diphenylmethoxy) Tropane Analogs as Cocaine Therapeutics

AGENCY: National Institutes of Health, Public Health Service, DHHS.

ACTION: Notice.

SUMMARY: This is notice, in accordance with 35 U.S.C. 209(c)(1) and 37 CFR 404.7(a)(1)(i), that the National Institutes of Health (NIH), Department of Health and Human Services, is contemplating the grant of an exclusive license worldwide to practice the invention embodied in of U.S. Patent 5,792,775, issued on August 11, 1998, entitled, ''4′ and 4′,4″-substituted-3-α-(diphenylmethoxy) tropane analogs as cocaine therapeutics' to Phase2 Discovery, having a place of business in the state of Ohio. The field of use may be limited to the treatment of Attention Deficit Hyperactivity Disorder (ADHD). The United States of America is the assignee of the patent rights in this invention. This announcement is the first notice to grant an exclusive license to this technology.

DATES: Only written comments and/or application for a license which are received by the NIH Office of Technology Transfer on or before February 18, 2005, will be considered.

ADDRESSES: Requests for a copy of the patent applications, inquiries, comments and other materials relating to the contemplated license should be directed to: Pradeep Ghosh, J.D., Ph.D., M.B.A., Technology Licensing Specialist, Office of Technology Transfer, National Institutes of Health, 6011 Executive Boulevard, Suite 325, Rockville, MD 20852–3804; Telephone: (301) 435–5282; Facsimile: (301) 402–0220; e-mail: *ghoshpr@mail.nih.gov.*

SUPPLEMENTARY INFORMATION: This technology relates to a family of tropane analogs that bind to dopamine transporters and can be used to image dopamine transporter binding sites, and to diagnose and/or monitor neurodegenerative disorders and developmental disabilities like ADHD. ADHD is a neurobiological-based developmental disability characterized by inattentiveness, impulsivity, and hyperactivity.

The prospective exclusive license will be royalty-bearing and will comply with the terms and conditions of 35 U.S.C. 209 and 37 CFR 404.7. The prospective exclusive license may be granted unless, within 60 days from the date of this published Notice, NIH receives written evidence and argument that establishes that the grant of the license would not be consistent with the requirements of 35 U.S.C. 209 and 37 CFR 404.7.

Properly filed competing applications for a license filed in response to this notice will be treated as objections to the contemplated license. Comments and objections submitted in response to this notice will not be made available for public inspection, and, to the extent permitted by law, will not be released under the Freedom of Information Act, 5 U.S.C. 552.

Dated: December 13, 2004.

Steven M. Ferguson,

Director, Division of Technology Development and Transfer, Office of Technology Transfer, National Institutes of Health.

[FR Doc. 04–27781 Filed 12–17–04; 8:45 am]

BILLING CODE 4140–01–P

DEPARTMENT OF HEALTH AND HUMAN SERVICES

Substance Abuse and Mental Health Services Administration

Notice of Extension of Receipt Dates for SAMHSA Funding Opportunities—TI 05–006, State Adolescent Substance Abuse Treatment Coordination, and TI 05–003, Grants to Expand Substance Abuse Treatment Capacity in Targeted Areas of Need

SUMMARY: Notices of Funding Availability (NOFAs), TI 05–006, State Adolescent Substance Abuse Treatment Coordination (Short Title: Adolescent Treatment Coordination), and TI 05–003, Grants to Expand Substance Abuse Treatment Capacity in Targeted Areas of Need (Short Title: TCE), were announced by the Substance Abuse and Mental Health Services Administration (SAMHSA) Center for Substance Abuse Treatment (CSAT) in the **Federal Register** on November 12, 2004 (Vol. 69, No. 218; pages 65437–65445).

The receipt date for applications listed for TI 05–006, State Adolescent Substance Abuse Treatment Coordination was January 12, 2005. This program is designed to facilitate State-level coordination of adolescent substance abuse treatment services. Because of the extensive coordination required to prepare an application, SAMHSA has extended the application receipt date until February 2, 2005.

The receipt date for applications listed for TI 05–003, Grants to Expand Substance Abuse Treatment Capacity in Targeted Areas of Need (TCE), was January 13, 2005. This program is designed to expand and/or enhance a community's ability to provide a comprehensive, integrated, and community-based response to a targeted, well-documented substance abuse treatment capacity problem and/or improve the quality and intensity of services. Because the populations targeted are different than in past TCE initiatives, SAMHSA has extended the application receipt date until January 26, 2005.

For further information about the State Adolescent Substance Abuse Treatment Coordination program, please contact: Randolph D. Muck, SAMHSA/CSAT, 1 Choke Cherry Road, Room 5–1083, Rockville, MD 20857; phone 240–276–1576; E-mail: *randy.muck@samhsa.hhs.gov*.

For further information about the Grants To Expand Substance Abuse Treatment Capacity in Targeted Areas of Need (TCE) program, please contact: Kenneth Robertson, SAMHSA/CSAT, 1 Choke Cherry Road, Room 5–1001, Rockville, MD 20857; phone (240) 276–1621; E-mail: *kenneth.robertson@samhsa.hhs.gov.*

Dated: December 13, 2004.

Daryl Kade,

Director, Office of Policy, Planning and Budget, Substance Abuse and Mental Health Services Administration.

[FR Doc. 04–27808 Filed 12–17–04; 8:45 am]

BILLING CODE 4162–20–P

DEPARTMENT OF HOMELAND SECURITY

Federal Emergency Management Agency

U.S. Fire Administration Emergency Management Institute Board of Visitors

AGENCY: Federal Emergency Management Agency, Emergency Preparedness and Response Directorate, Department of Homeland Security.

ACTION: Committee management: Notice of committee re-establishment.

SUMMARY: The Secretary of the Department of Homeland Security has determined that the re-establishment of the U.S. Fire Administration Board of Visitors for the Emergency Management Institute is necessary and in the public interest in connection with the performance of the duties of the Under Secretary of the Emergency Preparedness and Response Directorate. This determination follows consultation with the Committee Management Secretariat, General Services Administration.

Name of Committee: Board of Visitors for the Emergency Management Institute.

Purpose and Objectives: The board shall review the programs of the Emergency Management Institute (EMI) and make comments and recommendations to the Administrator, United States Fire Administration (USFA), as delegated by the Under Secretary, Emergency Preparedness and Response (EP&R), regarding the operations of the Institute and any improvements therein which the Board deems appropriate.

In carrying out their responsibilities, the Board may include in their review a discussion of the Institute's programs to determine whether these programs further the basic mission of EMI and other appropriate subject areas that are related to the effectiveness of the delivery of the Institute's programs.

The Board shall draw on the expertise of its members and, with the approval of the Superintendent, EMI, such other experts as may be considered appropriate in order to provide advice and make recommendations to the Superintendent.

The Board shall function solely as an advisory board and comply fully with the provisions of the Federal Advisory Committee Act (Public Law 92–463).

Balanced Membership Plans: The Board of Visitors will be comprised of nine members, including a chairperson. The Secretary shall appoint the members of the Board from the nominations of qualified persons submitted by the Superintendent, EMI. The members of the Board shall be selected from among professionals in the fields of emergency management, education, public administration, industry, and from such professional organizations as will ensure a balanced representation of interest.

Duration: The Board shall function on continuing basis in accordance with the statute unless terminated through appropriate action by the proper authority.

Responsible DHS Official: Mr. R. David Paulison, U.S. Fire Administrator, 16825 South Seton Avenue, Emmitsburg, MD 21727.

Contact for Information: Loretta Arscott, National Emergency Training Center, Emergency Management Institute, 16825 South Seton Avenue, Emmitsburg, MD 21727, 301–447–1286.

Dated: December 14, 2004.

Michael D. Brown,

Under Secretary, Emergency Preparedness and Response, Department of Homeland Security.

[FR Doc. 04–27753 Filed 12–17–04; 8:45 am]

BILLING CODE 9110–17–P

DEPARTMENT OF HOMELAND SECURITY

Citizenship and Immigration Services

[CIS No. 2321–04; Docket No. DHS–2004–0024]

RIN 1615–ZA06

Expansion of the Basic Pilot Program to All 50 States and the District of Columbia; Providing Web-Based Access

AGENCY: U.S. Citizenship and Immigration Services, Department of Homeland Security.

ACTION: Notice.

SUMMARY: U.S. Citizenship and Immigration Services (USCIS) currently operates a pilot program (the Basic Pilot Program) which allows employers to get automated confirmation of a newly

hired employee's work authorization after an Employment Eligibility Verification form (Form I–9) has been completed. This pilot program is offered to employers in six states. USCIS has been directed by Congress to expand it to all 50 states and the District of Columbia by December 1, 2004. This notice announces the expansion of the Basic Pilot Program to all 50 states. This notice also announces that the USCIS is offering Web-Based Access for the Basic Pilot Program to all employers volunteering to participate in the Basic Pilot Program.

DATES: The expansion of the Basic Pilot Program to all 50 States and the District of Columbia is effective December 1, 2004. The Web-Based Access method became available to current and new users beginning July 6, 2004.

FOR FURTHER INFORMATION CONTACT: Phyllis A. Lancaster, Assistant Director, SAVE Program, U.S. Citizenship and Immigration Services, Department of Homeland Security, 20 Massachusetts Avenue, NW, ULLICO Building, 4th Floor, Washington, DC 20529, Telephone (202) 514–2317.

SUPPLEMENTARY INFORMATION:

What Are the Automated Employment Eligibility Confirmation Pilot Programs?

Section 401 of the Illegal Immigration Reform and Immigrant Responsibility Act of 1996 (IIRIRA), Public Law 104–208 (Sept. 30, 1996), established three pilot programs for employment eligibility confirmation: the Basic Pilot Program; the Citizen Attestation Pilot Program; and the Machine-Readable Document Pilot Program. Section 401(b) of IIRIRA provided that the pilot programs were to be conducted for 4 years. Pursuant to IIRIRA, the Basic Pilot Program was to be made available to all employers in, at a minimum, five of the seven states with the highest estimated population of aliens unlawfully present in the United States. On September 15, 1997, the former Immigration and Naturalization Service (Service) published a notice in the **Federal Register**, at 62 FR 48309, announcing these states to be the States of California, Florida, Illinois, New York, and Texas (in March 1999, the former Service published a notice in the **Federal Register**, at 64 FR 13606, adding Nebraska to the list). The notice also described the procedures for all of the pilot programs and how employers could elect to participate in them.

In 2001, section 2 of the Basic Pilot Extension Act of 2001, Public Law 107–129 (Jan. 16, 2002), extended the pilot programs until November 30, 2003. More recently, section 2 of the Basic Pilot Program Extension and Expansion Act of 2003, Public Law 108–156 (December 3, 2003), extended the pilot programs for another five years. Under this amendment, the pilot programs are set to terminate on November 30, 2008.

The Service and Systematic Alien Verification for Entitlements (SAVE) Program, administered the pilots in conjunction with the Social Security Administration (SSA). On March 1, 2003, the Service transferred from the Department of Justice to DHS pursuant to the Homeland Security Act of 2002, Pub. L. 107–296, 116 Stat. 2142 (Nov. 26, 2002). USCIS administers the Basic Pilot Program for DHS. Of the three pilot programs, only the Basic Pilot Program remains operational.

All employers must ensure proper completion of the Employment Eligibility Verification form (Form I–9) for each newly hired employee, including U.S. citizens and aliens. Employers who sign up to participate in the Basic Pilot Program complete the Form I–9 verification process as usual, but then enter and submit Form I–9 information through a web-based computer program to the SSA database. If SSA does not have sufficient information to confirm work authorization status, queries are instantaneously sent to USCIS for confirmation.

In most cases, confirmation or nonconfirmation of work authorization is provided within seconds. If more information is required to complete the confirmation process, the employer is asked to have the employee contact SSA or USCIS to provide the needed information. This is the only way an employer can get confirmation from DHS regarding their employees' work authorization. Employers who do not use the Basic Pilot Program continue to use the Form I–9 process alone. The purpose of the Basic Pilot Program is to test this method of providing an effective, nondiscriminatory work eligibility verification procedure focusing on electronic verification.

With a couple of exceptions, an employer's participation in the Basic Pilot Program is voluntary and free to participating employers. The first exception applies to certain federal government entities. Each Department of the federal government must elect to participate in a pilot program (one of the three), but may limit it to the states covered by the program and to certain divisions within the department. Each member of Congress, each officer of Congress, and the head of each agency of the legislative branch that conducts hiring in a state in which a pilot program is operating must elect to participate in a pilot program of his or her choosing. The second exception applies to certain employers who have been found to have knowingly employed unauthorized aliens or engaged in unfair immigration-related employment practices. Such employers may be required to participate in a pilot program with respect to the employer's hiring (or recruitment or referral) of individuals in a state covered by the program pursuant to an order issued under section 274A(e)(4) or section 274B(g) of the Immigration and Nationality Act (INA).

How Is the Basic Pilot Program Being Expanded?

In addition to extending the pilot programs, section 3 of Public Law 108–156 directs the Secretary of Homeland Security to expand the Basic Pilot Program to all 50 States and the District of Columbia no later than December 1, 2004. Before implementing this expansion, Public Law 108–156 requires that USCIS prepare a report to Congress addressing the extent to which problems identified in the pilot evaluation reports were resolved and actions that would be taken to resolve any outstanding problems. The report was submitted to Congress on July 22, 2004, and is available to the public in USCIS'' Web site at *http://uscis.gov/graphics/aboutus/repsstudies/piloteval/BasicFINAL0704.pdf.*

Pursuant to Public Law 108–156, USCIS announces through this Notice that it will expand the Basic Pilot Program to employers in all 50 States and the District of Columbia beginning December 1, 2004.

What Access Method Is Available to Participating Employers?

This Notice also announces that the Basic Pilot Program Web-Based Access is now available to all new users. USCIS launched this new access method on July 6, 2004. Prior to this, participation in the Basic Pilot Program required employers to access the Alien Status Verification Index (ASVI) database, by using a dial-up access method to obtain employment authorization.

During March 2004, the Verification Information System (VIS) replaced the ASVI database, allowing USCIS to provide employers with a new Web-Based Access Method. Unlike the Basic Pilot Program dial-up method, which required installation of software and a modem, the new Internet version of the program allows users to access the Basic Pilot Program from any personal computer that has Internet access. Other features of the Internet version of the Basic Pilot Program include on-line

registration, reporting capability for users, and availability of the system seven days a week, 19-hours a day (the system is shut down from 12 a.m. to 5 a.m. for maintenance and updating of data). In addition, employers will have quick and easy access to on-line resources such as the Basic Pilot Program User Manual, the Basic Pilot Program Tutorial, Handbook for Employers (M–274), Identity Document Guide (M–396), and links to various sources containing information relating to employment issues.

Current dial-up Basic Pilot users switching to the Web-Based Access Method will be required to re-register on-line at *https://www.vis-dhs.com/employerregistration,* because of new features associated with the Web version, e.g., each employer site must now have a program administrator and employer sites can generate user reports. Prior to gaining access to the Web Basic Pilot Program, employers are required to complete the Web tutorial to become familiar with the new processes, and to review policies and procedures of the Basic Pilot Program.

At this time, USCIS will continue to support employers accessing the Basic Pilot dial-up method; however, new Basic Pilot participants will be directed to use only the Web-Based Access Method.

How Can Employers Elect To Participate in the Basic Pilot Program?

In order to participate, employers must enter into a Memorandum of Understanding (MOU) with USCIS and SSA. To register for the Basic Pilot Program, employers can log on to *https://www.vis-dhs.com/employerregistration,* which provides instructions for completing the MOU and registering for the program. Employers who are currently using the Basic Pilot Program dial-up method must re-register on-line to take advantage of the Web-Based Access method.

How Are the Privacy of Records Safeguarded?

USCIS' VIS certification and accreditation adheres to the security requirements of the Bureau of Immigration and Customs Enforcement (ICE), USCIS and DHS. VIS ensures that appropriate safeguards are implemented to minimize the risk to data and systems from data integrity threats. This is critical to national security and to other government entities that rely on the information contained in DHS databases. Data integrity refers to the validity of the information from the beginning to the end of a transaction, including the consistency, accuracy, and correctness of data stored in the databases.

VIS employs mechanisms to protect system data and implements data integrity and validation controls. Data integrity controls are in place to protect data from accidental or malicious alteration or destruction, and provide assurance to the user that the information meets the expectation about its quality and that it has not been altered. Validation controls are in place to test and evaluate compliance with security specifications and requirements.

How Can Employers Contact USCIS To Obtain Additional Information?

Employers may request additional information about the Basic Pilot Program by writing to the U.S. Citizenship and Immigration Services, 20 Massachusetts Avenue, NW., ULLICO Building, 4th Floor, Washington, DC 20529, Attention: SAVE Program. Employers may also fax a request for information to the SAVE Program at (202) 514–9981, or call the SAVE Program toll free at 888–464–4218.

Paperwork Reduction Act

The information collection requirement contained in the MOU (including registration) has been previously approved for use by the Office of Management and Budget (OMB). The OMB control number for this collection is 1653–0033 (previously 1115–0228). Since USCIS is expanding the Basic Pilot Program to all 50 States and the District of Columbia, the number of respondents will increase. Accordingly, USCIS has submitted the required Paperwork Reduction Change Worksheet (OMB–83C) to OMB reflecting the new burden hours, and the OMB has approved the changes. USCIS will also be amending the MOU to reflect the new organization structure from the former Immigration and Naturalization Service to USCIS.

Dated: December 14, 2004.

William R. Yates,

Associate Director of Operations, U.S. Citizenship and Immigration Services.

[FR Doc. 04–27702 Filed 12–16–04; 9:27 am]

BILLING CODE 4410–10–P

DEPARTMENT OF HOUSING AND URBAN DEVELOPMENT

[Docket No. FR–4903–N–102]

Notice of Submission of Proposed Information Collection to OMB; Periodic Estimate for Partial Payment and Related Schedules

AGENCY: Office of the Chief Information Officer, HUD.

ACTION: Notice.

SUMMARY: The proposed information collection requirement described below has been submitted to the Office of Management and Budget (OMB) for review, as required by the Paperwork Reduction Act. The Department is soliciting public comments on the subject proposal.

HUD is requesting approval to reinstate the information collection requiring Housing Agencies (HAs) to collect certain information for contract administration during project development.

DATES: *Comments Due Date:* January 19, 2005.

ADDRESSES: Interested persons are invited to submit comments regarding this proposal. Comments should refer to the proposal by name and/or OMB approval Number (2577–0025) and should be sent to: HUD Desk Officer, Office of Management and Budget, New Executive Office Building, Washington, DC 20503; fax: 202–395–6974.

FOR FURTHER INFORMATION CONTACT: Wayne Eddins, Reports Management Officer, AYO, Department of Housing and Urban Development, 451 Seventh Street, SW., Washington, DC 20410; e-mail *Wayne_Eddins@HUD.gov;* or Lillian Deitzer at *Lillian_L_Deitzer@HUD.gov* or telephone (202) 708–2374. This is not a toll-free number. Copies of available documents submitted to OMB may be obtained from Mr. Eddins or Ms. Deitzer and at HUD's Web site at *http://www5.hud.gov:63001/po/i/icbts/collectionsearch.cfm*

SUPPLEMENTARY INFORMATION: This notice informs the public that the Department of Housing and Urban Development has submitted to OMB a request for approval of the information collection described below. This notice is soliciting comments from members of the public and affecting agencies concerning the proposed collection of information to: (1) Evaluate whether the proposed collection of information is necessary for the proper performance of the functions of the agency, including whether the information will have

practical utility; (2) evaluate the accuracy of the agency's estimate of the burden of the proposed collection of information; (3) enhance the quality, utility, and clarity of the information to be collected; and (4) minimize the burden of the collection of information on those who are to respond; including through the use of appropriate automated collection techniques or other forms of information technology, *e.g.*, permitting electronic submission of responses.

This notice also lists the following information:

Title of Proposal: Periodic Estimate for Partial Payment and Related Schedules.

OMB Approval Number: 2577–0025.

Form Numbers: HUD–51001, HUD–51002, HUD–51003, HUD–51004.

Description of the Need for the Information and Its Proposed Use: Housing Agencies (HAs) are responsible for contract administration during project development and must ensure project development is completed in accordance with state laws and HUD requirements.

Contractor/Subcontractor reports provide summaries of payments, change orders, and schedules of materials stored for the project.

	Number of respondents	Annual responses	×	Hours per response	=	Burden hours
Reporting Burden	3,527	14,075		3.6		51,124

Total Estimated Burden Hours: 51,124.

Status: Reinstatement of a previously approved collection.

Authority: Section 3507 of the Paperwork Reduction Act of 1995, 44 U.S.C. 35, as amended.

Dated: December 13, 2004.

Wayne Eddins,

Departmental Paperwork Reduction Act Officer, Office of the Chief Information Officer.

[FR Doc. E4–3727 Filed 12–17–04; 8:45 am]

BILLING CODE 4210–72–P

DEPARTMENT OF HOUSING AND URBAN DEVELOPMENT

[Docket No. FR–4903-N–101]

Notice of Submission of Proposed Information Collection to OMB; Mortgagee's Certification of Fees and Escrow

AGENCY: Office of the Chief Information Officer, HUD.

ACTION: Notice.

SUMMARY: The proposed information collection requirement described below has been submitted to the Office of Management and Budget (OMB) for review, as required by the Paperwork Reduction Act. The Department is soliciting public comments on the subject proposal.

HUD is requesting approval to continue to collect the information provided by mortgagees to ensure that fees are within acceptable limits and the required escrows will be collected. HUD determines the reasonableness of the fees and uses the information in calculating the financial requirement for closing.

DATES: *Comments Due Date:* January 19, 2005.

ADDRESSES: Interested persons are invited to submit comments regarding this proposal. Comments should refer to the proposal by name and/or OMB approval Number (2502–0468) and should be sent to: HUD Desk Officer, Office of Management and Budget, New Executive Office Building, Washington, DC 20503; fax: 202–395–6974.

FOR FURTHER INFORMATION CONTACT: Wayne Eddins, Reports Management Officer, AYO, Department of Housing and Urban Development, 451 Seventh Street, SW., Washington, DC 20410; e-mail *Wayne_Eddins@HUD.gov;* or Lillian Deitzer at *Lillian_L_Deitzer@HUD.gov* or telephone (202) 708–2374. This is not a toll-free number. Copies of available documents submitted to OMB may be obtained from Mr. Eddins or Ms Deitzer and at HUD's Web site at *http://www5.hud.gov:63001/po/i/icbts/collectionsearch.cfm*

SUPPLEMENTARY INFORMATION: This notice informs the public that the Department of Housing and Urban Development has submitted to OMB a request for approval of the information collection described below. This notice is soliciting comments from members of the public and affecting agencies concerning the proposed collection of information to: (1) Evaluate whether the proposed collection of information is necessary for the proper performance of the functions of the agency, including whether the information will have practical utility; (2) evaluate the accuracy of the agency's estimate of the burden of the proposed collection of information; (3) enhance the quality, utility, and clarity of the information to be collected; and (4) minimize the burden of the collection of information on those who are to respond; including through the use of appropriate automated collection techniques or other forms of information technology, *e.g.*, permitting electronic submission of responses.

This notice also lists the following information:

Title of Proposal: Mortgagee's Certification of Fees and Escrow.

OMB Approval Number: 2502–0468.

Form Numbers: 2434.

Description of the Need for the Information and Its Proposed Use: Mortgagees provide this information to ensure that fees are within acceptable limits and the required escrows will be collected. HUD determines the reasonableness of the fees and uses the information in calculating the financial requirement for closing.

Frequency of Submission: On occasion.

	Number of respondents	Annual responses	×	Hours per response	=	Burden hours
Reporting Burden:	1,100	1,100		0.75		825

Total Estimated Burden Hours: 825.

Status: Extension of a currently approved collection.

Authority: Section 3507 of the Paperwork Reduction Act of 1995, 44 U.S.C. 35, as amended.

Dated: December 13, 2004.

Wayne Eddins,

Departmental Paperwork Reduction Act Officer, Office of the Chief Information Officer.

[FR Doc. E4–3728 Filed 12–17–04; 8:45 am]

BILLING CODE 4210–72–P

DEPARTMENT OF HOUSING AND URBAN DEVELOPMENT

[Docket No. FR–4900-FA–26]

Announcement of Funding Awards for Fiscal Year 2004 Community Outreach Partnership Centers

AGENCY: Office of the Assistant Secretary for Policy Development and Research, HUD.

ACTION: Announcement of funding awards.

SUMMARY: This document identifies the institutions selected for funding under the Fiscal Year 2004 Community Outreach Partnerships Centers (COPC) Program. The COPC program provides funds to two- and four-year colleges and universities to establish and operate Community Outreach Partnership Centers that will: (1) Conduct competent and qualified research and investigation on theoretical or practical problems in large and small cities; and (2) facilitate partnerships and outreach activities among institutions of higher education, local communities, and local governments to address urban problems.

FOR FURTHER INFORMATION CONTACT: Susan Brunson, Office of University Partnerships, Department of Housing and Urban Development, Room 8106, 451 Seventh Street, SW., Washington, DC 20410–6000, telephone (202) 708–3061, ext. 3852. To provide service for persons who are hearing- or speech-impaired, this number may be reached through TTY by dialing the Federal Information Relay Service on 800–877–8339 or 202–708–1455. (Telephone number, other than ''800'' TTY numbers are not toll free).

SUPPLEMENTARY INFORMATION: The Community Outreach Partnership Centers Program was enacted in the Housing and Community Development Act of 1992 (Pub. L. 102–550, approved October 28, 1992) and is administered by the Associate Deputy Assistant Secretary for University Partnerships. In addition to the COPC program, the Office of University Partnerships administers HUD's ongoing grant programs to institutions of higher education as well as creates initiatives through which colleges and universities can bring their traditional missions of teaching, research, service, and outreach to bear on the pressing local problems in their communities.

The Community Outreach Partnership Centers Program provides funds for: Research activities that have practical application for solving specific problems in designated communities and neighborhoods, and outreach, technical assistance and information exchange activities that are designed to address specific problems associated with housing, economic development, neighborhood revitalization, infrastructure, health care, job training, education, crime prevention, planning, and neighborhood capacity building.

The Catalog Federal Domestic Assistance number for this program is 14.511.

On May 14, 2004 (69 FR 27097), HUD published a Notice of Funding Availability (NOFA) announcing the availability of $6.9 million. The Department reviewed, evaluated, and scored the applications received based on the criteria in the NOFA. As a result, HUD has funded 14 applications for New Grants and 7 applications for New Directions Grants. New Grants, which cannot exceed $400,000, are for institutions of higher education just beginning a COPC project. New Directions Grants, which cannot exceed $200,000, are for institutions of higher education that received an earlier COPC grant and are undertaking new activities or expanding into new neighborhoods. These grants, with their grant amounts, are identified below.

In accordance with Section 102(a)(4)(C) of the Department of Housing and Urban Development Reform Act of 1989 (Pub. L. 101–235, approved December 15, 1989), the Department is publishing details concerning the recipients of funding awards, as follows:

List of Awardees for Grant Assistance Under the FY 2004 Community Outreach Partnerhship Centers (COPC) Communities Program Funding Competition, by Institution, Address and Grant Amount

Region I

1. University of Massachusetts, Mr. Stephen Demski, C/O Office of Grant & Contract Administration, Amherst, MA 01003. Grant: $398,573.

Region III

2. University of Pittsburgh, Mr. Tracy Soska, 350 Thackeray, Pittsburgh, PA 15260. Grant: $200,000.
3. University of Maryland-Baltimore, Ms. Dawn Wilkins, 515 West Lombard Street, 5th Floor, Baltimore, MD 21201. Grant: $199,710.
4. The Pennsylvania State University, Mr. Daniel Jay Lago, 110 Technology Center Building, University Park, PA 16802. Grant: $287,191.
5. Edinboro University of Pennsylvania, Ms. Linda Lacny, 219 Meadville Street, Edinboro, PA 16444. Grant: $311,392.

Region IV

6. University of Tennessee at Chattanooga, Ms. Diane Roper Miller, 615 McCallie Avenue, Department 4905, Chattanooga, TN 37403. Grant: $149,811.
7. Florida Community College at Jacksonville, Dr. Kathryn Birmingham, 501 West State Street, Jacksonville, FL 32202. Grant: $392,615.
8. University of Puerto Rico, Dr. Consuelo Figueras, Box 21489, San Juan, PR 00931–1489. Grant: $399,997.
9. Rhodes College, Mr. Charles N. Landreth, Jr., 2000 North Parkway, Memphis, TN 38112. Grant: $399,978.
10. Emory University, Dr. Michael James Rich, Office of Sponsored Programs, 1784 North Decatur Road, Suite 510, Atlanta, GA 30322. Grant: $400,000.

Region V

11. The Board of Trustee of the University of Illinois, Mr. Atanacio Gonzalez, 809 South Marshfield Avenue, MB 502, (M/C 551), Chicago, IL 60612. Grant: $200,000.
12. Medical College of Wisconsin, Dr. Barbara Beck, 8701 Watertown Plank Road, Milwaukee, WI 53226. Grant: $199,970.
13. The University of Akron, Mr. Kenneth Charles Stapleton, 302 East Buchtel Avenue, Akron, OH 44325. Grant: $400,000.
14. Regents of the University of Minnesota, Mr. Tom McRoberts, University of Minnesota-Morris, Grants Development Office, 235 Community Service Building, Morris, MN 56267. Grant: $399,494.
15. Mott Community College, Ms. Judith Cawhorn, 1401 East Court Street, Flint, MI 48503. Grant: $398,936.
16. Xavier University, Mr. Byron White, 3800 Victory Parkway, ML 5621, Cincinnati, OH 45207. Grant: $392,754.

Region VI

17. Southern University at Shreveport, Ms. Janice Brown Sneed,

3050 Martin Luther King, Jr. Drive, Shreveport, LA 71107. Grant: $391,490.

Region VII

18. University of Kansas Center for Research, Ms. Rona Chamberlain, 2385 Irving Hill Road, Lawrence, KS 66045. Grant: $400,000.

Region VIII

19. University of Utah, Mr. William Ernest, 1471 Federal Way, Salt Lake City, UT 84102. Grant: $399,702.

Region IX

20. Los Angeles Trade Technical College, Dr. Denise G. Fairchild, 400 West Washington Blvd., Los Angeles, CA 90015. Grant: $200,000.

21. The Regents of the University of California, Ms. Patricia Gates, 336 Sproul Hall, Berkeley, CA 94720. Grant: $200,000.

Dated: December 3, 2004.

Dennis C. Shea,

Assistant Secretary for Policy Development & Research.

[FR Doc. E4–3725 Filed 12–17–04; 8:45 am]

BILLING CODE 4210–62–P

DEPARTMENT OF HOUSING AND URBAN DEVELOPMENT

[Docket No. FR–4900–FA–02]

Announcement of Funding Awards for Fiscal Year 2004 Early Doctoral Student Research Grant Program

AGENCY: Office of the Assistant Secretary for Policy Development and Research, HUD.

ACTION: Announcement of funding awards.

SUMMARY: This document identifies the doctoral students selected for funding under the Fiscal Year (FY) 2004 Early Doctoral Student Research Grant (EDSRG) Program. The EDSRG program enables doctoral students to cultivate their research skills through the preparation of research manuscripts that focus on policy-relevant housing and urban development issues.

FOR FURTHER INFORMATION CONTACT: Susan Brunson, Office of University Partnerships, Department of Housing and Urban Development, Room 8106, 451 Seventh Street, SW., Washington, DC 20410–6000, telephone (202) 708–3061, ext. 3852. To provide service for persons who are hearing-or speech-impaired, this number may be reached through TTY by dialing the Federal Information Relay Service on 800–877–8339 or 202–708–1455. (Telephone numbers, other than ''800'' TTY numbers are not toll free).

SUPPLEMENTARY INFORMATION: The EDSRG enables students to cultivate their research skills through the preparation of research manuscripts that focus on policy-relevant housing and urban development issues. Doctoral students have 12 months to complete a major research study. The maximum amount to be awarded is $15,000.

This program is administered by the Associate Deputy Assistant Secretary for University Partnerships. This Office also administers Policy Development and Research's other grant programs for academics.

The Catalog of Federal Domestic Assistance number for this program is 14.517.

On May 14, 2004 (69 FR 27111), HUD published a Notice of Funding Availability (NOFA) announcing the availability of $150,000 in FY 2004 funds for the EDSRG Program. The Department reviewed, evaluated and scored the applications received based on the criteria in the NOFA. As a result, HUD has funded the applicants identified below, and in accordance with Section 102(a)(4)(C) of the Department of Housing and Urban Development Reform Act of 1989 (103 Stat. 1987, U.S.C. 3545), the Department is publishing details concerning the recipients of funding awards. More information about the winners can be found at *http://www.oup.org*.

List of Awardees for Grant Assistance Under the FY 2004 Early Doctoral Student Research Grant Program Funding Competition, by Institution, Address, Grant Amount and Name of Student Funded

1. University of Pittsburgh, Graduate School of Public and International Affairs, 350 Thackeray Hall, Pittsburgh, PA 15260. Grant: $14,900 to Flexi Au Yeung.

2. Kansas State University, Department of Economics, 2 Fairchild Hall, Manhattan, KS 66506. Grant: $15,000 to Heather Luea.

3. University of Texas at Arlington, School of Urban and Public Affairs, Box 19588, 601 South Nedderman Drive, Arlington, TX 76019. Grant: $14,200 to Marlene O' Meara.

4. The Regents of the University of California, Political Science Department, 2000 University Office Building, Riverside, CA 92521. Grant: $15,000 to Jeffery McLaughlin.

5. The Regents of the University of California, UCLA–Department of Sociology, 10920 Wilshire Blvd., Suite 1200, Los Angeles, CA 90024. Grant: $15,000 to Andrew Deener.

6. Georgia Institute of Technology, 275 5th Street, 1st Floor, Atlanta, GA 30332. Grant: $15,000 to Valerie Riecke.

7. Virginia Polytechnic Institute & State University, 460 Turner Street, Suite 306, Blacksburg, VA 24060. Grant: $15,000 to Karen Danielsen-Lang.

8. The Regents of the University of California, UCLA–Department of Sociology, 10920 Wilshire Blvd., Suite 1200, Los Angeles, CA 90024. Grant: $15,000 to R. Varisa Patraporn.

Dated: December 3, 2004.

Dennis C. Shea,

Assistant Secretary for Policy Development & Research.

[FR Doc. E4–3730 Filed 12–17–04; 8:45 am]

BILLING CODE 4210–62–P

DEPARTMENT OF THE INTERIOR

Fish and Wildlife Service

Recovery Plan for Five Plants From Monterey County, CA

AGENCY: U.S. Fish and Wildlife Service, Interior.

ACTION: Notice of document availability.

SUMMARY: The U.S. Fish and Wildlife Service (''we'') announces the availability of the final Recovery Plan for Five Plants from Monterey County, California. This recovery plan includes the following species: *Astragalus tener* var. *titi* (coastal dunes milk-vetch), *Piperia yadonii* (Yadon's piperia), *Potentilla hickmanii* (Hickman's potentilla), *Trifolium trichocalyx* (Monterey clover), and *Cupressus goveniana* ssp. *goveniana* (Gowen cypress). *Astragalus tener* var. *titi*, *Piperia yadonii, Potentilla hickmanii,* and *Trifolium trichocalyx* are listed as endangered. *Cupressus goveniana* ssp. *goveniana* is listed as a threatened species. These plant species are found primarily along the coast of northern Monterey County, California. *Potentilla hickmanii* also occurs in San Mateo County and has occurred historically in Sonoma County. *Astragalus tener* var. *titi* has occurred historically in Los Angeles and San Diego Counties, California. This recovery plan includes specific criteria and actions to be taken in order to effectively recover the species.

ADDRESSES: Copies of this recovery plan are available by request from the U.S. Fish and Wildlife Service, Ventura Fish and Wildlife Office, 2493 Portola Road, Suite B, Ventura, California 93003 (telephone: 805/644–1766). An electronic copy of the recovery plan is also available at: *http://*

www.endangered.fws.gov/recovery/index.html#plans.

FOR FURTHER INFORMATION CONTACT: Diane Steeck, Fish and Wildlife Biologist, at the above Ventura address.

SUPPLEMENTARY INFORMATION:

Background

Restoring endangered or threatened animals and plants to the point where they are again secure, self-sustaining members of their ecosystems is a primary goal of our endangered species program. The Endangered Species Act, as amended (16 U.S.C. 1531 *et seq.*) (Act), requires the development of recovery plans for listed species unless such a plan would not promote the conservation of a particular species. Recovery plans help guide the recovery effort by describing actions considered necessary for the conservation of the species, establishing criteria for the recovery levels for downlisting or delisting them, and estimating time and cost for implementing the recovery measures needed.

Section 4(f) of the Act requires that public notice and an opportunity for public review and comment be provided during recovery plan development. In fulfillment of this requirement, the Draft Recovery Plan for Five Plants from Monterey County, California, was available for public comment from May 13, 2002, through July 12, 2002 (67 FR 32003). Information presented during the public comment period has been considered in the preparation of this final recovery plan, and is summarized in the appendix to the recovery plan. We will forward substantive comments regarding recovery plan implementation to appropriate Federal or other entities so that they can take these comments into account during the course of implementing recovery actions.

The five plants addressed in this final recovery plan are threatened by one or more of the following: alteration, destruction, and fragmentation of habitat resulting from urban and golf course development; recreational activities; competition with nonnative plant species; herbivory from native or nonnative species; demographic stochasticity; modifications in hydrology; loss of individuals from roadside maintenance activities; and disruption of natural fire cycles due to fire suppression associated with increasing residential development around and within occupied habitat.

The objective of this plan is to provide a framework for the recovery of these species so that protection by the Act is no longer necessary. Actions necessary to accomplish this objective include: (1) Permanent protection of habitat presently occupied by the species and the surrounding ecosystem on which they depend, with long-term commitments to conserving the species; (2) in protected habitat, successful control of invasive nonnative plants and successful management of other problems through at least 12 years; (3) development of management strategies that include results from research on the life histories of the taxa, and results from monitoring the species' responses to vegetation management; (4) surveys for additional populations, and successful reintroductions or establishment of populations for *Astragalus tener* var. *titi, Potentilla hickmanii,* and *Trifolium trichocalyx,* with populations of all five species assured of long-term survival; (5) establishment of seed banks; and (6) existing populations of *Cupressus goveniana* ssp. *goveniana* are assured of long-term survival, including successful recruitment and reproduction. Once these criteria have been met, *Cupressus goveniana* ssp. *goveniana* may be considered for delisting and *Astragalus tener* var. *titi, Piperia yadonii, Potentilla hickmanii,* and *Trifolium trichocalyx* may be considered for downlisting.

Authority: The authority for this action is section 4(f) of the Endangered Species Act, 16 U.S.C. 1533(f).

Dated: August 19, 2004.

Steve Thompson,

Manager, California/Nevada Operations Office, Region 1, U.S. Fish and Wildlife Service.

[FR Doc. 04–27810 Filed 12–17–04; 8:45 am]

BILLING CODE 4310–55–P

DEPARTMENT OF THE INTERIOR

Fish and Wildlife Service

Recovery Plan for *Chorizanthe robusta* var. *robusta* (Robust Spineflower)

AGENCY: U.S. Fish and Wildlife Service, Interior.

ACTION: Notice of document availability.

SUMMARY: The U.S. Fish and Wildlife Service (''we'') announces the availability of the Recovery Plan for *Chorizanthe robusta* var. *robusta* (Robust Spineflower). This plant taxon is found along the central coast of California, primarily in Santa Cruz and Marin Counties. Historically, this plant also occurred in San Francisco, Alameda, Santa Clara, San Mateo, and Monterey Counties, California.

ADDRESSES: Copies of this recovery plan are available by request from the U.S. Fish and Wildlife Service, Ventura Fish and Wildlife Office, 2493 Portola Road, Suite B, Ventura, California 93003 (telephone: 805–644–1766). An electronic copy of the recovery plan is also available at: *http://endangered.fws.gov/recovery/index.html#plans.*

FOR FURTHER INFORMATION CONTACT: Connie Rutherford, Botanist, at the above Ventura address.

SUPPLEMENTARY INFORMATION:

Background

Restoring endangered or threatened animals and plants to the point where they are again secure, self-sustaining members of their ecosystems is a primary goal of our endangered species program. To help guide the recovery effort, we are working to prepare recovery plans for most of the listed species native to the United States. Recovery plans describe actions considered necessary for the conservation of the species, establish criteria for the recovery levels for downlisting or delisting them, and estimate time and cost for implementing the recovery measures needed.

The Endangered Species Act (Act) requires the development of recovery plans for listed species unless such a plan would not promote the conservation of a particular species. Section 4(f) of the Act requires that public notice and an opportunity for public review and comment be provided during recovery plan development. The Draft Recovery Plan for *Chorizanthe robusta* var. *robusta* was available for public comment from September 19, 2000, through November 20, 2000 (65 FR 56590). Information presented during the public comment period has been considered in the preparation of this final recovery plan, and is summarized in Appendix C of the recovery plan. We will forward substantive comments regarding recovery plan implementation to appropriate Federal or other entities so they can take these comments into account in the course of implementing recovery actions.

Chorizanthe robusta var. *robusta* was listed as endangered in 1994, and 190 hectares (469 acres) of critical habitat were designated in 2002. *Chorizanthe robusta* var. *robusta* is restricted to sandy soils along the coast and near-coastal areas in Santa Cruz County, and from the Point Reyes National Seashore in Marin County, California.

Chorizanthe robusta var. *robusta* is threatened by urban development, recreational activities, and competition with non-native vegetation. In addition, some of the populations contain very

low numbers of individuals, which put them at great risk of extinction due to random naturally occurring (stochastic) events.

The objective of this plan is to provide a framework for the recovery of *Chorizanthe robusta* var. *robusta* so that protection by the Act is no longer necessary. Actions necessary to accomplish this objective include: (1) Protect existing habitat; (2) manage existing habitat through implementation plans; (3) conduct research on the taxonomy, ecology, biology, and management of *Chorizanthe robusta* var. *robusta*; (4) establish new populations within the historical range of the species; (5) review and revise recovery guidelines; and (6) develop and implement an outreach program to provide information to the public.

Authority: The authority for this action is section 4(f) of the Endangered Species Act, 16 U.S.C. 1533(f).

Dated: August 23, 2004.

Steve Thompson,

Manager, California/Nevada Operations Office, U.S. Fish and Wildlife Service.

[FR Doc. 04–27811 Filed 12–17–04; 8:45 am]

BILLING CODE 4310–55–P

DEPARTMENT OF THE INTERIOR

Bureau of Indian Affairs

Indian Gaming

AGENCY: Bureau of Indian Affairs, Interior.

ACTION: Notice of Approved Tribal-State Class III Gaming Compact.

SUMMARY: This notice publishes an Approval of the Amendment to the Tribal-State Compact between the Buena Vista Rancheria of Me-Wuk Indians and the State of California.

EFFECTIVE DATE: December 20, 2004.

FOR FURTHER INFORMATION CONTACT: George T. Skibine, Director, Office of Indian Gaming Management, Office of the Deputy Assistant Secretary–Policy and Economic Development, Washington, DC 20240, (202) 219–4066.

SUPPLEMENTARY INFORMATION: Under Section 11 of the Indian Gaming Regulatory Act of 1988 (IGRA) Public Law 100–497, 25 U.S.C. 2710, the Secretary of the Interior shall publish in the **Federal Register** notice of approved Tribal–State compacts for the purpose of engaging in Class III gaming activities on Indian lands. This Amendment increases the number of gaming devices that the Tribe may operate and extends the term of the Compact until December 31, 2025.

The Acting Principal Deputy Assistant Secretary–Indian Affairs, Department of the Interior, through his delegated authority, is publishing notice that the Amendment to the Tribal–State Compact between the State of California and the Buena Vista Rancheria of Me-Wuk Indians is in effect.

Dated: December 6, 2004.

Michael D. Olsen,

Acting Principal Deputy Assistant Secretary–Indian Affairs.

[FR Doc. 04–27713 Filed 12–17–04; 8:45 am]

BILLING CODE 4310–4N–P

DEPARTMENT OF THE INTERIOR

Bureau of Indian Affairs

Indian Gaming

AGENCY: Bureau of Indian Affairs, Interior.

ACTION: Notice of Approved Tribal-State Class III Gaming Compact.

SUMMARY: This notice publishes the Approval of the Tribal-State Compact between Coyote Valley Band of Pomo Indians and the State of California.

EFFECTIVE DATE: December 20, 2004.

FOR FURTHER INFORMATION CONTACT: George T. Skibine, Director, Office of Indian Gaming Management, Office of the Deputy Assistant Secretary–Policy and Economic Development, Washington, DC 20240, (202) 219–4066.

SUPPLEMENTARY INFORMATION: Under section 11 of the Indian Gaming Regulatory Act of 1988 (IGRA) Public Law 100–497, 25 U.S.C. 2710, the Secretary of the Interior shall publish in the **Federal Register** notice of approved Tribal-State compacts for the purpose of engaging in Class III gaming activities on Indian lands. The compact allows for one gaming facility and authorizes up to 2,000 gaming devices, any banking or percentage card games, and any devices or games authorized under state law to the state lottery. Finally, the term of the compact is extended until December 31, 2025. The Acting Principal Deputy Assistant Secretary–Indian Affairs, Department of the Interior, through his delegated authority, is publishing notice that the Amendment to the Tribal-State Compact between the State of California and the Coyote Valley Band of Pomo Indians is now in effect.

Dated: December 6, 2004.

Michael D. Olsen,

Acting Principal Deputy Assistant Secretary–Indian Affairs.

[FR Doc. 04–27712 Filed 12–17–04; 8:45 am]

BILLING CODE 4310–4N–P

DEPARTMENT OF THE INTERIOR

Bureau of Indian Affairs

Indian Gaming

AGENCY: Bureau of Indian Affairs, Interior.

ACTION: Notice of Approved Tribal-State Class III Gaming Compact.

SUMMARY: This notice publishes the Approval of the Tribal-State Compact between the State of California and the Fort Mojave Indian Tribe.

EFFECTIVE DATE: December 20, 2004.

FOR FURTHER INFORMATION CONTACT: George T. Skibine, Director, Office of Indian Gaming Management, Office of the Deputy Assistant Secretary–Policy and Economic Development, Washington, DC 20240, (202) 219–4066.

SUPPLEMENTARY INFORMATION: Under Section 11 of the Indian Gaming Regulatory Act of 1988 (IGRA) Public Law 100–497, 25 U.S.C. 2710, the Secretary of the Interior shall publish in the **Federal Register** notice of approved Tribal-State compacts for the purpose of engaging in Class III gaming activities on Indian lands. The compact allows for one gaming facility and authorizes up to 1,500 gaming devices, any banking or percentage card games, and any devices or games authorized under state law to the state lottery. Finally, the term of the compact is until December 31, 2025. The Amendment, also, authorizes annual payments to the State for geographical exclusivity. The Acting Principal Deputy Assistant Secretary–Indian Affairs, Department of the Interior, through his delegated authority, is publishing notice that the Amendment to the Tribal–State Compact between the State of California and the Fort Mojave Indian Tribe is now in effect.

Dated: December 6, 2004.

Michael D. Olsen,

Acting Principal Deputy Assistant Secretary–Indian Affairs.

[FR Doc. 04–27714 Filed 12–17–04; 8:45 am]

BILLING CODE 4310–4N–P

DEPARTMENT OF THE INTERIOR

Bureau of Indian Affairs

Indian Gaming

AGENCY: Bureau of Indian Affairs, Interior.

ACTION: Notice of Approved Tribal-State Class III Gaming Compact.

SUMMARY: This notice publishes the Approval of the Tribal-State Compact

between the Sovereign Indian Nation of the Sac and Fox Tribe of the Mississippi in Iowa and the Sovereign State of Iowa.

EFFECTIVE DATE: December 20, 2004.

FOR FURTHER INFORMATION CONTACT: George T. Skibine, Director, Office of Indian Gaming Management, Office of the Deputy Assistant Secretary–Policy and Economic Development, Washington, DC 20240, (202) 219–4066.

SUPPLEMENTARY INFORMATION: Under section 11 of the Indian Gaming Regulatory Act of 1988 (IGRA) Public Law 100–497, 25 U.S.C. 2710, the Secretary of the Interior shall publish in the **Federal Register** notice of approved Tribal-State compacts for the purpose of engaging in Class III gaming activities on Indian lands. This Compact allows for the extension of the current Compact and clarifies the regulatory scheme.

Dated: December 2, 2004.

Michael D. Olsen,

Acting Principal Deputy Assistant Secretary–Indian Affairs.

[FR Doc. 04–27710 Filed 12–17–04; 8:45 am]

BILLING CODE 4310–4N–P

DEPARTMENT OF THE INTERIOR

Bureau of Indian Affairs

Indian Gaming

AGENCY: Bureau of Indian Affairs, Interior.

ACTION: Notice of Approved Tribal–State Class III Gaming Compact.

SUMMARY: This notice publishes an Approval of the Amendment to the Tribal–State Compact between the Flandreau Santee Sioux Executive Committee and the State of South Dakota.

EFFECTIVE DATE: December 20, 2004.

FOR FURTHER INFORMATION CONTACT: George T. Skibine, Director, Office of Indian Gaming Management, Office of the Deputy Assistant Secretary–Policy and Economic Development, Washington, DC 20240, (202) 219–4066.

SUPPLEMENTARY INFORMATION: Under section 11 of the Indian Gaming Regulatory Act of 1988 (IGRA) Public Law 100–497, 25 U.S.C. 2710, the Secretary of the Interior shall publish in the **Federal Register** notice of approved Tribal–State compacts for the purpose of engaging in Class III gaming activities on Indian lands. This Amendment allows for the expansion of the Tribe's simulcast operation to provide for runners.

Dated: December 6, 2004.

Michael D. Olsen,

Acting Principal Deputy Assistant Secretary–Indian Affairs.

[FR Doc. 04–27711 Filed 12–17–04; 8:45 am]

BILLING CODE 4310–4N–P

DEPARTMENT OF THE INTERIOR

Bureau of Land Management

[OR–030–1020–PG; G 05–0036]

Teleconference Meeting Notice for the John Day/Snake Resource Advisory Council

AGENCY: Bureau of Land Management (BLM), Vale District, Interior.

ACTION: Teleconference meeting notice for the John Day/Snake Resource Advisory Council.

SUMMARY: The John Day/Snake Resource Advisory Council (JDSRAC) will conduct a public meeting by teleconference on Wednesday, January 12, 2005, from 7 to 9 p.m. Pacific Time. The meeting is open to the public; however, teleconference lines are limited. Please call or contact Peggy Diegan at the Vale District Office, 100 Oregon Street, Vale, OR 97918, (541) 473–3144, to obtain the dial-in number. During the teleconference, the JDSRAC will come to consensus on comments on the Blue Mountain Forest Plan Revision draft vision document.

FOR FURTHER INFORMATION CONTACT: Any member of the public wishing further information concerning the meeting or who wishes to submit oral or written comments should contact Debbie Lyons at the above address (541) 473–6218 or e-mail *Debra_Lyons@or.blm.gov.* Comments must be in writing to Debbie Lyons by January 4, 2005. For teleconference call meetings, opportunities for oral comment will be limited to no more than five minutes per speaker and no more than fifteen minutes total.

Dated: December 13, 2004.

Larry Frazier,

Associate District Manager.

[FR Doc. 04–27699 Filed 12–17–04; 8:45 am]

BILLING CODE 4310–33–P

DEPARTMENT OF THE INTERIOR

National Park Service

Notice of Inventory Completion: U.S. Department of the Interior, National Park Service, Effigy Mounds National Monument, Harpers Ferry, IA

AGENCY: National Park Service, Interior.

ACTION: Notice.

SUMMARY: Pursuant to the Native American Graves Protection and Repatriation Act (NAGPRA), the U.S. Department of the Interior, National Park Service, Midwest Regional Office determined that the physical remains of 12 individuals of Native American ancestry and three associated funerary objects in Effigy Mounds National Monument's collections, described below in **Information about cultural items**, are culturally unidentifiable. The Native American Graves Protection and Repatriation Review Committee (Review Committee) recommended that Effigy Mounds National Monument, Harpers Ferry, IA, repatriate the human remains and associated funerary objects to the Sac and Fox Nation of Missouri in Kansas and Nebraska; Sac and Fox Nation, Oklahoma; and Sac and Fox Tribe of the Mississippi in Iowa.

The National Park Service publishes this notice on behalf of Effigy Mounds National Monument as part of the National Park Service's administrative responsibilities under NAGPRA. The determinations within this notice are the sole responsibility of the museum, institution, or Federal agency that has control of the Native American human remains and associated funerary objects. The National NAGPRA Program is not responsible for the determinations within this notice.

Information about NAGPRA is available online at *www.cr.nps.gov/nagpra.*

DATES: Repatriation of the cultural items to the Indian tribes listed above in **SUMMARY** may proceed after January 19, 2005, if no additional claimants come forward. Representatives of any other Indian tribe that believes itself to be culturally affiliated with the cultural items should contact Effigy Mounds National Monument before January 19, 2005.

SUPPLEMENTARY INFORMATION:

Authority: 25 U.S.C. 3001 *et seq.*; 43 CFR 10; and 16 U.S.C. 18f–2.

Contact. Contact Phyllis Ewing, Superintendent, Effigy Mounds National Monument, 151 Highway 76, Harpers Ferry, IA 52146, telephone (563) 873-3491, e-mail *Phyllis_Ewing@nps.gov*, regarding determinations stated in this notice or to claim the cultural items described in this notice.

Consultation. Effigy Mounds National Monument identified the cultural items and assessed the cultural affiliation of the cultural items in consultation with representatives of the Ho-Chunk Nation of Wisconsin (formerly the Wisconsin

Winnebago Tribe); Iowa Tribe of Kansas and Nebraska; Iowa Tribe of Oklahoma; Lower Sioux Indian Community in the State of Minnesota; Otoe-Missouria Tribe of Indians, Oklahoma; Prairie Island Indian Community in the State of Minnesota; Sac and Fox Nation of Missouri in Kansas and Nebraska; Sac and Fox Nation, Oklahoma; Sac and Fox Tribe of the Mississippi in Iowa; Shakopee Mdewakanton Sioux Community of Minnesota; Upper Sioux Community, Minnesota; and Winnebago Tribe of Nebraska.

Information about cultural items. In 1952, National Park Service archeologist Paul L. Beaubien removed human remains representing a minimum of 12 individuals from Mound 57 at Effigy Mounds National Monument, Allamakee County, IA, during an authorized National Park Service excavation. At the time of removal, the site was on Federal land.

The cultural material recovered from Mound 57 was identified as Middle Woodland (1700-2200 B.P.). Human remains from Mound 57 were examined in 1952-53 by Alton K. Fisher, then Professor of Dentistry at the University of Iowa. Archival records at Effigy Mounds National Monument indicate Dr. Fisher took the remains to Iowa City for analysis, and in 1953 requested that Mr. Beaubien pick up the remains. No further information is available about the disposition of the human skeletal material following Dr. Fisher's request. Recently, the human remains were returned to Effigy Mounds National Monument. A detailed assessment of the human remains was made by the Burials Program, Iowa Office of the State Archaeologist on behalf of the National Park Service during the summer of 2003. The human remains represent 12 individuals distinguished primarily by dentition and fragmented or incomplete cranial and postcranial remains. Seven adults and five sub-adults are represented. No known individuals were identified. The three associated funerary objects are one copper breast plate, one sandstone drill pivot, and one piece of obsidian.

Officials of the National Park Service determined that a relationship of shared group identity could not reasonably be traced between the human remains and associated funerary objects and any present-day Indian tribe. Pursuant to 25 U.S.C. 3001 (3)(A), the three objects described above are reasonably believed to have been placed with or near individual human remains at the time of death or later as part of the death rite or ceremony.

According to the Review Committee's charter, the Review Committee is responsible for recommending specific actions for disposition of culturally unidentifiable human remains. In July 2004, Effigy Mounds National Monument requested that the Review Committee recommend repatriation of the 12 culturally unidentifiable human remains and associated funerary objects to the tribes listed above in **SUMMARY** as the aboriginal occupants of the lands encompassing the present-day Effigy Mounds National Monument. Effigy Mounds National Monument is located within the area covered by the Treaty of September 21, 1832 between the Sauk and Fox tribes and the United States (Stat. L. VII 374), and is located within the area covered by the November 23, 1973 final award of the Indian Claims Commission to the Sauk and Fox tribes (4 Ind. Cl. Comm. 367 [1957]). The Review Committee considered the proposal at its September 2004 meeting in Washington, DC, and recommended repatriation of the human remains and associated funerary objects to the three tribes. The National Park Service intends to convey the three associated funerary objects to the Sac and Fox Nation of Missouri in Kansas and Nebraska; Sac and Fox Nation, Oklahoma; and Sac and Fox Tribe of the Mississippi in Iowa pursuant to 16 U.S.C. 18f-2.

A September 21, 2004, letter from the Designated Federal Officer to the superintendent of Effigy Mounds National Monument transmitted the Review Committee's recommendation that the park repatriate the human remains and associated funerary objects to the tribes listed above in Summary contingent on the publication of a Notice of Inventory Completion in the **Federal Register**. This notice fulfills that requirement.

Determinations. Under 25 U.S.C. 3003, Effigy Mounds National Monument officials determined that the human remains represent the physical remains of 12 individuals of Native American ancestry; and National Park Service officials determined that the human remains and associated funerary objects are culturally unidentifiable.

Notification. Effigy Mounds National Monument is responsible for sending copies of this notice to the consulted Indian tribes listed above in **Consultation**.

Dated: December 2, 2004

Sherry Hutt,

Manager, National NAGPRA Program.

[FR Doc. 04–27786 Filed 12–17–04]

BILLING CODE 4312–50–S

DEPARTMENT OF THE INTERIOR

Notice of Inventory Completion: UCLA Fowler Museum of Cultural History, University of California, Los Angeles, Los Angeles, CA

AGENCY: National Park Service, Interior.

ACTION: Notice.

Notice is here given in accordance with provisions of the Native American Graves Protection and Repatriation Act (NAGPRA), 25 U.S.C. 3003, of the completion of an inventory of human remains and associated funerary objects in the possession of the UCLA Fowler Museum of Cultural History, University of California, Los Angeles, Los Angeles, CA. The human remains and associated funerary objects were removed from a site in Mono County, CA.

This notice is published as part of the National Park Service's administrative responsibilities under NAGPRA, 25 U.S.C. 3003 (d)(3). The determinations within this notice are the sole responsibility of the museum, institution, or Federal agency that has control of the Native American human remains and associated funerary objects. The National Park Service is not responsible for the determinations within this notice.

A detailed assessment of the human remains was made by the UCLA Fowler Museum of Cultural History professional staff in consultation with representatives of the Battle Mountain Band of the Te-Moak Tribe of Western Shoshone Indians of Nevada; Big Pine Band of Owens Valley Paiute Shoshone Indians of the Big Pine Reservation, California; Bridgeport Paiute Indian Colony of California; Burns Paiute Tribe of the Burns Paiute Indian Colony of Oregon; Cedarville Rancheria, California; Confederated Tribes of the Goshute Reservation, Nevada and Utah; Confederated Tribes of the Warm Springs Reservation of Oregon; Death Valley Timbi-Sha Shoshone Band of California; Duckwater Shoshone Tribe of the Duckwater Reservation, Nevada; Elko Band of the Te-Moak Tribe of Western Shoshone Indians of Nevada; Ely Shoshone Tribe of Nevada; Fort Bidwell Indian Community of the Fort Bidwell Reservation of California; Fort Independence Indian Community of Paiute Indians of the Fort Independence Reservation, California; Fort McDermitt Paiute and Shoshone Tribes of the Fort McDermitt Indian Reservation, Nevada and Oregon; Las Vegas Tribe of Paiute Indians of the Las Vegas Indian Colony, Nevada; Lovelock Paiute Tribe of the Lovelock Indian Colony, Nevada; Moapa Band of Paiute Indians of the Moapa

River Indian Reservation, Nevada; Paiute Indian Tribe of Utah; Paiute-Shoshone Indians of the Bishop Community of the Bishop Colony, California; Paiute-Shoshone Tribe of the Fallon Reservation and Colony, Nevada; Paiute-Shoshone Indians of the Lone Pine Community of the Lone Pine Reservation, California; Pyramid Lake Paiute Tribe of the Pyramid Lake Reservation, Nevada; Reno-Sparks Indian Colony, Nevada; Shoshone-Bannock Tribes of the Fort Hall Reservation of Idaho; Shoshone-Paiute Tribes of the Duck Valley Reservation, Nevada; Shoshone Tribe of the Wind River Reservation, Wyoming; Skull Valley Band of Goshute Indians of Utah; South Fork Band of the Te-Moak Tribe of Western Shoshone Indians of Nevada; Summit Lake Paiute Tribe of Nevada; Susanville Indian Rancheria, California; Utu Utu Gwaitu Paiute Tribe of the Benton Paiute Reservation, California; Walker River Paiute Tribe of the Walker River Reservation, Nevada; Washoe Tribe of Nevada and California; Wells Band of the Te-Moak Tribe of Western Shoshone Indians of Nevada; Winnemucca Indian Colony of Nevada; Yerington Paiute Tribe of the Yerington Colony & Campbell Ranch, Nevada; Yomba Shoshone Tribe of the Yomba Reservation, Nevada; and the Mono Lake Kutzadika Indian Community (a nonfederally recognized Indian group) and Coleville Onadika (Salt Eaters) in Antelope Valley (a nonfederally recognized Indian group).

In 1959, human remains representing one individual were removed from a burial on the Cain Ranch (site CA-MNO–384), Mono County, CA, by Emma Lou Davis and were accessioned by the University of California, Los Angeles the same year. No known individual was identified. The 75 associated funerary objects are 70 shell beads, 2 bone awl pieces, 1 haliotis pendant, 1 haliotis fragment, and 1 deer phalanx fragment.

The Mono Basin site is located within the traditional territory of the Northern Paiute, Owens Valley Paiute, and Western Shoshone tribes. The artifacts are consistent with others documented as associated with the indigenous inhabitants of the area. The burial dates to the transition between the Middle and Late Archaic periods. According to archaeologists, the Mono Basin area has been used by indigenous groups for as long as 8,000 years. Tribal representatives from the Mono Lake Kutzadika (a nonfederally recognized Indian group) stated that Mono Lake families are related to families who are now members of the Utu Utu Gwaitu Benton Paiute Tribe of the Benton Paiute Reservation, California and the Bridgeport Paiute Indian Colony of California. Joseph Saulque, Chair of the Utu Utu Gwaitu Benton Paiute Tribe, said that he and others consider that the Owens Valley and Northern Paiute are all one related people, and that they are all indigenous to the areas in which they now reside. Elders of the Bridgeport Paiute Indian Colony of California reviewed the archaeological report for the burial and said that they recognized many elements of a traditional Paiute burial and that the burial was not too old to be Paiute.

Officials of the UCLA Fowler Museum of Cultural History have determined that, pursuant to 25 U.S.C. 3001 (9–10), the human remains described above are the physical remains of one individual of Native American ancestry. Officials of the UCLA Fowler Museum of Cultural History have also determined that, pursuant to 25 U.S.C. 3001 (3)(A), the 75 objects described above are reasonably believed to have been placed with or near individual human remains at the time of death or later as part of the death rite or ceremony. Lastly, officials of the UCLA Fowler Museum of Cultural History have determined that, pursuant to 25 U.S.C. 3001 (2), there is a relationship of shared group identity that can be reasonably traced between the Native American human remains and associated funerary objects and the Battle Mountain Band of the Te-Moak Tribe of Western Shoshone Indians of Nevada; Big Pine Band of Owens Valley Paiute Shoshone Indians of the Big Pine Reservation, California; Bridgeport Paiute Indian Colony of California; Burns Paiute Tribe of the Burns Paiute Indian Colony of Oregon; Cedarville Rancheria, California; Confederated Tribes of the Goshute Reservation, Nevada and Utah; Confederated Tribes of the Warm Springs Reservation of Oregon; Death Valley Timbi-Sha Shoshone Band of California; Duckwater Shoshone Tribe of the Duckwater Reservation, Nevada; Elko Band of the Te-Moak Tribe of Western Shoshone Indians of Nevada; Ely Shoshone Tribe of Nevada; Fort Bidwell Indian Community of the Fort Bidwell Reservation of California; Fort Independence Indian Community of Paiute Indians of the Fort Independence Reservation, California; Fort McDermitt Paiute and Shoshone Tribes of the Fort McDermitt Indian Reservation, Nevada and Oregon; Las Vegas Tribe of Paiute Indians of the Las Vegas Indian Colony, Nevada; Lovelock Paiute Tribe of the Lovelock Indian Colony, Nevada; Moapa Band of Paiute Indians of the Moapa River Indian Reservation, Nevada; Paiute Indian Tribe of Utah; Paiute-Shoshone Indians of the Bishop Community of the Bishop Colony, California; Paiute-Shoshone Tribe of the Fallon Reservation and Colony, Nevada; Paiute-Shoshone Indians of the Lone Pine Community of the Lone Pine Reservation, California; Pyramid Lake Paiute Tribe of the Pyramid Lake Reservation, Nevada; Reno-Sparks Indian Colony, Nevada; Shoshone-Bannock Tribes of the Fort Hall Reservation of Idaho; Shoshone-Paiute Tribes of the Duck Valley Reservation, Nevada; Shoshone Tribe of the Wind River Reservation, Wyoming; Skull Valley Band of Goshute Indians of Utah; South Fork Band of the Te-Moak Tribe of Western Shoshone Indians of Nevada; Summit Lake Paiute Tribe of Nevada; Susanville Indian Rancheria, California; Utu Utu Gwaitu Paiute Tribe of the Benton Paiute Reservation, California; Walker River Paiute Tribe of the Walker River Reservation, Nevada; Washoe Tribe of Nevada and California; Wells Band of the Te-Moak Tribe of Western Shoshone Indians of Nevada; Winnemucca Indian Colony of Nevada; Yerington Paiute Tribe of the Yerington Colony & Campbell Ranch, Nevada; and Yomba Shoshone Tribe of the Yomba Reservation, Nevada, and there is a cultural relationship between the Native American human remains and associated funerary objects and the Mono Lake Kutzadika Indian Community (a nonfederally recognized Indian group) and the Coleville Onadika (Salt Eaters) in Antelope Valley (a nonfederally recognized Indian group). The University of California, Los Angeles has received a claim from the Utu Utu Gwaitu Paiute Tribe of the Benton Paiute Reservation, Califonia for the human remains and associated funerary objects removed from the Cain Ranch site.

Representatives of any other Indian tribe that believes itself to be culturally affiliated with the human remains and associated funerary objects should contact Diana Wilson, UCLA NAGPRA Coordinator, Office of the Vice Chancellor, Research, University of California, Los Angeles, Box 951405, Los Angeles, CA 90095–1405, telephone (310) 825–1864, before January 19, 2005. Repatriation of the human remains and associated funerary objects to the Utu Utu Gwaitu Paiute Tribe of the Benton Paiute Reservation, California may proceed after that date if no additional claimants come forward.

UCLA Fowler Museum of Cultural History is responsible for notifying the 37 tribes and the 2 nonfederally

recognized Indian groups listed above that this notice has been published.

Dated: December 14, 2004.

Sherry Hutt,

Manager, National NAGPRA Program.

[FR Doc. 04–27787 Filed 12–17–04; 8:45 am]

BILLING CODE 4312–50–S

DEPARTMENT OF THE INTERIOR

Bureau of Reclamation

Central Valley Project Improvement Act, Water Management Plans.

AGENCY: Bureau of Reclamation, Interior.

ACTION: Notice of Availability.

SUMMARY: The following Water Management Plans are available for review:

- Citrus Heights Water District.
- Del Puerto Water District.
- Fair Oaks Water District.
- Orange Vale Water District.
- Shasta View Irrigation District.

To meet the requirements of the Central Valley Project Improvement Act of 1992 (CVPIA) and the Reclamation Reform Act of 1982, the Bureau of Reclamation (Reclamation) has developed and published the Criteria for Evaluating Water Management Plans (Criteria). Note: For the purpose of this announcement, Water Management Plans (Plans) are considered the same as Water Conservation Plans. The above districts have developed a Plan, which Reclamation has evaluated and preliminarily determined to meet the requirements of these Criteria. Reclamation is publishing this notice in order to allow the public to review the Plans and comment on the preliminary determinations. Public comment on Reclamation's preliminary (*i.e.*, draft) determination is invited at this time.

DATES: All public comments must be received by January 19, 2005.

ADDRESSES: Please mail comments to Leslie Barbre, Bureau of Reclamation, 2800 Cottage Way, Sacramento, California 95825, or contact at 916–978–5232 (TDD 978–5608), or e-mail at *lbarbre@mp.usbr.gov.*

FOR FURTHER INFORMATION CONTACT: To be placed on a mailing list for any subsequent information, please contact Ms. Barbre at the e-mail address or telephone number above.

SUPPLEMENTARY INFORMATION: We are inviting the public to comment on our preliminary (*i.e.*, draft) determination of Plan adequacy. Section 3405(e) of the CVPIA (Title 34 Public Law 102–575) requires the Secretary of the Interior to establish and administer an office on Central Valley Project water conservation best management practices that shall ''* * * develop criteria for evaluating the adequacy of all water conservation plans developed by project contractors, including those plans required by Section 210 of the Reclamation Reform Act of 1982.'' Also, according to Section 3405(e)(1), these Criteria must be developed ''* * * with the purpose of promoting the highest level of water use efficiency reasonably achievable by project contractors using best available cost-effective technology and best management practices.'' These Criteria state that all parties (Contractors) that contract with Reclamation for water supplies (municipal and industrial contracts over 2,000 acre-feet and agricultural contracts over 2,000 irrigable acres) must prepare Plans that contain the following information:

1. Description of the District.
2. Inventory of Water Resources.
3. Best Management Practices (BMPs) for Agricultural Contractors.
4. BMPs for Urban Contractors.
5. BMP Plan Implementation.
6. BMP Exemption Justification.

Reclamation will evaluate Plans based on these Criteria. A copy of these Plans will be available for review at Reclamation's Mid-Pacific (MP) Regional Office located in Sacramento, California, and the local area office.

Our practice is to make comments, including names and home addresses of respondents, available for public review. Individual respondents may request that Reclamation withhold their home address from public disclosure, and we will honor such request to the extent allowable by law. There also may be circumstances in which Reclamation would elect to withhold a respondent's identity from public disclosure, as allowable by law. If you wish us to withhold your name and/or address, you must state this prominently at the beginning of your comments. We will make all submissions from organizations, businesses, and from individuals identifying themselves as representatives or officials of organizations or businesses available for public disclosure in their entirety. If you wish to review a copy of these Plans, please contact Ms. Barbre to find the office nearest you.

Dated: December 2, 2004.

Tracy Slavin,

Chief, Program Management Branch, Mid-Pacific Region, Bureau of Reclamation.

[FR Doc. 04–27816 Filed 12–17–04; 8:45 am]

BILLING CODE 4310–MN–P

INTERNATIONAL TRADE COMMISSION

[Investigation Nos. 731–TA–1074–1075 (Final)]

Certain Circular Welded Carbon Quality Line Pipe From Korea and Mexico

AGENCY: United States International Trade Commission.

ACTION: Revised schedule for the subject investigations.

EFFECTIVE DATE: December 14, 2004.

FOR FURTHER INFORMATION CONTACT: Fred Ruggles (202–205–3187 or e-mail at *fred.ruggles@usitc.gov*), Office of Investigations, U.S. International Trade Commission, 500 E Street SW., Washington, DC 20436. Hearing-impaired persons can obtain information on this matter by contacting the Commission's TDD terminal on 202–205–1810. Persons with mobility impairments who will need special assistance in gaining access to the Commission should contact the Office of the Secretary at 202–205–2000. General information concerning the Commission may also be obtained by accessing its internet server (*http://www.usitc.gov*). The public record for these investigations may be viewed on the Commission's electronic docket (EDIS) at *http://edis.usitc.gov*.

SUPPLEMENTARY INFORMATION: On October 18, 2004, the Commission established a schedule for the conduct of the final phase of the subject investigations (69 FR 61858, October 21, 2004). Subsequently, the U.S. Department of Commerce terminated its final investigation concerning China. The Commission, therefore, is revising its schedule concerning Korea and Mexico to reflect the expected timing of Commerce's final determinations in the remaining investigations.

The Commission's new schedule for the investigations is as follows: requests to appear at the hearing must be filed with the Secretary to the Commission not later than February 14, 2005; the prehearing conference will be held at the U.S. International Trade Commission Building at 9:30 a.m. on February 18; the deadline for filing prehearing briefs is February 14; the hearing will be held at the U.S. International Trade Commission Building at 9:30 a.m. on February 22; the deadline for filing posthearing briefs is March 1; the Commission will make its final release of information on March 17; and final party comments are due on March 21.

For further information concerning these investigations see the

Commission's notice cited above and the Commission's Rules of Practice and Procedure, part 201, subparts A through E (19 CFR part 201), and part 207, subparts A and C (19 CFR part 207).

Authority: These investigations are being conducted under authority of title VII of the Tariff Act of 1930; this notice is published pursuant to section 207.21 of the Commission's rules.

By order of the Commission.

Issued: December 15, 2004.

Marilyn R. Abbott,

Secretary to the Commission.

[FR Doc. 04–27802 Filed 12–17–04; 8:45 am]

BILLING CODE 7020–02–P

INTERNATIONAL TRADE COMMISSION

[Investigation No. 731–TA–1073 (Final)]

Certain Circular Welded Carbon Quality Line Pipe From China

AGENCY: United States International Trade Commission.

ACTION: Notice of termination of antidumping duty investigation.

SUMMARY: On December 14, 2004, the U.S. Department of Commerce notified the Commission of the termination of its antidumping duty investigation on certain circular welded carbon quality line pipe from China. Accordingly, the Commission gives notice that its antidumping duty investigation concerning such line pipe from China (Investigation No. 731–TA–1073 (Final)) is terminated.

EFFECTIVE DATE: December 14, 2004.

FOR FURTHER INFORMATION CONTACT: Fred Ruggles (202) 205–3187 or via e-mail *fred.ruggles@usitc.gov*), Office of Investigations, U.S. International Trade Commission, 500 E Street, SW., Washington, DC 20436. Hearing-impaired persons can obtain information on this matter by contacting the Commission's TDD terminal on (202) 205–1810. Persons with mobility impairments who will need special assistance in gaining access to the Commission should contact the Office of the Secretary at (202) 205–2000. General information concerning the Commission may also be obtained by accessing its Internet server (*http://www.usitc.gov*). The public record for these investigations may be viewed on the Commission's electronic docket (EDIS) at *http://edis.usitc.gov*.

By order of the Commission.

Issued: December 15, 2004.

Marilyn R. Abbott,

Secretary to the Commission.

[FR Doc. 04–27804 Filed 12–17–04; 8:45 am]

BILLING CODE 7020–02–P

INTERNATIONAL TRADE COMMISSION

[Investigation No. 731–TA–1069 (Final)]

In the Matter of Outboard Engines From Japan; Notice of Commission Determination To Conduct a Portion of the Hearing in Camera

AGENCY: U.S. International Trade Commission.

ACTION: Closure of a portion of a Commission hearing.

SUMMARY: Upon request of respondents American Honda Motor Co., Inc. and Honda Motor Co., Ltd., American Suzuki Motor Corporation and Suzuki Motor Corporation, Nissan Marine Co., Ltd., Tohatsu America Corporation, Tohatsu Corporation, and Tohatsu Marine Corporation, and Yamaha Motor Company, Ltd., Yamaha Marine Company, Ltd., and Yamaha Motor Corporation, U.S.A. (collectively ''Japanese Respondents''), the Commission has determined to conduct a portion of its hearing in the above-captioned investigation scheduled for December 14, 2004, *in camera. See* Commission rules 207.24(d), 201.13(m) and 201.36(b)(4) (19 CFR 207.24(d), 201.13(m) and 201.36(b)(4)). The remainder of the hearing will be open to the public. The Commission has determined that the seven-day advance notice of the change to a meeting was not possible. *See* Commission rule 201.35(a), (c)(1) (19 CFR 201.35(a), (c)(1)).

FOR FURTHER INFORMATION CONTACT: Karen V. Driscoll, Esq., Office of the General Counsel, U.S. International Trade Commission, telephone (202) 205–3092. Hearing-impaired individuals are advised that information on this matter may be obtained by contacting the Commission's TDD terminal on (202) 205–3105.

SUPPLEMENTARY INFORMATION: The Commission believes that Japanese Respondents have justified the need for a closed session. Japanese Respondents seek a closed session to allow for a discussion of business proprietary purchasing, pricing, and financial information. In making this decision, the Commission nevertheless reaffirms its belief that whenever possible its business should be conducted in public.

The hearing will include the usual public presentations by the petitioners and by respondents, with questions from the Commission. In addition, the hearing will include a 10-minute *in camera* session for a confidential presentation by respondents followed by a 10-minute *in camera* rebuttal presentation by petitioners. Questions from the Commission relating to the BPI will follow each of the *in camera* presentations. During the in camera session the room will be cleared of all persons except those who have been granted access to BPI under a Commission administrative protective order (APO) and are included on the Commission's APO service list in this investigation. See 19 CFR 201.35(b)(1), (2). The time for the parties' presentations and rebuttals in the *in camera* session will be taken from their respective overall allotments for the hearing. All persons planning to attend the *in camera* portions of the hearing should be prepared to present proper identification.

Authority: The Acting General Counsel has certified, pursuant to Commission Rule 201.39 (19 CFR 201.39) that, in his opinion, a portion of the Commission's hearing in Outboard Engines from Japan, Inv. No. 731–TA–1069 (Final), may be closed to the public to prevent the disclosure of BPI.

By order of the Commission.

Issued: December 14, 2004.

Marilyn R. Abbott,

Secretary to the Commission.

[FR Doc. 04–27805 Filed 12–17–04; 8:45 am]

BILLING CODE 7020–02–P

DEPARTMENT OF JUSTICE

Community Oriented Policing Services; Agency Information Collection Activities: Proposed Collection; Comments Requested

ACTION: 30-Day Notice of Information Collection Under Review: Department Annual Progress Report.

The Department of Justice (DOJ), Office of Community Oriented Policing Services (COPS) has submitted the following information collection request to the Office of Management and Budget (OMB) for review and approval in accordance with the Paperwork Reduction Act of 1995. The proposed information collection is published to obtain comments from the public and affected agencies. This proposed information collection was previously published in the **Federal Register** Volume 69, Number 155, page 49914 on August 12, 2004, allowing for a 60 day comment period.

The purpose of this notice is to allow for an additional 30 days for public comment until January 19, 2005. This process is conducted in accordance with 5 CFR 1320.10.

Written comments and/or suggestions regarding the items contained in this notice, especially the estimated public burden and associated response time, should be directed to the Office of Management and Budget, Office of Information and Regulatory Affairs, Attention Department of Justice Desk Officer, Washington, DC 20503. Additionally, comments may be submitted to OMB via facsimile to (202) 395–5806. Written comments and suggestions from the public and affected agencies concerning the proposed collection of information are encouraged. Your comments should address one or more of the following four points:

—Evaluate whether the proposed collection of information is necessary for the proper performance of the functions of the agency, including whether the information will have practical utility;
—Evaluate the accuracy of the agencies estimate of the burden of the proposed collection of information, including the validity of the methodology and assumptions used;
—Enhance the quality, utility, and clarity of the information to be collected; and
—Minimize the burden of the collection of information on those who are to respond, including through the use of appropriate automated, electronic, mechanical, or other technological collection techniques or other forms of information technology, *e.g.*, permitting electronic submission of responses.

Overview of this Information Collection

(1) *Type of Information Collection:* New Collection.

(2) *Title of the Form/Collection:* Department Annual Progress Report (DAPR).

(3) *Agency form number, if any, and the applicable component of the Department sponsoring the collection:* None. U.S. Department of Justice, Office of Community Oriented Policing Services.

(4) *Affected public who will be asked or required to respond, as well as a brief abstract:* Primary: Law enforcement agencies that are recipients of COPS hiring grants and/or COPS grants that have a redeployment requirement. The Department Annual Progress Report was part of a business process reengineering effort aimed at minimizing the reporting burden on COPS grantees by streamlining the collection of progress reports and COPS Count information into one annual report.

(5) *An estimate of the total number of respondents and the amount of time estimated for an average respondent to respond/reply:* It is estimated that 9,000 respondents annually will complete this form within 1 hour.

(6) *An estimate of the total public burden (in hours) associated with the collection:* There is an estimated 9,000 total annual burden hours associated with this collection.

If additional information is required contact: Brenda E. Dyer, Department Clearance Officer, United States Department of Justice, Justice Management Division, Policy and Planning Staff, Patrick Henry Building, Suite 1600, 601 D Street NW., Washington, DC 20530.

Dated: December 14, 2004.

Brenda E. Dyer,

Department Clearance Officer, Department of Justice.

[FR Doc. 04–27719 Filed 12–17–04; 8:45 am]

BILLING CODE 4410–AT–P

DEPARTMENT OF JUSTICE

Bureau of Alcohol, Tobacco, Firearms and Explosives

[Docket No. ATF 14N]

Commerce in Explosives; List of Explosive Materials (2004R–6P)

AGENCY: Bureau of Alcohol, Tobacco, Firearms and Explosives (ATF), Department of Justice.

ACTION: Notice of List of Explosive Materials.

SUMMARY: Pursuant to 18 U.S.C. 841(d) and 27 CFR 555.23, the Department must publish and revise at least annually in the **Federal Register** a list of explosives determined to be within the coverage of 18 U.S.C. 841 *et seq.* The list covers not only explosives, but also blasting agents and detonators, all of which are defined as explosive materials in 18 U.S.C. 841(c). This notice publishes the 2004 List of Explosive Materials.

DATES: The list becomes effective upon publication of this notice on December 20, 2004.

FOR FURTHER INFORMATION CONTACT: Wathenia Clark; Program Manager; Explosives Industry Programs Branch; Arson and Explosives Programs Division; Bureau of Alcohol, Tobacco, Firearms and Explosives; United States Department of Justice; 650 Massachusetts Avenue, NW., Washington, DC 20226 (202–927–2310).

SUPPLEMENTARY INFORMATION: The list is intended to include any and all mixtures containing any of the materials on the list. Materials constituting blasting agents are marked by an asterisk. While the list is comprehensive, it is not all-inclusive. The fact that an explosive material is not on the list does not mean that it is not within the coverage of the law if it otherwise meets the statutory definitions in 18 U.S.C. 841. Explosive materials are listed alphabetically by their common names followed, where applicable, by chemical names and synonyms in brackets.

The Department has not added any new terms to the list of explosives or removed or revised any listing since its last publication.

This list supersedes the List of Explosive Materials dated March 31, 2004 (Docket No. ATF 5N, 69 FR 16958).

Notice of List of Explosive Materials

Pursuant to 18 U.S.C. 841(d) and 27 CFR 555.23, I hereby designate the following as explosive materials covered under 18 U.S.C. 841(c):

A

Acetylides of heavy metals.
Aluminum containing polymeric propellant.
Aluminum ophorite explosive.
Amatex.
  Amatol.
  Ammonal.
  Ammonium nitrate explosive mixtures (cap sensitive).
  *Ammonium nitrate explosive mixtures (non-cap sensitive).
  Ammonium perchlorate having particle size less than 15 microns.
  Ammonium perchlorate composite propellant.
  Ammonium perchlorate explosive mixtures.
  Ammonium picrate [picrate of ammonia, Explosive D].
  Ammonium salt lattice with isomorphously substituted inorganic salts.
  *ANFO [ammonium nitrate-fuel oil].
  Aromatic nitro-compound explosive mixtures.
  Azide explosives.

B

  Baranol.
  Baratol.
  BEAF [1, 2-bis (2, 2-difluoro-2-nitroacetoxyethane)].
  Black powder.
  Black powder based explosive mixtures.
  *Blasting agents, nitro-carbo-nitrates, including non-cap sensitive slurry and water gel explosives.
  Blasting caps.
  Blasting gelatin.
  Blasting powder.
  BTNEC [bis (trinitroethyl) carbonate].
  BTNEN [bis (trinitroethyl) nitramine].
  BTTN [1,2,4 butanetriol trinitrate].
  Bulk salutes.

Butyl tetryl.

C

Calcium nitrate explosive mixture.
Cellulose hexanitrate explosive mixture.
Chlorate explosive mixtures.
Composition A and variations.
Composition B and variations.
Composition C and variations.
Copper acetylide.
Cyanuric triazide.
Cyclonite [RDX].
Cyclotetramethylenetetranitramine [HMX].
Cyclotol.
Cyclotrimethylenetrinitramine [RDX].

D

DATB [diaminotrinitrobenzene].
DDNP [diazodinitrophenol].
DEGDN [diethyleneglycol dinitrate].
Detonating cord.
Detonators.
Dimethylol dimethyl methane dinitrate composition.
Dinitroethyleneurea.
Dinitroglycerine [glycerol dinitrate].
Dinitrophenol.
Dinitrophenolates.
Dinitrophenyl hydrazine.
Dinitroresorcinol.
Dinitrotoluene-sodium nitrate explosive mixtures.
DIPAM [dipicramide; diaminohexanitrobiphenyl].
Dipicryl sulfone.
Dipicrylamine.
Display fireworks.
DNPA [2,2-dinitropropyl acrylate].
DNPD [dinitropentano nitrile].
Dynamite.

E

EDDN [ethylene diamine dinitrate].
EDNA [ethylenedinitramine].
Ednatol.
EDNP [ethyl 4,4-dinitropentanoate].
EGDN [ethylene glycol dinitrate].
Erythritol tetranitrate explosives.
Esters of nitro-substituted alcohols.
Ethyl-tetryl.
Explosive conitrates.
Explosive gelatins.
Explosive liquids.
Explosive mixtures containing oxygen-releasing inorganic salts and hydrocarbons.
Explosive mixtures containing oxygen-releasing inorganic salts and nitro bodies.
Explosive mixtures containing oxygen-releasing inorganic salts and water insoluble fuels.
Explosive mixtures containing oxygen-releasing inorganic salts and water soluble fuels.
Explosive mixtures containing sensitized nitromethane.
Explosive mixtures containing tetranitromethane (nitroform).
Explosive nitro compounds of aromatic hydrocarbons.
Explosive organic nitrate mixtures.
Explosive powders.

F

Flash powder.
Fulminate of mercury.
Fulminate of silver.
Fulminating gold.
Fulminating mercury.
Fulminating platinum.
Fulminating silver.

G

Gelatinized nitrocellulose.
Gem-dinitro aliphatic explosive mixtures.
Guanyl nitrosamino guanyl tetrazene.
Guanyl nitrosamino guanylidene hydrazine.
Guncotton.

H

Heavy metal azides.
Hexanite.
Hexanitrodiphenylamine.
Hexanitrostilbene.
Hexogen [RDX].
Hexogene or octogene and a nitrated N-methylaniline.
Hexolites.
HMTD [hexamethylenetriperoxidediamine].
HMX [cyclo-1,3,5,7-tetramethylene 2,4,6,8-tetranitramine; Octogen].
Hydrazinium nitrate/hydrazine/aluminum explosive system.
Hydrazoic acid.

I

Igniter cord.
Igniters.
Initiating tube systems.

K

KDNBF [potassium dinitrobenzo-furoxane].

L

Lead azide.
Lead mannite.
Lead mononitroresorcinate.
Lead picrate.
Lead salts, explosive.
Lead styphnate [styphnate of lead, lead trinitroresorcinate].
Liquid nitrated polyol and trimethylolethane.
Liquid oxygen explosives.

M

Magnesium ophorite explosives.
Mannitol hexanitrate.
MDNP [methyl 4,4-dinitropentanoate].
MEAN [monoethanolamine nitrate].
Mercuric fulminate.
Mercury oxalate.
Mercury tartrate.
Metriol trinitrate.
Minol-2 [40% TNT, 40% ammonium nitrate, 20% aluminum].
MMAN [monomethylamine nitrate]; methylamine nitrate.
Mononitrotoluene-nitroglycerin mixture.
Monopropellants.

N

NIBTN [nitroisobutametriol trinitrate].
Nitrate explosive mixtures.
Nitrate sensitized with gelled nitroparaffin.
Nitrated carbohydrate explosive.
Nitrated glucoside explosive.
Nitrated polyhydric alcohol explosives.
Nitric acid and a nitro aromatic compound explosive.
Nitric acid and carboxylic fuel explosive.
Nitric acid explosive mixtures.
Nitro aromatic explosive mixtures.
Nitro compounds of furane explosive mixtures.
Nitrocellulose explosive.
Nitroderivative of urea explosive mixture.
Nitrogelatin explosive.
Nitrogen trichloride.
Nitrogen tri-iodide.
Nitroglycerine [NG, RNG, nitro, glyceryl trinitrate, trinitroglycerine].
Nitroglycide.
Nitroglycol [ethylene glycol dinitrate, EGDN].
Nitroguanidine explosives.
Nitronium perchlorate propellant mixtures.
Nitroparaffins Explosive Grade and ammonium nitrate mixtures.
Nitrostarch.
Nitro-substituted carboxylic acids.
Nitrourea.

O

Octogen [HMX].
Octol [75 percent HMX, 25 percent TNT].
Organic amine nitrates.
Organic nitramines.

P

PBX [plastic bonded explosives].
Pellet powder.
Penthrinite composition.
Pentolite.
Perchlorate explosive mixtures.
Peroxide based explosive mixtures.
PETN [nitropentaerythrite, pentaerythrite tetranitrate, pentaerythritol tetranitrate].
Picramic acid and its salts.
Picramide.
Picrate explosives.
Picrate of potassium explosive mixtures.
Picratol.
Picric acid (manufactured as an explosive).
Picryl chloride.
Picryl fluoride.
PLX [95% nitromethane, 5% ethylenediamine].
Polynitro aliphatic compounds.
Polyolpolynitrate-nitrocellulose explosive gels.
Potassium chlorate and lead sulfocyanate explosive.
Potassium nitrate explosive mixtures.
Potassium nitroaminotetrazole.
Pyrotechnic compositions.
PYX [2,6-bis(picrylamino)] 3,5-dinitropyridine.

R

RDX [cyclonite, hexogen, T4, cyclo-1,3,5,-trimethylene-2,4,6,-trinitramine; hexahydro-1,3,5-trinitro-S-triazine].

S

Safety fuse.
Salts of organic amino sulfonic acid explosive mixture.
Salutes (bulk).
Silver acetylide.
Silver azide.
Silver fulminate.
Silver oxalate explosive mixtures.
Silver styphnate.
Silver tartrate explosive mixtures.
Silver tetrazene.
Slurried explosive mixtures of water, inorganic oxidizing salt, gelling agent, fuel, and sensitizer (cap sensitive).
Smokeless powder.
Sodatol.
Sodium amatol.
Sodium azide explosive mixture.
Sodium dinitro-ortho-cresolate.
Sodium nitrate explosive mixtures.
Sodium nitrate-potassium nitrate explosive mixture.
Sodium picramate.
Special fireworks.
Squibs.

Styphnic acid explosives.

T

Tacot [tetranitro-2,3,5,6-dibenzo-1,3a,4,6a tetrazapentalene].
TATB [triaminotrinitrobenzene].
TATP [triacetonetriperoxide].
TEGDN [triethylene glycol dinitrate].
Tetranitrocarbazole.
Tetrazene [tetracene, tetrazine, 1(5-tetrazolyl)-4-guanyl tetrazene hydrate].
Tetrazole explosives.
Tetryl [2,4,6 tetranitro-N-methylaniline].
Tetrytol.
Thickened inorganic oxidizer salt slurried explosive mixture.
TMETN [trimethylolethane trinitrate].
TNEF [trinitroethyl formal].
TNEOC [trinitroethylorthocarbonate].
TNEOF [trinitroethylorthoformate].
TNT [trinitrotoluene, trotyl, trilite, triton].
Torpex.
Tridite.
Trimethylol ethyl methane trinitrate composition.
Trimethylolthane trinitrate-nitrocellulose.
Trimonite.
Trinitroanisole.
Trinitrobenzene.
Trinitrobenzoic acid.
Trinitrocresol.
Trinitro-meta-cresol.
Trinitronaphthalene.
Trinitrophenetol.
Trinitrophloroglucinol.
Trinitroresorcinol.
Tritonal.

U

Urea nitrate.

W

Water-bearing explosives having salts of oxidizing acids and nitrogen bases, sulfates, or sulfamates (cap sensitive).
Water-in-oil emulsion explosive compositions.

X

Xanthamonas hydrophilic colloid explosive mixture.

Approved: December 3, 2004.

Dated: December 3, 2004.

Carl J. Truscott,

Director.

[FR Doc. 04–27730 Filed 12–17–04; 8:45 am]

BILLING CODE 4410–FY–P

DEPARTMENT OF JUSTICE

Office of Justice Programs

Agency Information Collection Activities: Proposed Collection; Comments Requested

ACTION: 30-day notice of information collection under review: Bureau of Justice Assistance Application Form: State Criminal Alien Assistance for Tribal Governments.

The Department of Justice (DOJ), Office of Justice Programs (OJP) has submitted the following information collection request to the Office of Management and Budget (OMB) for review and approval in accordance with the Paperwork Reduction Act of 1995. The proposed information collection is published to obtain comments from the public and affected agencies. This proposed information collection was previously published in the **Federal Register** Volume 69, Number 185, page 57363 on September 24, 2004, allowing for a 60 day comment period.

The purpose of this notice is to allow for an additional 30 days for public comment until January 19, 2005. This process is conducted in accordance with 5 CFR 1320.10.

Written comments and/or suggestions regarding the items contained in this notice, especially the estimated public burden and associated response time, should be directed to the Office of Management and Budget, Office of Information and Regulatory Affairs, Attention Department of Justice Desk Officer, Washington, DC 20503. Additionally, comments may be submitted to OMB via facsimile to (202) 395–5806. Written comments and suggestions from the public and affected agencies concerning the proposed collection of information are encouraged. Your comments should address one or more of the following four points:

—Evaluate whether the proposed collection of information is necessary for the proper performance of the functions of the agency, including whether the information will have practical utility;

—Evaluate the accuracy of the agencies' estimate of the burden of the proposed collection of information, including the validity of the methodology and assumptions used;

—Enhance the quality, utility, and clarity of the information to be collected; and

—Minimize the burden of the collection of information on those who are to respond, including through the use of appropriate automated, electronic, mechanical, or other technological collection techniques or other forms of information technology, *e.g.*, permitting electronic submission of responses.

Overview of This Information Collection

(1) *Type of Information Collection:* Reinstatement, with change, of a previously approved collection for which approval has expired.

(2) *Title of the Form/Collection:* Bureau of Justice Assistance Application Form: State Criminal Alien Assistance for Tribal Governments (SCAAP).

(3) *Agency form number, if any, and the applicable component of the Department sponsoring the collection:* None. Office of Justice Programs.

(4) *Affected public who will be asked or required to respond, as well as a brief abstract:* Primary: State, local and tribal government agencies within the United States and its territories. BJA administers the State Criminal Alien Assistance Program (SCAAP) with the Bureau of Immigration and Customs Enforcement (ICE), and the Department of Homeland Security (DHS). SCAAP provides federal payments to States and localities that incurred correctional officer salary costs for incarcerating undocumented criminal aliens with at least one felony or two misdemeanor convictions for violations of state or local law, and who are incarcerated for at least 4 consecutive days during the designated reporting period. SCAAP is governed by Section 242 of the Immigration and Nationality Act, 8 U.S.C. 123 1(i), as amended, and Title II, Subtitle C, Section 20301, Violent Crime Control and Law Enforcement Act of 1994, Public Law 103–322.

(5) *An estimate of the total number of respondents and the amount of time estimated for an average respondent to respond/reply:* It is estimated that it will take 748 applicants under SCAAP approximately 90 minutes to complete the application form.

(6) *An estimate of the total public burden (in hours) associated with the collection:* The total estimated annual burden hours to complete the certification form is 1,122 hours.

If additional information is required contact: Brenda E. Dyer, Department Clearance Officer, United States Department of Justice, Justice Management Division, Policy and Planning Staff, Patrick Henry Building, Suite 1600, 601 D Street, NW., Washington, DC 20530.

Dated: December 14, 2004.

Brenda E. Dyer,

Department Clearance Officer, Department of Justice.

[FR Doc. 04–27718 Filed 12–17–04; 8:45 am]

BILLING CODE 4410–18–P

DEPARTMENT OF JUSTICE

Office of Justice Programs

Agency Information Collection Activities: Proposed Collection; Comments Requested

ACTION: 60-day notice of information collection under review: National Judicial Reporting Programs.

The Department of Justice (DOJ), Office of Justice Programs (OJP), has submitted the following information collection request to the Office of Management and Budget (OMB) for review and approval in accordance with the Paperwork Reduction Act of 1995. The proposed information collection is published to obtain comments from the public and affected agencies. Comments are encouraged and will be accepted for ''sixty days'' until February 18, 2005. This process is conducted in accordance with 5 CFR 1320.10.

If you have comments, especially on the estimated public burden or associated response time, suggestions, or need a copy of the proposed information collection instrument with instructions or additional information, please contact: Matthew Durose, (202) 307–6119, Bureau of Justice Statistics, Office of Justice Programs, Department of Justice, 810 7th Street, NW., Washington, DC 20531.

Written comments and suggestions from the public and affected agencies concerning the proposed collection of information are encouraged. Your comments should address one or more of the following four points:

—Evaluate whether the proposed collection of information is necessary for the proper performance of the functions of the agency, including whether the information will have practical utility;

—Evaluate the accuracy of the agencies estimate of the burden of the proposed collection of information, including the validity of the methodology and assumptions used;

—Enhance the quality, utility, and clarity of the information to be collected; and

—Minimize the burden of the collection of information on those who are to respond, including through the use of appropriate automated, electronic, mechanical, or other technological collection techniques or other forms of information technology, *e.g.*, permitting electronic submission of responses.

Overview of This Information Collection:

(1) *Type of Information Collection:* Extension of a currently approved collection.

(2) *Title of the Form/Collection:* National Judicial Reporting Program (NJRP).

(3) *Agency form number, if any, and the applicable component of the Department sponsoring the collection:* Form Number: NJRP–1. Bureau of Justice Statistics, Office of Justice Programs, Department of Justice.

(4) *Affected public who will be asked or required to respond, as well as a brief abstract:* Primary: State Court Authorities. The National Judicial Reporting Program (NJRP) is the only collection effort that provides an ability to maintain important statistics on felons convicted and sentenced in state courts. The NJRP enables the Bureau of Justice Statistics, Federal, State, and local correctional administrators, as well as, legislators, researchers, and planners to track changes in the numbers and types of offenses and sentences felons convicted in state courts receive. The NJRP also tracks changes in the demographics, conviction type, number of charges, sentence length, and time between arrest, conviction and sentencing of felons convicted in state courts.

(5) *An estimate of the total number of respondents and the amount of time estimated for an average respondent to respond:* This survey will collect data for approximately 450,772 felons, from 300 responding jurisdictions, at two-year intervals. The annual burden on the respondents is based on the number of hours involved in either providing an automated data file or printout from an existing data base, or manually transferring the information from court records to the NJRP–1 form. The public reporting burden for this collection of information is estimated to average 8.013 hours per respondent.

(6) *An estimate of the total public burden (in hours) associated with the collection:* The burden hours have been estimated based on the following calculations: 300 Respondents × 8.013 Hours = 2,404. Therefore, the total estimated burden hours associated with this collection are 2,404.

If additional information is required contact: Brenda E. Dyer, Department Clearance Officer, United States Department of Justice, Justice Management Division, Policy and Planning Staff, Patrick Henry Building, Suite 1600, 601 D Street NW., Washington, DC 20530.

Dated: December 14, 2004.

Brenda E. Dyer,

Department Clearance Officer, Department of Justice.

[FR Doc. 04–27720 Filed 12–17–04; 8:45 am]

BILLING CODE 4410–18–P

DEPARTMENT OF JUSTICE

Office of Justice Programs

Agency Information Collection Activities: Proposed Collection; Comments Requested

ACTION: 60-day notice of information collection under review: Census of Medical Examiner and Coroner Offices.

The Department of Justice (DOJ), Office of Justice Programs (OJP), has submitted the following information collection request to the Office of Management and Budget (OMB) for review and approval in accordance with the Paperwork Reduction Act of 1995. The proposed information collection is published to obtain comments from the public and affected agencies. Comments are encouraged and will be accepted for ''sixty days'' until February 18, 2005. This process is conducted in accordance with 5 CFR 1320.10.

If you have comments, especially on the estimated public burden or associated response time, suggestions, or need a copy of the proposed information collection instrument with instructions or additional information, please contact: Matthew J. Hickman, Bureau of Justice Statistics, Office of Justice Programs, Department of Justice, 810 Seventh Street NW., Washington, DC 20531.

Written comments and suggestions from the public and affected agencies concerning the proposed collection of information are encouraged. Your comments should address one or more of the following four points:

—Evaluate whether the proposed collection of information is necessary for the proper performance of the functions of the agency, including whether the information will have practical utility;

—Evaluate the accuracy of the agencies estimate of the burden of the proposed collection of information, including the validity of the methodology and assumptions used;

—Enhance the quality, utility, and clarity of the information to be collected; and

—Minimize the burden of the collection of information on those who are to respond, including through the use of appropriate automated, electronic, mechanical, or other technological collection techniques or other forms of information technology, *e.g.*, permitting electronic submission of responses.

Overview of This Information Collection

(1) *Type of Information Collection:* New Collection.

(2) *Title of the Form/Collection:* Census of Medical Examiner and Coroner Offices.

(3) *Agency form number, if any, and the applicable component of the Department sponsoring the collection:* Form Number: ME/C–1. Bureau of Justice Statistics, Office of Justice Programs, Department of Justice.

(4) *Affected public who will be asked or required to respond, as well as a brief abstract:* Primary: State, County, and Local government. Other: None. Under Title 42 U.S.C,. Section 3732 (Attachment 1), the Bureau of Justice Statistics (BJS) is authorized to collect and analyze statistical information regarding the operation of the criminal justice system at the Federal, state, and local levels. Medico-legal death investigation systems are an essential component of the larger criminal justice system. The Census of Medical Examiner and Coroner Offices (CMECO) is a new BJS data collection that will provide a national picture of medico-legal death investigation systems, including personnel, expenditures, functions, workload, and resource needs.

(5) *An estimate of the total number of respondents and the amount of time estimated for an average respondent to respond:* It is estimated that 3,200 respondents will each complete a 1-hour data collection form.

(6) *An estimate of the total public burden (in hours) associated with the collection:* The estimated public burden associated with this collection is 3,200 hours.

If additional information is required contact: Brenda E. Dyer, Department Clearance Officer, United States Department of Justice, Justice Management Division, Policy and Planning Staff, Patrick Henry Building, Suite 1600, 601 D Street, NW., Washington, DC 20530.

Dated: December 14, 2004.

Brenda E. Dyer,

Department Clearance Officer, Department of Justice.

[FR Doc. 04–27721 Filed 12–17–04; 8:45 am]

BILLING CODE 4410–18–P

DEPARTMENT OF LABOR

Employment and Training Administration

[TA–W–55,318]

Allegheny Ludlum, Research/Technical Center, Natrona Heights, PA; Dismissal of Application for Reconsideration

Pursuant to 29 CFR 90.18(C) an application for administrative reconsideration was filed with the Director of the Division of Trade Adjustment Assistance for workers at Allegheny Ludlum, Research/Technical Center, Natrona Heights, Pennsylvania. The application contained no new substantial information which would bear importantly on the Department's determination. Therefore, dismissal of the application was issued.

TA–W–55,318; Allegheny Ludlum Research/Technical Center, Natrona Heights, Pennsylvania (December 8, 2004)

Signed at Washington, DC this 13th day of December, 2004.

Timothy Sullivan,

Director, Division of Trade Adjustment Assistance.

[FR Doc. E4–3739 Filed 12–17–04; 8:45 am]

BILLING CODE 4510–30–P

DEPARTMENT OF LABOR

Employment and Training Administration

Investigations Regarding Certifications of Eligibility To Apply for Worker Adjustment Assistance

Petitions have been filed with the Secretary of Labor under section 221(a) of the Trade Act of 1974 (''the Act'') and are identified in the appendix to this notice. Upon receipt of these petitions, the Director of the Division of Trade Adjustment Assistance, Employment and Training Administration, has instituted investigations pursuant to section 221(a) of the Act.

The purpose of each of the investigations is to determine whether the workers are eligible to apply for adjustment assistance under Title II, Chapter 2, of the Act. The investigations will further relate, as appropriate, to the determination of the date on which total or partial separations began or threatened to begin and the subdivision of the firm involved.

The petitioners or any other persons showing a substantial interest in the subject matter of the investigations may request a public hearing, provided such request is filed in writing with the Director, Division of Trade Adjustment Assistance, at the address shown below, not later than December 30, 2004.

Interested persons are invited to submit written comments regarding the subject matter of the investigations to the Director, Division of Trade Adjustment Assistance, at the address shown below, not later than December 30, 2004.

The petitions filed in this case are available for inspection at the Office of the Director, Division of Trade Adjustment Assistance, Employment and Training Administration, U.S. Department of Labor, Room C–5311, 200 Constitution Avenue, NW., Washington, DC 20210.

Signed at Washington, DC this 10th day of December, 2004.

Timothy Sullivan,

Director, Division of Trade Adjustment Assistance.

APPENDIX

[Petitions instituted between 11/29/2004 and 12/03/2004]

TA–W	Subject firm (petitioners)	Location	Date of institution	Date of petition
56,094	AT&T (CWA)	Charleston, WV	11/29/2004	11/24/2004
56,095	Nidec America Corporation (State)	Torrington, CT	11/29/2004	11/26/2004
56,096	Gasque Plumbing (Wkrs)	Myrtle Beach, SC	11/29/2004	11/19/2004
56,097	Foley Wood Products, Inc. (Comp)	Ellsworth, WI	11/29/2004	11/23/2004
56,098	International Textile Group (Comp)	Burlington, NC	11/29/2004	11/19/2004
56,099	Kenro, Inc. (Div. of Carlisle Companies) (UNITE)	Fredonia, WI	11/29/2004	11/23/2004
56,100	CHF Industries (Wkrs)	Loris, SC	11/29/2004	11/23/2004
56,101	Concord Fabrics, Inc. (Wkrs)	Milledgeville, GA	11/30/2004	11/18/2004
56,102	DSM Elastomers (State)	South Addis, LA	11/30/2004	11/18/2004
56,103	Cherry Electrical Products (Wkrs)	Waukegan, IL	11/30/2004	11/11/2004

APPENDIX—Continued

[Petitions instituted between 11/29/2004 and 12/03/2004]

TA–W	Subject firm (petitioners)	Location	Date of institution	Date of petition
56,104	Pentair Pump (UAW)	Ashland, OH	11/30/2004	11/15/2004
56,105	Vision AIR (Wkrs)	Castle Hayne, NC	11/30/2004	11/19/2004
56,106	Eaton Corporation (PACE)	Cleveland, OH	11/30/2004	11/24/2004
56,107	MI Home Products, Inc. (Wkrs)	Hegins, PA	11/30/2004	11/22/2004
56,108	Atlas Copco Compressors, Inc. (Wkrs)	Holyoke, MA	12/01/2004	11/17/2004
56,109	Bonifay Manufacturing, Inc. (State)	Bonifay, FL	12/01/2004	11/30/2004
56,110	Broyhill National Veneer Plant (Wkrs)	Lenoir, NC	12/01/2004	11/19/2004
56,111	New Dana Corporation (Wkrs)	Mountaintop, PA	12/01/2004	11/23/2004
56,112	Radisys (State)	Hillsboro, OR	12/02/2004	11/23/2004
56,113	Murray, Inc. (Wkrs)	Lawrenceburg, TN	12/01/2004	11/15/2004
56,114	MMC Bidding, Inc., Div. of Bourns (Wkrs)	New Berlin, WI	12/01/2004	11/30/2004
56,115	Action Knitwear, Inc. (Comp)	Bean Station, TN	12/01/2004	11/19/2004
56,116	Northwestern Ag (Comp)	Chattaroy, WA	12/01/2004	11/29/2004
56,117	Peco Manufacturing, Inc. (State)	Portland, OR	12/01/2004	11/22/2004
56,118	Johnson and Johnson (Comp)	Royston, GA	12/01/2004	11/11/2004
56,119	Osram Sylvania (Comp)	Waldoboro, ME	12/02/2004	11/30/2004
56,120	Seneca Foods (Wkrs)	Walla Walla, WA	12/02/2004	11/30/2004
56,121	Robert Bosch Tool Co. (State)	Heber Springs, AR	12/02/2004	12/02/2004
56,122	Siemens Energy and Automation, Inc. (Comp)	Tucker, GA	12/03/2004	11/18/2004
56,123	Wellington Cordage, LLC (Comp)	Greensboro, GA	12/03/2004	11/09/2004
56,124	Associated Rubber Company (Comp)	Calhoun, GA	12/03/2004	12/02/2004
56,125	Caledonza Two (State)	Andrews, SC	12/03/2004	12/02/2004
56,126	Teleflex Automotive, Inc. (State)	Waterbury, CT	12/03/2004	12/01/2004
56,127	Standard Corporation A Uti Worldwide Co. (State)	Kinston, NC	12/03/2004	11/22/2004
56,128	UFE, Inc. (State)	River Falls, WI	12/03/2004	11/03/2004
56,129	Dimensions Acquisition LLC (Wkrs)	Woburn, MA	12/03/2004	11/22/2004
56,130	Beacon Looms, Inc. (State)	Teaneck, NJ	12/03/2004	12/01/2004
56,131	Independence Regional Health Center (State)	Independence, MO	12/03/2004	11/24/2004
56,132	Floyd Manufacturing Co., Inc. (Comp)	E. Berlin, CT	12/03/2004	11/15/2004
56,133	Eisenberg International Corp. (State)	San Fernando, CA	12/03/2004	11/09/2004
56,134	Tyco Electronics (Comp)	Watertown, SD	12/03/2004	12/02/2004
56,135	Motorola Inc./Freescale Semiconductor ((Wkrs)	Tempe, AZ	12/03/2004	12/03/2004
56,136	GretagMacbeth, LLC (Comp)	New Windsor, NY	12/03/2004	12/01/2004
56,137	Gates Corporation (Comp)	Galesburg, IL	12/03/2004	12/02/2004
56,138	Money's Foods U.S., Inc. Allegan County (Wkrs)	Fennville, MI	12/03/2004	11/24/2004

[FR Doc. 04–27748 Filed 12–17–04; 8:45 am]

BILLING CODE 4510–30–M

DEPARTMENT OF LABOR

Employment And Training Administration

[TA–W–55,656]

Bombardier Transporation, A Subsidiary Of Bombardier, Inc., Propulsion Division, Pittsburgh, PA; Amended Certification Regarding Eligibility To Apply for Worker Adjustment Assistance

In accordance with Section 223 of the Trade Act of 1974 (19 U.S.C. 2273), as amended, the Department of Labor issued a Certification of Eligibility to Apply for Worker Adjustment Assistance on November 1, 2004, applicable to workers of Bombardier Transportation, a subsidiary of Bombardier, Inc., Propulsion Division, Pittsburgh, Pennsylvania. The notice will be published soon in the **Federal Register**.

At the request of the State agency, the Department reviewed the certification for workers of the subject firm. The workers are engaged in the production of propulsion equipment.

New information shows that there was a previous certification, TA–W–41,025, issued on June 21, 2002, for workers of Bombardier Transportation, a subsidiary of Bombardier, Inc., Propulsion Division, Pittsburgh, Pennsylvania who were engaged in employment related to the production of propulsion equipment. That certification expired June 21, 2004. To avoid an overlap in worker group coverage, the certification is being amended to change the impact date from September 8, 2003 to June 22, 2004, for workers of the subject firm.

The amended notice applicable to TA–W–55,656 is hereby issued as follows:

''All workers of Bombardier Transportation, a subsidiary of Bombardier, Inc., Propulsion Division, Pittsburgh, Pennsylvania (TA–W–55,656), who became totally or partially separated from employment on or after June 22, 2004, through November 1, 2006, are eligible to apply for adjustment assistance under Section 223 of the Trade Act of 1974.''

Signed in Washington, DC this 7th day of December 2004.

Linda G. Poole,

Certifying Officer, Division of Trade Adjustment Assistance.

[FR Doc. E4–3736 Filed 12–17–04; 8:45 am]

BILLING CODE 4510–30–P

DEPARTMENT OF LABOR

Employment and Training Administration

[TA–W–55,528]

Drager Medical; A Division Of Dragerwerk AG; Telford, PA; Dismissal of Application for Reconsideration

Pursuant to 29 CFR 90.18(C) an application for administrative reconsideration was filed with the Director of the Division of Trade Adjustment Assistance for workers at Drager Medical, a Division of Dragerwerk AG, Telford, Pennsylvania.

The application contained no new substantial information which would bear importantly on the Department's determination. Therefore, dismissal of the application was issued.

TA–W–55,528; Drager Medical; A Division of Dragerwerk AG; Telford, Pennsylvania (December 8, 2004)

Signed at Washington, DC this 13th day of December 2004.

Timothy Sullivan,

Director, Division of Trade Adjustment Assistance.

[FR Doc. E4–3740 Filed 12–17–04; 8:45 am]

BILLING CODE 4510–30–P

DEPARTMENT OF LABOR

Employment and Training Administration

[TA–W–55,636]

Fleetguard Corporation, Subsidiary of Cummins Corporation, Cookeville, Tennessee; Notice of Revised Determination of Alternative Trade Adjustment Assistance on Reconsideration

On November 18, 2004, the Department of Labor issued a Notice of Affirmative Determination Regarding Application for Reconsideration for workers of the subject firm. The Notice will soon be published in the **Federal Register**.

The initial investigation determined that the subject worker group possesses skills that are easily transferable to another position in the local commuting area.

The reconsideration investigation has revealed that the workers do not possess skills that are easily transferable to another position in the local commuting area.

At least five percent of the workforce at the subject firm is at least fifty years of age. Competitive conditions within the industry are adverse.

Conclusion

After careful review of the additional facts obtained on reconsideration, I conclude that the requirements of Section 246 of the Trade Act of 1974, as amended, have been met for workers at the subject firm.

In accordance with the provisions of the Act, I make the following certification:

''All workers at Fleetguard Corporation, Subsidiary of Cummins Corporation, Cookeville, Tennessee, who became totally or partially separated from employment on or after September 15, 2003 through October 22, 2006, are eligible to apply for adjustment assistance under Section 223 of the Trade Act of 1974, and are also eligible to apply for alternative trade adjustment assistance under Section 246 of the Trade Act of 1974.''

Signed in Washington, DC this 6th day of December 2004.

Elliott S. Kushner,

Certifying Officer, Division of Trade Adjustment Assistance.

[FR Doc. E4–3737 Filed 12–17–04; 8:45 am]

BILLING CODE 4510–30–P

DEPARTMENT OF LABOR

Employment and Training Administration

[TA–W–55,670]

Hartford Technologies Company Formerly Known as Hartford Ball/Hartford Bearing, Subsidiary of Virginia Industries, Inc., Rocky Hill, CT; Amended Certification Regarding Eligibility To Apply for Worker Adjustment Assistance and Alternative Trade Adjustment Assistance

In accordance with Section 223 of the Trade Act of 1974 (19 U.S.C. 2273), and under Section 246 of the Trade Act of 1974, as amended, the Department of Labor issued a Certification of Eligibility to Apply for Worker Adjustment Assistance and Alternative Trade Adjustment Assistance on November 17, 2004, applicable to workers of Hartford Technologies Company, subsidiary of Virginia Industries, Inc., located in Rocky Hill, Connecticut. The notice will soon be published in the **Federal Register**.

At the request of the State Agency, the Department reviewed the certification for workers of the subject firm. The workers produce balls and bearings.

New information provided by the State agency shows that the same worker group was certified eligible to apply for trade adjustment assistance, petition number TA–W–41,960, under the firm name, Hartford Ball/Hartford Bearing, subsidiary of Virginia Industries, Inc. The certification was issued on September 18, 2002, and expired September 18, 2004.

The subdivision is now known as Hartford Technologies. In order to avoid an overlap in worker group coverage, the Department is changing the impact date for TA–W–55,670, from September 22, 2003 to September 19, 2004.

The amended notice applicable to TA–W–55,670 is hereby issued as follows:

''All workers of Hartford Technologies Company, formerly known as Hartford Ball/Hartford Bearing, subsidiary of Virginia Industries, Inc., Rocky Hill, Connecticut, who became totally or partially separated from employment on or after September 19, 2004, through November 17, 2006, are eligible to apply for adjustment assistance under Section 223 of the Trade Act of 1974, and are also eligible to apply for alternative trade adjustment assistance under Section 246 of the Trade Act of 1974.''

Signed at Washington, DC, this 6th day of December 2004.

Linda G. Poole,

Certifying Officer, Division of Trade Adjustment Assistance.

[FR Doc. E4–3733 Filed 12–17–04; 8:45 am]

BILLING CODE 4510–30–P

DEPARTMENT OF LABOR

Employment And Training Administration

[TA–W–55,408]

Kokoku Wire Industries, South Bend, Indiana; Notice of Affirmative Determination Regarding Application for Reconsideration

By application of October 28, 2004, 2004, a petitioner requested administrative reconsideration of the Department's Notice of Negative Determination Regarding Eligibility to Apply for Worker Adjustment Assistance, applicable to workers of the subject firm. The denial was signed on September 20, 2004. The Notice of determination was published in the **Federal Register** on October 26, 2004 (69 FR 62460).

The petitioner alleges in the request for reconsideration that the Department's investigation was not complete.

The Department reviewed the request for reconsideration and will conduct further investigation to determine if the workers meet the eligibility requirements of the Trade Act of 1974.

Conclusion

After careful review of the application, I conclude that the claim is of sufficient weight to justify reconsideration of the Department of Labor's prior decision. The application is, therefore, granted.

Signed at Washington, DC, this 7th day of December 2004.

Elliott S. Kushner,

Certifying Officer, Division of Trade Adjustment Assistance.

[FR Doc. E4–3734 Filed 12–17–04; 8:45 am]

BILLING CODE 4310–30–P

DEPARTMENT OF LABOR

Employment And Training Administration

[TA–W–51,657 and TA–W–51,657A]

Lucent Technologies, North Andover, MA; Including Employees Of Lucent Technologies North Andover, MA, Located In Westford, MA; Amended Certification Regarding Eligibility to Apply for Worker Adjustment Assistance

In accordance with Section 223 of the Trade Act of 1974 (19 U.S.C. 2273) the Department of Labor issued a Certification of Eligibility to Apply for Worker Adjustment Assistance on June 30, 2003, applicable to workers of Lucent Technologies, North Andover, Massachusetts. The notice was published in the **Federal Register** on July 22, 2003 (68 FR 43373).

At the request of the State agency, the Department reviewed the certification for workers of the subject firm. The workers are engaged in the production of printed circuit boards.

New information shows that in early 2004, Lucent Technologies located in North Andover, Massachusetts, relocated several organization units to Westford, Massachusetts.

Accordingly, the Department is amending this certification to include employees of the North Andover, Massachusetts location of Lucent Technologies, located in Westford, Massachusetts.

The intent of the Department's certification is to include all workers employed at Lucent Technologies, North Andover, Massachusetts who were adversely affected by increased imports.

The amended notice applicable to TA–W–51,657 is hereby issued as follows:

''All workers of Lucent Technologies, North Andover, Massachusetts (TA–W–51,657) including employees of Lucent Technologies, North Andover, Massachusetts located in Westford, Massachusetts (TA–W–51,657A), who became totally or partially separated from employment on or after May 1, 2002, through June 30, 2005, are eligible to apply for adjustment assistance under Section 223 of the Trade Act of 1974.''

Signed at Washington, DC this 3rd day of December 2004.

Richard Church,

Certifying Officer, Division of Trade Adjustment Assistance.

[FR Doc. E4–3735 Filed 12–17–04; 8:45 am]

BILLING CODE 4510–30–P

DEPARTMENT OF LABOR

Employment and Training Administration

[TA–W–55,756]

Inmed Corporation d/b/a Rusch Including Leased Workers of Axiom, Partners in Staffing and Davis Company, Duluth, GA; Amended Certification Regarding Eligibility To Apply for Worker Adjustment Assistance and Negative Determination Regarding Eligibility To Apply for Alternative Trade Adjustment Assistance

In accordance with Section 223 of the Trade Act of 1974 (19 U.S.C. 2273) the Department of Labor issued a Certification of Eligibility to Apply for Worker Adjustment Assistance on October 20, 2004, applicable to workers of Inmed Corporation, d/b/a Rusch, including leased workers of Axiom and Partners in Staffing, Duluth, Georgia. The notice was published in the **Federal Register** on November 12, 2004. (69 FR 65463).

At the request of a company official, the Department reviewed the certification for workers of the subject firm. New information shows that leased workers of Davis Company were employed at Inmed Corporation, d/b/a Rusch, at the Duluth, Georgia location of the subject firm.

Based on these finding, the Department is amending this certification to include leased workers of Davis Company working at Inmed Corporation, d/b/a Rusch, Duluth, Georgia.

The intent of the Department's certification is to include all workers employed at Inmed Corporation, d/b/a Rusch, Duluth, Georgia, who were adversely affect by a shift in production to Mexico.

The amended notice applicable to TA–W–55,756 is hereby issued as follows:

''All workers of Inmed Corporation, d/b/a Rusch, including leased workers of Axiom, Partners in Staffing and Davis Company, Duluth, Georgia, who became totally or partially separated from employment on or after October 7, 2003 through October 20, 2006, are eligible to apply for adjustment assistance under Section 223 of the Trade Act of 1974, and are also eligible to apply for Alternative Trade Adjustment Assistance under Section 246 of the Trade Act of 1974,''

I further determine that all workers of Inmed Corporation, d/b/a Rusch, including leased workers of Axiom, Partners in Staffing and Davis Company, Duluth, Georgia, are denied eligibility to apply for alternative trade adjustment assistance under Section 246 of the Trade Act of 1974, as amended.

Signed in Washington, DC, this 3rd day of December 2004.

Richard Church,

Certifying Officer, Division of Trade Adjustment Assistance.

[FR Doc. E4–3732 Filed 12–17–04; 8:45 am]

BILLING CODE 4510–30–P

DEPARTMENT OF LABOR

Employment and Training Administration

[TA–W–55,495]

Tesco Technologies, LLC, Headquarters Office, Auburn Hills, Michigan; Notice of Affirmative Determination Regarding Application for Reconsideration

By application of October 22, 2004, a petitioner requested administrative reconsideration of the Department's Notice of Negative Determination Regarding Eligibility to Apply for Worker Adjustment Assistance, applicable to workers of the subject firm. The negative determination was signed on September 27, 2004. The Notice of Determination was published in the **Federal Register** on October 26, 2004 (69 FR 62460).

The petitioner alleges in the request for reconsideration that designs are a product and that the initial investigation should have inquired about customers' shift of production abroad.

The Department has carefully reviewed the petitioner's request for reconsideration and has determined that further investigation will be conducted to address factual discrepancies.

Conclusion

After careful review of the application, I conclude that the claim is of sufficient weight to justify reconsideration of the Department of Labor's prior decision. The application is, therefore, granted.

Signed at Washington, DC, this 7th day of December 2004.

Elliott S. Kushner,

Certifying Officer, Division of Trade Adjustment Assistance.

[FR Doc. E4–3738 Filed 12–17–04; 8:45 am]

BILLING CODE 4510–30–P

NATIONAL FOUNDATION ON THE ARTS AND THE HUMANITIES

National Endowment for the Arts; Arts Advisory Panel

Pursuant to section 10(a)(2) of the Federal Advisory Committee Act (Pub. L. 92–463), as amended, notice is hereby

given that a meeting of the Arts Advisory Panel, Partnerships section (Regional Partnership Agreements category) to the National Council on the Arts will be held by teleconference from 2:30 p.m. to 3:30 p.m. EST on January 25, 2005 from Room 710 at the Nancy Hanks Center, 1100 Pennsylvania Avenue, NW., Washington, DC 20506. This meeting will be open.

Any person may observe meetings, or portions thereof, of advisory panels that are open to the public, and if time allows, may be permitted to participate in the panel's discussions at the discretion of the panel chairman.

If you need special accommodations due to a disability, please contact the Office of AccessAbility, National Endowment for the Arts, 1100 Pennsylvania Avenue, NW., Washington, DC 20506, (202) 682–5532, TDY–TDD (202) 682–5496, at least seven (7) days prior to the meeting.

Further information with reference to this meeting can be obtained from Ms. Kathy Plowitz-Worden, Office of Guidelines & Panel Operations, National Endowment for the Arts, Washington, DC 20506, or call (202) 682–5691.

Dated: December 14, 2004.

Kathy Plowitz-Worden,

Panel Coordinator, Panel Operations, National Endowment for the Arts.

[FR Doc. 04–27745 Filed 12–17–04; 8:45 am]

BILLING CODE 7537–01–P

NATIONAL FOUNDATION ON THE ARTS AND THE HUMANITIES

National Endowment for the Arts; Arts Advisory Panel

Pursuant to section 10(a)(2) of the Federal Advisory Committee Act (Pub. L. 92–463), as amended, notice is hereby given that a meeting of the Arts Advisory Panel, Museums section (Access to Artistic Excellence category) to the National Council on the Arts will be held by teleconference from 1:30 p.m. to 2:30 p.m. EST on January 12, 2005 from Room 728 at the Nancy Hanks Center, 1100 Pennsylvania Avenue, NW., Washington, DC 20506. This meeting will be closed.

This meeting is for the purpose of Panel review, discussion, evaluation, and recommendations on financial assistance under the National Foundation on the Arts and the Humanities Act of 1965, as amended, including information given in confidence to the agency. In accordance with the determination of the Chairman of April 30, 2003, these sessions will be closed to the public pursuant to subsection (c)(6) of section 552b of Title 5, United States Code.

Further information with reference to this meeting can be obtained from Ms. Kathy Plowitz-Worden, Office of Guidelines & Panel Operations, National Endowment for the Arts, Washington, DC 20506, or call (202) 682–5691.

Dated: December 9, 2004.

Kathy Plowitz-Worden,

Panel Coordinator, Panel Operations, National Endowment for the Arts.

[FR Doc. 04–27746 Filed 12–17–04; 8:45 am]

BILLING CODE 7537–01–P

NATIONAL SCIENCE FOUNDATION

Notice of Permits Issued Under the Antarctic Conservation Act of 1978

AGENCY: National Science Foundation.

ACTION: Notice of permits issued under the Antarctic Conservation of 1978, Pub. L. 95–541.

SUMMARY: The National Science Foundation (NSF) is required to publish notice of permits issued under the Antarctic Conservation Act of 1978. This is the required notice.

FOR FURTHER INFORMATION CONTACT: Nadene G. Kennedy, Permit Office, Office of Polar Programs, Rm. 755, National Science Foundation, 4201 Wilson Boulevard, Arlington, VA 22230.

SUPPLEMENTARY INFORMATION: On August 9, 2004, the National Science Foundation published a notice in the **Federal Register** of a permit application received. The permit was issued on December 14, 2004 to: Rennie S. Holt; Permit No. 2005–013.

Nadene G. Kennedy,

Permit Officer.

[FR Doc. 04–27761 Filed 12–17–04; 8:45 am]

BILLING CODE 7555–01–M

NATIONAL SCIENCE FOUNDATION

Notice of Permit Applications Received Under the Antarctic Conservation Act of 1978 (Public Law 95–541)

AGENCY: National Science Foundation

ACTION: Notice of Permit Modification Received under the Antarctic Conservation Act of 1978, Public law 95–541.

SUMMARY: National Science Foundation (NSF) is required to publish a notice of requests to modify permits issued to conduct activities regulated under the Antarctic Conservation Act of 1978. NSF has published regulations under the Antarctic Conservation Act at title 45 part 670 of the Code of Federal Regulations. This is the required notice of a requested permit modification.

DATES: Interested parties are invited to submit written data, comments, or views with respect to this permit application by January 19, 2004. Permit applications may be inspected by interested parties at the Permit Office, address below.

ADDRESSES: Comments should be addressed to Permit Office, Room 755, Office of Polar Programs, National Science Foundation, 4201 Wilson Boulevard, Arlington, Virginia 22230.

FOR FURTHER INFORMATION CONTACT: Nadene G. Kennedy at the above address or (703) 292–7405.

SUPPLEMENTARY INFORMATION: The National Science Foundation, as directed by the Antarctic Conservation Act of 1978 (Pub. L. 95–541), as amended by the Antarctic Science, Tourism and Conservation Act of 1996, has developed regulations for the establishment of a permit system for various activities in Antarctica and designation of certain animals and certain geographic areas as requiring special protection. The regulations establish such a permit system to designate Antarctic Specially Protected Areas.

Description of Permit Modification Requested: The Foundation issued a permit (2000–001) to Dr. Steven Emslie on September 21, 1999. The issued permit allows the applicant to enter various Antarctic Specially Protected Areas on an opportunistic basis to conduct surveys and excavate modern and abandoned penguin colonies. The permit also allows for the collection of organic remains (bones, feathers, eggshell fragments, etc.).

The applicant requests a modification to his permit to allow access to the Antarctic Specially Protected Area at Cape Adare (ASPA #158) and associated huts and artifacts to collect historic penguin tissue.

Location: ASPA 158—Huts and Associated Artifacts, Cape Adare.

Dates: January 1, 2005, to January 31, 2005.

Nadene G. Kennedy,

Permit Officer, Office of Polar Programs.

[FR Doc. 04–27762 Filed 12–17–04; 8:45 am]

BILLING CODE 7555–01–M

NUCLEAR REGULATORY COMMISSION

[Docket No. 030–35321, License No. 11–27657–01, EA–03–128]

In the Matter of All Tech Corporation Pocatello, Idaho; Order Imposing Civil Monetary Penalty

All Tech Corporation (Licensee) is the holder of Byproduct Material License No. 11–27657–01 issued by the Nuclear Regulatory Commission (NRC or Commission) on March 6, 2000. The license authorizes the Licensee to use and possess portable gauging devices in accordance with the conditions specified therein.

An investigation of the Licensee's activities was initiated on March 18, 2003. The investigation concluded that the Licensee had not conducted its activities in full compliance with NRC requirements. The results of the investigation were discussed with the Licensee during a predecisional enforcement conference on September 15, 2003. A written Notice of Violation and Proposed Imposition of Civil Penalty (Notice) was served upon the Licensee by letter dated April 27, 2004. The Notice stated the nature of the violation, the provision of the NRC's requirements that the Licensee had violated, and the amount of the civil penalty proposed for the violation.

The Licensee responded to the Notice in a letter dated June 2, 2004. In its response, the Licensee denied the violation in whole and requested remission or mitigation of the civil penalty.

After consideration of the Licensee's response and the statements of fact, explanation, and argument for mitigation contained therein, the NRC staff has determined that the violation occurred as stated and that the penalty proposed for the violation designated in the Notice should be imposed.

In view of the foregoing and pursuant to Section 234 of the Atomic Energy Act of 1954, as amended (Act), 42 U.S.C. 2282, and 10 CFR 2.205, *It is hereby ordered that:*

The Licensee pay a civil penalty in the amount of $6,000 within 30 days of the date of this Order, in accordance with NUREG/BR–0254. In addition, at the time of making the payment, the licensee shall submit a statement indicating when and by what method payment was made, to the Director, Office of Enforcement, U.S. Nuclear Regulatory Commission, One White Flint North, 11555 Rockville Pike, Rockville, MD 20852–2738.

The Licensee may request a hearing within 30 days of the date of this Order. Where good cause is shown, consideration will be given to extending the time to request a hearing. A request for extension of time must be made in writing to the Director, Office of Enforcement, U.S. Nuclear Regulatory Commission, Washington, DC 20555, and include a statement of good cause for the extension. A request for a hearing should be clearly marked as a ''Request for an Enforcement Hearing'' and shall be submitted to the Secretary, U.S. Nuclear Regulatory Commission, ATTN: Rulemakings and Adjudications Staff, Washington, DC 20555. Copies also shall be sent to the Director, Office of Enforcement, U.S. Nuclear Regulatory Commission, Washington, DC 20555, to the Assistant General Counsel for Materials Litigation and Enforcement at the same address, and to the Regional Administrator, NRC Region IV, 611 Ryan Plaza Drive, Suite 400, Arlington, Texas 76011. Because of continuing disruptions in delivery of mail to United States Government offices, it is requested that requests for hearing be transmitted to the Secretary of the Commission either by means of facsimile transmission to 301–415–1101 or by e-mail to *hearingdocket@nrc.gov* and also to the Office of the General Counsel either by means of facsimile transmission to 301–415–3725 or by e-mail to *OGCMailCenter@nrc.gov.*

If a hearing is requested, the Commission will issue an Order designating the time and place of the hearing. If the Licensee fails to request a hearing within 30 days of the date of this Order (or if written approval of an extension of time in which to request a hearing has not been granted), the provisions of this Order shall be effective without further proceedings. If payment has not been made by that time, the matter may be referred to the Attorney General for collection.

In the event the Licensee requests a hearing as provided above, the issues to be considered at such hearing shall be:

(a) Whether the Licensee was in violation of the Commission's requirements as set forth in the Notice referenced in Section II above, and

(b) Whether, on the basis of such violation, this Order should be sustained.

Dated this 10th day of December 2004.

For the Nuclear Regulatory Commission.

Frank Congel,

Director, Office of Enforcement.

[FR Doc. 04–27731 Filed 12–17–04; 8:45 am]

BILLING CODE 7590–01–P

NUCLEAR REGULATORY COMMISSION

[Docket Nos. 50–498 AND 50–499]

STP Nuclear Operating Company, et al., South Texas Project, Units 1 and 2; Notice of Consideration of Approval of Application Transfer of Facility Operating Licenses and Conforming Amendments and Opportunity for a Hearing

The U.S. Nuclear Regulatory Commission (NRC or the Commission) is considering issuance of an order under Section 50.80 of Title 10 of the Code of Federal Regulations (10 CFR), approving the direct transfer of Facility Operating License Nos. NPF–76 and NPF–80 for South Texas Project (STP), Units 1 and 2, respectively, to the extent held by AEP Texas Central Company (TCC). The Commission is further considering amending the licenses for administrative purposes to reflect the proposed transfer, including removing references to TCC in the licenses.

The application requests the consent of the NRC to the proposed direct transfer of the STP, Units 1 and 2, licenses to the extent held by TCC by virtue of the direct transfer of TCC's 25.2 percent undivided ownership interest in STP, Units 1 and 2 (TCC's ownership interest in STP) to STP co-owners Texas Genco, LP (Texas Genco) and/or City Public Service Board of San Antonio (CPS). According to the application, it is currently anticipated that the following proportionate shares of TCC's ownership interest in STP will be transferred to Texas Genco and CPS: a 13.2 percent undivided ownership interest to Texas Genco and a 12 percent undivided ownership interest to CPS. If, however, the transfer to either Texas Genco or CPS fails to take place, the party whose transfer has not failed to take place will be obligated, subject to the terms and conditions of a September 3, 2004, Purchase and Sale Agreement between TCC, CPS, and Texas Genco (Purchase and Sale Agreement), to purchase all of TCC's ownership interest in STP.

(In a separate but parallel action, an October 12, 2004, application requests the consent of the NRC to the proposed indirect transfer of control of the STP, Units 1 and 2, licenses to the extent held by Texas Genco by virtue of the transfer of ownership of approximately 81 percent of the stock of Texas Genco's indirect parent company, Texas Genco Holdings Inc. (TGN), from CenterPoint Energy, Inc., (CenterPoint Energy) to GC Power Acquisitions, LLC (GC Power). Texas Genco is an indirect subsidiary of TGN and TGN is an indirect subsidiary

of CenterPoint Energy. The transaction would result in the indirect transfer of control of Texas Genco's 30.8 percent undivided ownership interest in STP, Units 1 and 2, or greater interest if the direct transfer described herein, to Texas Genco, has been consummated. In addition to its 30.8 percent undivided ownership interest in STP, Units 1 and 2, Texas Genco holds a corresponding 30.8 percent interest in STP Nuclear Operating Company (STPNOC), a not-for-profit Texas corporation, which is the licensed operator of STP, Units 1 and 2. The application further requests, as necessary, approval of the indirect transfer of control of this 30.8 percent interest in STPNOC, to the extent such indirect transfer would result in an indirect transfer of the licenses as held by STPNOC, thereby requiring NRC approval.)

Pursuant to 10 CFR 50.80, no license shall be transferred, directly or indirectly, through transfer of control of the license, unless the Commission gives its consent in writing. The Commission will approve an application for the direct transfer of a license if the Commission determines that the proposed transferee is qualified to hold the license, and that the transfer is otherwise consistent with applicable provisions of law, regulations, and orders issued by the Commission pursuant thereto.

As provided in 10 CFR 2.1315, unless otherwise determined by the Commission with regard to a specific application, the Commission has determined that any amendment to the license of a utilization facility which does no more than conform the license to reflect the transfer action, involves no significant hazards consideration. No contrary determination has been made with respect to this specific license amendment application. In light of the generic determination reflected in 10 CFR 2.1315, no public comments with respect to significant hazards considerations are being solicited, notwithstanding the general comment procedures contained in 10 CFR 50.91.

The filing of requests for hearing and petitions for leave to intervene with regard to the license transfer application, are discussed below.

Within 20 days after the date of publication of this notice, the licensee may file a request for a hearing with respect to issuance of the amendment to the subject facility operating license and any person whose interest may be affected by this proceeding and who wishes to participate as a party in the proceeding must file a written request for a hearing and a petition for leave to intervene. Requests for a hearing and petitions for leave to intervene shall be filed in accordance with the Commission's rules of practice set forth in subpart M, ''Hearing Requests and Procedures for Hearings on License Transfer Applications,'' of 10 CFR part 2. Interested persons should consult a current copy of 10 CFR 2.309, which is available at the Commission's Public Document Room (PDR), located at One White Flint North, Public File Area 01F21, 11555 Rockville Pike (first floor), Rockville, Maryland. Publicly available records will be accessible from the Agencywide Documents Access and Management System's (ADAMS) Public Electronic Reading Room on the Internet at the NRC Web site, *http://www.nrc.gov/reading-rm/doc-collections/cfr/*. If a request for a hearing or petition for leave to intervene is filed within 20 days after the date of publication of this notice, the Commission or a presiding officer designated by the Commission or by the Chief Administrative Judge of the Atomic Safety and Licensing Board Panel, will rule on the request and/or petition; and the Secretary or the Chief Administrative Judge of the Atomic Safety and Licensing Board will issue a notice of a hearing or an appropriate order.

As required by 10 CFR 2.309, a petition for leave to intervene shall set forth with particularity the interest of the petitioner in the proceeding, and how that interest may be affected by the results of the proceeding. The petition should specifically explain the reasons why intervention should be permitted with particular reference to the following general requirements: (1) The name, address and telephone number of the requestor or petitioner; (2) the nature of the requestor's/petitioner's right under the Act to be made a party to the proceeding; (3) the nature and extent of the requestor's/petitioner's property, financial, or other interest in the proceeding; and (4) the possible effect of any decision or order which may be entered in the proceeding on the requestors/petitioner's interest. The petition must also identify the specific contentions which the petitioner/requestor seeks to have litigated at the proceeding.

Each contention must consist of a specific statement of the issue of law or fact to be raised or controverted. In addition, the petitioner/requestor shall: (1) Provide a brief explanation of the bases for the contention; (2) Demonstrate that the issue raised in the contention is within the scope of the proceeding; (3) Demonstrate that the issue raised in the contention is material to the findings the NRC must make to support the action that is involved in the proceeding; and (5) Provide a concise statement of the alleged facts or expert opinion which support the contention and on which the petitioner/requestor intends to rely in proving the contention at the hearing. The petitioner/requestor must also provide references to those specific sources and documents of which the petitioner/requestor is aware and on which the petitioner intends to rely to establish those facts or expert opinion. The petition must include sufficient information to show that a genuine dispute exists with the applicant on a material issue of law or fact. The contention must be one which, if proven, would entitle the petitioner/requestor to relief. A petitioner/requestor who fails to satisfy these requirements with respect to at least one contention will not be permitted to participate as a party.

Those permitted to intervene become parties to the proceeding, subject to any limitations in the order granting leave to intervene, and have the opportunity to participate fully in the conduct of the hearing.

Nontimely requests and/or petitions and contentions will not be entertained absent a determination by the Commission or the presiding officer of the Atomic Safety and Licensing Board that the petition, request and/or the contentions should be granted based on a balancing of the factors specified in 10 CFR 2.309(a)(1)(i)–(viii).

A request for a hearing or a petition for leave to intervene must be filed by: (1) First class mail addressed to the Office of the Secretary of the Commission, U.S. Nuclear Regulatory Commission, Washington, DC 20555–0001, Attention: Rulemaking and Adjudications Staff; (2) courier, express mail, and expedited delivery services: Office of the Secretary, Sixteenth Floor, One White Flint North, 11555 Rockville Pike, Rockville, Maryland, 20852, Attention: Rulemaking and Adjudications Staff; (3) E-mail addressed to the Office of the Secretary, U.S. Nuclear Regulatory Commission, *HEARINGDOCKET@NRC.GOV*; or (4) facsimile transmission addressed to the Office of the Secretary, U.S. Nuclear Regulatory Commission, Washington, DC, Attention: Rulemakings and Adjudications Staff at (301) 415–1101, verification number is (301) 415–1966. A copy of the request for hearing and petition for leave to intervene should also be sent to the Office of the General Counsel, U.S. Nuclear Regulatory Commission, Washington, DC 20555–0001, and it is requested that copies be transmitted either by means of facsimile

transmission to 301–415–3725 or by email to *OGCMailCenter@nrc.gov.* A copy of the request for hearing and petition for leave to intervene should also be sent to Mr. John E. Matthews, Morgan, Lewis, & Bockius, LLP, 1111 Pennsylvania Avenue, NW, Washington, DC 20004, attorney for the licensee.

The Commission will issue a notice or order granting or denying a hearing request or intervention petition, designating the issues for any hearing that will be held, and designating the presiding officer. A notice granting a hearing will be published in the **Federal Register** and served on the parties to the hearing.

For further details with respect to this action, see the application dated October 12, 2004, of which, a nonproprietary version is available for public inspection at the Commission's PDR, located at One White Flint North, Public File Area 01 F21, 11555 Rockville Pike (first floor), Rockville, Maryland, and accessible electronically through the Agencywide Documents Access and Management System (ADAMS) Public Electronic Reading Room on the Internet at the NRC Web site, *http://www.nrc.gov/reading-rm/adams/html.* Persons who don't have access to ADAMS or who encounter problems accessing the documents located in ADAMS, should contact the NRC PDR Reference staff by telephone at 1–800–397–4209, 301–415–4737, or by e-mail to *pdr@nrc.gov.*

Dated at Rockville, Maryland this 14th day of December 2004.

For the Nuclear Regulatory Commission.

David H. Jaffe,

Senior Project Manager, Section 1, Project Directorate IV, Division of Licensing Project Management, Office of Nuclear Reactor Regulation.

[FR Doc. 04–27732 Filed 12–17–04; 8:45 am]

BILLING CODE 7590–01–P

NUCLEAR REGULATORY COMMISSION

Advisory Committee on Reactor Safeguards; Renewal

AGENCY: U.S. Nuclear Regulatory Commission.

ACTION: Notice of renewal of the Charter of the Advisory Committee on Reactor Safeguards (ACRS).

SUMMARY: The Advisory Committee on Reactor Safeguards was established by Section 29 of the Atomic Energy Act (AEA) in 1954. Its purpose is to provide advice to the Commission with regard to the hazards of proposed or existing reactor facilities, to review each application for a construction permit or operating license for certain facilities specified in the AEA, and such other duties as the Commission may request. The AEA as amended by PL 100–456 also specifies that the Defense Nuclear Safety Board may obtain the advice and recommendations of the ACRS.

Membership on the Committee includes individuals experienced in reactor operations, management; probabilistic risk assessment; analysis of reactor accident phenomena; design of nuclear power plant structures, systems and components; materials science; and mechanical, civil, and electrical engineering.

The Nuclear Regulatory Commission has determined that renewal of the charter for the ACRS until December 14, 2006 is in the public interest in connection with the statutory responsibilities assigned to the ACRS. This action is being taken in accordance with the Federal Advisory Committee Act.

FOR FURTHER INFORMATION CONTACT: Andrew L. Bates, Office of the Secretary, NRC, Washington, DC 20555; telephone: (301) 415–1963.

Dated: December 14, 2004.

Andrew L. Bates,

Advisory Committee Management Officer.

[FR Doc. 04–27733 Filed 12–17–04; 8:45 am]

BILLING CODE 7590–01–P

NUCLEAR REGULATORY COMMISSION

Sunshine Federal Register Notice

DATES: Weeks of December 20, 27, 2004, January 3, 10, 17, 24, 2005.

PLACE: Commissioners' Conference Room, 11555 Rockville Pike, Rockville, Maryland.

STATUS: Public and closed.

MATTERS TO BE CONSIDERED:

Week of December 20, 2004

There are no meetings scheduled for the week of December 20, 2004.

Week of December 27, 2004—Tentative

There are no meetings scheduled for the week of December 27, 2004.

Week of January 3, 2005—Tentative

Wednesday, January 5, 2005

2 p.m. Affirmation Session (Public Meeting) (Tentative).

a. Private Fuel Storage (Independent Spent Fuel Storage Installation); Docket No. 72–22–ISFSI (Tentative).

Week of January 10, 2005—Tentative

Tuesday, January 11, 2005

9:30 a.m. Discussion of Security Issues (Closed—Ex. 1 & 9).

Week of January 17, 2005—Tentative

There are no meetings scheduled for the week of January 17, 2005.

Week of January 24, 2005—Tentative

Monday, January 24, 2005

9:30 a.m. Discussion of Security Issues (Closed—Ex. 1).

1:30 p.m. Briefing on Human Capital Initiatives (Closed—Ex. 2).

Tuesday, January 25, 2005

9:30 a.m. Discussion of Security Issues (Closed—Ex. 1).

* The Schedule for Commission meetings is subject to change on short notice. To verify the status of meetings call (recording)—(301) 415–1292. Contact person for more information: Dave Gamberoni, (301) 415–1651.

* * * * *

SUPPLEMENTARY INFORMATION: By a vote of 3–0 on December 9 and 10, the Commission determined pursuant to U.S.C. 552b(e) and § 9.107(a) of the Commission's rules that ''Affirmation of (a) HYDRO RESOURCES, INC. Petition for Review of LBP–04–23 (Final Environmental Impact Statement Supplementation), (b) STATE OF ALASKA DEPARTMENT OF TRANSPORTATION AND PUBLIC FACILITIES (Confirmatory Order Modifying License); Intervenor's Motion for Reconsideration of CLI–04–26, and (c) Final Amendments to 10 CFR Part 50, Appendix E, Relating to (1) Nuclear Regulatory Commission Review of Changes to Emergency Action Levels, Paragraph IV.B and (2) Exercise Requirements for Co-Located Licensees, Paragraph IV.F.2'' be held December 14, and on less than one week's notice to the public.

* * * * *

The NRC Commission Meeting Schedule can be found on the Internet at: *http://www.nrc.gov/what-we-do/policy-making/schedule.html.*

* * * * *

The NRC provides reasonable accommodation to individuals with disabilities where appropriate. If you need a reasonable accommodation to participate in these public meetings, or need this meeting notice or the transcript or other information from the public meetings in another format (*e.g.*, braille, large print), please notify the NRC's Disability Program Coordinator, August Spector, at (301) 415–7080, TDD: (301) 415–2100, or by e-mail at

aks@nrc.gov. Determinations on requests for reasonable accommodation will be made on a case-by-case basis.

* * * * *

This notice is distributed by mail to several hundred subscribers; if you no longer wish to receive it, or would like to be added to the distribution, please contact the Office of the Secretary, Washington, DC 20555 (301) 415–1969). In addition, distribution of this meeting notice over the Internet system is available. If you are interested in receiving this Commission meeting schedule electronically, please send an electronic message to *dkw@nrc.gov.*

Dated: December 15, 2004.

Dave Gamberoni,

Office of the Secretary.

[FR Doc. 04–27843 Filed 12–16–04; 9:38 am]

BILLING CODE 7590–01–M

SECURITIES AND EXCHANGE COMMISSION

[Release Nos. 33–8512; 34–50849; IC–26693; File No. S7–12–04]

RIN 3235–AJ16

Disclosure Regarding Portfolio Managers of Registered Management Investment Companies

AGENCY: Securities and Exchange Commission.

ACTION: Notice of OMB approval of collections of information.

FOR FURTHER INFORMATION CONTACT: Sanjay Lamba, Senior Counsel, Office of Disclosure Regulation, Division of Investment Management, (202) 942–7926, at the Securities and Exchange Commission, 450 Fifth Street, NW., Washington, DC 20549–0506.

SUPPLEMENTARY INFORMATION: The Office of Management and Budget has approved the collections of information requirements contained in Disclosure Regarding Portfolio Managers of Registered Management Investment Companies,[1] titled ''Form N–1A under the Investment Company Act of 1940 and Securities Act of 1933, Registration Statement of Open-End Management Investment Companies'' (OMB Control No. 3235–0307) and ''Form N–CSR under the Investment Company Act of 1940 and Securities Exchange Act of 1934, Certified Shareholder Report of Registered Management Investment Companies'' (OMB Control No. 3235–0570).

[1] Investment Company Act Release No. 26533 (August 23, 2004) [69 FR 52788 (August 27, 2004)].

Dated: December 14, 2004.

Margaret H. McFarland,

Deputy Secretary.

[FR Doc. E4–3721 Filed 12–17–04; 8:45 am]

BILLING CODE 8010–01–P

SECURITIES AND EXCHANGE COMMISSION

[Release No. 34–50845; File No. SR–NASD–2004–181]

Self-Regulatory Organizations; Notice of Filing of Proposed Rule Change by National Association of Securities Dealers, Inc. Concerning Modifications to the Nasdaq Market Center Execution Service

December 13, 2004.

Pursuant to Section 19(b)(1) of the Securities Exchange Act of 1934 (''Act''),[1] and Rule 19b–4 thereunder,[2] notice is hereby given that on December 9, 2004, the National Association of Securities Dealers, Inc. (''NASD''), through its subsidiary, The Nasdaq Stock Market, Inc. (''Nasdaq''), filed with the Securities and Exchange Commission (''Commission'') the proposed rule change as described in Items I, II, and III below, which Items have been prepared by Nasdaq. The Commission is publishing this notice to solicit comments on the proposed rule change from interested persons.

I. Self-Regulatory Organization's Statement of the Terms of Substance of the Proposed Rule Change

Nasdaq is filing a proposed rule change to address the time priority issue that has prevented Nasdaq from registering as an exchange under Section 6 of the Act.[3] Specifically, Nasdaq is proposing to eliminate: (1) The ''internalization'' exception to the time priority aspect of the Nasdaq Market Center execution service's price/time priority execution algorithm, (2) Preferenced Orders; and (3) the Directed Order functionality of the service.

Proposed new language is italicized; proposed deletions are in brackets.

4700. NASDAQ MARKET CENTER—EXECUTION SERVICES

4701. Definitions

Unless stated otherwise, the terms described below shall have the following meaning:

(a) through (e) No changes.

(f) *Reserved* [The term ''Directed Order'' shall mean an order in a Nasdaq-listed security that is entered into the system by a Nasdaq Market Center participant that is directed to a particular Quoting Market Participant at any price, through the Directed Order process described in Rule 4710(c). This term shall not include the ''Preferenced Order'' described in subparagraph (aa) of this rule. Directed Orders shall not be available for ITS Securities.]

(g) through (o) No changes.

(p) The term ''Non-Directed Order'' shall mean an order that is entered into the system by a Nasdaq Market Center Participant and is not directed to any particular Quoting Market Participant or ITS Exchange [, and shall also include Preferenced Orders as described in subparagraph (aa) of this rule].

(q) *Reserved* [The term ''Non-Liability Order'' shall mean for Nasdaq listed securities an order that when delivered to a Quoting Market Participant imposes no obligation to respond to such order under the Firm Quote Rule. For ITS Securities, only orders preferenced to an ITS exchange can be non-liability orders.]

(r) through (z) No changes.

(aa) *Reserved* [The term ''Preferenced Order'' shall mean an order that is entered into the Non-Directed Order Process and is designated to be delivered to or executed against a particular Quoting Market Participant's Attributable Quote/Order if the Quoting Market Participant is at the best bid/best offer when the Preferenced Order is the next in line to be executed or delivered. Preferenced Orders shall be executed subject to the conditions set out in Rule 4710(b).]

(bb) through (uu) No changes.

4704. Opening Process for Nasdaq-Listed Securities

(a) No change.

(b) No change.

(1) through (4) No changes.

(5) Notwithstanding subparagraphs (1) through ([5] *4*), if a Nasdaq Quoting Market Participant has entered a Locking/Crossing Quote/Order into the system that would become subject to the automated processing described above, the [system shall, before sending the order to any other Quoting Market Participant or Order Entry Firm, first attempt to match off the order against the locking/crossing Nasdaq Quoting Market Participant's own Quote/Order if that participant's Quote/Order is at the highest bid or lowest offer, as appropriate. A] Nasdaq Quoting Market Participant [may avoid this automatic matching through the] *can* use *the* [of] anti-internalization qualifier as set forth in Rule 4710(b)(1)(B)(ii)(a) *to deviate from time priority.* Order Entry Firms that enter locking/crossing Quotes/

[1] 15 U.S.C. 78s(b)(1).

[2] 17 CFR 240.19b–4.

[3] 15 U.S.C. 78f.

Orders *also can use the anti-internalization qualifier* [shall have those Quotes/Orders processed as set forth in subparagraphs (1) through (4), unless they voluntarily select a ''Y'' AIQ Value] as provided for in Rule 4710 (b)(1)(B)(ii)(a) *to deviate from time priority.*

(c) and (d) No changes.

4706. Order Entry Parameters

(a) Non-Directed Orders—

(1) No change.

(A) No change.

(B) No change.

(i) through (vi) No change

(vii) An order may be designated as ''Pegged,'' in which case the order will also automatically be designated as Day. [A Pegged Order may not be designated as a Preferenced Order.] A Pegged Order (or unexecuted portion thereof) will be retained by the Nasdaq Market Center and its price adjusted in response to changes in the Nasdaq Market Center inside market. A Pegged Order (including a Discretionary Order that is pegged) will be cancelled if there is no displayable Quote/Order to which its price can be pegged. Starting at 7:30 a.m., until the 4 p.m. market close, Pegged Orders may be entered into the Nasdaq Market Center (or previously entered orders cancelled), but such orders entered prior to market open will not become available for execution until 9:30 a.m. Eastern Time. The initial price of Pegged Orders (including Discretionary Orders that are pegged) entered prior to market open will be established at 9:30 a.m. based on the Nasdaq inside bid or offer at that time. Pegged Orders shall not be available for ITS Securities.

To maintain the capacity and performance of the Nasdaq Market Center, Nasdaq may at any time suspend the entry of Pegged Orders (including Discretionary Orders that are pegged) for all securities or for any security. Pegged Orders that are in the Nasdaq Market Center at the time of such suspension will continue to be available for adjustment and execution.

(viii) a. An order may be designated as ''Discretionary'', in which case the order will also automatically be designated as Day. [A Discretionary Order may not be designated as a Preferenced Order.] The order (or unexecuted portion thereof) shall be displayed in the system, if appropriate, using the displayed price selected by the entering party, with the system also retaining a non-displayed discretionary price range within which the entering party is also willing to execute if necessary. If a Discretionary Order is pegged, its displayed price will be adjusted in response to changes in the Nasdaq inside market. Starting at 7:30 a.m., until the 4 p.m. market close, Discretionary Orders may be entered into the Nasdaq Market Center (or previously entered orders cancelled), but such orders entered prior to market open will not become available for execution until 9:30 a.m. Eastern Time. Discretionary Orders whose displayed price or discretionary price range does not lock or cross another Quote/Order will be available for execution at 9:30 a.m. All other Discretionary Orders will be added to the time-priority queue described in Rule 4706(a)(1)(F) and (a)(2)(B) and processed by the Nasdaq Market Center at market open.

b. A Discretionary Order in an ITS Security [may not be preferenced to an ITS/CAES Market Maker or ITS Exchange,] shall not result in a quote that locks or crosses the national best bid and offer and shall not be executed at a price that trades through the quotation of an ITS Exchange unless it is also designated as a Sweep Order. Starting at 7:30 a.m., until the 4 p.m. market close, Discretionary Orders in ITS Securities may be entered into the Nasdaq Market Center (or previously entered orders cancelled), but such orders entered prior to market open will not become available for execution until 9:30 a.m. Eastern Time. Discretionary Orders whose displayed price or discretionary price range does not lock or cross another Quote/Order will be available for execution at 9:30 a.m. All other Discretionary Orders will be added to the time-priority queue described in Rule 4706(a)(1)(F) and (a)(2)(B) and processed by the Nasdaq Market Center at market open.

(ix) through (xiii) No changes.

(C) through (F) No changes.

(2) No change.

(b) *Reserved* [Directed Orders in Nasdaq-listed Securities. A participant may enter a Directed Order in a Nasdaq-listed security into the Nasdaq Market Center to access a specific Attributable Quote/Order displayed in the system, subject to the following conditions and requirements:

(1) Unless the Quoting Market Participant to which a Directed Order is being sent has indicated that it wishes to receive Directed Orders that are Liability Orders, a Directed Order must be a Non-Liability Order, and as such, at the time of entry must be designated as:

(A) An ''All-or-None'' order (''AON'') that is at least one normal unit of trading (e.g. 100 shares) in excess of the Attributable Quote/Order of the Quoting Market Participant to which the order is directed;

(B) A ''Minimum Acceptable Quantity'' order (''MAQ''), with a MAQ value of at least one normal unit of trading in excess of Attributable Quote/Order of the Quoting Market Participant to which the order is directed. Nasdaq will append an indicator to the quote of a Quoting Market Participant that has indicated to Nasdaq that it wishes to receive Directed Orders that are Liability Orders; or

(C) A Directed Order that is entered at a price that is inferior to the Attributable Quote/Order of the Quoting Market Participant to which the order is directed.

(2) A Directed Order may have a time in force of 3 to 99 minutes, or may be designated as ''Day'' order, or an ''End of Day'' order.

(3) Directed Orders shall be processed pursuant to Rule 4710(c).

(4) A Directed Order entered into the system may not be cancelled until a minimum of five seconds has elapsed after the time of entry. This five-second time period shall be measured by the Nasdaq Market Center.

(5) Directed Orders shall not be entered in ITS Securities.]

(c) through (e) No changes.

4710. Participant Obligations in the Nasdaq Market Center

(a) Registration.

No change.

(b) Non-Directed Orders.

(1) No change.

(A) No change.

(B) Processing of Non-Directed Orders—Upon entry of a Non-Directed Order into the system, the Nasdaq Market Center will ascertain who the next Quoting Market Participant or Order Entry Firm in queue to receive an order is and shall deliver an execution to Quoting Market Participants or Order Entry Firms that participate in the automatic-execution functionality of the system, or shall deliver a Liability Order to Quoting Market Participants that participate in the order-delivery functionality of the system. Non-Directed Orders entered into the Nasdaq Market Center system shall be delivered to or automatically executed against Quoting Market Participants' or Order Entry Firms' Displayed Quotes/Orders and Reserve Size, in strict price/time priority, as described in the algorithm contained in subparagraph (b)(B)(i) of this rule. The individual time priority of each Quote/Order submitted to the Nasdaq Market Center shall be assigned by the system based on the date and time such Quote/Order was received. Remainders of Quote/Orders reduced by execution, if retained by the system, shall retain the time priority of their

original entry. For purposes of the execution algorithms described in paragraphs (i), (ii) and (iii) below, ''Displayed Quotes/Orders'' shall also include any odd-lot, odd-lot portion of a mixed-lot, or any odd-lot remainder of a round-lot(s) reduced by execution, share amounts that while not displayed in the quotation montage of the Nasdaq Market Center, remain in system and available for execution.

(i) [Default] Execution Algorithm—Price/Time *Priority*—The system will *execute Quotes/Orders in* [default to a] strict price/time priority within Nasdaq, and will attempt to access interest in the system in the following priority and order:

a. Displayed Quotes/Orders of Nasdaq Market Makers, ITS/CAES Market Makers, and Nasdaq ECNs, displayed Non-Attributable Quotes/Orders of NNMS Order Entry Firms, and displayed non-attributable agency Quotes/Orders of UTP Exchanges (as permitted by subparagraph (f) of this rule), in time priority [between] among such participants' Quotes/Orders;

b. Reserve Size of Nasdaq Quoting Market Participants and Order Entry Firms, in time priority [between] *among* such participants' Quotes/Orders; and

c. Principal Quotes/Orders of UTP Exchanges, in time priority [between] *among* such participants' Quotes/Orders.

(ii) Exceptions—The following exceptions shall apply to the above execution parameters:

a. [If a Nasdaq Quoting Market Participant or Order Entry Firm enters a Non-Directed Order into the system, before sending such Non-Directed Order to the next Quoting Market Participants in queue, the Nasdaq Market Center will first attempt to match off the order against the Nasdaq Quoting Market Participant's or Order Entry Firm's own Quote/Order if the participant is at the best bid/best offer in Nasdaq.] Nasdaq Quoting Market Participants and Order Entry Firms [may avoid any attempted automatic system matching permitted by this paragraph through the] *can* use [of an] *the* anti-internalization qualifier (AIQ) quote/order flag containing the [following values:] ''Y'' *value to deviate from time priority as follows:* [or ''I'', subject to the following restrictions:]

Y—[if] *when* the Y value is selected, the system will execute the flagged quote/order solely against attributable and non-attributable quotes/orders (displayed and reserve) of Quoting Market Participants and Order Entry Firms other than the party entering the AIQ ''Y'' flagged quote/order. If the only available trading interest is that of the same party that entered the AIQ ''Y'' flagged quote/order, the system will not execute at an inferior price level, and will instead return the latest entered of those interacting quote/orders (or unexecuted portions thereof) to the entering party; provided, however, that in the case of a Discretionary Order interacting with a bid/offer entered by the system pursuant to Rule 4710(b)(5), the Discretionary Order (or unexecuted portions thereof) will be returned.

[I—if the I value is selected, the system will execute against all available trading interest, including the quote/orders of the Order Entry Firm or Nasdaq Quoting Market Participant that entered the AIQ ''I'' flagged order, based on the price/time execution algorithm.]

b. through g. No changes.

(C) and (D) No changes.

(2) No change.

(3) No change.

(A) No change.

(B) No change.

(i) Exception—The following exception shall apply to the above locked/crossed processing parameters:

If an ITS/CAES Market Maker has entered a Locking/Crossing Quote/Order into the system that would become subject to the automated processing described in subparagraph (B) above, the [system shall, before sending the order to any other ITS/CAES Market Maker or Order Entry Firm, first attempt to match off the order against the locking/crossing ITS/CAES Market Maker's own Quote/Order if that participant's Quote/Order is at the highest bid or lowest offer, as appropriate. An] ITS/CAES Market Maker [may avoid this automatic matching through the] *can* use *the* [of] anti-internalization qualifier as set forth in Rule 4710(b)(1)(B)(ii)(a) *to deviate from time priority.* Order Entry Firms that enter locking/crossing Quotes/Orders *also can use the anti-internalization qualifier* [shall have those Quotes/Orders processed as set forth in subparagraph (B) above, unless they voluntarily select a ''Y'' AIQ Value] as provided for in Rule 4710(b)(1)(B)(ii)(a) *to deviate from time priority.*

(4) through (8) No changes.

(c) *Reserved* [Directed Order Processing.

A participant may enter a Directed Order in Nasdaq-listed securities into the Nasdaq Market Center to access a specific Quote/Order in the Nasdaq Quotation Montage and to begin the negotiation process with a particular Quoting Market Participant. The system will deliver an order (not an execution) to the Quoting Market Participant designated as the recipient of the order. Upon delivery, the Quoting Market Participant shall owe no liability under the Firm Quote Rule to that order, unless the Quoting Market Participant to which a Directed Order is being sent has indicated that it wishes to receive Directed Orders that are Liability Orders (as described in Rule 4706(b)). Additionally, upon delivery, the system will not decrement the receiving Quoting Market Participant's Quote/Order. This provision shall not apply to Preferenced Orders.]

(d) No change.

(e) UTP Exchanges.

Participation in the Nasdaq Market Center by UTP Exchanges is voluntary. If a UTP Exchange does not participate in the Nasdaq Market Center, the UTP Exchange's quote will not be accessed through the Nasdaq Market Center, and the Nasdaq Market Center will not include the UTP Exchange's quotation for order processing and execution purposes.

A UTP Exchange may voluntarily participate in the Nasdaq Market Center if it executes a Nasdaq Workstation Subscriber Agreement, as amended, for UTP Exchanges, and complies with the terms of this subparagraph (f) of this rule. The terms and conditions of such access and participation, including available functionality and applicable rules and fees, shall be set forth in and governed by the Nasdaq Workstation Subscriber Agreement, as amended for UTP Exchanges. The Nasdaq Workstation Subscriber Agreement, as amended for UTP Exchanges may expand but shall not contract the rights and obligations set forth in these rules. Access to UTP Exchanges may be made available on terms that differ from the terms applicable to members but may not unreasonably discriminate among similarly situated UTP Exchanges. The following provisions shall apply to UTP Exchanges that choose to participate in the Nasdaq Market Center.

(1) Order Entry—UTP Exchanges that elect to participate in the system shall be permitted to enter [Directed and] Non-Directed Orders into the system subject to the conditions and requirements of Rules 4706. [Directed and] Non-Directed Orders entered by UTP Exchanges shall be processed (unless otherwise specified) as described subparagraphs (b) and (c) of this rule.

(2) and (3) No changes.

(4) *Reserved* [Directed Order Processing—UTP Exchanges that elect to participate in the system shall participate in the Directed Order processing as described in subparagraph (c) of this rule.]

(5) and (6) No changes.

4719. Anonymity

(a) No change.

(b) Full Anonymity.

(1) through (4) No changes. (5)(A) No change.

(B) In the situations described in paragraphs (b)(2) or (b)(4) of Rule 4719, [and solely with respect to the member that submits, and receives an execution of, a fully anonymous Non-Attributable Quote/Order that is a Preferenced Order,] the member retains the obligation to comply with Rules 17a–3(a)(1) and 17a–4(a) because it possesses the identity of its contra party.

II. Self-Regulatory Organization's Statement of the Purpose of, and Statutory Basis for, the Proposed Rule Change

In its filing with the Commission, Nasdaq included statements concerning the purpose of and basis for the proposed rule change and discussed any comments it received on the proposed rule change. The text of these statements may be examined at the places specified in Item IV below. Nasdaq has prepared summaries, set forth in Sections A, B, and C below, of the most significant aspects of such statements.

A. Self-Regulatory Organization's Statement of the Purpose of, and Statutory Basis for, the Proposed Rule Change

1. Purpose

Nasdaq is proposing to modify the Nasdaq Market Center execution service (formerly known as SuperMontage) to eliminate certain functionality that deviates from the time priority aspect of the system's price/time priority execution algorithm. The changes are being proposed to eliminate the issue that has prevented Nasdaq from registering as an exchange.

Nasdaq has been working with Commission staff to resolve the open issues concerning its application to register as an exchange. The issue delaying Nasdaq's application concerns the Commission's policy that orders generally must be executed on an exchange in time priority at the best price displayed on the exchange. Nasdaq's current execution service does not follow strict time priority in all situations.

For example, the execution algorithm for Non-Directed Orders generally executes trades in strict time priority at the best price by matching an incoming order against the oldest order at the best price.[4] However, there is an internalization exception to strict time priority. When deciding against which orders an incoming order should be executed, the system first attempts to execute the incoming order against the member submitting the order—in effect internalizing the order through the system—but only if the member submitting the order is at the best price. The system will not internalize the order at a price inferior to the best price displayed on Nasdaq. Nasdaq is proposing to re-program the system so that it does not deviate from time priority to internalize an order. With one exception, the system will execute in strict time priority at the best price.

The exception concerns Nasdaq's desire to continue to provide members the opportunity to deviate from time priority to *avoid* internalizing an order. For example, assume that, in the following time priority, members A, B, and C are displaying bids at $10, and member A submits a sell order. The system, if member A has chosen the anti-internalization qualifier (''AIQ flag'') for this order, will not execute member A's sell order against its bid, but instead will skip member A and execute against members B and C. The AIQ flag is designed to assist members in complying with regulatory and/or fiduciary obligations that govern their dealings with accounts managed by them or their affiliates.[5] Nasdaq believes it is appropriate to deviate from time priority in these circumstances because members are attempting to comply with regulatory and/or fiduciary obligations.

Nasdaq also is proposing to eliminate Preferenced Orders. Preferenced Orders are a type of Non-Directed Order and thus are processed in the same order queue and execution algorithm as other Non-Directed Orders. With a Preferenced Order, however, the member submitting the order can specify that it only seeks to execute against a particular contra party—the ''preferenced'' party. When a Preferenced Order is next to be processed in the order queue, the system determines whether the preferenced party is at the best price. If the preferenced party is at the best price, the system will execute the order against the preferenced party—irrespective of whether the preferenced party has time priority.

Finally, Nasdaq also is proposing to eliminate the Directed Order process. The Directed Order process replicates the SelectNet functionality that existed prior to the implementation of SuperMontage and is not integrated with the Non-Directed Order execution algorithm—meaning that Directed Orders are processed independent of Non-Directed Orders. The Directed Order process allows members to negotiate transactions electronically, whereas the Non-Directed Order process automatically decrements quotes when an order is delivered against them.

For example, member A can send a Directed Order to sell to member B, who is displaying quotes in Nasdaq. Unless member B has expressly indicated it will accept liability orders through the Directed Order process, member B is not obligated to trade with the incoming order. Member B can reject the order, respond with a counter offer, or execute the order. Because the Directed Order process is used to negotiate trades, orders can be executed at prices inferior to the best prices displayed in Nasdaq. In addition, because Directed Orders are not integrated in Non-Directed Order execution algorithm, trades are executed without consideration of the time priority of orders in the Non-Directed Order process.

With the exception of the AIQ functionality, the changes described above eliminate certain elements of Nasdaq's execution service that deviate from time priority and thus, in Nasdaq's view, address the issue that has delayed Nasdaq's application to register as an exchange.[6] As previously discussed, Nasdaq believes the AIQ functionality is necessary and thus not inconsistent with the standards for registering as an exchange—because it is designed to prevent internalization and assist members in complying with regulatory or fiduciary obligations.

2. Statutory Basis

Nasdaq believes that the proposed rule change is consistent with the provisions of Section 15A of the Act,[7] in general and with Section 15A(b)(6) of the Act,[8] in particular, in that it is designed to prevent fraudulent and manipulative acts and practices, to

[4] *See* NASD Rule 4710(b)(1)(B)(i). Time priority is maintained within three different categories: Displayed Quotes/Orders, Reserve Size of Nasdaq Quoting Participants, and Principal Quotes/Orders of UTP Exchanges.

[5] For example, Section 17(a) of the Investment Company Act of 1940 (''Investment Company Act'') limits self-dealing by generally prohibiting affiliated persons of an investment company or principal underwriters of a registered investment company's securities from, among other things, knowingly selling securities to, or knowingly buying securities from, the investment company unless the securities being sold or bought are issued by the investment company or the Commission grants an application for an exemption pursuant to Section 17(b) of the Investment Company Act.

[6] *Supra* note 4. Time priority will be maintained within the three categories listed in footnote 3, not in aggregate.

[7] 15 U.S.C. 78*o*–3.

[8] 15 U.S.C. 78*o*–3(b)(6).

promote just and equitable principles of trade, remove impediments to a free and open market and a national market system, and, in general, to protect investors and the public interest. The proposed changes are consistent with the obligations of Section 15A(b)(6) of the Act because they will provide for greater time priority protection in Nasdaq's execution service. In addition, because the obligations under Section 15A(b)(6) and Section 6(b)(5) are the same, the proposed changes also are consistent with the obligations applicable to registered exchanges.

B. Self-Regulatory Organization's Statement on Burden on Competition

Nasdaq does not believe that the proposed rule change will result in any burden on competition that is not necessary or appropriate in furtherance of the purposes of the Act, as amended.

C. Self-Regulatory Organization's Statement on Comments on the Proposed Rule Change Received from Members, Participants, or Others

Written comments were neither solicited nor received.

III. Date of Effectiveness of the Proposed Rule Change and Timing for Commission Action

Within 35 days of the date of publication of this notice in the **Federal Register** or within such longer period (i) as the Commission may designate up to 90 days of such date if it finds such longer period to be appropriate and publishes its reasons for so finding or (ii) as to which the self-regulatory organization consents,[9] the Commission will:

A. By order approve such proposed rule change, or

B. Institute proceedings to determine whether the proposed rule change should be disapproved.

IV. Solicitation of Comments

Interested persons are invited to submit written data, views, and arguments concerning the foregoing, including whether the proposed rule change is consistent with the Act. Comments may be submitted by any of the following methods:

Electronic Comments

- Use the Commission's Internet comment form (*http://www.sec.gov/rules/sro.shtml*); or
- Send an e-mail to *rule-comments@sec.gov.* Please include File Number SR–NASD–2004–181 on the subject line.

Paper Comments

- Send paper comments in triplicate to Jonathan G. Katz, Secretary, Securities and Exchange Commission, 450 Fifth Street, NW., Washington, DC 20549–0609.

All submissions should refer to File Number SR–NASD–2004–181. This file number should be included on the subject line if e-mail is used. To help the Commission process and review your comments more efficiently, please use only one method. The Commission will post all comments on the Commission's Internet Web site (*http://www.sec.gov/rules/sro.shtml*). Copies of the submission, all subsequent amendments, all written statements with respect to the proposed rule change that are filed with the Commission, and all written communications relating to the proposed rule change between the Commission and any person, other than those that may be withheld from the public in accordance with the provisions of 5 U.S.C. 552, will be available for inspection and copying in the Commission's Public Reference Room. Copies of such filing also will be available for inspection and copying at the principal office of the NASD. All comments received will be posted without change; the Commission does not edit personal identifying information from submissions. You should submit only information that you wish to make available publicly. All submissions should refer to File Number SR–NASD–2004–181 and should be submitted on or before January 10, 2005.

For the Commission, by the Division of Market Regulation, pursuant to delegated authority.[10]

Margaret H. McFarland,

Deputy Secretary.

[FR Doc. E4–3720 Filed 12–17–04; 8:45 am]

BILLING CODE 8010–01–P

[9] Nasdaq has consented to an extension of the time period for Commission action.

[10] 17 CFR 200.30–3(a)(12).

SMALL BUSINESS ADMINISTRATION

Revocation of License of Small Business Investment Company

Pursuant to the authority granted to the United States Small Business Administration by the Final Order of the United States District Court for the Northern District of California, San Francisco Division, dated October 6, 2004, in Case No. C01–4886 EMC, the United States Small Business Administration hereby revokes the license of Point West Ventures, L.P., a Delaware Limited Partnership, to function as a small business investment company under the Small Business Investment Company License No. 09/09–0411 issued to Point West Ventures, L.P. on September 26, 1997, and said license is hereby declared null and void as of November 24, 2004.

Small Business Administration.

Dated: December 14, 2004.

Jaime Guzman Fournier,

Acting Associate Administrator for Investment.

[FR Doc. 04–27764 Filed 12–17–04; 8:45 am]

BILLING CODE 8025–01–P

SMALL BUSINESS ADMINISTRATION

[Declaration of Disaster #3627)

State of Florida (Amendment # 5)

In accordance with a notice received from the Department of Homeland Security—Federal Emergency Management Agency—effective December 9, 2004, the above numbered declaration is hereby amended to include Brevard, Citrus, Clay, Duval, Flagler, Highlands, Indian River, Lake, Lee, Manatee, Marion, Martin, Okeechobee, Osceola, Orange, Palm Beach, Pasco, Polk, Seminole, St. Johns, St. Lucie, and Volusia as disaster areas due to damages caused by Hurricane Ivan occurring on September 13, 2004, and continuing through November 17, 2004.

In addition, applications for economic injury loans from small businesses located in the contiguous counties of Alachua, Baker, Bradford, Broward, Charlotte, Collier, DeSoto, Glades, Hardee, Hendry, Hernando, Hillsborough, Levy, Nassau, Pinellas, Putnam, Sarasota, and Sumter may be filed until the specified date at the previously designated location. All other counties contiguous to the above named primary counties have previously been declared.

All other information remains the same, *i.e.*, the deadline for filing applications for physical damage is January 3, 2005 and for economic injury the deadline is June 16, 2005.

(Catalog of Federal Domestic Assistance Program Nos. 59002 and 59008).

Dated: December 14, 2004.

Herbert L. Mitchell,

Associate Administrator for Disaster Assistance.

[FR Doc. 04–27763 Filed 12–17–04; 8:45 am]

BILLING CODE 8025–01–P

SOCIAL SECURITY ADMINISTRATION

The Ticket to Work and Work Incentives Advisory Panel Teleconference

AGENCY: Social Security Administration (SSA).

ACTION: Notice of teleconference.

DATES: Tuesday, January 18, 2005.

Teleconference: Tuesday, January 18, 2005, 1 p.m. to 3 p.m. Eastern time.

Ticket to Work and Work Incentives Advisory Panel Conference Call

Call-in number: 1–888–323–2711.

Pass code: PANEL.

Leader/Host: Bertha De La Rosa Aponte.

SUPPLEMENTARY INFORMATION:

Type of meeting: This teleconference meeting is open to the public. The interested public is invited to participate by calling into the teleconference at the number listed above. Public testimony will not be taken.

Purpose: In accordance with section 10(a)(2) of the Federal Advisory Committee Act, the Social Security Administration (SSA) announces this teleconference meeting of the Ticket to Work and Work Incentives Advisory Panel (the Panel). Section 101(f) of Public Law 106–170 establishes the Panel to advise the President, the Congress and the Commissioner of SSA on issues related to work incentives programs, planning and assistance for individuals with disabilities as provided under section 101(f)(2)(A) of the Ticket to Work and Work Incentives Advisory Act (TWWIIA). The Panel is also to advise the Commissioner on matters specified in section 101(f)(2)(B) of that Act, including certain issues related to the Ticket to Work and Self-Sufficiency Program established under section 101(a) of that Act.

Agenda: The Panel will be discussing strategic planning and its Annual Report to the President and Congress. The agenda for this meeting will be posted on the Internet at *http://www.socialsecurity.gov/work/panel* one week prior to the teleconference or can be received in advance electronically or by fax upon request.

Contact Information: Records are being kept of all Panel proceedings and will be available for public inspection by appointment at the Panel office. Anyone requiring information regarding the Panel should contact the TWWIIA Panel staff by:

- Mail addressed to Ticket to Work and Work Incentives Advisory Panel Staff, Social Security Administration, 400 Virginia Avenue, SW., Suite 700, Washington, DC 20024;
- Telephone contact with Shirletta Banks (202) 358–6430;
- Fax at (202) 358–6440; or
- E-mail to *TWWIIAPanel@ssa.gov.*

Dated: December 9, 2004.

Carol Brenner,

Designated Federal Official.

[FR Doc. 04–27706 Filed 12–17–04; 8:45 am]

BILLING CODE 4191–02–P

DEPARTMENT OF STATE

[Public Notice 4900]

Notice of Meeting; United States International Telecommunication Advisory Committee Meeting on Preparations for the Telecommunication Standardization Advisory Group Meeting and for Other ITU Telecommunication Standardization Study Group Meetings

The Department of State announces the following meetings of the International Telecommunication Advisory Committee (ITAC) to prepare for the ITU Telecommunication Standardization Advisory Group Meeting and ITU–T Study Groups 3, 4, and 17 Meetings.

The ITAC will meet as follows with an agenda for preparations for the ITU–T Telecommunication Standardization Advisory Group (TSAG) meeting: January 19, February 2, February 16, and March 2, 2005. All meetings will be from 2–4 p.m. and will be held in the Washington, DC area. The meeting of February 16 will be a teleconference. People desiring to attend may find the actual location and the call in numbers for a teleconference bridge by e-mailing the secretariat at *minardje@state.gov.*

The ITAC will meet as follows with an agenda for preparations for the ITU–T Study Group 3 (Tariff and accounting principles) meeting: January 5 and January 11, 2005 from 2–4 p.m.; these meetings will be held in the Washington, DC area. People desiring to attend may find the actual location by e-mailing the secretariat at *minardje@state.gov.*

The ITAC will meet to prepare for ITU-T Study Group 17 (Security, languages and telecommunication software) meeting and the ITU–T Study Group 4 (Telecommunication management) meeting on January 26, 2005, at 10 a.m. at the offices of Communication Technologies, Inc. (COMTek), 14151 Newbrook Dr., Suite 400, Chantilly, VA 20151. Driving directions to COMTek may be obtained at (703) 961–9080. People unable to attend in person may attend via conference bridge; call in information may be obtained by calling the secretariat at (303) 499–2145.

Dated: December 10, 2004.

Anne Jillson,

Foreign Affairs Officer, Department of State.

[FR Doc. 04–27806 Filed 12–17–04; 8:45 am]

BILLING CODE 4710–07–P

DEPARTMENT OF STATE

[Public Notice 4899]

Shipping Coordinating Committee; Notice of Meeting

The Shipping Coordinating Committee will conduct an open meeting between 10 a.m. on Tuesday, January 11, 2005 in Room 6319, at U.S. Coast Guard Headquarters, 2100 Second Street, SW., Washington, DC. The purpose of the meeting is to prepare for the 49th Session of the International Maritime Organization (IMO) Subcommittee on Fire Protection to be held at the IMO Headquarters in London, England from January 24–28, 2005.

The primary matters to be considered include:

—Large passenger ship safety.
—Performance testing and approval standards for fire safety systems.
—Review of the 2000 HSC Code and amendments to the DSC Code and the 1994 HSC Code.
—Amendments to Res.A.653 (16) relating to the preparation of specimens of sealants and mastics.
—Amendments to resolution A.754 (18) relating to performance criteria for fire doors.
—Review of the fire protection provisions of the LHNS guidelines.
—Performance standards for evacuation guidance systems.
—Recommendations on evacuation analysis for new and existing passenger ships.
—Analysis of fire records.
—Development of provisions for gas fuelled ships.
—Consideration of IACS unified interpretations.

Members of the public may attend these meetings up to the seating capacity of the room. Interested persons may seek information by writing: Chief, Office of Design and Engineering Standards, Commandant (G–MSE–4), U.S. Coast Guard Headquarters, 2100 Second Street, SW., Washington, DC 20593–0001, by calling: Mr. R. Eberly at (202) 267–1861, or by visiting the following World Wide Web site: *http://www.uscg.mil/hq/g-m/mse4/stdimofp.htm.*

Dated: December 14, 2004.

Clayton L. Diamond,

Executive Secretary, Shipping Coordinating Committee.

[FR Doc. 04–27807 Filed 12–17–04; 8:45 am]

BILLING CODE 4710–09–P

DEPARTMENT OF TRANSPORTATION

Research and Special Programs Administration

[Docket No. RSPA–04–19883]

Pipeline Safety: Oversight Implementation and Inspection Protocols

AGENCY: Office of Pipeline Safety, Research and Special Programs Administration, DOT.

ACTION: Notice; Gas Integrity Management Workshop for Inspection Protocols.

SUMMARY: The Research and Special Programs Administration's (RSPA) Office of Pipeline Safety (OPS) and the National Association of Pipeline Safety Representatives (NAPSR) will cosponsor a workshop to discuss the oversight implementation of the Gas Integrity Management program and the Inspection Protocols. The workshop will provide a detailed review and discussion of Gas Pipeline Integrity Management Inspection Protocols as posted on the Gas Integrity Management public Web site at *http://primis.rspa.dot.gov/gasimp/prolist.gim.* RSPA/OPS and NAPSR will gather issues presented at the workshop needing additional clarification or guidance material development for the implementation of the rule oversight program.

DATES: January 19–20, 2005, from 8 a.m. to 5 p.m.

ADDRESSES: The Westin Atlanta North (Perimeter Mall), Seven Concourse Parkway, Atlanta, Georgia. URL: *http://www.westin.com.* Phone: (770) 395–3900; fax: (770) 395–3935. For discounted rates, please refer to the U.S. Department of Transportation block when making reservations. The deadline for reserving sleeping room accommodations is January 3, 2005, at 5 p.m.

This meeting is open to all interested parties. However, operators of natural gas transmission pipelines are urged to attend either in person or to observe the workshop via the internet. RSPA/OPS will web cast this meeting. To facilitate meeting planning and to obtain additional information regarding the web cast, advance registration for the meeting is strongly encouraged and can be accomplished online at the following Web site: *http://primis.rspa.dot.gov/meetings.* Internet links to the web cast will also be available through this Web site, or from the front page of the OPS Web site: *http://ops.dot.gov.* Those planning to attend this meeting through the web cast are strongly encouraged to review our tips for ensuring successful viewing in advance, as well as to register through our Web site. Registration both ensures that we can accommodate all attendees and provides additional information to them via the Internet. The deadline for online meeting registration is January 5, 2005. Walk-in registration will be accommodated on a first-come, first-served basis.

Attendees will be provided the opportunity, at scheduled times during the workshop, to ask questions or make short statements on the topics under discussion. You may submit written comments by mail or deliver to the Dockets Facility, U.S. Department of Transportation (DOT), Room PL–401, 400 Seventh Street, SW., Washington, DC 20590–0001. It is open from 10 a.m. to 5 p.m., Monday through Friday, except Federal holidays. You also may submit written comments to the docket electronically. To do so, log onto the following Internet Web address: *http://dms.dot.gov.* Click on ''Help'' for instructions on how to file a document electronically. All written comments should identify the docket and notice numbers which appear in the heading of this notice. Anyone who would like confirmation of mailed comments must include a self-addressed stamped postcard.

Anyone is able to search the electronic form of all comments received into any of our dockets by the name of the individual submitting the comment (or signing the comment, if submitted on behalf of an association, business, labor union, *etc.*). You may review DOT's complete Privacy Act Statement in the April 11, 2000, issue of the **Federal Register** (Volume 65, Number 70; Pages 19477–78) or you may visit *http://dms.dot.gov.*

FOR FURTHER INFORMATION CONTACT: For additional information on hotel accommodations, contact Janice Morgan at (202) 366–2392 or *janice.morgan@rspa.dot.gov.*

Contact Zach Barrett at (405) 954–5559; E-mail *zach.barrett@tsi.jccbi.gov,* or Jeff Wiese at (202) 366–2036; E-mail *jeff.wiese@rspa.dot.gov* regarding the subject matter of this notice. Additional information about gas integrity management can be found at *http://primis.rspa.dot.gov/gasimp.* You can read comments and other material in the docket on the Internet at: *http://dms.dot.gov.*

Information on Services for Individuals With Disabilites: For information on facilities or services for individuals with disabilities or to request special assistance at the meeting, contact Juan Carlos Martinez at (202) 366–1933; E-mail: *juan.martinez@rspa.dot.gov.*

SUPPLEMENTARY INFORMATION: The Pipeline Safety Improvement Act of 2003 required RSPA/OPS to issue regulations, not later than December 17, 2003, prescribing standards to direct an operator's conduct of a risk analysis and adoption and implementation of an integrity management program. On December 15, 2003, RSPA/OPS issued a Final Gas Integrity Management Rule (68 FR 69778) meeting the Congressional requirements for a risk analysis and implementation of an integrity management program. As in the earlier rule for integrity management of hazardous liquid pipelines, RSPA/OPS had four fundamental objectives for the Gas Integrity Management Rule: (1) To perform ongoing integrity assessments (*i.e.*, in-line inspection, pressure testing or direct assessment) for pipelines that can affect high consequence areas; (2) to improve operator integrity management systems; (3) to improve government oversight of operator integrity management programs; and (4) to improve public assurance in pipeline safety. RSPA/OPS held an Integrity Management Workshop May 11–12, 2004, providing an in-depth discussion of the Gas Integrity Management Rule requirements.

The January 19–20, 2005, workshop will provide insight into the Gas Integrity Management Inspection Protocols and implementation of our oversight program. Specific requirements of the rule, as well as a wide variety of information concerning its implementation and enforcement, can be found at: *http://primis.rspa.dot.gov/gasimp.*

Authority: 49 U.S.C. 60102, 60109, 60117.

Issued in Washington, DC on December 16, 2004.

Stacey L. Gerard,

Associate Administrator for Pipeline Safety.

[FR Doc. 04–27894 Filed 12–17–04; 8:45 am]

BILLING CODE 4910–60–P

DEPARTMENT OF TRANSPORTATION

Surface Transportation Board

[STB Ex Parte No. 558 (Sub–No. 8)]

Railroad Cost of Capital—2004

AGENCY: Surface Transportation Board.

ACTION: Notice of decision instituting a proceeding to determine the railroads' 2004 cost of capital.

SUMMARY: The Board is instituting a proceeding to determine the railroad industry's cost of capital for 2004. The decision solicits comments on: (1) The railroads' 2004 current cost of debt capital; (2) the railroads' 2004 current cost of preferred stock equity capital (if any); (3) the railroads' 2004 cost of common stock equity capital; and (4) the 2004 capital structure mix of the railroad industry on a market value basis.

DATES: Notices of intent to participate are due no later than January 17, 2005. Statements of the railroads are due by March 28, 2005. Statements of other interested persons are due by April 25, 2005. Rebuttal statements by the railroads are due by May 16, 2005.

ADDRESSES: Send an original and 10 copies of statements and a copy of the statement on a 3.5 inch disk in WordPerfect 9.0, and an original and 1 copy of the notice of intent to participate to: Surface Transportation Board, 1925 K Street, NW., Washington, DC 20423–0001.

FOR FURTHER INFORMATION CONTACT: Leonard J. Blistein, (202) 565–1529. (Federal Information Relay Service (FIRS) for the hearing impaired: 1 (800) 877–8339.)

SUPPLEMENTARY INFORMATION: The Board's decision is posted on the Board's Web site, *http://www.stb.dot.gov.* In addition, copies of the decision may be purchased from ASAP Document Solutions by calling 202–306–4004 (assistance for the hearing impaired is available through FIRS at 1–800–877–8339), or by e-mail at *asapdc@verizon.net.*

We preliminarily conclude that the proposed action will not significantly affect either the quality of the human environment or the conservation of energy resources.

Authority: 49 U.S.C. 10704(a).

Decided: December 13, 2004.

By the Board, Chairman Nober, Vice Chairman Mulvey, Commissioner Buttrey.

Vernon A. Williams,

Secretary.

[FR Doc. 04–27630 Filed 12–17–04; 8:45 am]

BILLING CODE 4915–01–P

DEPARTMENT OF TRANSPORTATION

Surface Transportation Board

[STB Finance Docket No. 34540]

The Columbus & Ohio River Rail Road Company—Acquisition and Operation Exemption—Rail Lines of CSX Transportation, Inc.

By notice of exemption published on October 20, 2004 (69 FR 61702–03) and served on October 21, 2004, the Columbus & Ohio River Rail Road Company (CUOH), a Class III rail carrier, was granted authority under 49 CFR 1150.41 to acquire and operate, pursuant to an agreement with CSX Transportation, Inc. (CSXT), approximately 114 miles of rail line: (1) by purchase, between Columbus, OH, milepost BP 138.0, and Newark, OH, milepost BQ 0.0, totalling approximately 32.6 miles;[1] and (2) by lease, between Mt. Vernon, OH, milepost BQ 25.9, and Cambridge, OH, milepost BP 49.49, via Newark, milepost BQ 0.0, totalling approximately 81.4 miles.[2] The lines are located in Franklin, Licking, Muskingum, Knox, and Guernsey Counties, OH. CUOH states that following this transaction, CSXT will no longer operate trains on any of the above-described rail lines, and that CUOH will be the sole operator of the rail lines. The transaction also includes approximately 1.5 miles of incidental trackage rights assigned by CSXT to CUOH over a line of the Ohio Southern Railroad, Inc. (OSR)[3] between milepost 16.7 and milepost 18.2 in Zanesville, OH.[4]

On October 22, 2004,[5] CUOH submitted a supplemental notice to increase the amount of rail lines it proposed to acquire from approximately 114 miles to approximately 120.35 miles, as follows: (1) By purchase, between Columbus, OH, milepost BP 137.0, and Newark, OH, milepost BP 100.6, and between milepost BBW 0.0 and milepost BBW 1.8 in Newark, totalling approximately 38.2 miles; and (2) by lease, between Cambridge, OH, milepost BP 49.49 and Newark milepost BP 100.6, between Cambridge milepost BPB 0.0 and Byesville, OH, milepost 5.14, and between Newark milepost BQ 0.0 and Mt. Vernon, OH, milepost BQ 25.9, totalling approximately 82.15 miles. Accordingly, the notice of exemption in this proceeding is being republished to give notice of CUOH's supplemental filing to include the additional 6.35 miles of rail line.

Because CUOH's projected annual revenues will exceed $5 million, CUOH certified to the Board on August 30, 2004, that it had complied with the requirements of 49 CFR 1150.42(e) providing for notice to employees and their labor unions on the affected lines. CUOH also certified that its projected revenues as a result of this transaction would not result in the creation of a Class II or Class I rail carrier.

The transaction was scheduled to be consummated on or after October 29, 2004, which was 60 days after CUOH's certification to the Board that it had complied with the Board's rule at 49 CFR 1150.42(e).

If the verified notice contains false or misleading information, the exemption is void *ab initio.* Petitions to revoke the exemption under 49 U.S.C. 10502(d) may be filed at any time. The filing of a petition to revoke will not automatically stay the transaction.[6]

[1] CSXT presently holds a 50% ownership interest in the rail line from Columbus to Newark (the C&N Subdivision). The balance of the ownership interest in this line is held by the State of Ohio, and both CUOH and CSXT currently hold operating rights over the C&N Subdivision. *See Caprail I–Acquisition Exemption—Consolidated Rail Corporation*, Finance Docket No. 31961 (Sub-No. 1), *Ohio Department of Transportation—Lease Exemption—Caprail I Lines in Ohio*, Finance Docket No. 31961 (Sub-No. 2), and *Columbus & Ohio River Railroad Company—Lease and Operation Exemption—Ohio Department of Transportation Lines*, Finance Docket No. 31961 (Sub-No. 3) (ICC served Jan. 15, 1992). CUOH states that, through this transaction, it will purchase CSXT's 50% share in the Columbus to Newark line.

[2] The line to be leased consists of the Lake Erie Subdivision (Newark to Mt. Vernon) and the Central Ohio Subdivision (Newark to Cambridge).

[3] OSR and CUOH are subsidiaries of Summit View, Inc., a noncarrier holding company.

[4] Prior to this transaction, CUOH and the Ohio Central Railroad (OHCR) interchanged traffic at Morgan Run (Coshocton), OH. Following this transaction, CUOH and OHCR will exchange traffic at both Coshocton and Zanesville.

[5] Although the supplemental notice was submitted on October 22, 2004, the required filing fee of $1,400 was not received until October 28, 2004, which therefore constitutes the actual filing date of the supplemental notice.

[6] On September 13, 2004, the Brotherhood of Locomotive Engineers & Trainmen (BLET) filed a protest asking the Board to reject CUOH's notice and a notice filed in *Indiana & Ohio Central Railroad, Inc.—Acquisition and Operation Exemption—CSX Transportation, Inc.*, STB Finance Docket No. 34536 (STB served Oct. 1, 2004), for another shortline carrier to operate through lease approximately 107 miles of CSXT's rail line between NA Tower, OH, and Oakley, OH, and Oakley and Columbus, OH. On September 15, 2004, the United Transportation Union (UTU) filed a pleading titled as a petition to revoke, seeking relief identical to that sought by BLET. In their filings, BLET and UTU sought the same relief regarding CUOH's notice filed here.

On September 24, 2004, an amended petition to revoke was filed by UTU. By facsimile filed on September 30, 2004, UTU certified to the Board that it served a copy of its pleadings upon CUOH, and UTU filed another petition to revoke and sought discovery. On October 19 and 28, 2004, CUOH filed replies. On November 16, 2004, UTU filed a motion to compel. CUOH responded on December 6, 2004.

Continued

An original and 10 copies of all pleadings, referring to STB Finance Docket No. 34540, must be filed with the Surface Transportation Board, 1925 K Street, NW., Washington, DC 20423–0001. In addition, a copy of each pleading must be served on Andrew B. Kolesar III, Slover & Loftus, 1224 17th Street, NW., Washington, DC 20036.

Board decisions and notices are available on our Web site at *http://www.stb.dot.gov.*

Decided: December 13, 2004.

By the Board, David M. Konschnik, Director, Office of Proceedings.

Vernon A. Williams,

Secretary.

[FR Doc. 04–27743 Filed 12–17–04; 8:45 am]

BILLING CODE 4915–01–P

DEPARTMENT OF TRANSPORTATION

Surface Transportation Board

[STB Finance Docket No. 34621]

Wisconsin & Southern Railroad Co.—Trackage Rights Exemption—Wisconsin Central Ltd.

Wisconsin Central Ltd. (WCL) has agreed to grant overhead trackage rights to Wisconsin & Southern Railroad Co. (WSOR) over WCL's rail line between the WCL/WSOR connection at North Milwaukee at milepost 95.18 and the property line at Saukville, WI, at milepost 114.8, a distance of approximately 19.62 miles.[1]

The earliest the transaction could be consummated was December 8, 2004, which was one week after the filing date of the notice of exemption. However, WSOR indicates that it proposes to consummate the transaction no later than 15 days after the Board renders a favorable decision in a Petition for Declaratory Order filed by the Wisconsin Department of Transportation (WisDOT) in STB Finance Docket No. 34623, currently pending, requesting a determination that WisDOT will not become a rail carrier by its purchase of certain assets of a rail line over which WSOR is acquiring the right to operate.[2]

The purpose of the trackage rights is to enable WSOR to connect the Kiel-Saukville line with the rest of its rail system and provide shippers on the line with more frequent, locally oriented service than is currently provided by WCL. The trackage also will enable WSOR to offer shippers multiple Class I railroad connections, which they currently lack, new markets for their outbound traffic, and new sources for inbound traffic located on WSOR's rail system.

As a condition to this exemption, any employees affected by the trackage rights will be protected by the conditions imposed in *Norfolk and Western Ry. Co.—Trackage Rights—BN*, 354 I.C.C. 605 (1978), as modified in *Mendocino Coast Ry., Inc.—Lease and Operate*, 360 I.C.C. 653 (1980).

This notice is filed under 49 CFR 1180.2(d)(7). If the notice contains false or misleading information, the exemption is void *ab initio*. Petitions to revoke the exemption under 49 U.S.C. 10502(d) may be filed at any time. The filing of a petition to revoke will not automatically stay the transaction.

An original and 10 copies of all pleadings, referring to STB Finance Docket No. 34621, must be filed with the Surface Transportation Board, 1925 K Street, NW., Washington, DC 20423–0001. In addition, a copy of each pleading must be served on John D. Heffner, 1920 N Street, NW., Suite 800, Washington, DC 20036.

Board decisions and notices are available on our Web site at *http://www.stb.dot.gov.*

Decided: December 13, 2004.

By the Board, David M. Konschnik, Director, Office of Proceedings.

Vernon A. Williams,

Secretary.

[FR Doc. 04–27856 Filed 12–17–04; 8:45 am]

BILLING CODE 4915–01–P

The Board will address these filings in a subsequent decision.

[1] A redacted version of the trackage rights agreement between WSOR and WCL was filed with the notice of exemption. WSOR concurrently filed a full, confidential version of the agreement under seal along with a motion for protective order under 49 CFR 1104.14 to prevent public disclosure of commercially sensitive data contained in the document which could be damaging if disclosed. The motion will be granted. The confidential version of its agreement will be kept under seal and will not be placed in the public docket unless otherwise ordered by the Board.

[2] WSOR states that the trackage rights will enable it to connect its rail system with that line, which WisDOT recently was authorized to acquire the assets of, and WSOR to operate, in *Wisconsin Central Ltd.—Abandonment—in Ozaukee, Sheboygan and Manitowoc Counties, WI*, STB Docket No. AB–303 (Sub-No. 27) (STB served Dec. 3, 2004). That line is known as the Plymouth Line and extends some 37-miles from milepost 114.8 near Saukville to milepost 151.8 near Kiel, in Ozaukeee, Sheboygan and Manitowoc Counties, WI.

DEPARTMENT OF THE TREASURY

Financial Crimes Enforcement Network

Agency Information Collection Activities; Proposed Collection; Comment Request

AGENCY: Financial Crimes Enforcement Network (''FinCEN''), Treasury.

ACTION: Notice and request for comments.

SUMMARY: FinCEN, a bureau of the U.S. Department of the Treasury, invites all interested parties to comment on its continuing collection of information requirements in 31 CFR 103.22–103.29, 103.32–103.38, 103.64, 103.81–103.87, and Form TD F 90–22.1, Report of Foreign Bank and Financial Accounts. This request for comments is made pursuant to the Paperwork Reduction Act of 1995 (44 U.S.C. chapter 35).

DATES: Written comments should be received on or before February 18, 2005, to be assured of consideration.

ADDRESSES: Direct all written comments to: Office of Chief Counsel, Financial Crimes Enforcement Network, U.S. Department of the Treasury, P.O. Box 39, Vienna, VA 22183, *Attention:* PRA Comments—31 CFR part 103. Comments also may be submitted by electronic mail to the following Internet address: ''*regcomments@fincen.gov*'' with the caption in the body of the text, ''*Attention:* PRA Comments—31 CFR Part 103.''

FOR FURTHER INFORMATION CONTACT: Requests for additional information should be directed to Lindsay Orlin (703) 905–3590, FinCEN, Russell Stephenson, FinCEN (202) 354–6400, or Cynthia L. Clark, FinCEN (703) 905–3590. A searchable guide to the Code of Federal Regulations can be found on the Internet at: *http://www.access.gpo.gov/nara/cfr.*

SUPPLEMENTARY INFORMATION: The information collected and retained under the regulations addressed in this notice and the information collected on Form TD F 90–22.1 (as well as other Bank Secrecy Act reporting and recordkeeping requirements that are *not* the subject of this notice) assist federal, state and local law enforcement in the identification, investigation, and prosecution of individuals involved in money laundering, the financing of terrorism, tax evasion, narcotics trafficking, organized crime, fraud, embezzlement and other crimes. The information also assists in tax collection

and examination and other regulatory matters.[1]

1. *Title*: Reports of transactions in currency (31 CFR 103.22(b)(1), 103.27(a), 103.27(d) and 103.28).

OMB Number: 1506–0009.

Abstract: Financial institutions must report transactions in currency that exceed $10,000 (31 CFR 103.22(b)(1)).[2] Before concluding any transaction with respect to which a report must be filed under section 103.22(b)(1), a financial institution must verify and record the name and address of the individual presenting the transaction and must record certain information about any person on whose behalf the transaction is conducted (31 CFR 103.28). Records of reports must be maintained for 5 years (31 CFR 103.27(a)).

Current Action: There is no change to the existing regulations.

Type of Review: Extension of a currently approved information collection.

Affected Public: Businesses or for-profit institutions, and non-profit institutions.

Burden: The burden for the reporting requirement in the regulations is reflected in the burden for FinCEN Form 104. The estimated number of respondents is 19,000. The estimated annual number of responses is 12,400,000, with a reporting average of 19 minutes per response and a recordkeeping average of 5 minutes per response. The estimated total for the annual burden hours is 4,960,000.

2. *Title:* Reports of transactions in currency (31 CFR 103.22(b)(2)), 103.27(a), 102.27(d), and 103.28).

OMB Number: 1506–0009.

Abstract: Casinos (and card clubs) must report transactions in currency that exceed $10,000 in one business day (31 CFR 103.22(b)(2)). Before concluding any transaction with respect to which a report must be filed under section 103.22(b)(1), a casino must verify and record the name and address of the individual presenting the transaction and must record certain information about any person on whose behalf the transaction is conducted (31 CFR 103.28). Records of reports must be maintained for 5 years (31 CFR 103.27(a)).

Current Action: There is no change to the existing regulations.

Type of Review: Extension of a currently approved information collection.

Affected Public: Businesses or for-profit institutions.

Burden: The burden for the reporting requirement in the regulations is reflected in the burden for FinCEN Form 103. The estimated number of respondents is 550. The estimated number of responses is 198,000, with a reporting average of 19 minutes per response and a recordkeeping average of 5 minutes per response. The estimated total for the annual burden hours is 79,200.

3. *Title:* Transactions of exempt person (31 CFR 103.22(d), 103.27(a) and 103.27(d)).

OMB Number: 1506–0009.

Abstract: Banks and other depository institutions (''banks'') may exempt from reporting under 31 CFR 103.22(b)(1) currency transactions exceeding $10,000 by certain customers referred to as eligible persons (31 CFR 103.22(d)). Banks exempt these customers by filing a form designating them as exempt persons and maintaining certain records necessary to document the basis for the exemption and compliance with the exemption procedures of section 103.22(d). For two categories of eligible persons—non-listed businesses and payroll customers—the exemption must be renewed every two years by certifying the application of the bank's suspicious activity reporting program to those customers and recording any changes in control of those customers on a newly filed designation form. Records must be maintained for five years.

Current Action: There is no change to the existing regulations.

Type of Review: Extension of a currently approved information collection.

Affected Public: Businesses or for-profit institutions, and non-profit institutions.

Burden: The burden for the reporting requirement in the regulations is reflected in the burden for Form TD F 90–22.53. The estimated number of respondents is 19,000. The estimated number of responses is 180,000 with a combined reporting and recordkeeping average of 70 minutes per response. The estimated total for annual burden hours is 210,000

4. *Title:* Reports of transportation of currency or monetary instruments (31 CFR 103.23 and 103.27).

OMB Number: 1506–0009.

Abstract: A person must file a report with Treasury if the person knowingly transports currency or monetary instruments of more than $10,000 at one time into or out of the United States, or receives currency or monetary instruments of more than $10,000 at one time transported into the United States from or through a place outside the United States (31 CFR 103.23 and 103.27).

Current Action: There is no change to the existing regulations.

Type of Review: Extension of a currently approved information collection.

Affected Public: Individuals, businesses or for-profit institutions, and non-profit institutions.

Burden: The burden for the reporting requirement in the regulations is reflected in the burden for FinCEN Form 105. The estimated number of responses is 180,000, with a reporting average of 11 minutes per response. The estimated total for the annual burden hours is 33,000.

5. *Title:* Reports of foreign financial accounts (31 CFR 103.24, 103.27(d), 103.32) and Form TD F 90–22.1, Report of Foreign Bank and Financial Accounts.

OMB Number: 1506–0009.

Form Number: TD F 90–22.1.

Abstract: Every person having a financial interest in, or signature authority over, a foreign account over $10,000 must file a report of the account (31 CFR 103.24, 103.27(d)) and must maintain records that contain the name in which the account is maintained, the number of the account, the name and address of the foreign bank, and the type of account and maximum value of the account (31 CFR 103.32).

Current Action: There is no change to the existing regulations or the form.

Type of Review: Extension of a currently approved information collection.

Affected Public: Individuals, businesses or other for-profit institutions, and non-profit institutions.

Burden: The burden for the reporting requirement in the regulations is reflected in the burden for Form TD F 90–22.1. The estimated number of respondents is 205,000. The estimated number of responses is 205,000, with a reporting average of 10 minutes per response and a recordkeeping average of 5 minutes per response. The estimated total for annual burden hours is 51,250.

6. *Title:* Reports of transactions with foreign financial agencies (31 CFR 103.25).

OMB Number: 1506–0009.

Abstract: Treasury may, by regulation, require specified financial institutions to report transactions by persons with designated foreign financial agencies.

Current Action: There is no change to the existing regulation.

[1] The information collections addressed in this notice are currently covered by one OMB Control Number—1506—0009. FinCEN intends to ask OMB to assign specific control numbers to the various information collections so that the administration of the information collections will be simpler in the future.

[2] As explained below, 31 CFR 103.22(b)(2) requires casinos (and card clubs) to report these transactions.

Type of Review: Extension of a currently approved information collection.

Affected Public: Businesses or for-profit institutions, and non-profit institutions.

Burden: The estimated number of respondents per year is 1. The estimated number of responses is 1, with a reporting burden of 1 hour per respondent, for a total annual burden of 1 hour.[3]

7. *Title:* Reports of certain domestic coin and currency transactions (31 CFR 103.26 and 103.33(d)).

OMB Number: 1506–0009.

Abstract: Upon a finding that additional reporting or recordkeeping is necessary to carry out the purposes, or prevent the evasion, of the Bank Secrecy Act, Treasury may issue an order requiring financial institutions or groups of financial institutions in certain geographic locations to report certain transactions in prescribed amounts for a limited period of time (31 CFR 103.26). Financial institutions subject to a geographic targeting order must maintain records for such period of time as the order requires but not more than 5 years (31 CFR 103.33(d)).

Current Action: There is no change to the existing regulation.

Type of Review: Extension of a currently approved information collection.

Affected Public: Businesses or for-profit institutions, and non-profit institutions.

Burden: The estimated number of respondents per year is 3,200. The estimated number of responses is 17,000, with a reporting burden of 19 minutes per response and a recordkeeping burden of 5 minutes per response. The total estimated annual burden is 6,800 hours.[4]

8. *Title:* Purchases of bank checks and drafts, cashier's checks, money orders and traveler's checks (31 CFR 103.29 and 31 CFR 103.38).

OMB Number: 1506–0009.

Abstract: Financial institutions must maintain records of certain information related to the sale of bank checks and drafts, cashiers checks, money orders, or traveler's checks when the sale involves currency between $3,000–$10,000. The records must be maintained for a period of five years and made available to Treasury upon request.

Current Action: There is no change to the existing regulation.

Type of Review: Extension of a currently approved information collection.

Affected Public: Businesses or for-profit institutions, and non-profit institutions.

Burden: The estimated number of recordkeepers is 60,900. The average burden per recordkeeper is 7.5 hours, for a total estimated annual recordkeeping burden of 456,750 hours.

9. *Title:* Records to be made and retained by financial institutions (31 CFR 103.33 and 103.38).

OMB Number: 1506–0009.

Abstract: Each financial institution must retain an original or copy of records related to extensions of credit in excess of $10,000 (other than those secured by real property), and records related to transfers of funds, currency, other monetary instruments, checks, investment securities, or credit of more than $10,000 to or from the United States (31 CFR 103.33(a)–(c)). Banks and non-bank financial institutions must also maintain records related to, and include certain information as part of funds transfers or transmittals of funds involving more than $3,000 (31 CFR 103.33(e)–(f), and 103.33(g)). The required records must be maintained for five years (31 CFR 103.38).

Current Action: There is no change to the existing regulation.

Type of Review: Extension of a currently approved information collection.

Affected Public: Businesses or for-profit institutions, and non-profit institutions.

Burden: 31 CFR 103.33(a)–(c). The estimated number of recordkeepers is 22,900. The estimated annual recordkeeping burden per recordkeeper is 50 hours, for a total estimated annual recordkeeping burden of 1,145,000 hours.

31 CFR 103.33(e)–(f). The estimated number of recordkeepers is 35,500. The estimated annual recordkeeping burden per recordkeeper is 16 hours, for a total estimated annual recordkeeping burden of 568,000.

31 CFR 103.33(g). The estimated number of recordkeepers is 35,500. The estimated annual recordkeeping burden per recordkeeper is 12 hours, for a total estimated annual recordkeeping burden of 426,000.

10. *Title:* Additional records to be made and retained by banks (31 CFR 103.34 and 103.38).

OMB Number: 1506–0009.

Abstract: A bank must retain an original or copy of certain documents, as specified in section 103.34. The required records must be maintained for five year?

Current Action: There is no change to the existing regulation.

Type of Review: Extension of a currently approved information collection.

Affected Public: Businesses or for-profit institutions, and non-profit institutions.

Burden: The estimated number of recordkeepers is 22,900. The estimated annual recordkeeping burden per recordkeeper is 100 hours for a total annual recordkeeping burden of 2,290,000 hours.

11. *Title:* Additional records to be made and retained by brokers or dealers in securities (31 CFR 103.35 and 103.38).

OMB Number: 1506–0009.

Abstract: A broker or dealer in securities must retain an original or copy of certain documents, as specified in section 103.35. The required records must be maintained for five years (31 CFR 103.38).

Current Action: There is no change to the existing regulation.

Type of Review: Extension of a currently approved information collection.

Affected Public: Business and other for-profit institutions.

Burden: The estimated number of recordkeepers is 8,300. The estimated annual recordkeeping burden per recordkeeper is 100 hours, for a total estimated annual recordkeeping burden of 83,000 hours.

12. *Title:* Additional records to be made and retained by casinos (31 CFR 103.36 and 103.38).

OMB Number: 1506–0009.

Abstract: Casinos (and card clubs) must make and retain a record of the name, permanent address and taxpayer identification number of each person who deposits funds with the casino, opens an account at the casino, or to whom the casino extends a line of credit (and maintain a list, available to the Secretary upon request, of the names and addresses of person who do not furnish a taxpayer identification number), and must retain the original or a copy of certain documents, as specified in section 103.36 (31 CFR 103.36(a)&(b)(1)–(8)). Casinos must also maintain a list of transactions with customers involving certain instruments (31 CFR 103.36(b)(9))). Card clubs must maintain records of currency transactions by customers and records of activity at cages (31 CFR 103.36(b)(11)). Casinos that input, store, or retain required records on computer disk, tape or other machine readable media must maintain the records on

[3] Should FinCEN issue regulations under this authority, it will provide a burden estimate specific to those regulations.

[4] Although the burden is stated as an annual burden in accordance with the Paperwork Reduction Act, the estimated annual burden is not intended to indicate that there is a geographic targeting order in effect throughout a year or in each year.

such media (31 CFR 103.36(c)). Required records must be maintained for five years. (31 CFR 103.38).

Current Action: There is no change to the existing regulation.

Type of Review: Extension of a currently approved information collection.

Affected Public: Business and other for-profit institutions.

Burden: 31 CFR 103.36(a)&(b)(1)–(8). The estimated number of recordkeepers is 480. The estimated annual recordkeeping burden per recordkeeper is 100 hours, for a total estimated annual recordkeeping burden of 48,000.

31 CFR 103.36(b)(9). The estimated number of recordkeepers is 480. The estimated annual recordkeeping burden per recordkeeper is 7.5 hours, for a total estimated annual recordkeeping burden of 3,600 hours.

31 CFR 103.36(b)(11). The estimated number of recordkeepers is 62. The estimated number of transactions is 215,000 annually and the total estimated annual recordkeeping burden is 686 hours.

31 CFR 103.36(c). The estimated number of respondents is 480. The estimated annual recordkeeping burden per recordkeeper is 4 hours, for a total estimated annual recordkeeping burden of 1,920 hours.

13. *Title:* Additional records to be made and retained by currency dealers or exchangers (31 CFR 103.37 and 103.38).

OMB Number: 1506–0009.

Abstract: A currency dealer or exchanger must make and maintain a record of the taxpayer identification number of certain persons for whom a transaction account is opened or a line of credit is extended, and must maintain a list containing the names, addresses, and account or credit line numbers of those persons from whom it has been unable to secure such information. A currency dealer or exchanger must retain the original or a copy of certain documents, as specified in section 103.37. The required records must be maintained for five years (31 CFR 103.38).

Current Action: There is no change to the existing regulation.

Type of Review: Extension of a currently approved information collection.

Affected Public: Business and other for-profit institutions.

Burden: The estimated number of recordkeepers is 2,300. The estimated annual recordkeeping burden per recordkeeper is 16 hours, for a total estimated annual recordkeeping burden of 368,000 hours.

14. *Title:* Nature of records and retention period (31 CFR 103.38).

OMB Number: 1506–0009.

Abstract: Records required to be retained by a financial institution under 31 CFR part 103 must be retained for 5 years, except for records or reports required under section 103.26 which shall be retained for the period of time specified in the targeting order imposing the recordkeeping or reporting requirement to which the particular retention period relates.

Current Action: There is no change to the existing regulation.

Type of Review: Extension of a currently approved information collection.

Affected Public: Businesses or for-profit institutions, and non-profit institutions.

Burden: The burden for this regulation is reflected in the reporting and recordkeeping provisions of 31 CFR part 103.

15. *Title:* Special rules for casinos (31 CFR 103.64, 103.36(b)(10), and 103.38).

OMB Number: 1506–0009.

Abstract: This section provides special rules for casinos, including the requirement that casinos maintain a written compliance program.

Current Action: There is no change to the existing regulation.

Type of Review: Extension of a currently approved information collection.

Affected Public: Business and other for-profit institutions.

Burden: The estimated number of recordkeepers is 480. The estimated annual recordkeeping burden per recordkeeper is 100, for a total estimated annual recordkeeping burden of 48,000 hours.

16. *Title:* Administrative rulings (31 CFR 103.81–87).

OMB Number: 1506–0009.

Abstract: These sections address administrative rulings under the Bank Secrecy Act. They explain how to submit a ruling request (103.81), how nonconfoming requests are handled (103.82), how oral communications are treated (103.83), how rulings are issued (103.85), how rulings are modified or rescinded (103.86), and how information [in connection with a ruling may be disclosed (103.87).

Current Action: There is no change to the existing regulation.

Type of Review: Extension of a currently approved information collection.

Affected Public: Individuals, businesses or for-profit institutions, and non-profit institutions.

Burden: The estimated number of responses is 60 annually, with a burden of 1 hour per submission, for a total annual burden of 60 hours. The following paragraph applies to all the collections of information addressed in this notice:

An agency may not conduct or sponsor, and a person is not required to respond to, a collection of information unless the collection of information displays a valid OMB control number. Records required to be retained under the Bank Secrecy Act must be retained for five years. Generally, information collected pursuant to the Bank Secrecy Act is confidential, but may be shared as provided by law with regulatory and law enforcement authorities.

Request for Comments: Comments submitted in response to this notice will be summarized and/or included in the request for OMB approval. All comments will become a matter of public record. Comments are invited on: (a) Whether the collection of information is necessary for the proper performance of the functions of the agency, including whether the information shall have practical utility; (b) the accuracy of the agency's estimate of the burden of the collection of information; (c) ways to enhance the quality, utility, and clarity of the information to be collected; (d) ways to minimize the burden of the collection of information on respondents, including through the use of automated collection techniques or other forms of information technology; and (e) estimates of capital or start-up costs and costs of operation, maintenance and purchase of services to provide information.

Dated: December 14, 2004.

William J. Fox,

Director, Financial Crimes Enforcement Network.

[FR Doc. 04–27738 Filed 12–17–04; 8:45 am]

BILLING CODE 4810–02–P

DEPARTMENT OF THE TREASURY

RIN 1505–AA87

Financial Crimes Enforcement Network; Agency Information Collection Activities; Proposed Collection; Comment Request

AGENCY: Financial Crimes Enforcement Network (FinCEN), Treasury.

ACTION: Notice and request for comments.

SUMMARY: In order to comply with the requirements of the Paperwork Reduction Act of 1995, FinCEN intends to submit the information collections addressed in this notice for a three-year extension of approval by the Office of

Management and Budget (''OMB''). Prior to submission of the extension request, FinCEN is soliciting comment on those information collections 31 CFR 103.177.

DATES: Written comments should be received on or before February 18, 2005.

ADDRESSES: You may submit comments, identified by 1505–AA87, by any of the following methods:

- Federal e-rulemaking portal: *http://www.regulations.gov.* Follow the instructions for submitting comments.
- E-mail: *regcomments@fincen.treas.gov.* Include RIN 1505–AA87 in the subject line of the message.
- Mail: FinCEN, P.O. Box 39, Vienna, VA 22183. Include RIN 1505–AA87 in the body of the text.

Instructions: It is preferable for comments to be submitted by electronic mail because paper mail in the Washington, DC, area may be delayed. Please submit comments by one method only. All submissions received must include the agency name and the Regulatory Information Number (RIN) for this rulemaking. All comments received will be posted without change to *http://www.fincen.gov*, including any personal information provided. Comments may be inspected at FinCEN between 10 a.m. and 4 p.m., in the FinCEN reading room in Washington, DC. Persons wishing to inspect the comments submitted must request an appointment by telephoning (202) 354–6400 (not a toll-free number).

FOR FURTHER INFORMATION CONTACT: Office of Regulatory Programs, FinCEN, (202) 354–6400; and Office of Chief Counsel, FinCEN, at (703) 905–3590 (not toll-free numbers).

SUPPLEMENTARY INFORMATION: The Bank Secrecy Act (''BSA''), Titles I and II of Public Law 91–508, as amended, codified at 12 U.S.C. 1829(b), 12 U.S.C. 1951–1959, and 31 U.S.C. *et seq.*, authorizes the Secretary of the Treasury, *inter alia*, to issue regulations requiring records and reports that are determined to have a high degree of usefulness in criminal, tax and regulatory matters. Title III of the USA PATRIOT Act of 2001, Pub. L. 107–56, included certain amendments to the anti-money laundering provisions of Title II of the BSA, 31 U.S.C. 5311 *et seq.*, which are intended to aid in the prevention, detection and prosecution of international money laundering and terrorist financing. Regulations implementing Title II of the BSA appear at 31 CFR part 103. The authority of the Secretary of the Treasury to administer Title II of the BSA has been delegated to the Director of FinCEN.

The information collected and retained under the regulation addressed in this notice assist federal, state, and local law enforcement as well as regulatory authorities in the identification, investigation and prosecution of money laundering and other matters. In accordance with the requirements of the Paperwork Reduction Act of 1995, 44 U.S.C. 3506(c)(2)(A), and its implementing regulations, the following information is presented concerning the information collection below.[1]

Title: Correspondent Accounts for Foreign Shell Banks; Recordkeeping and Termination of Correspondent Accounts for Foreign Banks (31 CFR 103.177).

OMB Number: 1505–AA87.

Abstract: Covered financial institutions are prohibited from maintaining correspondent accounts for foreign shell banks (31 CFR 103.177(a)(1)). Covered financial institutions that maintain correspondent accounts for foreign banks must maintain records of owner(s) of the foreign bank and the names and address of a person residing in the United States who is authorized to accept service of legal process for the foreign bank. (31 CFR 103.177(a)(2)). Covered financial institutions may satisfy these requirements by using the sample certification and re-certification forms contained in Appendices A and B of this regulation. Records of documents relied upon by a financial institution for purposes of this regulation must be maintained for at least five years after the date that the financial institution no longer maintains a correspondent account for such foreign bank (31 CFR 103.177(e)).

Current Action: There is no change to the existing regulations.

Type of Review: Extension of a currently approved collection notice.

Affected Public: Businesses or for profit institutions, and non-profit institutions.

Burden: The estimated average annual reporting burden associated with Appendix A is 20 hours per respondent; the estimated average annual reporting burden associated with Appendix B is 5 hours per respondent; and the estimated average recordkeeping burden associated with section 103.177(e) is 9 hours per recordkeeper.

The following paragraph applies to the collection of information addressed in this notice. An agency may not conduct or sponsor, and a person is not required to respond to, a collection of information unless the collection of information displays a valid OMB control number. Records required to be retained under the BSA must be retained for five years. Generally, information collected pursuant to the BSA is confidential, but may be shared as provided by law with regulatory and law enforcement authorities.

Request for Comments: Comments submitted in response to this notice will be summarized and/or included in the request for OMB approval. All comments will become a matter of public record. Comments are invited on: (a) Whether the collection of information is necessary for the proper performance of the functions of the agency, including whether the information shall have practical utility; (b) the accuracy of the agency's estimate of the burden of the collection of information; (c) ways to enhance the quality, utility, and clarity of the information to be collected; (d) ways to minimize the burden of the collection of information on respondents, including through the use of automated collection techniques or other forms of information technology; and (e) estimates of capital or start-up costs and costs of operation, maintenance and purchase of services to provide information.

William J. Fox,

Director.

[FR Doc. 04–27747 Filed 12–17–04; 8:45 am]

BILLING CODE 4810–02–P

[1] OMB Control Number 1505–AA87 currently covers the information collection addressed in this notice. FinCEN intends to ask OMB to re-assign the control number in this collection to the 1506 series consistent with other rules issued under Title II of the Bank Secrecy Act.

DEPARTMENT OF THE TREASURY

Office of the Comptroller of the Currency

[Docket No. 04–25]

FEDERAL RESERVE SYSTEM

[Docket No. OP–1218]

FEDERAL DEPOSIT INSURANCE CORPORATION

DEPARTMENT OF THE TREASURY

Office of Thrift Supervision

[No. 2004–57]

Shared National Credit Data Collection Modernization

AGENCIES: Office of the Comptroller of the Currency, Treasury (OCC); Board of Governors of the Federal Reserve System (Board), the Federal Deposit Insurance Corporation (FDIC); and the Office of Thrift Supervision (OTS) as an assisting agency.

ACTION: Notice for public comment.

SUMMARY: The Federal Banking Agencies (Board, FDIC, OCC, and OTS, collectively referred to as ''the Agencies'') are seeking comment on proposed changes to the examination data collected in support of the Shared National Credit Program (Program). The Agencies propose to standardize and expand the data collection to improve the efficiency and effectiveness of Shared National Credit (SNC) examinations. By standardizing and expanding the collection of data, the Agencies will be able to use advanced credit risk analytics that will be beneficial to the reporting banks and the Agencies. The proposed changes are warranted based on the increasing sophistication of banks' risk management practices and the complexity of credit markets. Going forward, the Program also plans to take advantage of current information technologies. The Agencies plan to implement the changes beginning with the 2007 SNC examinations, employing data as of December 31, 2006.

DATES: Comments must be submitted on or before February 15, 2005.

ADDRESSES: Because the Agencies will jointly review all of the comments submitted, interested parties may send comments to any one of the Agencies without the need to send comments (or copies) to all of the Agencies. Postal service in the Washington, DC area and at the Agencies is subject to delay, so please consider submitting your comments by e-mail or fax. Commenters are encouraged to use the title ''SNC Program Modernization'' to facilitate the organization and distribution of comments among the Agencies. Interested parties may submit comments to:

OCC: You should include OCC and Docket Number 04–25 in your comment. You may submit comments by any of the following methods:

- *Federal eRulemaking Portal: http://www.regulations.gov.* Follow the instructions for submitting comments.
- *OCC Web site: http://www.occ.treas.gov.* Click on ''Contact the OCC,'' scroll down and click on ''Comments on Proposed Regulations.''
- *E-mail address: regs.comments@occ.treas.gov.*
- *Fax:* (202) 874–4448.
- *Mail:* Office of the Comptroller of the Currency, 250 E Street, SW., Mail Stop 1–5, Washington, DC 20219.
- *Hand Delivery/Courier:* 250 E Street, SW., Attn: Public Information Room, Mail Stop 1–5, Washington, DC 20219.

Instructions: All submissions received must include the agency name (OCC) and docket number or Regulatory Information Number (RIN) for this notice of proposed rulemaking. In general, OCC will enter all comments received into the docket without change, including any business or personal information that you provide. You may review comments and other related materials by any of the following methods:

- *Viewing Comments Personally:* You may personally inspect and photocopy comments at the OCC's Public Information Room, 250 E Street, SW., Washington, DC. You can make an appointment to inspect comments by calling (202) 874–5043.
- *Viewing Comments Electronically:* You may request e-mail or CD-ROM copies of comments that the OCC has received by contacting the OCC's Public Information Room at *regs.comments@occ.treas.gov.*
- *Docket:* You may also request available background documents and project summaries using the methods described above.

Board: You may submit comments, identified by Docket No. OP–1218 by any of the following methods:

- Agency Web site: *http://www.federalreserve.gov.* Follow the instructions for submitting comments at *http://www.federalreserve.gov/generalinfo/foia/ProposedRegs.cfm.*
- Federal eRulemaking Portal: *http://www.regulations.gov.* Follow the instructions for submitting comments.
- *E-mail: regs.comments@federalreserve.gov.* Include the docket number in the subject line of the message.
- *Fax:* (202) 452–3819 or (202) 452–3102.
- *Mail:* Jennifer J. Johnson, Secretary, Board of Governors of the Federal Reserve System, 20th Street and Constitution Avenue, NW., Washington, DC 20551.

All public comments are available from the Board's Web site at *http://www.federalreserve.gov/generalinfo/foia/ProposedRegs.cfm* as submitted, except as necessary for technical reasons. Accordingly, your comments will not be edited to remove any identifying or contact information. Public comments may also be viewed in electronic or paper form in Room MP–500 of the Board's Martin Building (20th and C Streets, NW.) between 9 a.m. and 5 p.m. on weekdays.

FDIC: You may submit comments by any of the following methods:

- *Agency Web site: http://www.FDIC.gov/regulations/laws/federal/propose.html.*Follow the instructions for submitting comments.
- *E-mail*: *comments@FDIC.gov.*
- *Mail:* Robert E. Feldman, Executive Secretary, Attention: Comments/Legal ESS, Federal Deposit Insurance Corporation, 550 17th Street, NW., Washington, DC 20429.
- *Hand Delivered/Courier:* The guard station at the rear of the 550 17th Street Building (located on F Street), on business days between 7 a.m. and 5 p.m.
- *Public Inspection*: Comments may be inspected and photocopied in the FDIC Public Information Center, Room 100, 801 17th Street, NW., Washington, DC, between 9 a.m. and 4:30 p.m. on business days.

Instructions: Comments received will be posted without change to *http://www.FDIC.gov/regulations/laws/federal/propose.html,* including any personal information provided.

OTS: You may submit comments, identified by No. 2004–57, by any of the following methods:

- *Federal eRulemaking Portal*: *http://www.regulations.gov.* Follow the instructions for submitting comments.
- *E-mail address*: *regs.comments@ots.treas.gov.* Please include No. 2004–57 in the subject line of the message and include your name and telephone number in the message.
- *Fax*: (202) 906–6518.
- *Mail*: Regulation Comments, Chief Counsel's Office, Office of Thrift Supervision, 1700 G Street, NW., Washington, DC 20552, Attention: No. 2004–57.
- *Hand Delivery/Courier*: Guard's Desk, East Lobby Entrance, 1700 G Street, NW., from 9 a.m. to 4 p.m. on business days, Attention: Regulation Comments, Chief Counsel's Office, Attention: No. 2004–57.

Instructions: All submissions received must include the agency name and No. 2004–57 for this *request for comment.* All comments received will be posted without change to the OTS Internet Site at *http://www.ots.treas.gov/pagehtml.cfm?catNumber=67&an=1,* including any personal information provided.

Docket: For access to the docket to read background documents or comments received, go to *http://www.ots.treas.gov/pagehtml.cfm?catNumber=67&an=1.*

In addition, you may inspect comments at the Public Reading Room, 1700 G Street, NW., by appointment. To make an appointment for access, call (202) 906–5922, send an e-mail to *public.info@ots.treas.gov,* or send a facsimile transmission to (202) 906–7755. (Prior notice identifying the materials you will be requesting will assist us in serving you.) We schedule appointments on business days between 10 a.m. and 4 p.m. In most cases,

appointments will be available the next business day following the date we receive a request.

FOR FURTHER INFORMATION CONTACT:

OCC: MaryAnn Nash, Counsel, Legislative and Regulatory Affairs Division (202) 874–5753; or Louise Francis, National Bank Examiner, Large Bank Supervision, (202) 874–1306; or Kevin Satterfield, Public Reference Room Assistant, Communications Division, 202–874–4700.

Board: Elaine Boutilier, Managing Senior Counsel, or Alye Foster, Senior Counsel, (202) 452–5289; or John T. Colwell, Senior Project Manager, Division of Bank Supervision and Regulation, (202) 728–5885. For users of Telecommunications Device for the Deaf (''TDD'') only, contact (202) 263–4869.

FDIC: William R. Baxter, Chief, Large Bank Section, Division of Supervision and Consumer Protection, (202) 898–8514 or *wbaxter@fdic.gov;* Cecilia L. Barry, Senior Financial Analyst, Large Bank Section, Division of Supervision and Consumer Protection, (202) 898–3506 or *cbarry@fdic.gov;* Rodney D. Ray, Counsel, Legal Division, (202) 898–3556 or *rray@fdic.gov;* or Leneta G. Gregorie, Counsel, Legal Division, (202) 898–3719 or *lgregorie@fdic.gov.*

OTS: David W. Tate, Manager, Examination Quality Review, (202) 906–5717.

SUPPLEMENTARY INFORMATION:

I. Introduction

The SNC Program is a cooperative initiative through which the Agencies examine and supervise shared national credits. A shared national credit is a lending commitment of $20 million or more that is held by three or more regulated lenders.

For the reasons explained in the discussion that follows, the Agencies have determined that their administration of the SNC Program could be improved, and the quality of the feedback we provide to banks in the SNC Program enhanced, by creating a single, shared SNC database and by standardizing and expanding the set of data we collect from certain banks that currently report data pursuant to the Program. Accordingly, this notice describes the changes to the reporting system that the Agencies contemplate and identifies the new data elements that the Agencies propose to collect. The proposed data elements are included in a chart appended to the notice. Immediately preceding the chart, the Agencies present a series of questions designed to elicit comment on the expanded program. Commenters' responses will help refine our thinking about the ultimate design of the expanded data collection process. Toward that end, the questions focus on the feasibility of providing the expanded information and on the effects and consequences of including particular new elements in the SNC reporting system. Commenters also are invited to suggest alternatives where appropriate.

Concurrently with this notice, the Board is publishing a separate Request for Information (RFI) to gather information from prospective contractors pertaining to system integration services to develop a common system solution for supporting the SNC Program.

Following our evaluation of the comments received in response to this notice and the RFI, the Agencies expect to develop a more detailed description of the new data collection process and to publish that description for additional comment. At that time, the Agencies will also solicit comment on burden estimates pursuant to the Paperwork Reduction Act. We anticipate that final changes to the SNC data collection process will be implemented through an interagency statement or similar issuance.

II. Background

The SNC Program has been an effective supervisory tool for over twenty-five years. In 2004, it covered approximately 7,500 facilities [1] to nearly 5,000 borrowers and represented committed exposure in excess of $1.5 trillion. The current objectives are to:

- Provide uniformity in approach and credit rating determinations,
- Gain efficiencies in risk analysis,
- Provide timely results to the reporting banks and Agencies, and
- Gather and analyze reporting bank and industry credit data.

Advancements in credit risk management and information technology have created an opportunity to improve the Agencies' ability to achieve these objectives going forward. In that regard, the Agencies propose to:

- *Standardize the SNC data collection system so that all Agencies collect the same data using the same data definitions,*
- *Expand SNC data collected from the banks that agent a significant volume of SNCs,*
- *Apply advanced credit risk analytics and benchmarking* [2] *techniques to common SNC borrowers, facilities, and reporting bank portfolios, and*
- *Provide reporting banks with feedback on their commonly held SNC portfolios across those metrics.*

The creation of a shared SNC database will improve the efficiency and accuracy of data submission by the reporting banks. Currently, the Federal Reserve and the OCC maintain separate SNC databases with slightly different data collection processes (the OCC also processes SNC data for the FDIC and OTS). A shared database and a common set of data definitions will allow for increased use of electronic data collection and will make the collection, reconciliation, and maintenance of SNC data more effective.

By expanding the data collected from the banks that agent a significant volume of SNCs, the Agencies will be able to develop and share useful credit risk information with them. Over time and as credit risk management techniques continue to evolve, reporting banks will want additional feedback from their primary Federal regulator on how their SNC portfolios compare with their peers. SNC benchmarking information will provide a unique reference point because comparable peer ratios on the internal credit risk estimates are currently not available.

III. Proposed Enhancements

The Agencies intend to standardize the SNC data collected from the reporting banks that serve as agent for at least 100 SNC facilities *and* have been identified as likely mandatory or opt-in Basel II banks [3] (*i.e.*, ''Expanded Reporters''). Banks that do not meet this criterion, but are able to provide the credit risk management data outlined in this proposal, could also voluntarily choose to participate as Expanded Reporters. All other reporting banks (*i.e.*, ''Basic Reporters'') would continue to submit data similar to the existing SNC reporting requirements. The Agencies also propose to clarify the data definitions and standardize the submission format to reduce ambiguity and automate the data collection process for those banks that are able to submit data electronically.

III.A. Basic Reporters

- Basic Reporters should see few changes outside of improved software and feedback reports from the Agencies.
- Basic Reporters would continue to provide data annually prior to the SNC

[1] The borrower receives funds from the lender by initiating a facility under the credit agreement. Essentially a loan, a facility might consist of a revolving, term, or other type of loan.

[2] Benchmarking references a standardized problem or test that serves as a basis for evaluation or comparison.

[3] See Risk-Based Capital Guidelines; Implementation of New Basel Capital Accord, 68 FR 45900 (Aug. 4, 2003).

examination period only on SNC facilities they agent.

• The data elements provided by Basic Reporters in the existing SNC Program would remain substantially unchanged. However, they would be subject to a common set of detailed definitions (*e.g.*, five or six digit NAICS codes would be required rather than the four (FRB) or five (OCC, FDIC, and OTS) that are currently requested).

• The Agencies would provide user-friendly software to the Basic Reporters to electronically transmit data.

• The Agencies would distribute identifiers (IDs) for borrowers and facilities agented by Basic Reporters (see the section on Regulatory IDs).

• A Basic Reporter would have the option to become an Expanded Reporter and receive benchmark comparisons as well.

III.B. Expanded Reporters

The following points highlight the primary changes that would affect Expanded Reporters.

• Expanded Reporters would report data on a quarterly basis instead of annually. Quarterly data submission will allow each Agency to provide more frequent feedback on the risk characteristics of SNC portfolios to the Expanded Reporters.

• Data would be collected on all Program borrowers and facilities (*i.e.*, agented and participated facilities) held by the Expanded Reporters.

• Expanded Reporters would report additional data elements.

The tables in Appendix I and II list the set of data elements required by the proposed changes to the Program.

III.C Regulatory IDs

Collecting and matching expanded data on the commonly held SNCs from agent reporting banks and participant reporting banks presents challenges. To ensure borrowers and facilities are uniformly identified, common identifiers (*i.e.*, Regulatory IDs) will need to be assigned. The Agencies are requesting assistance in the design, implementation, and administration of the Regulatory ID system.

The Agencies propose to create Regulatory IDs that the Expanded Reporters would distribute to participant reporting banks. The Regulatory IDs would accompany the data elements with each data submission by all Expanded Reporters that participate in the facility. Agencies would assign Regulatory IDs to current SNC borrowers and credits and provide those IDs to Expanded Reporters as they transition to the new system. Going forward, Expanded Reporters would request Regulatory IDs, as needed, on a post-origination basis.

The Agencies intend to distribute Regulatory IDs to Basic Reporters on an annual basis, following their annual data collection. The Agencies have not determined how an Expanded Reporter would provide data on facilities agented by Basic Reporters.

IV. Technology and Data Exchange

The Agencies propose to provide all reporting banks with a common set of detailed data element definitions that specify data quality standards as well as provide data validation and edit checks as part of the collection process. In addition, the new technologies will support seamless and secure electronic data exchanges between reporting banks and the Agencies. The Agencies also plan to use technologies for enhanced electronic reporting and feedback to reporting banks. Technologies and techniques to collect and distribute SNC data and reports are currently under investigation and include XML and XBRL taxonomies. The Agencies intend to implement an efficient data transmission process for each organization (*i.e.*, holding company level and all subsidiaries and affiliates) that prefers to submit and receive data centrally. Results could be mailed to one location, and data would be broken down by legal entity. These enhancements should improve the quality of information and the efficiency of the program.

V. Benefits of the Proposed Enhancements

The benefits of the proposed enhancements discussed in this notice would be significant to both reporting banks and the Agencies. The ability to quantify and compare institutional risk across the same syndicated exposure or portfolio of commonly held exposures (*i.e.*, ''benchmark'') is one important benefit of the proposed changes. With improved data, the Agencies will be able to benchmark the quality of broadly held credits in the banking industry and in individual reporting bank portfolios, and assist in the evaluation of credit risk metrics across commonly held portfolios of risk. Where appropriate, supervisors will be able to provide peer information on such items as capital intensity (*i.e.*, capital per dollar of exposure), weighted average Probability of Default (PD), weighted average Loss Given Default (LGD), and many other metrics on a reporting bank's total SNC portfolio (or by industry) versus peer basis. Analysis and benchmark comparisons may prompt examinations by the Agencies, particularly when reporting banks begin identifying emerging risks that other reporting banks have not. This information could also alert both the Agencies and reporting bank management to emerging trends or other pertinent factors.

Feedback relating to the range of risk metrics (*e.g.*, PDs, LGDs, and Exposures at Default) assigned by peer reporting banks to various industry sector exposures could help reporting banks evaluate and improve their internal risk systems. Such information could also improve the Agencies' understanding of internal risk assessment methodologies. Examples of this feedback might include:

• Feedback grouped by risk grade categories that would show median PDs, LGDs, or EADs for various industry segments.

• Borrower to borrower comparisons that would show a reporting bank how its PDs compared to the range of scores assigned to the same borrower by other banks.

• Credit comparisons, possibly grouped by facility type, size, industry, collateral, etc. that would help reporting banks compare their EAD and LGD values to the range of scores assigned by other banks to the same exposures.

• Accumulated actual credit loss measured over time, which could prove to be a valuable source of empirical information relating to LGD estimates.

The Agencies realize that there are various methods used to evaluate risk. Consequently, multiple conclusions could be drawn from the same information, yet still arrive at a sound and consistent risk assessment.

As supervisors and reporting banks gain experience with benchmarking and other data, the Agencies anticipate that the SNC on-site examination process will become more efficient. In the past, the Program has relied heavily upon examination of individual credit transactions. Going forward, examiners would continue to examine credits; however, they could focus their on-site examination on credits where portfolio analysis, market data and risk metrics indicate an increased risk or concentration. Moreover, with the expanded examination data, examiners should have a better understanding of a reporting bank's credit portfolio and macro credit trends.

VI. Conclusion

The benefits of the proposed changes to the Program discussed in this notice support the Agencies' goals to improve the data collection system, the efficiency and effectiveness of SNC examinations, and to provide the ability to perform and share advanced risk

analytics on the data. The effective implementation of a portfolio approach to credit risk is dependent on a timely and reliable flow of useful and relevant data in conjunction with benchmarking commonly held exposures and risk-focused examinations. These changes call for the reporting banks and Agencies to share more credit risk information than in the past. The ultimate goal of the proposed changes is to create a streamlined, risk-focused Program that recognizes and takes advantage of the significant advances in bank risk management practices, leverages current technology, and enables the production of meaningful credit risk information for the Agencies and reporting banks.

The questions in the next section address specific aspects of the proposal as well as request feedback on obstacles that the Agencies may not have anticipated.

The Agencies intend to use feedback from this preliminary proposal to develop a more detailed notice for comment prior to any final implementation of the proposed changes. This more detailed notice will, to the extent necessary, formally propose a new data collection and request comment on burden estimates.

VII. Questions

Feasibility of Reporting Banks Providing the Data and Establishing Which Reporting Banks Would Provide That Data

1. To perform benchmark analysis and provide meaningful feedback to the reporting banks, what data elements should the Agencies add, delete, or change from the Expanded Reporter list?

2. What are the effects on Expanded Reporters of providing data on credit participations?

a. Are there data elements that reporting banks would not be able to compile electronically without manual intervention?

b. Are there equivalent data elements that would be easier to provide?

3. For Basic Reporters, the Agencies anticipate that the effects of the proposal will be minimal. What effects, if any, do reporting banks see from the proposed changes?

a. The main change for Basic Reporters is improved data software. Are there changes to the current software that would be particularly helpful?

b. Which, if any, additional data items would be useful for the Agencies to collect, either to improve their understanding of the underlying transactions or to provide better feedback to the reporting banks?

c. What, if any, effects would the use of a common set of detailed definitions have on Basic Reporters? Are there other alternatives that could achieve the goals of reducing ambiguity and automating the data collection process?

4. Are the criteria ''agents 100 or more facilities *and* is a mandatory or opt-in Basel II bank'' reasonable to separate Expanded Reporters from Basic Reporters? If not, please provide an alternative.

5. Since more banks are using credit derivatives to manage their exposures, should the Program begin to collect data on credit derivatives in order to provide benchmarking feedback? Should the data files include credit derivative positions used to manage portfolio risk, along with the same risk metrics used for loans and other credit exposures?

Assignment and Maintenance of Unique Facility and Borrower Identifiers

6. Are there obstacles to the Agencies' proposal to assign, distribute, and maintain Regulatory IDs and, if so, what are they?

a. Should the Agencies distribute Regulatory IDs directly to participants instead of relying on the Expanded Reporter Agent banks to do so?

b. Should Basic Reporters also distribute Regulatory IDs to their participants? Are credit participations held by Basic Reporters' numerous enough to provide useful, relevant feedback?

c. Are there existing or planned commercial systems that might help uniquely identify facilities and borrowers in place of the process proposed here?

d. Would quarterly batch submission and Regulatory ID feedback for Expanded Reporters be preferable or would those banks prefer to request the Regulatory IDs throughout the year as deals are completed?

7. Which technologies would best support the reporting banks in requesting Regulatory IDs?

Feasibility of Data Exchange, Data Definitions, and Selecting Data Exchange Technologies

8. For both Basic and Expanded Reporters, the Agencies propose to define standard data requirements to support the secure file exchanges, and utilize web-based data exchanges, such as XML and XBRL taxonomies and related secure technologies, to exchange SNC examination data.

a. Is there an alternative to XML and XBRL taxonomies and related secure technologies to collect SNC examination data that would be superior?

b. Would it be feasible to extend existing data exchange technologies, conduits, and processes, such as those used for the FFIEC Call Reporting, to collect SNC data?

9. Do reporting banks store sufficient information in their databases to electronically identify a SNC according to the current criteria—$20 million or more with three or more lenders regulated by the Agencies?

a. Would reporting banks need a resource to determine if the Agencies regulate a lender?

b. Would other criteria help reporting banks identify SNCs and submit data electronically?

c. Would a larger data feed to the Agencies, which the Agencies would then screen for SNC criteria and then extract SNC facilities, be easier for reporting banks to administer?

Additional Issues Related to the Delivery of Reports and Data to Reporting Banks

10. Assuming that the proposed list of data elements is adopted, how could that data be best presented to provide value to Basic and Expanded Reporters (*i.e.*, what views would be most advantageous)?

a. Alternatively, should the Agencies simply provide raw data tables to support bank-generated reports?

b. Will your reporting bank be able to receive the feedback data and reports electronically by the proposed 2007 implementation date?

11. Are there any unintended consequences that might arise from the use of this comparative information?

Additional Questions

12. The Agencies currently ask reporting banks to provide the name, city, and state for SNC borrowers. This has often not been enough information to clearly identify borrowers in the SNC database. The Agencies are looking for additional data that reporting banks might provide to help identify their borrowers more clearly (*e.g.*, stock tickers, taxpayer identification numbers, CUSIP numbers, MKMV's PIDs, etc).

a. Which of these additional data elements would be most useful for this project?

b. What are the minimum data required to clearly identify borrowers and facilities?

c. Which, if any, of these items do reporting banks store electronically?

d. Is the proposal to require submission of at least one of these items reasonable?

13. Over the past two decades, some of the industry's largest losses involved credits extended to groups of related borrowers.

a. How are reporting banks identifying groups of related borrowers in their own systems?

b. What data could participating reporting banks provide to help identify related borrowers in SNC credits?

c. Could reporting banks electronically transmit data on guarantors for credits, sponsors, or other related and relevant parties?

14. Could the reporting banks provide entries tracking the resolution of credits over time, such as amounts charged off or sales of assets since the last data submission?

15. The data submission software currently in use (OSCAR and SNC Reporting Application) does not easily support aggregated reporting of SNC information for all of a reporting bank's related entities. Should the Agencies design software to permit aggregate, single-point, reporting of SNC data for a reporting bank? Should electronic data file submission also allow this type of reporting?

Appendix I

DATA ELEMENTS FOR EXPANDED REPORTERS

Data element (''N'' denotes data that is not collected in the current program)	Comments	A/P* (Agent/participant)
Name and address of Borrower and Agent Bank	Full, legal name as it appears in the corporate charter, and State, ZIP, and country.	AP
Name and address of the Review Bank, if any	A ''review'' bank is designated in two situations: by the agent when it wishes to identify a location other than its headquarters for examination of the credit files by Agency supervisors, or by the supervisors when the agent is a non-regulated bank and the supervisors wish to examine the transaction. In the latter case, the supervisors will designate one of the regulated participant banks as the ''review'' bank.	A
RegIDs of the Borrower and Agent Bank	The Regulatory IDs (''RegIDs'') of the Borrower and the Agent bank are currently referred to as the borrower's and agent bank's ''RSSD#''. This document proposes to expand the use of ''RegIDs'' to facilitate linkage of agent bank and participant bank information, and the RSSD system may, or may not, be used in the future for this purpose.	AP
RegID of the Review Bank, if any	The ''RegID'' of the Review Bank is currently referred to as the review bank's ''RSSD#.'' The RSSD system may, or may not, be used in the future for this purpose.	A
Industry Code (NAICS)	2002 North American Industrial Classification System (NAICS) code number reflecting the borrower's business activity. Note that although this data element is currently provided, this document proposed to increase the number of digits required to five or six (from four required by the FRB and five requested by the OCC/FDIC/OTS), which is consistent with the industry code requirements for filers of Form FR Y–10.	A
Parent Identification (N)	Name, Address, and Industry information for Parent Organization. If the reporting bank does not store the legal parent, or better yet the ultimate parent company in a multi-tier structure, then reporting banks would provide the name that they use to aggregate related exposures.	AP
Reporting bank's internal Facility ID	Reporting bank's internal facility number. Helps examiners identify facilities in bank records.	AP
RegID of the Facility	The ''RegID'' of the facility is currently referred to as the ''Credit Number'' and is assigned by the Agencies. The ''Credit Number'' identifier would be replaced by the proposed ''RegID'' system, which would facilitate linkage of agent bank and participant bank information.	AP
Facility Origination Date	Date the facility originated. Permits analysis of facilities by ''vintage'' to identify underwriting trends.	A
Most Recent Renewal Date	Currently provided by FRB reporting banks only. Date the facility was last renewed or reviewed to confirm the risk rating.	A
Facility Maturity Date	Date by which all utilizations must be repaid (*i.e.*, not the latest drawdown date, but the date by which all drawings must be repaid).	A
Facility Committed Exposure	Total facility availability legally committed to the borrower as of the date of the data submission. Includes the *total* facility amount, not just the portion retained by the agent reporting bank (if any)—the agent bank's portion of the total exposure would be reported in ''Participant bank Share of Committed Exposure'' below.	A
Facility Utilized Exposure	Total utilized amount, including off-balance sheet instruments (*e.g.*, LCs), as of the date of the data submission. Includes the *total* facility utilization, not just the portion retained by the agent bank (if any)— the agent bank's portion of the total utilization is a new data element that would be reported in ''Participant bank Share of Utilized Exposure'' below.	A
Borrower Risk Rating (N)	Risk rating assigned to the borrower	AP
Borrower PD—Probability of Default (Reg) (N)	PD used for regulatory capital purposes (after any guarantor effect)	AP
Facility EAD—Exposure at Default (Reg) (N)	EAD used for regulatory capital purposes	AP
Facility LGD—Loss Given Default (Reg) (N)	LGD used for regulatory capital purposes (after any guarantor effect)	AP
Facility EL—Expected Loss (Reg) (N)	EL using the PD, EAD, and LGD for regulatory capital purposes (after any guarantor impact).	AP
Facility Capital (Reg) (N)	Regulatory capital applicable to the facility (after any guarantor effect)	AP
Guarantor Name and stand alone PD, and guaranty amount (N).	To be submitted *only* if the guarantor's attributes are modifying the stand-alone characteristics of the borrower's PD or facility LGD. The parameter that was mitigated (*i.e.*, PD or LGD) will also be provided.	AP

DATA ELEMENTS FOR EXPANDED REPORTERS—Continued

Data element (''N'' denotes data that is not collected in the current program)	Comments	A/P* (Agent/participant)
At least one of the following (N): Taxpayer ID# (TIN), CUSIP (borrower), Stock Ticker, MKMV's ''PID'', LPC's Loan ID# (LIN).	A corroborating variable to identify the borrower in the event of ambiguity in the other data elements.	AP
Participant bank Share of Utilized Exposure	In the current Program, the agent bank submits the committed exposure for each participant bank. As a new data element, the Agent bank would also be asked to provide the utilized exposure for each participant bank. Additionally, each participant bank would be asked to submit its utilized exposure, which would be linked to the data provided by the agent bank using the proposed RegID# system.	AP
Cumulative Facility Charge offs (N)	Supports reconciliation and analysis of risk exposures over time	AP
Facility collateral type (*e.g.*, A/R, Equip) (N)	Supports LGD analysis	A
# Days Principal or Interest Past Due (N)	Distress indicator/nonaccrual trigger	A
Reportable SNC Flag (N)	Identifies the current quarter as that in which a borrower no longer qualifies as a SNC, and notifies users that the facility will not appear in future data submissions.	A
Participant bank names and addresses	In the current Program, the agent reporting bank submits the full, legal name of each participant bank, and its State, Zip, and country, and would continue to do so under this proposal. Each participant bank would also provide its name and address (in addition to other data elements as noted), which would be used to supplement linkage of agent bank and participant bank information through the new RegID system.	AP
RegID of each Participant bank	The ''RegID'' of a participant bank is currently referred to as the participant bank's ''RSSD''#. Currently the agent bank submits the RegID (RSSD#) of each participant bank, and would continue to do so under this proposal. Each participant bank would also provide its RegID# (in addition to other data elements as noted), which would be used to link agent bank and participant bank information. If the agent bank is also a participant bank, it would use the same RegID to report both its agency and its participation.	AP
Participant bank Share of Committed Exposure	In the current Program, the agent bank submits the committed exposure for each participant bank. Additionally, each participant bank would be asked to submit its committed exposure, which would be linked to the data provided by the agent bank using the proposed RegID system.	AP
Facility Type	Generic description of the facility (*e.g.*, revolver, term)	A
Facility Purpose	Generic description of purpose (*e.g.*, purchase equipment, provide operating funds).	A
Facility Risk Rating	Facility rating using the reporting bank's risk rating system	AP
% Pass	% of committed exposure rated Pass (*i.e.*, translation of the reporting bank's risk rating into the regulatory risk rating system). Under the current Program, this is reported by the agent bank and covers the entire facility amount (''Facility Committed Exposure'') using the agent bank's credit evaluation. Under this proposal, each participant bank (including the agent bank) would report the ''% Pass'' but only for their ''Participant bank Share of Committed Exposure'' (see above).	AP
% Special Mention	% of committed exposure rated Special Mention—see ''% Pass'' above for a more detailed explanation of expected reporting.	AP
% Substandard	% of committed exposure rated Substandard—see ''% Pass'' above for a more detailed explanation of expected reporting.	AP
% Doubtful	% of committed exposure rated Doubtful—see ''% Pass'' above for a more detailed explanation of expected reporting.	AP
% Loss	% of committed exposure rated Loss—see ''% Pass'' above for a more detailed explanation of expected reporting.	AP
Nonaccrual Indicator	Yes/No	AP
Nonaccrual Date	First day for which interest was no longer accrued as income	AP
Internal Watch Indicator	Currently provided only by FRB reporting banks. On the bank's watch list—Yes/No.	AP
Name of Responsible Account Officer	Account officer that examiners could contact to discuss the credit	A
Phone Number of Responsible Account Officer	Account officer's external phone number	A
Department Handling Account	Currently provided only by OCC reporting banks. Name of the business unit that is responsible for monitoring the borrower's performance and credit quality.	A

* *Data to be provided for Agented (A) and/or Participated (P) facilities. Readers should also note that, for purposes of this document, an agent reporting bank is also a participant reporting bank if the agent reporting bank retains credit exposure.*

Appendix II

DATA ELEMENTS FOR BASIC REPORTERS

Data element ("N" denotes data that is not collected in the current program)	Comments
Name and address of Borrower and Agent reporting bank.	Full, legal name as it appears in the corporate charter, and State, ZIP, and country.
Name and address of the Review Bank, if any	Normally the same as the agent bank, a "review" bank differs from the agent bank in two situations: when the agent bank wishes to identify a location other than its headquarters for examination of the credit files by Agencies, or by the Agencies when the agent bank is a non-regulated bank and the Agencies wish to examine the transaction. In the latter case, the Agencies will designate one of the regulated participant banks as the "review" bank.
RegID of the Borrower and the Agent Bank	The "RegIDs" of the Borrower and the Agent bank are currently referred to as the borrower's and the agent bank's "RSSD#." This document proposed to expand the use of "RegIDs" to facilitate linkage of agent bank and participant bank information, and the RSSD system may, or may not, be used in the future for this purpose.
RegID of the Review Bank, if any	The "RegID" of the Review Bank is currently referred to as the review bank's "RSSD#." The RSSD system may, or may not, be used in the future for this purpose.
Industry Code	2002 North American Industrial Classification System (NAICS) code number reflecting the borrower's business activity. Note that although this data element is currently provided, this document proposed to increase the number of digits required to five or six (from four required by the FRB and five requested by the OCC/FDIC/OTS), which is consistent with the industry code requirements for filers of Form FR Y–10.
Bank's internal Facility ID	Bank's internal facility number. Helps examiners identify facilities in bank records.
Facility Origination Date	Date the facility originated. Permits analysis of facilities by "vintage" to identify underwriting trends.
Most Recent Renewal Date	Currently provided by FRB banks only. Date the facility was last renewed or reviewed to confirm the risk rating.
Facility Maturity Date	Date by which all utilizations must be repaid (*i.e.*, not the latest drawdown date, but the date by which all drawings must be repaid).
Facility Committed Exposure	Total facility availability legally committed to the borrower as of the date of the data submission. Includes the total facility amount, not just the portion retained by the agent bank (if any).
Facility Utilized Exposure	Total utilized amount, including off-balance sheet instruments (*e.g.*, LCs), as of the date of the data submission. Includes the total facility utilization, not just the portion retained by the agent bank (if any).
# Days Principal or Interest Past Due (N)	Distress indicator/nonaccrual trigger.
Participant bank Names and Addresses	The agent bank submits the full, legal name of each participant bank, and its State, Zip, and Country.
Participant Bank's Share of Committed Exposure.	The agent bank submits the committed exposure for each participant bank.
Facility Type	Generic description of the facility (*e.g.*, revolver, term).
Facility Purpose	Generic description of purpose (*e.g.*, purchase equipment, provide operating funds).
Facility Risk Rating	Facility rating using the reporting bank's risk rating system.
% Pass	% of committed exposure rated Pass (*i.e.*, translation of the bank's risk rating into the regulatory risk rating system).
% Special Mention	% of committed exposure rated Special Mention (*i.e.*, translation of the bank's risk rating into the regulatory risk rating system).
% Substandard	% of committed exposure rated Substandard (*i.e.*, translation of the bank's risk rating into the regulatory risk rating system).
% Doubtful	% of committed exposure rated Doubtful (*i.e.*, translation of the bank's risk rating into the regulatory risk rating system).
% Loss	% of committed exposure rated Loss (*i.e.*, translation of the bank's risk rating into the regulatory risk rating system).
Nonaccrual Indicator	Yes / No
Nonaccrual Date	First day for which interest was no longer accrued as income.
Internal Watch Indicator	Currently provided only by FRB reporting banks. On the reporting bank's watch list—Yes / No.
Name of Responsible Account Officer	Account officer name.
Phone Number of Responsible Account Officer	Account officer's external phone number.
Department Handling Account	Currently provided only by OCC reporting banks. Name of the business unit that is responsible for monitoring the borrower's performance and credit quality.

Dated: December 14, 2004.

Julie L. Williams,

Acting Comptroller of the Currency.

By order of the Board of Governors of the Federal Reserve System, December 14, 2004.

Jennifer J. Johnson,

Secretary of the Board.

Dated at Washington, DC, the 7th day of December, 2004.

By order of the Federal Deposit Insurance Corporation.

Robert E. Feldman,

Executive Secretary.

Dated: December 9, 2004.

By the Office of Thrift Supervision.

James E. Gilleran,

Director.

[FR Doc. 04–27752 Filed 12–17–04; 8:45 am]

BILLING CODE 4810–33– 6210–01– 6714–01– 6720–01–P

Corrections

Federal Register

Vol. 69, No. 243

Monday, December 20, 2004

This section of the FEDERAL REGISTER contains editorial corrections of previously published Presidential, Rule, Proposed Rule, and Notice documents. These corrections are prepared by the Office of the Federal Register. Agency prepared corrections are issued as signed documents and appear in the appropriate document categories elsewhere in the issue.

DEPARTMENT OF TRANSPORTATION

Federal Aviation Administration

14 CFR Part 71

[Docket No. FAA-2004-17136; Airspace Docket No. 04-AGL-08]

Modification of Class D Airspace; Camp Douglas, WI; Correction

Correction

In rule document 04–27090 appearing on page 71701 in the issue of Friday, December 10, 2004, make the following correction:

§71.1 [Corrected]

In the second column, in §71.1, after amendatory paragraph 1, in the next paragraph, in the fourth line, ''Volk Field 100°'' should read ''Volk Field 110°''.

[FR Doc. C4–27090 Filed 12–17–04; 8:45 am]

BILLING CODE 1505–01–D

Federal Register

Monday
December 20, 2004

Part II

Department of Transportation

Research and Special Programs Administration

49 CFR Parts 171, 172, et al.

Harmonization With the United Nations Recommendations, International Maritime Dangerous Goods Code, and International Civil Aviation Organization's Technical Instructions; Final Rule

DEPARTMENT OF TRANSPORTATION

Research and Special Programs Administration

49 CFR Parts 171, 172, 173, 175, 176, 178 and 180

[Docket No. RSPA–04–17036 (HM–215G)]

RIN 2137–AD92

Harmonization With the United Nations Recommendations, International Maritime Dangerous Goods Code, and International Civil Aviation Organization's Technical Instructions

AGENCY: Research and Special Programs Administration (RSPA), DOT.

ACTION: Final rule.

SUMMARY: RSPA is amending the Hazardous Materials Regulations (HMR) to maintain alignment with international standards by incorporating various amendments, including changes to proper shipping names, hazard classes, packing groups, special provisions, packaging authorizations, air transport quantity limitations and vessel stowage requirements. Because of recent changes to the International Maritime Dangerous Goods Code (IMDG Code), the International Civil Aviation Organization's Technical Instructions for the Safe Transport of Dangerous Goods by Air (ICAO Technical Instructions), and the United Nations Recommendations on the Transport of Dangerous Goods (UN Recommendations), these revisions are necessary to facilitate the transport of hazardous materials in international commerce.

DATES: The effective date of these amendments is January 1, 2005

Delayed Compliance Date: Unless otherwise specified, compliance with the amendments adopted in this final rule is required beginning January 1, 2006.

Incorporation by Reference Date: The incorporation by reference of the publications adopted in § 171.7 of this final rule have been approved by the Director of the Federal Register as of January 1, 2005.

FOR FURTHER INFORMATION CONTACT: Charles Betts, Office of Hazardous Materials Standards, telephone (202) 366–8553, or Shane Kelley, International Standards, telephone (202) 366–0656, Research and Special Programs Administration, U.S. Department of Transportation, 400 Seventh Street, SW., Washington, DC 20590–0001.

SUPPLEMENTARY INFORMATION:

Contents

I. Background
II. Overview of Changes in this Final Rule
III. Overview of Amendments Not Being Considered for Adoption in this Final Rule
IV. Section-By-Section Review
V. Regulatory Analyses and Notices
A. Statutory/Legal Authority for this Rulemaking
B. Executive Order 12866 and DOT Regulatory Policies and Procedures
C. Executive Order 13132
D. Executive Order 13175
E. Regulatory Flexibility Act, Executive Order 13272, and DOT Regulatory Policies and Procedures
F. Paperwork Reduction Act
G. Regulatory Identifier Number (RIN)
H. Unfunded Mandates Reform Act
I. Environmental Assessment
J. Privacy Act

I. Background

On December 21, 1990, RSPA (we) published a final rule (Docket HM–181; 55 FR 52402) based on the UN Recommendations, which comprehensively revised the Hazardous Materials Regulations (HMR), 49 CFR Parts 171 to 180, for harmonization with international standards. Since publication of the 1990 final rule we have issued five additional international harmonization final rules (Dockets HM–215A, 59 FR 67390; HM–215B, 62 FR 24690; HM–215C, 64 FR 10742; HM–215D, 66 FR 33316; and HM–215E, 68 FR 44992). The rules provided additional harmonization with international transportation requirements by more fully aligning the HMR with the corresponding biennial updates of the UN Recommendations, the IMDG Code and the ICAO Technical Instructions.

The UN Recommendations are not regulations, but rather are recommendations issued by the UN Committee of Experts on the Transport of Dangerous Goods (TDG) and on the Globally Harmonized System of Classification and Labeling (GHS). These recommendations are amended and updated biennially by the UN Committee of Experts. They serve as the basis for National, regional, and international modal regulations; specifically, the IMDG Code issued by the International Maritime Organization (IMO), and the ICAO Technical Instructions issued by the ICAO. In 49 CFR 171.12, the HMR authorize domestic transportation of hazardous materials shipments prepared in accordance with the IMDG Code if all or part of the transportation is by vessel, subject to certain conditions and limitations. In § 171.11, subject to certain conditions and limitations, the HMR authorize the offering, acceptance and transport of hazardous materials by aircraft, and by motor vehicle either before or after being transported by aircraft, provided the shipment is in accordance with the ICAO Technical Instructions.

The continually increasing amount of hazardous materials transported in international commerce warrants the harmonization of domestic and international requirements to the greatest extent possible. Harmonization serves to facilitate international transportation and at the same time ensures the safety of people, property and the environment. While the intent of the harmonization rulemakings is to align the HMR with international standards, we review and consider each amendment on its own merit. Each amendment is considered on the basis of the overall impact on transportation safety and the economic implications associated with its adoption into the HMR. Our goal is to harmonize without diminishing the level of safety currently provided by the HMR and without imposing undue burdens on the regulated public. In our efforts to continue to align the HMR with international requirements, this final rule incorporates changes into the HMR based on the Thirteenth Revised Edition of the UN Recommendations, Amendment 32 to the IMDG Code, and the 2005–2006 ICAO Technical Instructions, which become effective January 1, 2005. Petitions for rulemaking concerning harmonization with international standards and additional measures concerning facilitation of international transportation are also addressed in this final rule and serve as the basis of certain amendments. Other amendments are based on feedback from the regulated industry, other DOT modal administrations and our initiative. Also included are various editorial clarifications. Unless otherwise stated, the revisions are for harmonization with international standards.

II. Overview of Changes in This Final Rule

Amendments to the HMR in this final rule include, but are not limited to the following:

—Amendments to the Hazardous Materials Table (HMT) which add, revise or remove certain proper shipping names, hazard classes, packing groups, special provisions, packaging authorizations, bulk packaging requirements, passenger and cargo aircraft maximum quantity limitations and vessel stowage provisions.

—Amendments to the List of Marine Pollutants.
—Revisions and additions of special provisions.
—Removal of the air eligibility marking requirement.
—Addition of a ''KEEP AWAY FROM HEAT'' marking requirement for packages offered for transportation by air.
—Amendment to require that aerosols that are carried aboard an aircraft in accordance with § 175.10(a)(4) have their release devices protected by a cap or other suitable means.
—A grandfather provision to allow the shipment of materials classified as corrosive to steel or aluminum under ASTM G 31–72.
— A provision to require that the word ''overpack'' be marked on overpacks to indicate that inside packages comply with prescribed specifications.
—An amendment to the criteria for classification of materials that are corrosive to metals.
—Revision of the limited quantity provisions for Class 6.1, PG II materials and for materials with a subsidiary hazard of 6.1, PG II.
—Amendments to the packaging requirements for materials classified as Division 6.1, Packing Group I, Hazard Zone A or Hazard Zone B.
—Revision of the organic peroxide packaging requirements in order to have one consolidated packaging section for organic peroxides. The revised section will include three separate tables for organic peroxides authorized for transport in non-bulk packagings, IBCs, and bulk packagings other than IBCs, respectively. Additionally, the packaging tables will be updated through the amendments to the organic peroxide requirements that will add, revise, or delete certain entries in the organic peroxide tables.

III. Overview of Amendments Not Being Considered for Adoption in This Final Rule

This final rule makes changes to the HMR based on amendments to the Thirteenth Revised Edition of the UN Recommendations, Amendment 32 to the IMDG Code, and the 2005–2006 ICAO Technical Instructions, which become effective January 1, 2005. However, we are not adopting all of the amendments to those documents into the HMR. In many cases, amendments to the international regulation have not been adopted because of the framework or structure of the HMR. In several cases, we are handling certain amendments in separate rulemakings. For example, all amendments related to infectious substances are being handled under Docket HM–226A. In some instances, such as the amendment to ICAO Technical Instructions to allow certain oxygen generators aboard passenger carrying aircraft, we do not believe the amendment to be in the interest of public safety.

One of the goals of this rulemaking is to continue to maintain consistency between the HMR and the international requirements. We are not striving to make the HMR identical to the international regulations but rather striving to remove or avoid potential barriers to international transportation.

Below is a listing of those significant amendments to the international regulations that we have not included in this final rule with a brief explanation of why the amendment was not included:

• Requirements for infectious substances and genetically modified micro-organisms;

[Amendments to the HMR related to infectious substances will be addressed in a future rulemaking under Docket HM–226A. Several other federal agencies regulate genetically modified micro-organisms; thus we do not plan to adopt provisions for their transport in the HMR.]

• Compressed gas cylinders;

[Amendments to the HMR related to compressed gas cylinders will be addressed in a future rulemaking under Docket HM–220E.]

• Environmentally hazardous substances;

[Delay in action pending further amendments to the international regulations.]

• Hazardous materials security;

[Amendments to the HMR related to the UN Model Regulation's hazardous materials security requirements were promulgated in a rulemaking under the HM–232 Docket series.]

• Requirements for radioactive materials;

[Amendments to the HMR related to Class 7 (radioactive) materials are being addressed in a rulemaking under the HM–230 Docket series.]

• Non-specification bulk packagings;

[We are not adopting the new requirements in the UN Recommendations for non-specification bulk packagings including the additional inspection, testing and marking requirements. We are unsure about the cost impacts of imposing these additional amendments and, therefore, are not adopting any additional amendments at this time.]

• The reference to EN 10028–3, Part 3 for defining steel grain size relevant to the definition of fine grain steel;

[We do not believe there is a need to adopt the European standard EN 10028–3, Part 3 because this standard is equivalent to ASTM E 112–96 (IBR, see § 171.7 of this subchapter). In addition, the ASTM standard is currently referenced in the HMR and is more commonly used and recognized in the U.S.]

• Bulk authorization for UN0331, UN0332 and UN3375;

[For several years, we have authorized, under exemption, the transport of certain blasting agents in bulk packagings. We are currently reviewing those exemptions to determine if they should be included in the HMR. The amendments in the UN Recommendations related to the bulk authorizations for UN0331, UN0332 and UN3375 will be included in that review.]

• The removal of wooden barrel requirements;

[The removal of the wooden barrel requirements (2C1 and 2C2) may be considered in a future rulemaking.]

• The 24-hour gasket relaxation requirement;

[A requirement that removable head packagings for liquids not be drop tested until at least 24 hours after filling and closing to allow for any possible gasket relaxation was adopted in the thirteenth revised edition of the UN Model Regulations. We have conducted testing in coordination with drum manufacturers and have determined that this requirement is not substantiated by the results of the tests conducted. Therefore, we are not adopting into the HMR amendments relative to the 24-hour gasket relaxation requirement. We also opposed this requirement when it was considered by the UN TDG Sub-Committee.]

• Authorization to transport protective breathing equipment (PBE's) with an oxygen generator as cargo onboard a passenger-carrying aircraft.

[We do not believe that oxygen generators should be transported aboard passenger carrying aircraft. Therefore, we are not adopting the ICAO amendment that would allow oxygen generators in protective breathing equipment to be transported in passenger carrying aircraft.]

IV. Section-By-Section Review

Part 171

Section 171.7

Paragraph (a)(3) (incorporation by reference materials) is updated to include the most recent editions of the

ICAO Technical Instructions, the IMDG Code and the UN Recommendations. The updated editions of these standards become effective January 1, 2005. Additionally, the International Maritime Organization (IMO) recommends authorizing a one-year transition period, with a delayed compliance date of January 1, 2006, for the use of the updated edition (Amendment 32) of the IMDG Code.

The updated additions are as follows:

—The ICAO Technical Instructions, 2005–2006 Edition.
—The IMDG Code, Amendment 32.
—The UN Recommendations, Thirteenth Edition.
—The UN Manual of Tests and Criteria, 4th Revised Edition.

Paragraph (b) (list of informational materials not requiring incorporation by reference) is revised by adding an additional reference for a new method for determining the size of an emergency-relief device for portable tanks transporting organic peroxides. This revision is based on a petition for rulemaking numbered P–1428. The petition was submitted by the Organic Peroxides Producers Safety Division of the Society of the Plastics Industry, Inc.

One commenter recommended that we revise the ''Note to Paragraph (h)(3)(vi)'' in § 173.225 to maintain format consistency with the incorporation by reference entry for ''Example of a Test Method for Venting Sizing: OPPSD/SPI Methodology'' found in § 171.7(a). We disagree. The reference to a second example of a test method for venting sizing is not found in § 171.7(a) as a material incorporated by reference. Rather, it is found in § 171.7(b) as informational material not requiring incorporation by reference. Therefore, for clarification we are revising § 171.7(b) to include the reference to the *''American Institute of Chemical Engineers Process Safety Progress Journal.''* In addition, we are revising the ''Note to Paragraph (h)(3)(vi)'' in § 173.225 to include a reference to § 171.7(b), *list of informational materials not requiring incorporation by reference.*

Section 171.8

The definition for ''salvage packaging'' is revised to include the term ''non-conforming.'' The term ''non-conforming'' was added to the definition by the UN Committee of Experts in December 2000 to accommodate the use of salvage packaging for. Occasionally an undamaged package is found to be tested to a performance level which is less than that required for the specific substance it contains (*e.g.*, a drum tested to PG II standards containing a PG I substance). In other instances, the package is found to be a non-performance tested packaging containing a regulated substance. In these situations, it may not be safe or practical to transfer the material to the correct packaging to continue on to the consignee in order to ensure compliance with the HMR. Therefore, the use of salvage packaging to contain ''non-conforming'' packages will minimize the risk to those handling the package during its transport back to the shipper or to an appropriate disposal location.

Section 171.11

Paragraph (d)(15) is revised to clarify that the limitations therein also apply to oxygen generators contained in personal breathing equipment. In addition, paragraph (d)(17) is revised to indicate that an organic peroxide that is not identified by a technical name in any of the organic peroxide tables found in § 173.225 must be approved by the Associate Administrator in accordance with the requirements of § 173.128(d).

Section 171.12

In § 171.12, paragraph (b)(20) is revised to indicate that an organic peroxide that is not identified by a technical name in any of the organic peroxide tables found in § 173.225 must be approved by the Associate Administrator in accordance with the requirements of § 173.128(d).

Section 171.12a

Paragraph (a) is revised to clarify the requirements for the return to Canada of bulk packagings that correspond to DOT or UN Specifications. Paragraph (b)(9)(ii) is revised to indicate that the shipping certification must be completed for shipments from Canada that enter the U.S. Paragraph (b)(18) is revised to indicate that an organic peroxide that is not identified by a technical name in any of the organic peroxide tables found in § 173.22 must be approved by the Associate Administrator in accordance with the requirements of § 173.128(d).

Section 171.14

Paragraphs (d) and (d)(1) are revised to authorize a delayed implementation date for the amendments in this final rule. The effective date of this final rule is January 1, 2005. We are also, authorizing a delayed compliance date of January 1, 2006, which is comparable to the transitional provisions provided in the final rule published under Docket HM–215E. The delayed mandatory compliance date offers sufficient time to implement the new requirements.

Paragraph (d)(2) is revised to authorize certain intermixing of old and new requirements.

Part 172

Section 172.101

The regulatory text preceding the Hazardous Materials Table is revised as follows:

Paragraph (c)(11) and the corresponding note to paragraph (c)(11) are amended to revise a section reference. The reference to § 173.225(c) in the first sentence is revised to read § 173.225(b) and the reference to § 173.225(c)(2) in the note to paragraph (c)(11) is revised to read § 173.225(b)(2).

Paragraph (d)(4) is revised by adding a statement indicating that when the abbreviation ''Comb liq.'' is found in the ''Hazard class or division'' column of the Hazardous Materials Table (column 3), the material falls into the ''Combustible liquid'' hazard class.

Paragraph (i)(3) of this section is revised to specify that Column 7 of the Hazardous Materials Table contains additional bulk packaging authorizations and limitations for the use of UN portable tanks.

§ 172.101 The Hazardous Materials Table (HMT). In this final rule we made various amendments to the HMT. Readers should review all changes for a complete understanding of the Table amendments. The HMT has been reprinted in its entirety due to the numerous changes. Under this final rule the changes to the HMT for the purpose of harmonizing with international standards, unless otherwise stated, include, but are not limited to the following:

• We revised several entries by adding the qualifying word ''liquid.'' This action is consistent with the revisions to proper shipping names that were incorporated into the Thirteenth Revised Edition of the UN Recommendations. Affected entries are as follows:

UN1392 Alkaline earth metal amalgam
UN1420 Potassium metal alloys
UN1422 Potassium sodium alloys
UN1701 Xylyl bromide
UN1742 Boron trifluoride acetic acid complex
UN1743 Boron trifluoride propionic acid complex
UN2235 Chlorobenzyl chlorides
UN2236 3-Chloro-4-methylphenyl isocyanate
UN2306 Nitrobenzotrifluorides
UN2445 Lithium alkyls
UN2552 Hexafluoroacetone hydrate
UN2937 alpha-Methylbenzyl alcohol

UN3276 Nitriles, toxic, n.o.s.
UN3278 Organophosphorus compound, toxic, n.o.s.
UN3280 Organoarsenic compound, n.o.s.
UN3282 Organometallic compound, toxic, n.o.s.
UN3281 Metal carbonyls, n.o.s.

• We revised several entries by adding the qualifying word ''solid.'' This action is consistent with the revisions to proper shipping names that were incorporated into the Thirteenth Revised Edition of the UN Recommendations. Affected entries are as follows:

UN1445 Barium chlorate
UN1447 Barium perchlorate
UN1459 Chlorate and magnesium chloride mixture
UN1470 Lead perchlorate
UN1578 Chloronitrobenzenes
UN1579 4-Chloro-o-toluidine hydrochloride
UN1650 beta-Naphthylamine
UN1680 Potassium cyanide
UN1689 Sodium cyanide
UN1690 Sodium fluoride
UN1697 Chloroacetophenone
UN1709 2,4-Toluylenediamine
UN1812 Potassium fluoride
UN1843 Ammonium dinitro-o-cresolate
UN2074 Acrylamide
UN2239 Chlorotoluidines
UN2261 Xylenols
UN2446 Nitrocresols
UN2662 Hydroquinone
UN3283 Selenium compound, n.o.s.

• We revised several entries by removing the qualifying word ''solid.'' This action provides consistency with the Thirteenth Revised Edition of the UN Recommendations. The affected entries are as follows:

UN1489 Potassium perchlorate, solid
UN1598 Dinitro-o-cresol, *solid*
UN1638 Mercury iodide, *solid*
UN1740 Hydrogendifluorides, n.o.s. *solid*
UN2439 Sodium hydrogendifluoride, *solid*

• We deleted several entries. This action removes from the HMR the solution form of entries that are not identified as solutions in the Thirteenth Revised Edition of the UN Recommendations. The deleted entries are as follows:

UN1489 Potassium perchlorate, solution
UN1598 Dinitro-o-cresol, *solution*
UN1638 Mercury iodide, *solution*
UN1740 Hydrogendifluorides, n.o.s. *solutions*
UN2439 Sodium hydrogendifluoride *solution*

• We revised the proper shipping name ''Butadienes, stabilized,'' UN1010 to read ''Butadienes, stabilized *or* Butadienes and hydrocarbon mixture, stabilized, *containing more than 40% butadienes.*''

• We revised the proper shipping name ''Potassium hydrogendifluoride, *solid*,'' UN1811 to read ''Potassium hydrogendifluoride, solid.''

• We revised the proper shipping name ''Refrigerating machines, *containing non-flammable, non-toxic, liquefied gas or ammonia solution (UN2672)*,'' UN2857 to read ''Refrigerating machines *containing non-flammable, non-toxic gases or ammonia solutions (UN2672).*''

• We removed four references to IB52 and four references to T23 from column 7 of the HMT. This change is necessary because IB52 and T23 have been relocated to § 173.225. The affected entries are:

UN3109 Organic peroxide type F, liquid
UN3110 Organic peroxide type F, solid
UN3119 Organic peroxide type F, liquid, temperature controlled
UN3120 Organic peroxide type F, solid, temperature controlled

• IP5 is removed from column 7 of the HMT for the following UN entries:

UN1791 Hypochlorite solution
UN2014 Hydrogen peroxide, aqueous solution with not less than 20% but not more than 60% hydrogen peroxide (*stabilized as necessary*).
UN3149 Hydrogen peroxide and peroxyacetic acid mixture with acid(s), water and not more than 5% peroxyacetic acid.

• We deleted several entries. This action is consistent with the deletion of proper shipping names that were incorporated into the Thirteenth Revised Edition of the UN Recommendations that we are proposing to adopt into the HMR. The entries affected are:

UN2003 Metal alkyls, water-reactive, n.o.s. *or* Metal aryls, water-reactive, n.o.s.
UN3049 Metal alkyl halides, water-reactive, n.o.s. *or* Metal aryl halides, water-reactive, n.o.s.
UN3050 Metal alkyl hydrides, water-reactive, n.o.s. *or* Metal aryl hydrides, water-reactive, n.o.s.
UN3207 Organometallic compound *or* Compound solution *or* Compound dispersion, water-reactive, flammable, n.o.s.
UN3203 Pyrophoric organometallic compound, water-reactive, n.o.s., liquid Pyrophoric organometallic compound, water-reactive, n.o.s., solid
UN3372 Organometallic compound, solid, water-reactive, flammable, n.o.s.

• We added the following new entries. Many of these entries are the liquid or solid form of entries that are already listed in the HMT. This action is consistent with the addition of proper shipping names that were incorporated into the Thirteenth Revised Edition of the UN Recommendations. The new entries are as follows:

UN3377 Sodium perborate monohydrate
UN3378 Sodium carbonate peroxyhydrate
UN3379 Desensitized explosives, liquid, n.o.s.
UN3380 Desensitized explosives, solid, n.o.s.
UN3401 Alkali metal amalgam, solid
UN3402 Alkaline earth metal amalgam, solid
UN3403 Potassium metal alloys, solid
UN3404 Potassium sodium alloys, solid
UN3405 Barium chlorate solution
UN3406 Barium perchlorate solution
UN3407 Chlorate and magnesium chloride mixture solution
UN3408 Lead perchlorate solution
UN3409 Chloronitrobenzenes, liquid
UN3410 4-Chloro-o-toluidine hydrochloride solution
UN3411 beta-Naphthylamine solution
UN3413 Potassium cyanide solution
UN3414 Sodium cyanide solution
UN3415 Sodium fluoride solution
UN3416 Chloroacetophenone, liquid
UN3417 Xylyl bromide, solid
UN3418 2,4-Toluylenediamine solution
UN3419 Boron trifluoride acetic acid complex, solid
UN3420 Boron trifluoride propionic, acid complex, solid
UN3421 Potassium hydrogendifluoride solution
UN3422 Potassium fluoride solution
UN3423 Tetramethylammonium hydroxide, solid
UN3424 Ammonium dinitro-o-cresolate solution
UN3425 Bromoacetic acid, solid
UN3426 Acrylamide solution
UN3427 Chlorobenzyl chlorides, solid
UN3428 3-Chloro-4-Methylphenyl isocyanate, solid
UN3429 Chloro-toluidines, liquid
UN3430 Xylenols, liquids
UN3431 Nitrobenzotrifluorides, solid
UN3432 Polychlorinated biphenyls, solid
UN3433 Lithium alkyls, solid
UN3434 Nitrocresols, liquid
UN3435 Hydroquinone solution
UN3436 Hexafluoroacetone hydrate, solid

UN3437 Chlorocresols, solid
UN3438 alpha-Methylbenzyl alcohol, solid
UN3439 Nitriles, toxic, solid, n.o.s.
UN3440 Selenium compound, liquid, n.o.s.
UN3441 Chlorodinitrobenzenes, solid
UN3442 Dichloroanilines, solid
UN3443 Dinitrobenzenes, solid
UN3444 Nicotine hydrochloride, solid
UN3445 Nicotine sulphate, solid
UN3446 Nitrotoluenes, solid
UN3447 Nitroxylenes, solid
UN3448 Tear gas substance, solid, n.o.s.
UN3449 Bromobenzyl cyanides, solid
UN3450 Diphenylchloroarsine, solid
UN3451 Toluidines, solid
UN3452 Xylidines, solid
UN3453 Phosphoric acid, solid
UN3454 Dinitrotoluenes, solid
UN3455 Cresols, solid
UN3456 Nitrosyl-sulphuric acid, solid
UN3457 Chloronitrotoluenes, solid
UN3458 Nitroanisoles, solid
UN3459 Nitrobromobenzenes, solid
UN3460 N-Ethylbenzyltoluidines, solid
UN3461 Aluminium alkyl halides, solid
UN3462 Toxins, extracted from living sources, solid, n.o.s.
UN3464 Organophosphorus compound, toxic, solid, n.o.s.
UN3465 Organoarsenic compound, solid, n.o.s.
UN3466 Metal carbonyls, solid, n.o.s.
UN3467 Organometallic compound, toxic, solid, n.o.s.
UN3468 Hydrogen in a metal hydride storage system

A commenter stated that by adding the shipping names for desensitized explosives under identification numbers UN3379 and UN3380, approvals should be modified to authorize the use of classifications for the applicable hazardous materials. The commenter also noted that due to these additions, the definitions for flammable solids and flammable liquids require revision to account for the new shipping names. We do not anticipate a significant number of explosives being assigned to these shipping names. Therefore, we disagree with the commenter's contention that each holder of an EX number request an updated shipping classification. In addition, we do not agree with the commenter's request to revise the definitions of flammable solid and flammable liquid to include the additional proper shipping names. The definitions of flammable solid and flammable liquid adequately describe materials assigned to those shipping names. Additionally, shipping names are not found under hazard class definitions, but rather, in the HMT.

• We added the following new generic entries for materials that are toxic by inhalation. These new names will replace the existing generic entries in the HMT. This action is consistent with the addition of proper shipping names that were incorporated into the Thirteenth Revised Edition of the UN Recommendations. Affected entries are as follows:

UN3381 Toxic by inhalation liquid, n.o.s. *with an inhalation toxicity lower than or equal to 200 ml/m³ and saturated vapor concentration greater than or equal to 500 LC_{50}.*
UN3382 Toxic by inhalation liquid, n.o.s. *with an inhalation toxicity lower than or equal to 1000 ml/m³ and saturated vapor concentration greater than or equal to 10 LC_{50}.*
UN3383 Toxic by inhalation liquid, flammable, n.o.s. *with an inhalation toxicity lower than or equal to 200 ml/m³ and saturated vapor concentration greater than or equal to 500 LC_{50}.*
UN3384 Toxic by inhalation liquid, flammable, n.o.s. *with an inhalation toxicity lower than or equal to 1000 ml/m³ and saturated vapor concentration greater than or equal to 10 LC_{50}.*
UN3385 Toxic by inhalation liquid, water-reactive, n.o.s. *with an inhalation toxicity lower than or equal to 200 ml/m³ and saturated vapor concentration greater than or equal to 500 LC_{50}.*
UN3386 Toxic by inhalation liquid, water-reactive, n.o.s. *with an inhalation toxicity lower than or equal to 1000 ml/m³ and saturated vapor concentration greater than or equal to 10 LC_{50}.*
UN3387 Toxic by inhalation liquid, oxidizing, n.o.s. *with an inhalation toxicity lower than or equal to 200 ml/m³ and saturated vapor concentration greater than or equal to 500 LC_{50}.*
UN3388 Toxic by inhalation liquid, oxidizing, n.o.s. *with an inhalation toxicity lower than or equal to 1000 ml/m³ and saturated vapor concentration greater than or equal to 10 LC_{50}.*
UN3389 Toxic by inhalation liquid, corrosive, n.o.s. *with an inhalation toxicity lower than or equal to 200 ml/m³ and saturated vapor concentration greater than or equal to 500 LC_{50}.*
UN3390 Toxic by inhalation liquid, corrosive, n.o.s. *with an inhalation toxicity lower than or equal to 1000 ml/m³ and saturated vapor concentration greater than or equal to 10 LC_{50}.*

• We added the following new generic entries for organometallic substances. This action is consistent with the addition of proper shipping names that were incorporated into the Thirteenth Revised Edition of the UN Recommendations. The new entries are as follows:

UN3391 Organometallic substance, solid, pyrophoric
UN3392 Organometallic substance, liquid, pyrophoric
UN3393 Organometallic substance, solid, pyrophoric, water-reactive
UN3394 Organometallic substance, liquid, pyrophoric, water-reactive
UN3395 Organometallic substance, solid, water-reactive
UN3396 Organometallic substance, solid, water-reactive, flammable
UN3397 Organometallic substance, solid, water-reactive, self-heating
UN3398 Organometallic substance, liquid, water-reactive
UN3399 Organometallic substance, liquid, water-reactive, flammable
UN3400 Organometallic substance, solid, self-heating

In addition, we are continuing to allow the use of the following specific Organometallic entries: UN1366, UN1370, UN2005, UN2445, UN3051, UN3052, UN3053, and UN3076. However, we anticipate removing these entries from the HMT by January 1, 2007.

• The U.N. Recommendations have adopted a rationalized approach for the assignment of UN portable tank instructions for solid materials. Based on that rationalized approach, we made several changes to UN portable tank authorizations in the HMR. These changes are summarized as follows. For a more specific identification of the affected shipping descriptions, refer to the *UN report* located in the public Docket.

For Division 4.1, Packing Group I materials, the use of UN portable tanks is not authorized.

For Division 4.3 materials with a subsidiary class of 6.1, in Packing Group I, the use of portable tanks is not authorized.

For materials of Divisions 4.1, 4.2, 4.3, 5.1, 6.1, and Classes 8 and 9, in Packing Group II, Special Provisions T3 is specified.

For Division 4.2, Packing Group I materials, T21 and TP7 is specified.

For Division 4.3, Packing Group I materials, T9 and TP7 is specified.

For Division 5.1, Packing Group I materials, the use of UN portable tanks is not authorized.

For Division 6.1 and Class 8, Packing Group I materials, T6 is specified.

For materials of Divisions 4.1, 4.2, 4.3, 5.1, 6.1, and Classes 8 and 9, in Packing Group III, Special Provisions T1 is specified.

• Several entries in the HMT have been revised by amending column 9B to read ''forbidden'' so that the materials are no longer authorized for transport aboard cargo aircraft. The entries have been revised because they meet the criteria of either Zone C or Zone D inhalation toxicity. All other Zone C and Zone D toxic by inhalation materials listed in the HMR are currently already forbidden from transport aboard passenger and cargo aircraft (these materials are already forbidden from transport aboard passenger aircraft). The entries to be revised include:

Zone C

UN2204 Carbonyl sulfide
UN1023 Coal gas, compressed
UN1064 Methyl mercaptan
UN1048 Hydrogen bromide, anhydrous
UN1079 Sulfur dioxide

Zone D

UN1005 Ammonia, anhydrous
UN3318 Ammonia solution, *relative density less than 0.880 at 15 degrees C in water, with more than 50 percent ammonia*
UN1040 Ethylene oxide *or* Ethylene oxide with nitrogen *up to a total pressure of 1MPa (10 bar) at 50 degrees C*
UN1040 Ethylene oxide *or* Ethylene oxide with nitrogen *up to a total pressure of 1MPa (10 bar) at 50 degrees C*
UN2191 Sulfuryl fluoride

Also, see § 172.102 for additional HMT amendments.

Appendix B to § 172.101

In Appendix B to § 172.101, List of Marine Pollutants, we removed the entries ''Diphenyl oxide and biphenyl phenyl ether mixtures,'' ''Isoamyl mercaptan,'' ''Pentanethiols,'' and ''Tetrachlorophenol.'' We revised the entry ''2, 6-Di-tert-Butylphenol'' and we added the entry ''Chloropicrin.''

Section 172.102

We amended § 172.102, Special Provisions, as follows:

• Several entries in the HMT are revised by adding special provisions A3, A6, A7, A9, A10, N3, and N36 to align this section with the equivalent special provisions in the ICAO Technical Instructions (13, 2, 5, 4, 7, 21, and 3 respectively). We removed the ''A'' special provisions for several entries because we have determined that the materials to which the provisions apply are currently not authorized for transportation on either passenger or cargo aircraft.

The following entries are revised by adding special provision A3:

UN1154 Diethylamine
UN1788 Hydrobromic acid, *not more than 49% strength*
UN1789 Hydrochloric acid
UN2031 Nitric acid, *other than red fuming, with more than 70% nitric acid*
UN2604 Boron trifluoride diethyl etherate

• The following entries are revised by adding A6:

UN1111 Amyl mercaptan
UN1228 Mercaptans, liquid, flammable, toxic, n.o.s.
UN1760 Corrosive liquid, n.o.s.
UN1903 Disinfectants, liquid, corrosive, n.o.s.
UN2031 Nitric acid, *other than red fuming, with not more than 70% nitric acid*
UN2054 Morpholine
UN2347 Butyl mercaptan
UN2363 Ethyl mercaptan
UN2402 Propanethiols
UN2801 Dye, liquid, corrosive, n.o.s.
UN2920 Corrosive liquid, flammable, n.o.s.
UN2922 Corrosive liquid, toxic, n.o.s.
UN3071 Mercaptans, liquid, toxic, flammable, n.o.s.
UN3093 Corrosive liquid, oxidizing, n.o.s.
UN3093 Corrosive liquid, oxidizing, n.o.s.
UN3094 Corrosive liquid, water-reactive, n.o.s.
UN3094 Corrosive liquid, water-reactive, n.o.s.
UN3098 Oxidizing liquid, corrosive, n.o.s.
UN3099 Oxidizing liquid, toxic, n.o.s.
UN3139 Oxidizing liquid, n.o.s.
UN3145 Alkylphenols, liquid, n.o.s. (*including C2-C12 homologues*)
UN3264 Corrosive liquid, acidic, inorganic, n.o.s.
UN3265 Corrosive liquid, acidic, organic, n.o.s.
UN3266 Corrosive liquid, basic, inorganic, n.o.s.
UN3267 Corrosive liquid, basic, organic, n.o.s.
UN3301 Corrosive liquid, self-heating, n.o.s.

• The following entries are revised by adding special provision A7:

UN1167 Divinyl ether, stabilized
UN1277 Propylamine
UN1389 Alkali metal amalgam, liquid
UN1389 Alkali metal amalgam, solid
UN1391 Alkali metal dispersion *or* Alkaline earth metal dispersion
UN1407 Cesium or Caesium
UN1420 Potassium metal alloys
UN1421 Alkali metal alloy, liquid, n.o.s.
UN1422 Potassium sodium alloys
UN1431 Sodium methylate
UN1796 Nitrating acid mixture *with not more than 50% nitric acid*
UN1796 Nitrating acid mixture *with more than 50% nitric acid*
UN1826 Nitrating acid mixture, spent *with not more than 50% nitric acid*
UN1826 Nitrating acid mixture, spent *with more than 50% nitric acid*
UN1828 Sulphur chlorides
UN1938 Bromoacetic acid
UN2257 Potassium
UN2749 Tetramethylsilane
UN3093 Corrosive liquid, oxidizing, n.o.s.
UN3093 Corrosive liquid, oxidizing, n.o.s.
UN3094 Corrosive liquid, water-reactive, n.o.s.
UN3094 Corrosive liquid, water-reactive, n.o.s.
UN3205 Alkaline earth metal alcoholates, n.o.s.
UN3205 Alkaline earth metal alcoholates, n.o.s.
UN3206 Alkali metal alcoholates, self-heating, corrosive, n.o.s.
UN3206 Alkali metal alcoholates, self-heating, corrosive, n.o.s.
UN3208 Metallic substance, water-reactive, n.o.s.
UN3208 Metallic substance, water-reactive, n.o.s.
UN3208 Metallic substance, water-reactive, n.o.s.
UN3209 Metallic substance, water-reactive, self-heating, n.o.s.
UN3209 Metallic substance, water-reactive, self-heating, n.o.s.
UN3209 Metallic substance, water-reactive, self-heating, n.o.s.

• The following entries are revised by adding special provision A9:

UN1449 Barium peroxide
UN1452 Calcium chlorate
UN3212 Hypochlorites, inorganic, n.o.s.

• The following entries are revised by adding special provision A10:

UN1828 Sulphur chlorides
UN2401 Piperidine

• The following entry is revised by adding special provision N3:

UN2817 Ammonium hydrogendifluoride solution

• The following entries are revised by adding special provision N36:

UN1184 Ethylene dichloride
UN1732 Antimony pentafluoride
UN1777 Fluorosulphonic acid
UN2699 Trifluoroacetic acid

• The following entries are revised by removing certain ''A'' special provisions since the materials themselves are forbidden for transportation aboard passenger and cargo aircraft:

UN1541 Acetone cyanohydrin, stabilized (remove A3)
UN1722 Allyl chloroformate (remove A3)
UN2692 Boron tribromide (remove A3, A7)
UN1744 Bromine *or* Bromine solutions (remove A3, A6)
UN2484 tert-Butyl isocyanate (remove A7)
UN2485 n-Butyl isocyanate (remove A7)
UN1752 Chloroacetyl chloride (remove A3, A6, A7)
UN1754 Chlorosulfonic acid (*with or without sulfur trioxide*) (remove A3, A6, A10)
UN2382 Dimethylhydrazine, symmetrical (remove A7)
UN1182 Ethyl chloroformate (remove A3, A6, A7)
UN2481 Ethyl isocyanate (remove A7)
UN2014 Hydrogen peroxide, aqueous solutions *with more than 40 percent but not more than 60 percent hydrogen peroxide* (stabilized as necessary) (remove A3, A6)
UN2015 Hydrogen peroxide, stabilized *or* Hydrogen peroxide aqueous solutions, stabilized *with more than 60 percent hydrogen peroxide* (remove A3, A6)
NA9206 Methyl phosphonic dichloride (remove A3)
UN2534 Methylchlorosilane (remove A2, A3, A7)
UN2304 Naphthalene, molten (remove A1)
UN1670 Perchloromethyl mercaptan (remove A3, A7)
UN1810 Phosphorus oxychloride (remove A7)
UN2740 n-Propyl chloroformate (remove A3, A6, A7)
UN1829 Sulfur trioxide, stabilized (remove A7)
UN1831 Sulfuric acid, fuming *with 30 percent or more free sulfur trioxide* (remove A3, A6, A7)
UN1834 Sulfuryl chloride (remove A3)
UN1836 Thionyl chloride (remove A7)
UN2474 Thiophosgene (remove A7)
UN1838 Titanium tetrachloride (remove A3, A6)
UN2441 Titanium trichloride, pyrophoric *or* Titanium trichloride mixtures, pyrophoric (remove A7, A8, A19, A20)
UN2442 Trichloroacetyl chloride (remove A3, A7)
UN1295 Trichlorosilane (remove A7)
UN2438 Trimethylacetyl chloride (remove A3, A6, A7)

• Paragraph (b)(3) of this section is amended to specify that a ''B'' code refers to a special provision that applies only to certain bulk packaging requirements and that, unless otherwise stated, does not apply to UN, IM Specification portable tanks or IBCs.

• Paragraph (b)(4) of this section is amended to specify that a code containing the letters ''IB'' or ''IP'' refers to a special provision that applies only to transportation in IBCs.

• Paragraph (b)(7) of this section is amended to specify that a code containing the letter ''T'' refers to a special provision which applies only to transportation in UN or IM Specification portable tanks.

• Paragraph (b)(8) is redesignated (b)(9) and a new paragraph (b)(8) is added to specify that a code containing the letters ''TP'' refers to a special provision that is in addition to those provided by the portable tank instructions or the requirements in part 178.

• Special Provision 47 is revised to include an additional exception currently in the UN Model Regulations specifying that a leakproofness test is not required when the liquids are fully absorbed in solid material contained in sealed bags.

• Special Provision 135 is revised to expand the applicability of the proper shipping names ''Vehicle, flammable liquid powered'' and ''Vehicle, flammable gas powered'' to include hybrid electric vehicles.

• Special Provision 137 is revised to expand the exception for ''Cotton, dry''.

• Special Provision 143 is removed and relocated to § 173.219 so that the limitations on the types of hazardous materials authorized apply to both self-inflating and non-self-inflating life-saving appliances.

• Special Provision 153 is relocated to new paragraph (k) in § 173.115 and revised to include amended classification criteria for aerosols containing flammable constituents consistent with criteria in the UN Model Regulations. The revised criteria include methods for the classification of aerosols based on the percentage of flammable components. One commenter agreed with the removal of Special Provision 153 and the relocation of classification criteria for aerosols to § 173.115(k).

• New Special Provision 163 is added to specify that Ammonium Nitrate Emulsions are required to satisfactorily pass Test Series 8 of the UN Manual of Tests and Criteria, Part I, Section 18.

• New Special Provision 164 is added to specify that an approval is required for ''Desensitized explosives, liquid, n.o.s.'' and ''Desensitized explosives, solid, n.o.s.''

• New Special Provision 165 is added to the calcium hypochlorite PG II and the PG III entries for UN1748 and UN2880 to specify the danger of exothermic decomposition and require shading from direct sunlight and sources of heat during transportation. One commenter agreed with our efforts to harmonize the HMR with UN Recommendations, but was concerned with the intent of Special Provision 165. This commenter agreed that calcium hypochlorite should be shaded from direct sunlight but questioned the ambient heat and ventilation provisions. The commenter stated that calcium hypochlorite is currently transported in closed cargo transport units, thus, satisfying the requirement to protect this hazardous material from direct sunlight. However, since the cargo transport units are not ventilated by fan or induced ventilation, and the cargo transport units would be subjected to ambient heat, a violation of Special Provision 165 appears imminent. We disagree. We feel Special Provision 165 provides latitude for compliance with the ventilation and ambient heat requirements. Proper ventilation and protection from ambient heat can be achieved during the loading process of the cargo transport units and throughout the transportation cycle by allowing adequate space for air movement around the calcium hypochlorite packages. We do agree; however, that cargo transport units themselves should not be required to be shaded from direct sunlight. Therefore, we have revised the regulatory text accordingly.

• New Special Provision 166 is added to the PG II entry for calcium hypochlorite, UN2880 and UN1748 to indicate that calcium hypochlorite in the non-friable tablet form may be transported as a PG III material.

• New Special Provision 167 is added to the new entry for ''Hydrogen in a metal hydride storage system'' to specify that such storage systems shall always be considered as containing hydrogen.

• New Special Provision 170 is added to Organometallic substances entries (UN3391, UN3392, UN3393, and UN3394). The special provision requires air to be eliminated from the vapor space by nitrogen or other means.

• New Special Provision 171 is added to the UN2880 PG III entry. Since UN2880 also covers mixtures of hydrated calcium hypochlorite in any concentration, some formulations in other than tablet form (*e.g.*, in granular form) may meet the criteria for classification in Division 5.1, Packing Group III when subjected to the relevant test in the UN Manual of Tests and Criteria. The PG III entry for calcium hypochlorite is only authorized when the material is offered in the non-friable tablet form or for granular or powdered

mixtures. This entry is not authorized for the pure form of ''Calcium hypochlorite, hydrated''. We also recognize that some formulations, when tested, do not meet the criteria for classification in Division 5.1. In light of this, we added a new Special Provision 171 to the UN2880, PG III entry in the HMT to allow for the possibility to classify powdered or granular mixtures of hydrated calcium hypochlorite in Packing Group III when data indicate that the mixture meets the criteria for assignment to PG III. One commenter supports the revisions that align calcium hypochlorite entries in the HMT with UN Recommendations. However, this commenter requested the addition of Special Provision 171 to the entry, ''Calcium hypochlorite, dry or Calcium hypochlorite mixtures dry, (UN1748)'' for consistent alignment with the UN Recommendations. We agree. After further review of the UN Recommendations, we have determined that the UN Special Provision 316 is equivalent to the proposed Special Provision 171 in Docket HM–215G, and is applicable to both the ''dry'' and ''hydrated'' calcium hypochlorite entries. Therefore, we are assigning Special Provision 171 to the ''Calcium hypochlorite, dry *or* Calcium hypochlorite mixtures dry, (UN1748)'' entry.

• Special Provision A11 is currently assigned to UN 2983, Ethylene oxide and Propylene oxide mixtures and UN 1411, Lithium aluminum hydride, ethereal. In the ICAO Technical Instructions these substances are only authorized for transport in metal cylinders. A11 states ''For combination packagings, when metal inner packagings are permitted, only specification cylinders constructed of metals which are compatible with the hazardous material may be used. In the NPRM, we proposed to harmonize with the applicable ICAO Technical Instruction particular packing requirement (PPR 8), however discussions with the ICAO Dangerous Goods Panel and further analysis of ICAO PPR 8 has revealed that the requirement may need to be amended. Our analysis showed that other packagings, including glass inner packagings, are authorized, and as such restricting packagings to only specification cylinders appears unnecessarily restrictive. As such we are not proposing to amend Special Provision A11 in this final rule.

• Consistent with ICAO, we are adding a proper shipping name to the HMT for ''Receptacles, small containing gas, 2.2 with a subsidiary of 5.1.'' A new ''A'' code (A14) is added to prohibit this material from being transported as a limited quantity or consumer commodity in accordance with § 173.306 aboard an aircraft. This new ''A'' code has also been added to the following additional shipping names: ''Oxygen, compressed,'' Carbon dioxide and oxygen mixtures,'' ''Nitrous oxide'', ''Compressed gas oxidizing,'' and ''Liquefied gas, oxidizing.''

• For consistency, the authorization in Special Provision B69 to allow dry sodium or potassium cyanide in siftproof, water-resistant fiberboard IBCs is relocated to new Special Provision IP20.

• Paragraph (c)(4) of this section is amended by relocating ''Table 2.—Organic Peroxide IBC Code (IB52)'' to paragraph (e) of § 173.225 and renaming it the ''Organic Peroxide IBC Table.'' Table 3.—IP Codes is redesignated Table 2.—IP Codes. The wording of paragraph (c)(4) is revised to indicate that Table 3.—IP Codes had been redesignated Table 2.—IP Codes. All references to IB52 in the HMR are removed and replaced with ''Organic Peroxide IBC Table'' or ''§ 173.225(e),'' as applicable.

• Paragraph (c)(7) is amended by relocating the Portable Tank Code T50 Table to § 173.313 and renaming it ''UN Portable Tank Table for Liquefied Compressed Gases.'' The T50 Table and its description is removed from paragraph (c)(7)(iv) and replaced with a statement indicating that the new ''UN Portable Tank Table for Liquefied Compressed Gases'' is found in § 173.313. All references to T50 in the HMR are removed and replaced with ''UN Portable Tank Table for Liquefied Compressed Gases in § 173.313.'' In addition, paragraph (c)(7) is amended by relocating Portable Tank Code T23 to paragraph (g) of § 173.225 and renaming it the ''Organic Peroxide Portable Tank Table.'' Portable Tank Code T23 and its description found in paragraph (c)(7)(iii) are removed and paragraphs (c)(7)(iv)–(c)(7)(vii) are redesignated (c)(7)(iii)–(c)(7)(vi), respectively. All references to T23 in the HMR are removed and replaced with ''Organic Peroxide Portable Tank Table'' or ''§ 173.225(g),'' as applicable.

• New paragraph (c)(8) is added to provide an introduction to the ''TP'' codes (*i.e.*, portable tank special provisions). The existing paragraph (c)(8) is redesignated paragraph (c)(9).

• New Special IBC Packing Provision IP13 is added to specify that transportation by vessel in IBCs is prohibited.

• New Special IBC Packing Provision IP14 is added to specify that air must be eliminated from the vapor space by nitrogen purging or other means.

• New Special IBC Packing Provision IP20 is added to specify that dry sodium cyanide and potassium cyanide are also permitted in siftproof, water-resistant, fiberboard IBCs when transported in closed freight containers or transport vehicles.

• Portable tank Special Provision TP3 is revised to include the maximum degree of filling (in %) for solids transported above their melting points.

• Special Provision TP6 is revised by removing the word ''event'' and replacing it with the word ''incident.''

• Portable tank Special Provision TP9 is removed from column (7) of the HMT for all materials that reference a T code special provision. Special provision TP9 states that a material with TP9 in Column (7) may only be transported in a portable tank if approved by the Associate Administrator. A material that has been given a T code does not require approval and is not subject to Special Provision TP9.

• In the NPRM we proposed adoption of a new portable tank special provision, TP33, by adding the new provision to certain entries in the HMT. However, we neglected to include the text of the provision itself. We are correcting this omission in this final rule.

Section 172.202

We are editorially revising paragraph (a)(2)(iii) by removing the examples that illustrate the optional provision to enter primary and subsidiary hazard class or division names on shipping papers for domestic shipments. In the HM–215E response to appeals final rule (69 FR 34604) that was published on June 22, 2004, we reinstated the provision which was removed in a previous rulemaking (68 FR 44992). During the process of correcting a printing error in one of the examples, we determined that the regulatory text is complete and sufficient without the use of examples.

In the NPRM [69 FR 34741] we proposed to amend paragraph (a)(5)(i) to require the quantity shown on a shipping paper for an explosive article, such as Cartridges, small arms, to be the net mass of the entire article rather than the net mass of the explosive contained in the article. Commenters generally support the proposal, suggesting that it will provide for consistency across modes of transportation and for more accurate calculations. However, several of these commenters note that, for certain explosive articles that contain very small amounts of an explosive, showing the net mass of the article rather than of the explosive contained in the article could misrepresent the transportation risk associated with the article. Two commenters state that,

because shippers have historically calculated the net mass based on the actual explosive material contained in the article rather than the entire article, the clarification proposed in the NPRM could cause increased confusion for shippers.

Internationally, as well, there is some concern that, at least for large explosive articles, the quantity indicated on the shipping paper should be the net mass of the explosive substances contained in the article rather than the net mass of the article itself. As suggested by some commenters to the NPRM, a number of the members of UN Transport of Dangerous Goods Sub-Committee agree using the net mass of the entire article rather than the net mass of the explosive material contained in the article may not appropriately communicate the explosive hazard to emergency responders. Until this issue is resolved through a change to the UN Model Recommendations, we are, in this final rule, amending paragraph (a)(5)(i) to clarify that for explosive articles the quantity shown on a shipping paper may be expressed in terms of the net mass of the article or the net mass of the explosive substances contained in the article. It should be noted, however, that for purposes of determining the per-package quantity limitations shown in Column 9 of the HMT, § 172.101(j)(3) specifies that when articles or devices are specifically listed by name, the net quantity limitation applies to the entire article or device rather than to its hazardous components. This would include explosive articles listed by name in the HMT. For example, in the case of a listed explosive article weighing 15 kg and containing 500 grams of explosive substance, the weight shown on the shipping paper may be 500 grams or 15 kg, but the weight used for purposes of compliance with Column (9) of the HMT must be 15 kg as required by § 172.101(j)(3).

Particularly for large articles, the quantity indicated on the shipping paper should be the net mass of the explosive substances contained in the article. For small explosive articles, such as Cartridges, small arms, we believe that the net mass of the article can be used to satisfy the total quantity requirement in § 172.202(a)(5)(i). As a practical matter, it is easier, and in certain instances necessary, for an offeror to provide the net mass of the article and the net explosive mass. For example, as previously stated, the net mass of an article must be used to ensure compliance with the per package quantity limitations set forth in Column 9 of the § 172.101 Hazardous Materials Table for transport aboard aircraft or passenger rail (see § 172.101(j)(3)). However, for operational purposes, such as for stowage and segregation of large quantities of explosives or determining the quantity of explosives that can be transported on a vessel [see § 176.142(b)], the net explosive mass of the explosive substances contained in articles is needed.

Section 172.203

Paragraph (f) is revised by including the passenger and cargo aircraft limitation certification statement that is found in § 172.204. This aligns the HMR with the ICAO TI (see 4.1.5.8.1(b) of the ICAO TI). A new paragraph (i)(3) is added to specify additional shipping paper description requirements for a hazardous material consigned under an ''n.o.s.'' entry when offered for transportation by vessel. In addition, paragraph (m)(2) is revised to specify that the phrase ''Poison Inhalation Hazard'' or ''Toxic Inhalation Hazard'' is not required to be repeated if it otherwise appears in the shipping description. Finally, in paragraph (o)(3), the reference to § 173.225(c)(2) is amended to read § 173.225(b)(2).

One commenter felt the requirement to add a segregation code on the shipping paper for ''n.o.s.'' entries is unnecessary and unduly burdensome. In addition, the commenter is concerned that there may not be sufficient space on the shipping paper to indicate this notation. If, however, this requirement is adopted, the commenter requested an example of the required entry on shipping papers. We disagree. We do not feel this additional requirement is unnecessary or overly burdensome. The additional shipping paper description requirements apply only to hazardous material consigned under an ''n.o.s.'' entry when offered for transportation by vessel. We believe that consignors should be familiar with the hazards and segregation risks of their shipments, specifically ''n.o.s.'' materials that are not assigned segregation groups. By indicating the need to segregate such materials on the shipping paper, the consignor increases the likelihood that appropriate stowage procedures are followed, ensuring the safety of the vessel and its cargo. We also do not agree that there is inadequate space available on shipping papers to include the segregation group. However, we do agree that an example of the required entry should be presented for clarity and uniformity. Therefore, as recommended by the commenter, we are adding the example ''IMDG Code segregation group—1 Acids'' to § 172.203.

Section 172.204 and Section 172.321—Air Eligibility Marking

Under HM–215E (68 FR 44992), the air eligibility marking was adopted into the HMR as new § 172.321. Since publication of that final rule, the ICAO's Dangerous Goods Panel removed the air eligibility marking requirement from the ICAO Technical Instructions. In lieu of this marking, ICAO adopted a requirement that the shipping paper certification statement include the statement ''I declare that all of the applicable air transport requirements have been met'' when a hazardous material is offered for air transportation. Additionally, the revised section provided examples of the applicable air transport requirements that must be met. Based on this action, we revised the air eligibility marking requirement by making it optional rather than mandatory and adding the additional shipping paper certification statement for shipments going by aircraft. Therefore, we revised § 172.204(c)(3) by requiring that the statement ''I declare that all of the applicable air transport requirements have been met'' be included on the shipping paper in addition to the current certification statement when a hazardous material is offered for air transportation. Additionally, the revised section provides examples of the applicable air transport requirements that must be met and various section references. In order to allow shippers to expend stocks of preprinted shipping papers containing the previous certification statement, we are providing an additional ten month transitional provision for the new certification statement. Two commenters support RSPA's decision requiring shippers to sign the certification declaring compliance with requirements for air transportation. Additionally, several commenters agree with the revision to make the air eligibility marking optional. However, some commenters suggest making the marking ''permissible'' instead of ''optional'' to avoid potential confusion. We disagree. We are removing the requirement for shippers to mark packages acceptable for air transport with the air eligibility marking. This revision does not prohibit the use of the marking.

Section 172.315

Section 172.315 is amended to ensure that packages containing limited quantities which are transported by air are marked with the proper shipping name. Although the amendment was not proposed in this rulemaking, it was previously proposed and adopted under

HM–215E (68 FR 45000) but was omitted due to an editorial error during publication. The amendment provides harmonization with the ICAO Technical Instructions, which do not allow the UN number within a square-on-point border as a substitute for the proper shipping name. Note that this amendment does not preclude the ID number/square-on-point border from appearing on a package transported by air, it simply ensures that the proper shipping name is also required.

Section 172.317

A new § 172.317 is added to require a ''KEEP AWAY FROM HEAT'' handling mark on packages containing self-reactive substances of Division 4.1 or organic peroxides of Division 5.2 when such packages are transported by air.

Part 173

Section 173.3

The NPRM proposed to revise the requirements for use of salvage drums to include packages of hazardous materials that are found not to conform with the requirements of the HMR. In addition, the NPRM proposed to clarify that salvage drums may only be used for damaged, defective, non-conforming, or leaking packages identified as such after the packages have been placed in transportation. One commenter suggests that the phrase ''after having been placed in transportation'' as used in the NPRM is confusing and requests that we clarify the phrase using the terms ''pre-transportation functions'' and ''transportation functions'' as defined in a final rule published under Docket HM–223 October 30, 2003 (68 FR 61905). In response to this comment, in this final rule, we modified § 173.3(c) to clarify that salvage drums are to be used for damaged, defective, non-conforming, or leaking packages identified during transportation as ''transportation'' is defined in § 5102(12) of Federal hazardous materials transportation law—that is, the movement of property and loading, unloading, or storage incidental to the movement. When the HM–223 final rule becomes effective, the statutory definition for ''transportation'' will be added to § 171.8 of the HMR, as will definitions for ''movement,'' ''loading incidental to movement,'' ''unloading incidental to movement,'' and ''storage incidental to movement.'' Note that a package found to be leaking prior to its being placed in transportation may not be packaged in a salvage drum. Instead, it must be repackaged into an authorized packaging in accordance with applicable HMR requirements.

Section 173.24

For consistency with the UN Recommendations, paragraphs (g)(4) and (g)(5) are revised to clarify the following:

(A) That IBCs (subject to the requirements in § 173.24(g)) are permitted to be vented to reduce internal pressure; and

(B) That venting of IBCs is not conditional upon whether a bulk special provision is indicated for a particular hazardous material in the § 172.101 hazardous materials table.

In addition, paragraph (i) is revised to clarify that other general requirements specific to air transportation apply and are found in § 173.27.

Section 173.25

Paragraph (a)(2) is revised by removing the requirement to mark an overpack with the air eligibility marking. In addition, in paragraph (a)(4), we are amending the HMR to require overpacks to be marked with the word ''OVERPACK'' or, alternatively, until October 1, 2007, with a statement indicating that inside packages comply with prescribed specifications. This is in response to adoption by the United Nations of the ''OVERPACK'' marking to indicate that packages within an overpack comply with prescribed specifications when specification markings on inside packagings within the overpack are not visible.

Section 173.27

Paragraph (i) is revised to indicate that the air eligibility mark has been removed. This section references a new requirement for shippers to place the following statement at the end of the certification statement when a hazardous material is authorized for air transportation: ''I declare that all applicable air transport requirements have been met.''

Section 173.28

In paragraph (c)(2), we deleted the words ''or a UN 1H1 plastic drum'' in order to harmonize the HMR with the UN Model Regulations and remove a source of confusion within the regulated community regarding the reconditioning of a non-bulk packaging.

Section 173.115

In § 173.115, a new paragraph (k) is added (see discussion under § 172.102, Special Provision 153). One commenter noted that the proposed new § 173.115(k) would not allow aerosols to contain corrosive substances of Packing Group II. The commenter further noted that UN Special Provision 63 allows aerosols to contain corrosive substances of Packing Group II and requested we harmonize with the UN Special Provision 63 in this regard. We agree with the commenter and further note that currently, the HMR authorizes a proper shipping name of ''Aerosols, corrosive Packing Group II or III, each not exceeding 1 L capacity''. We are amending § 173.115(k) accordingly to clarify that aerosols may contain corrosive substances of Packing Group II.

Section 173.120 and Appendix H to Part 173

A commenter noted that under section § 173.120(a)(3), the reference to Appendix H for sustained combustibility tests directs the reader to Figures 5.1 and 5.2 found in the UN Recommendations. These figures are no longer in the UN Recommendations, but, rather, are located in section 32.5.2 of the Fourth Revised Edition of the UN Manual of Tests and Criteria. We agree with the commenter. Therefore, we are amending Appendix H to Part 173 to reference the UN Manual of Tests and Criteria.

Section 173.128

In paragraph (d)(1)(i), the section reference is revised to read § 173.225(c). In addition, in paragraphs (d)(1)(ii) and (d)(1)(iii), the section reference is revised to read § 173.225(b).

Section 173.132

In paragraph (b)(1), we revised the definition of LD^{50} for acute oral toxicity to indicate that adult albino rats may be tested without regard to gender. The current definition for LD^{50} for acute oral toxicity in § 173.132(b)(1) is based on the Organization for Economic Co-Operation and Development (OECD) Test Guideline (TG) 401. The OECD has agreed to three test methods that will replace the current TG 401. The United Kingdom, Germany and the United States of America took the lead in the development of the three alternative tests that OECD has now adopted and published in the OECD Guidelines for the Testing of Chemicals. In a continuing attempt to improve the estimate of acute oral toxicity while reducing the number of animals used per test, three alternative TGs have been developed and implemented to replace TG 401. The three TGs are the Fixed Dose Procedure (FDP, TG 420), the Acute Toxic Class Method (ATCM, TG 423), and the Up-and-Down Procedure (UDP, TG 425). The text is consistent

with the text in the 13th revised edition of the UN Model Regulations.

Section 173.136

We added a new paragraph (d) to provide a grandfather clause that will allow for the continued shipment of materials classified as corrosive to steel or aluminum under ASTM G 31–72 without retesting.

Section 173.137

In paragraph (c)(2), we propose to eliminate the references to ASTM G 31–72 as an acceptable test description and add a statement indicating an acceptable test is prescribed in the Manual of Tests and Criteria, Part III, Section 37.

Sections 173.150, 173.151, 173.152, 173.153 and 173.154

We are allowing most Division 6.1, Packing Group II materials to be transported under the limited quantity provisions when the packagings contain not more than 100 mL (3.38 ounces) each for liquids or 0.5 kg (1.1 pounds) each for solids. However, consistent with the limited quantity authorization for Division 6.1, Packing Group III, we are not providing a labeling exception for these materials. We are also not allowing these materials to be shipped as consumer commodities. In addition, we revised the limited quantity sections for the other hazard classes of materials to take into account materials with a subsidiary hazard of 6.1 Packing Group II. One commenter agreed with the amendment allowing numerous Class 3, PG II materials with Class 8 and other subsidiary hazards to be transported as limited quantities.

Section 173.185

In § 173.185, we amended paragraphs (c)(3) and (e)(6), to require those lithium cell and battery design types that are required to be subjected to the UN performance tests to be of a type that is proven to meet the requirements of the performance tests specified in the UN Manual of Tests and Criteria, Fourth Revised Edition. These cells and batteries are currently required to be of a type that is proven to meet the tests in the third revised edition. We also proposed a grandfather provision that would authorize a lithium cell or battery that was transported prior to the effective date of this rule that is of a type proven to meet the UN performance tests in the third revised edition to not be required to be retested in accordance with the tests in the fourth revised edition. One commenter supported this approach and stated that it is both necessary and appropriate to allow continued transport of cells and batteries tested and qualified under the UN lithium battery design qualification tests in accordance with the UN Manual of Tests and Criteria, Third Revised Edition. The commenter further stated that providing a grandfather provision for previously tested cells and batteries would avoid the need and expense of requalifying these cells and batteries in accordance with the new tests prescribed in the Fourth Revised Edition of the UN Manual of Tests and Criteria. After further consideration, we believe that authorizing an indefinite period for the transport of batteries that were tested in accordance with the UN Manual of Tests and Criteria, Third Revised Edition, 1999 may not be in the best interest of safety. The tests in the UN Manual of Tests and Criteria, Fourth Revised Edition provide a slightly higher level of safety and we believe that further consideration needs to be taken in considering whether at some point in time all applicable lithium batteries and cell design types should be proven to meet the requirements of the UN Manual of Tests and Criteria, Fourth Revised Edition. As a result, we will issue a proposal shortly specifically to address the full unrestricted adoption of the Fourth Revised Edition of the UN Manual of Tests and Criteria.

Section 173.186

In § 173.186, in paragraph (e), we amended the gross weight for UN 4G outer packages authorized for the transportation of strike-anywhere matches, to be consistent with the UN Model Regulations by increasing the weight from 27 kg (60 pounds) to 30 kg (66 pounds).

Section 173.187

We revised § 173.187 to authorize certain solid hazardous materials to be transported in DOT specification cylinders other than Specification 8 and 3HT cylinders. This change eliminates the need for DOT Exemption ''DOT–E 11548.''

Sections 173.211, 173.212, and 173.213

We revised these sections to authorize certain solid hazardous materials to be transported in DOT specification cylinders other than Specification 8 and 3HT cylinders. This change removed the need for DOT Exemption ''DOT–E 11548.''

Section 173.219

We revised § 173.219 for consistency with the UN Model Regulations and the ICAO Technical Instructions. Included in the revision is an allowance for self-inflating life-saving appliances to contain cartridges, power devices of Division 1.4S, for purposes of the self-inflating mechanism. In addition, we provided an exception from regulation for life-saving appliances containing only carbon dioxide cylinders not exceeding 100 cm^3 capacity, provided they are overpacked in rigid outer packagings with a maximum gross mass of 40 kg. Finally, the limitations currently found in Special Provision 143 are relocated to § 173.219 (see preamble discussion under Special Provision 143).

Section 173.220

Paragraph (b)(2) is amended to harmonize the requirements for transporting flammable gas powered vehicles by air with the requirements of Packing Instruction 900 of the ICAO Technical Instructions.

Section 173.224

Paragraph (b)(4) of this section is amended to include the new references for § 173.225. The section reference to § 173.225(e) for the authorization of bulk packagings is replaced with § 173.225(f) for IBCs and § 173.225(h) for other bulk packagings.

Section 173.225

This section is amended to update the Organic Peroxide Table and eliminate special provisions IB52 and T23 from § 172.102(c). The purpose of the change is to consolidate the packaging requirements for organic peroxides into one section and to have separate tables for organic peroxides authorized for transport in non-bulk packagings, IBCs, and bulk packagings other than IBCs. The changes are as follows:

Paragraph (a) is revised by adding paragraphs (b) and (b)(6), which state that bulk packagings may require a lower control temperature than those specified for non-bulk packagings and that an organic peroxide not identified in either the Organic Peroxide Table, Organic Peroxide IBC Table, or Organic Peroxide Portable Tank Table must be approved under § 173.128(c).

Paragraph (b) is revised to eliminate all IBC and other bulk packaging authorizations from column 6 of the Organic Peroxide Table. Various obsolete entries were also removed. The current paragraph (b), ''Organic Peroxide Table,'' is moved to paragraph (c) and the current paragraph (c), ''New organic peroxides, formulations and samples,'' is moved to paragraph (b).

The notes following the Organic Peroxide Table are changed as follows:

- Revise note 22 to indicate that ethylbenzene with greater than or equal to 25% of dilutant type A is acceptable.

• Revise note 23 to indicate that methyl isobutyl keytone with greater than or equal to 19% of dilutant type A is acceptable.

• Add a new note 29 to identify materials which are not included in the UN Model Regulations and note that a Competent Authority approval is required for international transportation.

• Remove Notes 9, 11, and 14 following the Organic Peroxide Table.

In addition, The Packing Method Table found in paragraph (d), is revised by replacing the 200 kg maximum quantity for solids and combination packagings listed in OP8 with a 400 kg maximum quantity. Note 2, following the table, is revised to allow 200 kg of solid material per box and up to 400 kg of material per authorized combination packaging. The note also indicates that the outer packaging must be a box (4C1, 4C2, 4D, 4F, 4G, 4H1, and 4H2) and each inner packaging must be of plastics or fiber with a maximum net mass of 25 kg. Paragraph (d)(3) is clarified by revising the text to state that the maximum content acceptable for glass receptacles used as inner packagings of a combination packaging is 0.5 kg for solids or 0.5 L for liquids.

A new paragraph (e) is added to include the new ''Organic Peroxide IBC Table'' that replaces the current ''Table 2.—Organic Peroxide IBC Code (IB52)'' in § 172.102(c)(4). The new table is revised to add an organic peroxide, ''Dicyclohexylperoxydicarbonate, not more than 42% as a stable dispersion, in water.'' In addition, the new Organic Peroxide IBC Table identifies, by technical name, those organic peroxides authorized for transportation in the IBCs that are specifically listed in the table.

A new paragraph (f) is added to include the current IBC requirements contained in paragraph (e)(5) of this section. Paragraph (f) also includes requirements that are specific to organic peroxides packaged in IBCs.

A new paragraph (g) is added to include the new ''Organic Peroxide Portable Tank Table,'' that replaces the current ''Portable Tank Code T23'' found in § 172.102(c)(7)(iii). The new table is identical to the current table except that for UN 3109, in the entry for Pinanyl hydroperoxyde, 50% is replaced by 56% and all references to self-reactive materials are removed. In addition, the Organic Peroxide Portable Tank Table provides certain portable tank requirements and identifies, by technical name, those organic peroxides authorized for transportation in the bulk packagings listed in the new paragraph (h).

The current paragraph (e) is redesignated as paragraph (h). Paragraph (h) establishes requirements that are specific to organic peroxides packaged in certain bulk packagings. Additionally, the new ''Note to Paragraph (h)(3)(vi)'' is revised to include changes brought forth by petition for rulemaking P–1428. The petition proposed to amend the current paragraph (e)(3)(vi) and allow for a second but equally acceptable example of an emergency-relief device sizing method to be added to the HMR. We agreed with the petitioner and added a statement to the new paragraph (h)(3)(vi) indicating that an additional example of an emergency-relief device sizing method can be found in the ''American Institute of Chemical Engineers Process Safety Progress Journal, June 2002 issue (Vol. 21, No. 2)'' as referenced in § 171.7(b).

The changes to this section altered the order of the paragraphs within this section; therefore, various citations were changed. Also, paragraphs referencing IB52 or TP23 are revised to indicate that those provisions no longer exist and the updated requirements are found in paragraph (e) and (g), respectively. A commenter requested that § 173.225 be revised to allow for increased industry flexibility, regulatory uniformity, and to better align with the UN Recommendations. We agree and have made the following revisions:

• Added wording to 173.225(a) to show that organic peroxides that are not identified in the organic peroxide table, but are in paragraph (b)(3) are not subject to the requirements of § 173.128.

• Removed Note 1 from both entries of tert-Butyl cumyl peroxide and Note 11 from Dicumyl peroxide.

• Removed the sentence ''The additional requirements in paragraph (h)(5)(i) and (h)(5)(ii) of this section also apply'' from § 173.225(f) and renumbered (f)(i) and (f)(ii) as (f)(1) and (f)(2), respectively.

• Revised the introductory text to Paragraph (h) to indicate that the bulk packagings that follow are for materials authorized for transport in a bulk packaging by Paragraph (h) and organic peroxides listed in the Organic Peroxide Portable Tank Table.

• Removed two occurrences of the term ''Type F'' from Paragraph (h)(3) to broaden the applicability of the provisions.

• Removed statement from § 173.225(h)(3)(xii) indicating that DOT Specification 57 portable tanks are not subject to the requirements of paragraphs (h)(3)(ii) and (h)(3)(iv) of this section.

Sections 173.226 and 173.227

We revised the packaging requirements of §§ 173.226 and 173.227 for materials poisonous by inhalation, Division 6.1, Packing Group I, Hazardous Zone A and Hazard Zone B. These amendments have: Reduced the hydrostatic test pressure of the inner drum in a drum-within-a-drum configuration authorized in § 173.226(b); standardized the minimum thickness requirements of the inner drums in the drum-within-a-drum configuration authorized in §§ 173.226(b) and 173.227(b); clarified the test requirements for inner packaging systems in § 173.226(b)(2)(iv); and in § 173.226(d) added a provision to authorize transportation of PIH materials in single packages when subjected to additional operational controls and approved by the Associate Administrator. Section 173.226(c)(2) is reformatted for ease of understanding. We removed an expired transitional date from paragraph (a) that allows the transport of welded cylinders filled before October 1, 2003 for the purpose of reprocessing or disposal of cylinders's content until December 31, 2003. One commenter recommended that we include a provision in § 173.227(b) to allow for the testing of the outer drum of a drum-in-drum package as either as a package intended to contain inner packagings (combination package) or as a single packaging intended to contain solids or liquids. We agree and have revised § 173.227(b) accordingly. Another commenter suggested that we increase the minimum thickness of a UN 1A1 drum in PIH service from .69 mm to 1.0 mm. Increasing the minimum thickness of a UN 1A1 drum in PIH service was not proposed in this rulemaking and inclusion of such a requirement is beyond the scope of this rulemaking. However, we are reviewing this request for consideration in a future rulemaking.

Section 173.249

Paragraph (c) is revised to be consistent with the current ''Bromine'' entry in the § 172.101 ''Hazardous Material Table'' that authorizes the use of a UN portable tank conforming to tank code T22. A commenter suggested that we include a provision authorizing the returning of a tank containing bromine residue. We agree that such a provision is necessary and have amended § 173.249 accordingly.

Sections 173.306 and 173.307

To add clarity to the HMR, the text currently found in § 173.306(i) is removed and replaced with the text

currently found in § 173.307(a)(5). Since § 173.306 is devoted exclusively to limited quantities of compressed gases, relocating § 173.307(a)(5) to § 173.306 makes the exception easier to find.

Section 173.313

A new § 173.313 is added to serve as the new location for the Portable Tank Code T50 Table. The table is renamed ''UN Portable Tank Table for Liquefied Compressed Gases.'' The table provides the maximum allowable working pressures, bottom opening requirements, pressure relief requirements and degree of filling requirements for liquefied compressed gases permitted for transport in portable tanks. The change relocates these packaging requirements to Part 173, which is a more appropriate location, and makes the special provisions less cumbersome. In addition, the new UN Portable Tank Table for Liquefied Compressed Gases is amended by revising the Column 3 heading to read ''Minimum design pressure (bar) * * *'' The values in column 3 are actually minimum values, however the title of the column is misleading because it uses the term ''Maximum allowable working pressure (bar) * * *''

Section 173.315

In paragraph (a), the reference to ''portable tank provision T50 in § 172.102'' is revised to read ''the UN Portable Tank Table for Liquefied Compressed Gases in § 173.313.''

Section 173.323

After further considering the proposed changes to the packaging authorizations for ethylene oxide in § 173.323, we noted that the total quantity per package of ethylene oxide authorized for transport when glass inner receptacles are used was proposed to be increased from 100 grams to 2.5 kg. Due to the extremely flammable and explosive properties of ethylene oxide and the fragile properties of glass, after further consideration we have chosen not to adopt the 2.5 kg outer package limit found in the UN Recommendations and to retain our current outer package limit of 100 grams. The total quantity per package when metal inner receptacles are used will remain unchanged from the proposed 2.5 kg. In this rule, paragraphs (b)(1)–(b)(3) are revised and consolidated for consistency with current international requirements for the transportation of ethylene oxide in combination packagings. Paragraphs (b)(1)–(b)(3) provide the current authorizations for glass, aluminum, and metal receptacles respectively. Amendments to this section include (1) removing the HMR limitation of 12 inner receptacles per outer package currently applied to aluminum and other metal receptacles, (2) removing the overpack restriction in (b)(2) which specifies a maximum of 10 boxes per overpack, (3) requiring a hot water bath test for all inner receptacles, (4) removing the pressure relief device and burst pressure requirements currently applied to metal receptacles, (5) applying the same outer package authorizations consistently to all inner packaging types and allowing any outer package authorized in § 172.201(b), and (6) requiring all inner packagings to be suitably cushioned (the top and bottom pad and perimeter liner requirement currently only applied to outer packages containing aluminum inner packagings is removed). Though we are eliminating the option to utilize certain packaging authorizations for glass and aluminum inner packagings, we believe that this change will have little or no economic impact on the ethylene oxide industry because of the amount of materials that are transported in international commerce. 3M Package Engineering requested that we reduce the maximum quantity of ethylene oxide permitted in any metal inner packaging from 340 g (12 ounces) to 200 g (7 ounces). They stated that such a change would more adequately align the HMR with international standards. We agree that such a change would align the HMR with international requirements. However, allowing a metal inner packaging to contain a maximum quantity of 340 g (12 ounces) does not limit compliance with international requirements. In addition, we cannot adopt the 200 g (7 ounces) limitation in this rulemaking because such a change would be more restrictive then the requirements we proposed. We may consider adopting the 200 g (7 ounces) limitation in a future rulemaking.

Part 175

Section 175.10

Consistent with an amendment to the ICAO TI, we are requiring that aerosol cans that are carried aboard an aircraft in accordance with § 175.10(a)(4) have their release devices protected by a cap or other suitable means. In addition, the ICAO Dangerous Goods Panel will convene a series of working groups to develop recommendations for consideration during the 20th session of the Dangerous Goods Panel to further review this issue. These recommendations may lead to additional amendments to the ICAO TI. Finally, we note that non-flammable gases (*e.g.*, nitrogen) other than carbon dioxide are used for the operation of mechanical limbs. Consistent with an amendment to the ICAO TI, we are proposing to provide an exception from the HMR for mechanical limbs that are powered by any Division 2.2 gas. One commenter recommended that the release device requirements added to § 175.10 also be incorporated into Part 173. Specifically, they requested that aerosol cans that are transported in commerce be protected by a cap or other suitable means to prevent inadvertent release. They indicated that this change should be coordinated with the Federal Aviation Administration (FAA). We disagree. Section 173.24(b)(1) states that each package used for the shipment of hazardous materials must be constructed, maintained, filled, its contents so limited, and closed, so that under conditions normally incident to transportation there will be no identifiable release of hazardous materials to the environment. We feel this section adequately addresses the commenter's concerns, and allows shippers the flexibility to properly protect aerosol cans.

Section 175.85

In § 175.85, a new paragraph (j) is added to specify the cargo location of a package bearing the ''KEEP AWAY FROM HEAT'' handling marking.

Part 176

Section 176.2

Certain definitions are revised. The definitions for ''Explosive article'' and ''Explosive substance'' are revised to remove an incorrect reference. The definition for ''Magazine'' is revised to include a compartment in the vessel. The definition for ''Magazine'' is also revised to specify vessel storage location and accessibility. The term ''Transport unit'' is revised to read ''Cargo transport unit'' to be consistent with Amendment 32 of the IMDG Code. In addition, in the definition ''In containers or the like'' the term ''transport unit'' is removed and the term ''cargo transport unit'' is added in its place.

Section 176.27

In this section, the words ''transport unit'' are replaced with the words ''transport vehicle'' in each place they appear to be consistent with the removal of the term ''transport unit'' from the definitions in § 176.2.

Section 176.63

Paragraph (e) is revised to align the definition of ''Closed cargo transport unit'' to be consistent with the

definition in Amendment 32 of the IMDG Code.

Section 176.76

Paragraph (i) is revised to clarify that for container ships, a distance equivalent to one container space athwartships (*i.e.*, in the direction of the breadth of the vessel) away from possible sources of ignition applied in any direction satisfies the requirement that a cargo transport unit packed or loaded with flammable gas or flammable liquid having a flashpoint below +23 °C transported on deck be stowed ''away from'' possible ignition sources. This is consistent with Amendment 32 of the IMDG Code. In addition, in paragraphs (h) and (i), the words ''transport unit'' are removed and replaced with the words ''cargo transport unit'' in each place they appear to be consistent with Amendment 32 of the IMDG.

Section 176.83

Paragraph (l) is revised to correct an error pertaining to the Segregation Table that sets forth the general requirements for segregation of containers on board hatchless container vessels. In addition, throughout the section the words ''transport units'' are removed and replaced with the words ''cargo transport units'' in each place they appear to be consistent with Amendment 32 of the IMDG. A new paragraph (m) is added to specify the provisions for segregation groups.

Section 176.84

Paragraph (a) is revised to specify the various chemical groups listed in the segregation table. In the paragraph (b) Table of Provisions, we added eleven new provisions (codes) for certain stowage and segregation requirements for hazardous materials that are transported by vessel. In addition, in paragraph (c)(2) Provisions for the stowage of Class 1 (explosive) materials, we revised three notes. The terms ''separated from'' and ''away from'' in the codes are defined in § 176.83 of the HMR.

Code 133 is added to the entries ''Barium chlorate solution,'' UN3405; ''Barium perchlorate solution,'' UN3406; and ''Chlorate and magnesium chloride mixture solution,'' UN3407, that requires the material to be stowed ''separated from'' sulfur.

Code 134 is added to the entry ''Aluminum alkyl halides, solid,'' UN3461, that requires the material to be stowed ''separated from'' UN2716.

Code 135 is added to the entries ''Methylamine, aqueous solution,'' UN1235 and ''Trimethylamine, aqueous solutions,'' UN1297, that requires the material to be stowed ''separated from'' mercury and mercury compounds.

Code 136 is added to the entry ''Tributylphosphane,'' UN3254, that requires the material to be stowed ''separated from'' carbon tetrachloride.

Code 137 is added to the entries ''Arsenic compounds, liquid, n.o.s.,'' UN1556 and ''Arsenic compounds, solid, n.o.s.,'' UN1557, that requires arsenic sulphides to be stowed ''separated from'' acids.

Code 138 is added to the entries for UN1448; UN1456; UN1479; UN1482; UN1490; UN1503; UN1515; UN3085; UN3087; UN3098; UN3099; UN3139; and UN3214, that requires the material to be stowed ''separated from'' peroxides.

Code 139 is added to the entry ''1, 4-Butynediol,'' UN2716, that requires the material to be stowed ''separated from'' mercury salts.

Code 140 is added to the entry ''1, 4-Butynediol,'' UN2716, that requires the material to be stowed ''separated from'' UN3052 and UN3461.

Code 141 is added to the entries for UN1732; UN1755; UN1806; UN1908; UN2433; UN2859; and UN2861, that requires the material to be stowed ''away from'' radioactive materials.

Code 142 is added to the entries for UN1748; UN2208; and UN2880, that requires packages in cargo transport units to be stowed so as to allow for adequate air circulation throughout the cargo.

Code 143 is added to the entry for Organometallic Substance, Liquid, Pyrophoric, UN3392, prohibiting transportation on any vessel carrying explosives (except explosives in Division 1.4, compatibility group S.

Note 19E is revised to specify that materials under entries NA0331; UN0004; UN0222; UN0241; and UN0402 must be stowed ''away from'' explosives containing chlorates or perchlorates.

Note 22E is revised to specify that materials under the entry ''Explosive, blasting, type C,'' must be stowed ''away from'' ammonium compounds and explosives containing ammonium compounds or salts.

Note 23E is revised to specify that materials under entries UN0247; UN0395; UN0396; UN0397; UN0398; UN0399; UN0400; UN0449; and UN0450 must be ''separated from'' Division 1.4 and ''separated longitudinally by an intervening complete compartment or hold from'' Division 1.1, 1.2, 1.3, 1.5, and 1.6 except from explosives of compatibility group J.

A commenter questioned how adequate air circulation was achieved in a cargo transport unit. In addition, the commenter stated that it fails to understand why air circulation is necessary in a closed cargo transport unit, as indicated by Stowage Provision 142. Stowage Provision 142 indicates that packages in cargo transport units must be stowed so as to allow for adequate air circulation throughout the cargo. We feel cargo transport units that are properly loaded will allow for the adequate circulation of air by natural means so as to safeguard against excessive heat buildup within the cargo.

Section 176.116

In paragraph (c), the words ''transport units'' are revised to read ''cargo transport units.'' In addition, a new paragraph (f) is added to specify the under deck stowage requirements of Class 1 (explosive) materials allocated stowage categories 09 and 10.

Sections 176.122 and 176.124

Sections 176.122 and 176.124 are removed and reserved.

Section 176.128

In § 176.128, the section heading and section are revised.

Section 176.132

Section 176.132 is removed and reserved.

Section 176.133

Section 176.133 is revised to clarify the construction and stowage location requirements for magazine stowage type C.

Section 176.136

Section 176.136 is revised to clarify the special stowage requirements of Class 1 (explosive) materials. In addition, minor editorial revisions are made.

Section 176.138

Paragraph (a) is removed and reserved to be consistent with Amendment 32 of the IMDG Code. This paragraph currently requires Class 1 (explosive) material that is stowed on deck to be carried as close to the vessel's centerline as practicable.(See also change to § 176.170.)

Section 176.142

Paragraph (a) is revised to remove ''Pyrophoric organometallic compound, water-reactive, n.o.s.'' from the list of liquid hazardous materials of extreme flammability that may not be transported in a vessel carrying Class 1 (explosive) materials. Additionally, we added to the above list the following new liquid entries:

• ''Organometallic substance, liquid, pyrophoric, UN3392''
• ''Organometallic substance, liquid, pyrophoric, water-reactive, UN3394''

These changes are consistent with Amendment 32 of the IMDG Code.

Section 176.144

In this section, the words ''transport unit'' are replaced with the words ''cargo transport unit'' in each place they appear to be consistent with the definition in Amendment 32 of the IMDG Code. Additional notes are added to Table 176.144(a)—''Authorized Mixed Stowage For Explosives'' to address additional exceptions for mixed stowage of Class 1 materials.

Section 176.146

In § 176.146, in paragraph (d)(1), the wording ''transport units'' is revised to read ''cargo transport units.''

Section 176.168

In § 176.168, in the title before the section heading, the wording ''TRANSPORT UNITS AND SHIPBORNE BARGES'' are revised to read ''CARGO TRANSPORT UNITS AND SHIPBORNE BARGES.''

Section 176.170

A new paragraph (b) is added to prohibit freight containers loaded with Class 1 (explosive) materials, except for explosives in Division 1.4, from being stowed in the outermost row of containers. This change is consistent with Amendment 32 of the IMDG Code.

Section 176.174

Paragraphs (a) and (b) are revised to remove the references to portable magazines. This change is consistent with Amendment 32 of the IMDG Code.

Section 176.600

In § 176.600, in paragraph (a), the wording ''closed transport units'' is revised to read ''closed cargo transport units.''

Part 178

Section 178.274

Paragraph (f)(v) is revised to more clearly specify the rated flow capacity marking required to be placed on every UN portable tank's pressure relief device.

Section 178.275

Paragraph (i)(2) is revised to more clearly specify the combined delivery capacity of UN portable tank's pressure relief systems.

Section 178.276

In paragraph (a)(4)(ii)(A), the reference to ''portable tank special provision T50'' is revised to read ''the UN Portable Tank Table for Liquefied Compressed Gases in § 173.313.'' In addition, paragraph (d), the reference to ''portable tank special provision T50 in § 172.102(c)(7)'' is revised to read ''UN Portable Tank Table for Liquefied Compressed Gases in § 173.313.'' Finally, in paragraph (e)(3), the reference to ''portable tank special provision T50 in § 172.102'' is revised to read ''the UN Portable Tank Table for Liquefied Compressed Gases in § 173.313.''

Section 178.602

Paragraph (b) is revised to clarify the requirements applicable to filling packaging other than bags in preparation for testing.

Section 178.603

Paragraph (c) is revised to add a definition indicating that a minimum specific gravity for solutions of water and anti-freeze is 0.95 for testing at 18 °C (0 °F) or lower. Additionally, in paragraph (e), we specify the drop test height for liquids in single packagings and for inner packagings of combination packagings, when the test is performed in water.

Section 178.810

Paragraph (b)(3) is revised to specify that water/anti-freeze solutions with a minimum specific gravity of 0.95 for testing at −18 °C (0 °F) or lower are acceptable test liquids for use when conducting IBC drop tests. This is consistent with our amendment to § 178.603(c)(1) regarding the testing of non-bulk packages. In addition, we added a sentence to clarify that when conditioning is required by § 178.810(b), the conditioning specified in § 178.802 (which requires a higher temperature) does not apply.We received a comment from the Reusable Industrial Packaging Association (RIPA) concerning this revision. RIPA believes that RSPA intended to clarify that water/antifreeze solutions with a minimum specific gravity of 0.95 are equivalent for testing purposes to IBCs containing only water, thereby eliminating the need to adjust the drop height of test units. RIPA stated that § 178.810(b)(3) should be revised to indicate that this solution may be considered equivalent to water for testing purposes. We agree and have revised the section accordingly.

Part 180

Section 180.350

Paragraph (c) is revised to expand the definition of routine maintenance of IBCs to include flexible, plastic and textile IBCs.

Section 180.352

Paragraph (d)(1)(iv) is revised to require persons other than the owner of metal, rigid plastics, and composite IBCs to mark the IBC indicating routine maintenance has been performed when such maintenance is performed. A new paragraph (d)(1)(v) is added to this section. This paragraph states that retests and inspections performed under paragraphs (d)(1)(i) and (ii) of this section may be used to satisfy the tests and inspections required by paragraph (b) of this section. This addition incorporates changes made to the 12th revised edition of the Transport of Dangerous Goods Model Regulations into the HMR. Three commenters requested that we revise § 180.352 to distinguish requirements applicable to repair and routine maintenance of IBCs. We agree and have revised § 180.352 creating a new paragraph entitled, ''Requirements applicable to routine maintenance of IBCs.''

V. Regulatory Analyses and Notices

A. Statutory/Legal Authority for This Rulemaking

This final rule is published under the following statutory authorities:

1. 49 U.S.C. 5103(b) authorizes the Secretary of Transportation to prescribe regulations for the safe transportation, including security, of hazardous material in intrastate, interstate, and foreign commerce. This final rule amends regulations to maintain alignment with international standards by incorporating various amendments, including changes to proper shipping names, hazard classes, packing groups, special provisions, packaging authorizations, air transport quantity limitations and vessel stowage requirements. To this end, as discussed in detail earlier in this preamble, the final rule amends the HMR to more fully align it with the biennial updates of the UN Recommendations, the IMDG Code and the ICAO Technical Instructions to facilitate the transport of hazardous materials in international commerce.

2. 49 U.S.C. 5120(b) authorizes the Secretary of Transportation to ensure that, to the extent practicable, regulations governing the transportation of hazardous materials in commerce are consistent with standards adopted by international authorities. This final rule amends the HMR to maintain alignment with international standards by incorporating various amendments to facilitate the transport of hazardous material in international commerce. To this end, as discussed in detail earlier in this preamble, the final rule incorporates changes into the HMR

based on the Thirteenth Revised Edition of the UN Recommendation, Amendment 32 to the IMDG Code, and the 2005–2006 ICAO Technical Instructions, which become effective January 1, 2005. The continually increasing amount of hazardous materials transported in international commerce warrants the harmonization of domestic and international requirements to the greatest extent possible. Harmonization serves to facilitate international transportation; at the same time, harmonization ensures the safety of people, property, and the environment by reducing the potential for confusion and misunderstanding that could result if shippers and transporters were required to comply with two or more conflicting sets of regulatory requirements. While the intent of this rulemaking is to align the HMR with international standards, we review and consider each amendment on its own merit based on its overall impact on transportation safety and the economic implications associated with its adoption into the HMR. Our goal is to harmonize without sacrificing the current HMR level of safety and without imposing undue burdens on the regulated public. Thus, as discussed in detail earlier in this preamble, there are several instances where we elected not to adopt a specific provision of the UN Recommendations, the IMDG Code or the ICAO Technical Instructions; further, we are maintaining a number of current exceptions for domestic transportation that should minimize the compliance burden on the regulated community.

B. Executive Order 12866 and DOT Regulatory Policies and Procedures

This final rule is not considered a significant regulatory action under section 3(f) of Executive Order 12866 and, therefore, was not reviewed by the Office of Management and Budget. This final rule is not considered a significant rule under the Regulatory Policies and Procedures of the Department of Transportation [44 FR 11034]. Benefits resulting from the adoption of the amendments in this final rule include enhanced transportation safety resulting from the consistency of domestic and international hazard communications and continued access to foreign markets by domestic shippers of hazardous materials. This final rule applies to offerors and carriers of hazardous materials, such as chemical manufacturers, chemical users and suppliers, packaging manufacturers, distributors, battery manufacturers, radiopharmaceutical companies, and training companies.

The majority of amendments in this final rule should result in cost savings and ease the regulatory compliance burden for shippers engaged in domestic and international commerce, including trans-border shipments within North America. For example, cost savings will be realized by shippers and carriers as a result of the following:

—Eliminating the air eligibility marking requirement.
—Amendments allowing numerous Class 3, PG II materials with a Class 8 sub-risk and others to be transported as a limited quantity.
—Allowing cylinders to be used for many more substances than currently authorized.
—Allowing salvage packagings to be used for non-conforming packages; and generally minimizing differences between U.S. and international hazardous materials transportation regulations.

We are authorizing a delayed effective date and a one-year transition period to allow for training of employees and to ease any burden on entities affected by the amendments. The total net increase in costs to businesses in implementing this rulemaking is considered to be minimal and a regulatory evaluation is available for review in the Docket.

C. Executive Order 13132

This final rule has been analyzed in accordance with the principles and criteria contained in Executive Order 13132 (''Federalism''). This final rule preempts State, local and Indian tribe requirements but does not propose any regulation that has substantial direct effects on the States, the relationship between the national government and the States, or the distribution of power and responsibilities among the various levels of government. Therefore, the consultation and funding requirements of Executive Order 13132 do not apply.

The Federal hazardous material transportation law, 49 U.S.C. 5101–5127, contains an express preemption provision (49 U.S.C. 5125(b)) that preempts State, local, and Indian tribe requirements on certain covered subjects. Covered subjects are:

(1) The designation, description, and classification of hazardous materials;

(2) The packing, repacking, handling, labeling, marking, and placarding of hazardous materials;

(3) The preparation, execution, and use of shipping documents related to hazardous materials and requirements related to the number, contents, and placement of those documents;

(4) The written notification, recording, and reporting of the unintentional release in transportation of hazardous; and

(5) The design, manufacture, fabrication, marking, maintenance, recondition, repair, or testing of a packaging or container represented, marked, certified, or sold as qualified for use in transporting hazardous material.

This final rule addresses covered subject items (1), (2), (3), and (5) above and preempts State, local, and Indian tribe requirements not meeting the ''substantively the same'' standard. This final rule is necessary to incorporate changes adopted in international standards, effective January 1, 2005. If the changes in this final rule are not adopted in the HMR, U.S. companies, including numerous small entities competing in foreign markets, are at an economic disadvantage. These companies are forced to comply with a dual system of regulations. The changes in this rulemaking are intended to avoid this result. Federal hazardous materials transportation law provides at section 5125(b)(2) that, if DOT issues a regulation concerning any of the covered subjects, DOT must determine and publish in the **Federal Register** the effective date of Federal preemption. The effective date may not be earlier than the 90th day following the date of issuance of the final rule and not later than two years after the date of issuance. The effective date of Federal preemption is March 21, 2005.

D. Executive Order 13175

This final rule was analyzed in accordance with the principles and criteria contained in Executive Order 13175 (''Consultation and Coordination with Indian Tribal Governments''). Because this final rule does not have tribal implications, does not impose substantial direct compliance costs, and is required by statute, the funding and consultation requirements of Executive Order 13175 do not apply.

E. Regulatory Flexibility Act, Executive Order 13272, and DOT Procedures and Policies

The Regulatory Flexibility Act (5 U.S.C. 601 *et seq.*) requires an agency to review regulations to assess their impact on small entities, unless the agency determines that a rule is not expected to have a significant impact on a substantial number of small entities. This final rule facilitates the transportation of hazardous materials in international commerce by providing consistency with international standards. This final rule applies to offerors and carriers of hazardous materials, some of whom are small entities, such as chemical users and suppliers, packaging manufacturers, distributors, battery manufacturers, and

training companies. As discussed above, under *Executive Order 12866*, the majority of amendments in this final rule should result in cost savings and ease the regulatory compliance burden for shippers engaged in domestic and international commerce, including trans-border shipments within North America.

Many companies will realize economic benefits as a result of these amendments. Additionally, the changes brought forth by this final rule will relive U.S. companies, including small entities competing in foreign markets, from the burden of complying with a dual system of regulations. Therefore, I certify that these amendments will not, if promulgated, have a significant economic impact on a substantial number of small entities.

This final rule has been developed in accordance with Executive Order 13272 (''Proper Consideration of Small Entities in Agency Rulemaking'') and DOT's procedures and policies to promote compliance with the Regulatory Flexibility Act to ensure that potential impacts of draft rules on small entities are properly considered.

F. Paperwork Reduction Act

Under the Paperwork Reduction Act of 1995, no person is required to respond to a collection of information unless it displays a valid Office of Management and Budget (OMB) control number. Section 1320.8(d), Title 5, Code of Federal Regulations requires that RSPA provide interested members of the public and affected agencies an opportunity to comment on information collection and recordkeeping requests. RSPA currently has two approved information collections affecting this final rule: OMB Control Number 2137–0557, ''Approvals for Hazardous Materials'' with 25,605 burden hours and $562,837.40 burden costs; and OMB Control Number 2137–0613, ''Subsidiary Hazard Class & Number/Type of Packagings'' with 63,309 burden hours and $216,705 burden costs.

There are minor editorial changes under this rule. However, there is no net increase in burden for OMB Control Number 2137–0557 or OMB Control Number 2137–0613. We estimate that the total information collection and recordkeeping burden as follows:

''Approvals for Hazardous Materials''

OMB Number 2137–0557:

Total Annual Number of Respondents: 3,523.

Total Annual Responses: 3,874.8.

Total Annual Burden Hours: 25,605.

Total Annual Burden Cost: $562,837.40.

''Subsidiary Hazard Class & Number/Type of Packagings''

OMB Number 2137–0613:

Total Annual Number of Respondents: 250,000.

Total Annual Responses: 6,337,500.

Total Annual Burden Hours: 17,604.

Total Annual Burden Cost: $216,705.

Total First Year Burden Hours: 45,705.

Total First Year Burden Cost: $1,115,992.

Requests for a copy of this information collection should be directed to Deborah Boothe or T. Glenn Foster, Office of Hazardous Materials Standards (DHM–10), Research and Special Programs Administration, Room 8422, 400 Seventh Street, SW., Washington, DC 20590–0001, telephone (202) 366–8553.

G. Regulatory Identifier Number (RIN)

A regulation identifier number (RIN) is assigned to each regulatory action listed in the Unified Agenda of Federal Regulations. The Regulatory Information Service Center publishes the Unified Agenda in April and October of each year. The RIN contained in the heading of this document can be used to cross-reference this action with the Unified Agenda.

H. Unfunded Mandates Reform Act

This final rule does not impose unfunded mandates under the Unfunded Mandates Reform Act of 1995. It does not result in costs of $120.7 million or more to either State, local or tribal governments, in the aggregate, or to the private sector, and is the least burdensome alternative that achieves the objective of the rule.

I. Environmental Assessment

The National Environmental Policy Act of 1969 (NEPA) requires Federal agencies to consider the consequences of major Federal actions and prepare a detailed statement on actions significantly affecting the quality of the human environment. We developed an assessment to determine the effects of these revisions on the environment and whether a more comprehensive environmental impact statement may be required. Our findings conclude that there are no significant environmental impacts associated with this final rule. Consistency in the regulations for the transportation of hazardous materials aids in the shipper's understanding of what is required and permits shippers to more easily comply with safety regulations and avoid the potential for environmental damage or contamination. For interested parties, an environmental assessment is available in the public docket.

J. Privacy Act

Anyone is able to search the electronic form of any written communications and comments received into any of our dockets by the name of the individual submitting the document (or signing the document, if submitted on behalf of an association, business, labor union, etc.). You may review DOT's complete Privacy Act Statement in the **Federal Register** published on April 11, 2000 (Volume 65, Number 70; Pages 19477–78) or you may visit *http://dms.dot.gov.*

List of Subjects

49 CFR Part 171

Exports, Hazardous materials transportation, Hazardous waste, Imports, Incorporation by reference, Reporting and recordkeeping requirements.

49 CFR Part 172

Education, Hazardous materials transportation, Hazardous waste, Incorporation by reference, Labeling, Markings, Packaging and containers, Reporting and recordkeeping requirements.

49 CFR Part 173

Hazardous materials transportation, Incorporation by reference, Packaging and containers, Radioactive materials, Reporting and recordkeeping requirements, Uranium.

49 CFR Part 175

Air carriers, Hazardous materials transportation, Incorporation by reference, Radioactive materials, Reporting and recordkeeping requirements.

49 CFR Part 176

Hazardous materials transportation, Incorporation by reference, Maritime carriers, Radioactive materials, Reporting and recordkeeping requirements.

49 CFR Part 178

Hazardous materials transportation, Incorporation by reference, Motor vehicle safety, Packaging and containers, Reporting and recordkeeping requirements.

49 CFR Part 180

Hazardous materials transportation, Motor carriers, Motor vehicle safety, Packaging and containers, Railroad safety, Reporting and recordkeeping requirements.

■ In consideration of the foregoing, 49 CFR Chapter I is amended as follows:

PART 171—GENERAL INFORMATION, REGULATIONS, AND DEFINITIONS

■ 1. The authority citation for part 171 continues to read as follows:

Authority: 49 U.S.C. 5101–5127, 44701; 49 CFR 1.45 and 1.53; Pub. L. 101–410 section 4 (28 U.S.C. 2461 note); Pub. L. 104–134 section 31001.

■ 2. In § 171.7, in the paragraph (a)(3) table, the following changes are made:

■ a. Under the entry ''International Civil Aviation Organization (ICAO),'' the existing entry is revised;

■ b. Under the entry ''International Maritime Organization (IMO),'' the entry ''International Maritime Dangerous Goods (IMDG) Code, 2002 Consolidated Edition, as amended by Amendment 31 (English edition)'' is removed and one entry is added in its place;

■ c. Under the entry ''United Nations,'' the entry ''UN Recommendations on the Transport of Dangerous Goods, Twelfth Revised Edition (2001)'' is revised;

■ d. Under the entry ''United Nations,'' the entry ''UN Recommendations on the Transport of Dangerous Goods, Manual of Tests and Criteria, Third Revised Edition (1999)'' is revised; and

■ e. In paragraph (b), a new entry ''American Institute of Chemical Engineers (AIChE),'' 3 Park Avenue New York, NY 10016–5991, Process Safety Progress Journal, Vol. 21, No. 2, ''Example of a Test Method for Venting Sizing: OPPSD/SPI Methodology'' is added in alphabetical order.

The revisions and additions read as follows:

§ 171.7 Reference material.

(a) * * *

(3) *Table of material incorporated by reference.* * * *

Source and name of material	49 CFR reference
* * * * * *	*
International Civil Aviation Organization (ICAO),	
* * * * * *	*
Technical Instructions for the Safe Transport of Dangerous Goods by Air (ICAO Technical Instructions), 2005–2006 Edition	171.8; 171.11; 172.202; 172.401; 172.512; 172.602; 173.320; 175.33; 178.3.
International Maritime Organization (IMO),	
* * * * * *	*
International Maritime Dangerous Goods Code (IMDG Code), 2004 Edition, Incorporating Amendment 32–04 (English Edition), Volumes 1 and 2	171.12; 172.202; 172.401; 172.502; 172.602; 173.21; 176.2; 176.5; 176.11; 176.27; 176.30; 178.3.
* * * * * *	*
United Nations,	
* * * * * *	*
UN Recommendations on the Transport of Dangerous Goods, Thirteenth Revised Edition (2003), Volumes I and II	171.12; 172.202; 172.401; 172.502; 173.22; 173.24; 173.24b; 173.197; Part 173, appendix H; 178.274; 178.801.
UN Recommendations on the Transport of Dangerous Goods, Manual of Tests and Criteria, Fourth Revised Edition, (2003)	172.102; 173.21; 173.56; 173.57; 173.58; 173.115; 173.124; 173.125; 173.127; 173.128; 173.185.
* * * * * *	*

(b) *List of informational materials not requiring incorporation by reference.*
* * *

Source and name of material	49 CFR reference
* * * * * *	*
American Institute of Chemical Engineers (AIChE),	

Source and name of material	49 CFR reference
3 Park Avenue New York, NY 10016–5991 Process Safety Progress Journal, Vol. 21, No. 2 Example of a Test Method for Venting Sizing: OPPSD/SPI Methodology	Note to § 173.225(h)(3)(vi).
* * * * * * *	

■ 3. In § 171.8, the definition for ''Salvage packaging'' is revised to read as follows:

§ 171.8 Definitions and abbreviations.

* * * * *

Salvage packaging means a special packaging conforming to § 173.3 of this subchapter into which damaged, defective, leaking, or non-conforming hazardous materials packages, or hazardous materials that have spilled or leaked, are placed for purposes of transport for recovery or disposal.

* * * * *

■ 4. In § 171.11, paragraphs (d)(15) and (d)(17) are revised to read as follows:

§ 171.11 Use of ICAO Technical Instructions.

* * * * *

(d) * * *

(15) A chemical oxygen generator, including when fitted in protective breathing equipment or other apparatus, is forbidden for transportation aboard a passenger-carrying aircraft and must be approved, classed, described and packaged in accordance with the requirements of this subchapter for transportation on cargo-only aircraft. A chemical oxygen generator that has been used or spent is also forbidden for transportation on a passenger aircraft and cargo aircraft only.

* * * * *

(17) A self-reactive substance that is not identified by technical name in the Self-reactive Materials Table in § 173.224(b) of this subchapter must be approved by the Associate Administrator in accordance with the requirements of § 173.124(a)(2)(iii) of this subchapter. An organic peroxide that is not identified by a technical name in any of the organic peroxide tables found in § 173.225 of this subchapter must be approved by the Associate Administrator in accordance with the requirements of § 173.128(d) of this subchapter.

■ 5. In § 171.12, paragraph (b)(20) is revised to read as follows:

§ 171.12 Import and export shipments.

* * * * *

(b) * * *

(20) A self-reactive substance that is not identified by technical name in the Self-Reactive Materials Table in § 173.224(b) of this subchapter must be approved by the Associate Administrator in accordance with the requirements of § 173.124(a)(2)(iii) of this subchapter. An organic peroxide that is not identified by a technical name in any of the organic peroxide tables found in § 173.225 of this subchapter must be approved by the Associate Administrator in accordance with the requirements of § 173.128(d) of this subchapter.

* * * * *

■ 6. In § 171.12a, paragraphs (a), (b)(9), and (b)(18) are revised to read as follows:

§ 171.12a Canadian shipments and packagings.

(a) *Scope and applicability.* This section sets forth provisions for the transportation by rail or highway of shipments of hazardous materials which conform to the regulations of the Government of Canada but which may differ from the requirements of this subchapter with regard to hazard communication, classification or packaging. Except as provided in paragraph (b)(5)(iv) of this section, the provisions apply only to shipments which originate in Canada and either terminate in the U.S. or transit the U.S. to a Canadian or foreign destination, and to the return to Canada of bulk packagings that meet the requirements of a DOT or UN Specification and other bulk packagings containing only residues of hazardous materials that were originally imported into the U.S. Reciprocal provisions, applicable to exports from the U.S., appear in the regulations of the Government of Canada.

(b) * * *

(9) For hazardous waste as defined in this subchapter—

(i) The word ''Waste'' must precede the proper shipping name on shipping papers and packages; and

(ii) The requirements of § 172.204 of this subchapter with respect to the shipper's certification and § 172.205 of this subchapter with respect to hazardous waste manifests are applicable;

* * * * *

(18) A self-reactive substance that is not identified by technical name in the Self-reactive Materials Table in § 173.224(b) of this subchapter must be approved by the Associate Administrator in accordance with the requirements of § 173.124(a)(2)(iii) of this subchapter. An organic peroxide that is not identified by a technical name in any of the organic peroxide tables found in § 173.225 of this subchapter must be approved by the Associate Administrator in accordance with the requirements of § 173.128(d) of this subchapter.

* * * * *

■ 7. In § 171.14, paragraphs (d) introductory text, (d)(1), and (d)(2) are revised to read as follows:

§ 171.14 Transitional provisions for implementing certain requirements.

* * * * *

(d) A final rule published in the **Federal Register** on December 20, 2004, effective January 1, 2005, resulted in revisions to this subchapter. During the transition period, until January 1, 2006, as provided in paragraph (d)(1) of this section, a person may elect to comply with either the applicable requirements of this subchapter in effect on December 31, 2004, or the requirements published in the December 20, 2004, final rule.

(1) *Transition dates.* The effective date of the final rule published on December 20, 2004, is January 1, 2005. A delayed compliance date of January 1, 2006 is authorized. On and after January 1, 2006, all applicable regulatory requirements adopted in the final rule in effect on January 1, 2005 must be met.

(2) *Intermixing old and new requirements.* Marking, labeling, placarding, and shipping paper descriptions must conform to either the old requirements of this subchapter in effect on December 31, 2004, or the new requirements of this subchapter in the final rule without intermixing communication elements, except that intermixing is permitted, during the applicable transition period, for packaging, hazard communication, and handling provisions, as follows:

* * * * *

PART 172—HAZARDOUS MATERIALS TABLE, SPECIAL PROVISIONS, HAZARDOUS MATERIALS COMMUNICATIONS, EMERGENCY RESPONSE INFORMATION, AND TRAINING REQUIREMENTS

■ 8. The authority citation for part 172 continues to read as follows:

Authority: 49 U.S.C. 5101–5127; 49 CFR 1.53.

■ 9. In § 172.101, the following amendments are made:
■ a. Paragraph (c)(11) is revised;
■ b. Paragraph (d)(4) is revised;
■ c. Paragraph (i)(3) is revised;
■ d. Hazardous Materials Table is revised as set forth below:

§ 172.101 Purpose and use of hazardous materials table.

* * * * *

(c) * * *

(11) Except for a material subject to or prohibited by § 173.21, 173.54, 173.56(d), 173.56(e), 173.224(c) or 173.225(b) of this subchapter, a material that is considered to be a hazardous waste or a sample of a material for which the hazard class is uncertain and must be determined by testing may be assigned a tentative proper shipping name, hazard class, identification number and packing group, if applicable, based on the shipper's tentative determination according to:

(i) Defining criteria in this subchapter;

(ii) The hazard precedence prescribed in § 173.2a of this subchapter;

(iii) The shipper's knowledge of the material;

(iv) In addition to paragraphs (c)(11)(i) through (iii) of this section, for a sample of a material other than a waste, the following must be met:

(A) Except when the word ''Sample'' already appears in the proper shipping name, the word ''Sample'' must appear as part of the proper shipping name or in association with the basic description on the shipping paper.

(B) When the proper shipping description for a sample is assigned a ''G'' in Column (1) of the § 172.101 Table, and the primary constituent(s) for which the tentative classification is based are not known, the provisions requiring a technical name for the constituent(s) do not apply; and

(C) A sample must be transported in a combination packaging that conforms to the requirements of this subchapter that are applicable to the tentative packing group assigned, and may not exceed a net mass of 2.5 kg (5.5 pounds) per package.

Note to Paragraph (c)(11): For the transportation of self-reactive, organic peroxide and explosive samples, see §§ 173.224(c)(3), 173.225(b)(2) and 173.56(d) of this subchapter, respectively.

* * * * *

(d) * * *

(4) When an entry in this column reads ''Comb liq'', the material is assigned to the hazard class ''Combustible liquid.'' Additionally, each reference to a Class 3 material is modified to read ''Combustible liquid'' when that material is reclassified in accordance with § 173.150 (e) or (f) of this subchapter or has a flash point above 60.5 °C (141 °F) but below 93 °C (200 °F).

* * * * *

(i) * * *

(3) *Bulk packaging.* Column 8C specifies the section in part 173 of this subchapter that prescribes packaging requirements for bulk packagings, subject to the limitations, requirements and additional authorizations of Column 7. A ''None'' in this column means bulk packagings are not authorized, except as may be provided by special provisions in Column 7. Additional authorizations and limitations for use of UN portable tanks are set forth in Column 7. For each reference in this column to a material that is a hazardous waste or a hazardous substance, and whose proper shipping name is preceded in Column 1 of the Table by the letter ''A'' or ''W'' and that is offered for transportation or transported by a mode in which its transportation is not otherwise subject to the requirements of this subchapter:

* * * * *

BILLING CODE 4910–60–P

§ 172.101 HAZARDOUS MATERIALS TABLE

Symbols	Hazardous materials descriptions and proper shipping names	Hazard class or Division	Identification Numbers	PG	Label Codes	Special provisions (§172.102)	(8) Packaging (§173.***)			(9) Quantity limitations		(10) Vessel stowage	
							Exceptions	Non-bulk	Bulk	Passenger aircraft/rail	Cargo aircraft only	Location	Other
(1)	(2)	(3)	(4)	(5)	(6)	(7)	(8A)	(8B)	(8C)	(9A)	(9B)	(10A)	(10B)
	Accellerene, see p-Nitrosodimethylaniline												
	Accumulators, electric, see Batteries, wet *etc*												
	Accumulators, pressurized, pneumatic or hydraulic (containing non-flamable gas), see Articles pressurized, pneumatic *or* hydraulic (containing non-flamable gas).												
	Acetal	3	UN1088	II	3	IB2, T4, TP1	150	202	242	5 L	60 L	E	
	Acetaldehyde	3	UN1089	I	3	A3, B16, T11, TP2, TP7	None	201	243	Forbidden	30 L	E	
A	Acetaldehyde ammonia	9	UN1841	III	9	IB8, IP3, IP7, T1, TP33	155	204	240	200 kg	200 kg	A	34
	Acetaldehyde oxime	3	UN2332	III	3	B1, IB3, T4, TP1	150	203	242	60 L	220 L	A	
	Acetic acid, glacial *or* Acetic acid solution, *with more than 80 percent acid, by mass*	8	UN2789	II	8, 3	A3, A6, A7, A10, B2, IB2, T7, TP2	154	202	243	1 L	30 L	A	
	Acetic acid solution, *not less than 50 percent but not more than 80 percent acid, by mass*	8	UN2790	II	8	A3, A6, A7, A10, B2, IB2, T7, TP2	154	202	242	1 L	30 L	A	
	Acetic acid solution, *with more than 10 percent and less than 50 percent acid, by mass*	8	UN2790	III	8	IB3, T4, TP1	154	203	242	5 L	60 L	A	
	Acetic anhydride	8	UN1715	II	8, 3	A3, A6, A7, A10, B2, IB2, T7, TP2	154	202	243	1 L	30 L	A	40
	Acetone	3	UN1090	II	3	IB2, T4, TP1	150	202	242	5 L	60 L	B	
	Acetone cyanohydrin, stabilized	6.1	UN1541	I	6.1	2, B9, B14, B32, B76, B77, N34, T20, TP2, TP13, TP38, TP45	None	227	244	Forbidden	Forbidden	D	25, 40, 52, 53
	Acetone oils	3	UN1091	II	3	IB2, T4, TP1, TP8	150	202	242	5 L	60 L	B	
	Acetonitrile	3	UN1648	II	3	IB2, T7, TP2	150	202	242	5 L	60 L	B	40
	Acetyl acetone peroxide with more than 9 percent by mass active oxygen	Forbidden											
	Acetyl benzoyl peroxide, solid, or with more than 40 percent in solution	Forbidden											
	Acetyl bromide	8	UN1716	II	8	B2, IB2, T8, TP2, TP12	154	202	242	1 L	30 L	C	40
	Acetyl chloride	3	UN1717	II	3, 8	A3, A6, A7, IB1, N34, T8, TP2, TP12	150	202	243	1 L	5 L	B	40
	Acetyl cyclohexanesulfonyl peroxide, with more than 82 percent wetted with less than 12 percent water.	Forbidden											
	Acetyl iodide	8	UN1898	II	8	B2, IB2, T7, TP2, TP13	154	202	242	1 L	30 L	C	40
	Acetyl methyl carbinol	3	UN2621	III	3	B1, IB3, T2, TP1	150	203	242	60 L	220 L	A	
	Acetyl peroxide, solid, or with more than 25 percent in solution	Forbidden											
	Acetylene, dissolved	2.1	UN1001		2.1		None	303	None	Forbidden	15 kg	D	25, 40, 57
	Acetylene (liquefied)	Forbidden											
	Acetylene silver nitrate	Forbidden											
	Acetylene tetrabromide, see Tetrabromoethane												
	Acid butyl phosphate, see Butyl acid phosphate												
	Acid, sludge, *see* Sludge acid												
	Acridine	6.1	UN2713	III	6.1	IB8, IP3, T1, TP33	153	213	240	100 kg	200 kg	A	
	Acrolein dimer, stabilized	3	UN2607	III	3	B1, IB3, T2, TP1	150	203	242	60 L	220 L	A	40
	Acrolein, stabilized	6.1	UN1092	I	6.1, 3	1, B9, B14, B30, B42, B72, B77, T22, TP2, TP7, TP13, TP38, TP44	None	226	244	Forbidden	Forbidden	D	40
	Acrylamide, solid	6.1	UN2074	III	6.1	IB8, IP3, T1, TP33	153	213	240	100 kg	200 kg	A	12
	Acrylamide solution	6.1	UN3426	III	6.1	IB3, T4, TP1	153	203	241	60 L	220 L	A	12
	Acrylic acid, stabilized	8	UN2218	II	8, 3	B2, IB2, T7, TP2	154	202	243	1 L	30 L	C	25, 40
	Acrylonitrile, stabilized	3	UN1093	I	3, 6.1	B9, T14, TP2, TP13	None	201	243	Forbidden	30 L	E	40
	Actuating cartridge, explosive, see Cartridges, power device												
	Adhesives, *containing a flammable liquid*	3	UN1133	I	3	B42, T11, TP1, TP8, TP27	150	201	143	1 L	30 L	B	
				II	3	149, B52, IB2, T4, TP1, TP8	150	173	242	5 L	60 L	B	

	.....	.....		III	3	B1, B52, IB3, T2, TP1	150	173	242	60 L	220 L	A	.....
	Adiponitrile	6.1	UN2205	III	6.1	IB3, T3, TP1	153	203	241	60 L	220 L	A	.....
	Aerosols, *corrosive, Packing Group II or III, (each not exceeding 1 L capacity)*	2.2	UN1950	.....	2.2, 8	153, A34	306	None	None	75 kg	150 kg	A	48, 87, 126
	Aerosols, *flammable, (each not exceeding 1 L capacity)*	2.1	UN1950	.....	2.1	153, N82	306	None	None	75 kg	150 kg	A	48, 87, 126
	Aerosols, flammable, n.o.s. (*engine starting fluid) (each not exceeding 1 L capacity)*	2.1	UN1950	.....	2.1	153, N82	306	304	None	Forbidden	150 kg	A	48, 87, 126
	Aerosols, *non-flammable, (each not exceeding 1 L capacity)*	2.2	UN1950	.....	2.2	153	306	None	None	75 kg	150 kg	A	48, 87, 126
	Aerosols, *poison, each not exceeding 1 L capacity*	2.2	UN1950	.....	2.2, 6.1.	153	306	None	None	Forbidden	Forbidden	A	48, 87, 126
I	Air bag inflators, *or* Air bag modules, *or* Seat-belt pretensioners.	1.4G	UN0503	II	1.4G ..	161	None	62	None	Forbidden	75 kg	02	.....
	Air bag inflators, *or* Air bag modules, *or* Seat-belt pretensioners.	9	UN3268	III	9	160	166	166	166	25 kg	100 kg	A	.....
	Air, compressed	2.2	UN1002	.....	2.2	78	306	302	302	75 kg	150 kg	A	.....
	Air, refrigerated liquid, *(cryogenic liquid)*	2.2	UN1003	.....	2.2, 5.1.	T75, TP5, TP22	320	316	318, 319.	Forbidden	150 kg	D	51
	Air, refrigerated liquid, *(cryogenic liquid) non-pressurized*	2.2	UN1003	.....	2.2, 5.1.	T75, TP5, TP22	320	316	318, 319.	Forbidden	Forbidden	D	51
	Aircraft engines (including turbines), see Engines, internal combustion	.....			.....		.....	.....	.....	.....	.....		.....
	Aircraft evacuation slides, see Life saving appliances *etc*	.....			.....		.....	.....	.....	.....	.....		.....
	Aircraft hydraulic power unit fuel tank *(containing a mixture of anhydrous hydrazine and monomethyl hydrazine) (M86 fuel).*	3	UN3165	I	3, 6.1, 8.		None	172	None	Forbidden	42 L	E	.....
	Aircraft survival kits, see Life saving appliances *etc*	.....			.....		.....	.....	.....	.....	.....		.....
G	Alcoholates solution, n.o.s., *in alcohol*	3	UN3274	II	3, 8	IB2	150	202	243	1 L	5 L	B	.....
	Alcoholic beverages	3	UN3065	II	3	24, 149, B1, IB2, T4, TP1	150	202	242	5 L	60 L	A	.....
	.....	.....		III	3	24, B1, IB3, N11, T2, TP1	150	203	242	60 L	220 L	A	.....
	Alcohols, n.o.s.	3	UN1987	I	3	T11, TP1, TP8, TP27	None	201	243	1 L	30 L	E	.....
	.....	.....		II	3	IB2, T7, TP1, TP8, TP28	150	202	242	5 L	60 L	B	.....
	.....	.....		III	3	B1, IB3, T4, TP1, TP29	150	203	242	60 L	220 L	A	.....
G	Alcohols, flammable, toxic, n.o.s.	3	UN1986	I	3, 6.1	T14, TP2, TP13, TP27	None	201	243	Forbidden	30 L	E	40
	.....	.....		II	3, 6.1	IB2, T11, TP2, TP27	150	202	243	1 L	60 L	B	40
	.....	.....		III	3, 6.1	B1, IB3, T7, TP1, TP28	None	203	242	60 L	220 L	A	.....
	Aldehydes, n.o.s.	3	UN1989	I	3	T11, TP1, TP27	None	201	243	1 L	30 L	E	.....
	.....	.....		II	3	IB2, T7, TP1, TP8, TP28	150	202	242	5 L	60 L	B	.....
	.....	.....		III	3	B1, IB3, T4, TP1, TP29	150	203	242	60 L	220 L	A	.....
G	Aldehydes, flammable, toxic, n.o.s.	3	UN1988	I	3, 6.1	T14, TP2, TP13, TP27	None	201	243	Forbidden	30 L	E	40
	.....	.....		II	3, 6.1	IB2, T11, TP2, TP27	150	202	243	1 L	60 L	B	40
	.....	.....		III	3, 6.1	B1, IB3, T7, TP1, TP28	150	203	242	60 L	220 L	A	.....
	Aldol	6.1	UN2839	II	6.1	IB2, T7, TP2	153	202	243	5 L	60 L	A	12
G	Alkali metal alcoholates, self-heating, corrosive, n.o.s.	4.2	UN3206	II	4.2, 8	64, A7, IB5, IP2, T3, TP33	None	212	242	15 kg	50 kg	B	.....
	.....	.....		III	4.2, 8	64, A7, IB8, IP3, T1, TP33	None	213	242	25 kg	100 kg	B	.....
	Alkali metal alloys, liquid, n.o.s.	4.3	UN1421	I	4.3	A2, A3, A7, B48, N34	None	201	244	Forbidden	1 L	D	52
	Alkali metal amalgam, liquid	4.3	UN1389	I	4.3	A2, A3, A7, N34	None	201	244	Forbidden	1 L	D	40, 52
	Alkali metal amalgam, solid	4.3	UN3401	I	4.3	IB4, IP1, N40, T9, TP7, TP33	None	211	242	Forbidden	15 kg	D	52
	Alkali metal amides	4.3	UN1390	II	4.3	A6, A7, A8, A19, A20, IB7, IP2, T3, TP33	151	212	241	15 kg	50 kg	E	40, 52
	Alkali metal dispersions, *or* Alkaline earth metal dispersions	4.3	UN1391	I	4.3	A2, A3, A7	None	201	244	Forbidden	1 L	D	52
	Alkaline corrosive liquids, n.o.s., see Caustic alkali liquids, n.o.s.	.....			.....		.....	.....	.....	.....	.....		.....
G	Alkaline earth metal alcoholates, n.o.s.	4.2	UN3205	II	4.2	65, A7, IB6, IP2, T3, TP33	None	212	241	15 kg	50 kg	B	.....
	.....	.....		III	4.2	65, A7, IB8, IP3, T1, TP33	None	213	241	25 kg	100 kg	B	.....
	Alkaline earth metal alloys, n.o.s.	4.3	UN1393	II	4.3	A19, IB7, IP2, T3, TP33	151	212	241	15 kg	50 kg	E	52
	Alkaline earth metal amalgams, liquid	4.3	UN1392	I	4.3	A19, N34, N40	None	201	244	Forbidden	1 L	E	40, 52

§ 172.101 HAZARDOUS MATERIALS TABLE—Continued

Symbols	Hazardous materials descriptions and proper shipping names	Hazard class or Division	Identification Numbers	PG	Label Codes	Special provisions (§172.102)	(8) Packaging (§173.***)			(9) Quantity limitations		(10) Vessel stowage	
							Exceptions	Non-bulk	Bulk	Passenger aircraft/rail	Cargo aircraft only	Location	Other
(1)	(2)	(3)	(4)	(5)	(6)	(7)	(8A)	(8B)	(8C)	(9A)	(9B)	(10A)	(10B)
	Alkaline earth metal amalgams, solid	4.3	UN3402	I	4.3	A19, N34, N40, T9, TP7, TP33	None	211	242	Forbidden	15 kg	D	52
G	Alkaloids, liquid, n.o.s., *or* Alkaloid salts, liquid, n.o.s.	6.1	UN3140	I	6.1	A4, T14, TP2, TP27	None	201	243	1 L	30 L	A	
				II	6.1	IB2, T11, TP2, TP27	153	202	243	5 L	60 L	A	
				III	6.1	IB3, T7, TP1, TP28	153	203	241	60 L	220 L	A	
G	Alkaloids, solid, n.o.s. [or] Alkaloid salts, solid, n.o.s. [poisonous]	6.1	UN1544	I	6.1	IB7, IP1, T6, TP33	None	211	242	5 kg	50 kg	A	
				II	6.1	IB8, IP2, IP4, T3, TP33	153	212	242	25 kg	100 kg	A	
				III	6.1	IB8, IP3, T1, TP33	153	213	240	100 kg	200 kg	A	
	Alkyl sulfonic acids, liquid *or* Aryl sulfonic acids, liquid *with more than 5 percent free sulfuric acid.*	8	UN2584	II	8	B2, IB2, T8, TP2, TP12, TP13	154	202	242	1 L	30 L	B	
	Alkyl sulfonic acids, liquid *or* Aryl sulfonic acids, liquid *with not more than 5 percent free sulfuric acid.*	8	UN2586	III	8	IB3, T4, TP1	154	203	241	5 L	60 L	B	
	Alkyl sulfonic acids, solid *or* Aryl sulfonic acids, solid, *with more than 5 percent free sulfuric acid.*	8	UN2583	II	8	IB8, IP2, IP4, T3, TP33	154	212	240	15 kg	50 kg	A	
	Alkyl sulfonic acids, solid *or* Aryl sulfonic acids, solid *with not more than 5 percent free sulfuric acid.*	8	UN2585	III	8	IB8, IP3, T1, TP33	154	213	240	25 kg	100 kg	A	
	Alkylphenols, liquid, n.o.s. *(including C2-C12 homologues)*	8	UN3145	I	8	A6, T14, TP2	None	201	243	0.5 L	2.5 L	B	
				II	8	IB2, T11, TP2, TP27	154	202	242	1 L	30 L	B	
				III	8	IB3, T7, TP1, TP28	154	203	241	5 L	60 L	A	
	Alkylphenols, solid, n.o.s. *(including C2-C12 homologues)*	8	UN2430	I	8	IB7, IP1, T6, TP33	None	211	242	1 kg	25 kg	B	
				II	8	IB8, IP2, IP4, T3, TP33	154	212	240	15 kg	50 kg	B	
				III	8	IB8, IP3, T1, TP33	154	213	240	25 kg	100 kg	A	
	Alkylsulfuric acids	8	UN2571	II	8	B2, IB2, T8, TP2, TP12, TP13, TP28	154	202	242	1 L	30 L	C	14
	Allethrin, see Pesticides, liquid, toxic, n.o.s.												
	Allyl acetate	3	UN2333	II	3, 6.1	IB2, T7, TP1, TP13	150	202	243	1 L	60 L	E	40
	Allyl alcohol	6.1	UN1098	I	6.1, 3	2, B9, B14, B32, B74, B77, T20, TP2, TP13, TP38, TP45	None	227	244	Forbidden	Forbidden	D	40
	Allyl bromide	3	UN1099	I	3, 6.1	T14, TP2, TP13	None	201	243	Forbidden	30 L	B	40
	Allyl chloride	3	UN1100	I	3, 6.1	T14, TP2, TP13	None	201	243	Forbidden	30 L	E	40
	Allyl chlorocarbonate, see Allyl chloroformate												
	Allyl chloroformate	6.1	UN1722	I	6.1, 3, 8.	2, B9, B14, B32, B74, N41, T20, TP2, TP13, TP38, TP45	None	227	244	Forbidden	Forbidden	D	40
	Allyl ethyl ether	3	UN2335	II	3, 6.1	IB2, T7, TP1, TP13	150	202	243	1 L	60 L	E	40
	Allyl formate	3	UN2336	I	3, 6.1	T14, TP2, TP13	None	201	243	Forbidden	30 L	E	40
	Allyl glycidyl ether	3	UN2219	III	3	B1, IB3, T2, TP1	150	203	242	60 L	220 L	A	
	Allyl iodide	3	UN1723	II	3, 8	A3, A6, IB1, N34, T7, TP2, TP13	150	202	243	1 L	5 L	B	40
	Allyl isothiocyanate, stabilized	6.1	UN1545	II	6.1, 3	A3, A7, IB2, T7, TP2	None	202	243	Forbidden	60 L	D	40
	Allylamine	6.1	UN2334	I	6.1, 3	2, B9, B14, B32, B74, T20, TP2, TP13, TP38, TP45	None	227	244	Forbidden	Forbidden	D	40

	Allyltrichlorosilane, stabilized	8	UN1724	II	8, 3	A7, B2, B6, IB2, N34, T7, TP2, TP13	None	202	243	Forbidden	30 L	C	40
	Aluminum alkyl halides, liquid	4.2	UN3052	I	4.2, 4.3.	B9, B11, T21, TP2, TP7	None	181	244	Forbidden	Forbidden	D	134
	Aluminium alkyl halides, solid	4.2	UN3461	I	4.2, 4.3.	T21, TP7, TP33	None	181	244	Forbidden	Forbidden	D	134
	Aluminum alkyl hydrides	4.2	UN3076	I	4.2, 4.3.	B9, B11, T21, TP2, TP7	None	181	244	Forbidden	Forbidden	D	.....
	Aluminum alkyls	4.2	UN3051	I	4.2, 4.3.	B9, B11, T21, TP2, TP7	None	181	244	Forbidden	Forbidden	D	.....
	Aluminum borohydride *or* Aluminum borohydride in devices	4.2	UN2870	I	4.2, 4.3.	B11, T21, TP7, TP33	None	181	244	Forbidden	Forbidden	D	.....
	Aluminum bromide, anhydrous	8	UN1725	II	8	IB8, IP2, IP4, T3, TP33	154	212	240	15 kg	50 kg	A	40
	Aluminum bromide, solution	8	UN2580	III	8	IB3, T4, TP1	154	203	241	5 L	60 L	A	.....
	Aluminum carbide	4.3	UN1394	II	4.3	A20, IB7, IP2, N41, T3, TP33	151	212	242	15 kg	50 kg	A	52
	Aluminum chloride, anhydrous	8	UN1726	II	8	IB8, IP2, IP4, T3, TP33	154	212	240	15 kg	50 kg	A	40
	Aluminum chloride, solution	8	UN2581	III	8	IB3, T4, TP1	154	203	241	5 L	60 L	A	.....
	Aluminum dross, wet or hot	Forbidden			.....		.....	.....	.....	.....	.....		.....
	Aluminum ferrosilicon powder	4.3	UN1395	II	4.3, 6.1.	A19, IB5, IP2, T3, TP33	151	212	242	15 kg	50 kg	A	39, 40, 52, 53, 85, 103
	.....	.....		III	4.3, 6.1.	A19, A20, IB4	151	213	241	25 kg	100 kg	A	39, 40, 52, 53, 85, 103
	Aluminum hydride	4.3	UN2463	I	4.3	A19, N40	None	211	242	Forbidden	15 kg	E	.....
D	Aluminum, molten	9	NA9260	III	9	IB3, T1, TP3	None	None	247	Forbidden	Forbidden	D	.....
	Aluminum nitrate	5.1	UN1438	III	5.1	A1, A29, IB8, IP3, T1, TP33	152	213	240	25 kg	100 kg	A	.....
	Aluminum phosphate solution, see Corrosive liquids, *etc*	.....			.....		.....	.....	.....	.....	.....		.....
	Aluminum phosphide	4.3	UN1397	I	4.3, 6.1.	A8, A19, N40	None	211	242	Forbidden	15 kg	E	40, 52, 85
	Aluminum phosphide pesticides	6.1	UN3048	I	6.1	A8, IB7, IP1, T6, TP33	None	211	242	Forbidden	15 kg	E	40, 85
	Aluminum powder, coated	4.1	UN1309	II	4.1	IB8, IP2, IP4, T3, TP33	151	212	240	15 kg	50 kg	A	13, 39, 52, 53, 74, 101
	.....	.....		III	4.1	IB8, IP3, T1, TP33	151	213	240	25 kg	100 kg	A	13, 39, 52, 53, 74, 101
	Aluminum powder, uncoated	4.3	UN1396	II	4.3	A19, A20, IB7, IP2, T3, TP33	151	212	242	15 kg	50 kg	A	39, 52, 53
	.....	.....		III	4.3	A19, A20, IB8, IP4, T1, TP33	151	213	241	25 kg	100 kg	A	39, 52, 53
	Aluminum resinate	4.1	UN2715	III	4.1	IB6, T1, TP33	151	213	240	25 kg	100 kg	A	.....
	Aluminum silicon powder, uncoated	4.3	UN1398	III	4.3	A1, A19, IB8, IP4, T1, TP33	151	213	241	25 kg	100 kg	A	39, 40, 52, 53, 85, 103
	Aluminum smelting by-products *or* Aluminum remelting by-products	4.3	UN3170	II	4.3	128, B115, IB7, IP2, T3, TP33	None	212	242	15 kg	50 kg	B	85, 103
	.....	.....		III	4.3	128, B115, IB8, IP4, T1, TP33	None	213	241	25 kg	100 kg	B	85, 103
	Amatols, see Explosives, blasting, type B	.....			.....		.....	.....	.....	.....	.....		.....
G	Amines, flammable, corrosive, n.o.s. *or* Polyamines, flammable, corrosive, n.o.s.	3	UN2733	I	3, 8	T14, TP1, TP27	None	201	243	0.5 L	2.5 L	D	40
	.....	.....		II	3, 8	IB2, T11, TP1, TP27	150	202	243	1 L	5 L	B	40
	.....	.....		III	3, 8	B1, IB3, T7, TP1, TP28	150	203	242	5 L	60 L	A	40
G	Amines, liquid, corrosive, flammable, n.o.s. *or* Polyamines, liquid, corrosive, flammable, n.o.s.	8	UN2734	I	8, 3	A3, A6, N34, T14, TP2, TP27	None	201	243	0.5 L	2.5 L	A	52
	.....	.....		II	8, 3	IB2, T11, TP2, TP27	None	202	243	1 L	30 L	A	52
G	Amines, liquid, corrosive, n.o.s., *or* Polyamines, liquid, corrosive, n.o.s.	8	UN2735	I	8	A3, A6, B10, N34, T14, TP2, TP27	None	201	243	0.5 L	2.5 L	A	52
	.....	.....		II	8	B2, IB2, T11, TP1, TP27	154	202	242	1 L	30 L	A	52
	.....	.....		III	8	IB3, T7, TP1, TP28	154	203	241	5 L	60 L	A	52
G	Amines, solid, corrosive, n.o.s., *or* Polyamines, solid, corrosive n.o.s.	8	UN3259	I	8	IB7, IP1, T6, TP33	None	211	242	1 kg	25 kg	A	52

§ 172.101 HAZARDOUS MATERIALS TABLE—Continued

Symbols	Hazardous materials descriptions and proper shipping names	Hazard class or Division	Identification Numbers	PG	Label Codes	Special provisions (§172.102)	(8) Packaging (§173.***)			(9) Quantity limitations		(10) Vessel stowage	
							Exceptions	Non-bulk	Bulk	Passenger aircraft/rail	Cargo aircraft only	Location	Other
(1)	(2)	(3)	(4)	(5)	(6)	(7)	(8A)	(8B)	(8C)	(9A)	(9B)	(10A)	(10B)
	.....	.....		II	8	IB8, IP2, IP4, T3, TP33	154	212	240	15 kg	50 kg	A	52
	.....	.....		III	8	IB8, IP3, T1, TP33	154	213	240	25 kg	100 kg	A	52
	2-Amino-4-chlorophenol	6.1	UN2673	II	6.1	IB8, IP2, IP4, T3, TP33	153	212	242	25 kg	100 kg	A	.....
	2-Amino-5-diethylaminopentane	6.1	UN2946	III	6.1	IB3, T4, TP1	153	203	241	60 L	220 L	A	.....
	2-Amino-4,6-Dinitrophenol, wetted *with not less than 20 percent water by mass*	4.1	UN3317	I	4.1	23, A8, A19, A20, N41	None	211	None	1 kg	15 kg	E	28, 36
	2-(2-Aminoethoxy) ethanol	8	UN3055	III	8	IB3, T4, TP1	154	203	241	5 L	60 L	A	.....
	N-Aminoethylpiperazine	8	UN2815	III	8	IB3, T4, TP1	154	203	241	5 L	60 L	A	12
+	Aminophenols (o-; m-; p-)	6.1	UN2512	III	6.1	IB8, IP3, T1, TP33	153	213	240	100 kg	200 kg	A	.....
	Aminopropyldiethanolamine, see Amines, *etc*	.....			.....		.....	.....	.....	.....	.....		.....
	n-Aminopropylmorpholine, see Amines, *etc*	.....			.....		.....	.....	.....	.....	.....		.....
	Aminopyridines *(o-; m-; p-)*	6.1	UN2671	II	6.1	IB8, IP2, IP4, T3, TP33	153	212	242	25 kg	100 kg	B	12, 40
I	Ammonia, anhydrous	2.3	UN1005	.....	2.3, 8	4, T50	None	304	314, 315.	Forbidden	Forbidden	D	40, 57
D	Ammonia, anhydrous	2.2	UN1005	.....	2.2	13, T50	None	304	314, 315.	Forbidden	Forbidden	D	40, 57
D	Ammonia solution, *relative density less than 0.880 at 15 degrees C in water, with more than 50 percent ammonia.*	2.2	UN3318	.....	2.2	13, T50	None	304	314, 315.	Forbidden	Forbidden	D	40, 57
I	Ammonia solution, *relative density less than 0.880 at 15 degrees C in water, with more than 50 percent ammonia.*	2.3	UN3318	.....	2.3, 8	4, T50	None	304	314, 315.	Forbidden	Forbidden	D	40, 57
	Ammonia solutions, *relative density between 0.880 and 0.957 at 15 degrees C in water, with more than 10 percent but not more than 35 percent ammonia.*	8	UN2672	III	8	IB3, IP8, T7, TP1	154	203	241	5 L	60 L	A	40, 85
	Ammonia solutions, *relative density less than 0.880 at 15 degrees C in water, with more than 35 percent but not more than 50 percent ammonia.*	2.2	UN2073	.....	2.2		306	304	314, 315.	Forbidden	150 kg	E	40, 57
	Ammonium arsenate	6.1	UN1546	II	6.1	IB8, IP2, IP4, T3, TP33	153	212	242	25 kg	100 kg	A	53
	Ammonium azide	Forbidden			.....		.....	.....	.....	.....	.....		.....
	Ammonium bifluoride, solid, see Ammonium hydrogen difluoride, solid	.....			.....		.....	.....	.....	.....	.....		.....
	Ammonium bifluoride solution, see Ammonium hydrogen difluoride, solution	.....			.....		.....	.....	.....	.....	.....		.....
	Ammonium bromate	Forbidden			.....		.....	.....	.....	.....	.....		.....
	Ammonium chlorate	Forbidden			.....		.....	.....	.....	.....	.....		.....
	Ammonium dichromate	5.1	UN1439	II	5.1	IB8, IP2, IP4, T3, TP33	152	212	242	5 kg	25 kg	A	52
	Ammonium dinitro-o-cresolate, solid	6.1	UN1843	II	6.1	IB8, IP2, IP4, T3, TP33	153	212	242	25 kg	100 kg	B	36, 65, 66, 77
	Ammonium dinitro-o-cresolate solution	6.1	UN3424	II	6.1	IB2, T7, TP2	153	202	243	5 L	60 L	B	36, 66, 78, 91
	.....	.....		III	6.1	IB2, T7, TP2	153	203	241	60 L	220 L	A	36, 66, 78, 91
	Ammonium fluoride	6.1	UN2505	III	6.1	IB8, IP3, T1, TP33	153	213	240	100 kg	200 kg	A	52
	Ammonium fluorosilicate	6.1	UN2854	III	6.1	IB8, IP3, T1, TP33	153	213	240	100 kg	200 kg	A	52
	Ammonium fulminate	Forbidden			.....		.....	.....	.....	.....	.....		.....
	Ammonium hydrogen sulfate	8	UN2506	II	8	IB8, IP2, IP4, T3, TP33	154	212	240	15 kg	50 kg	A	40
	Ammonium hydrogendifluoride, solid	8	UN1727	II	8	IB8, IP2, IP4, N34, T3, TP33	154	212	240	15 kg	50 kg	A	25, 40, 52
	Ammonium hydrogendifluoride, solution	8	UN2817	II	8, 6.1	IB2, N34, T8, TP2, TP12, TP13	154	202	243	1 L	30 L	B	40
	.....	.....		III	8, 6.1	IB3, N3, T4, TP1, TP12, TP13	154	203	241	5 L	60 L	B	40, 95
	Ammonium hydrosulfide, solution, see Ammonium sulfide solution	.....			.....		.....	.....	.....	.....	.....		.....
D	Ammonium hydroxide, *see* Ammonia solutions, *etc*	.....			.....		.....	.....	.....	.....	.....		.....
	Ammonium metavanadate	6.1	UN2859	II	6.1	IB8, IP2, IP4, T3, TP33	153	212	242	25 kg	100 kg	A	44, 89, 100, 141
	Ammonium nitrate based fertilizer	5.1	UN2067	III	5.1	52, 150, IB8, IP3, T1, TP33	152	213	240	25 kg	100 kg	B	48, 59, 60, 66, 117

A W	Ammonium nitrate based fertilizer	9	UN2071	III	9	132, IB8, IP3	155	213	240	200 kg	200 kg	A	
	Ammonium nitrate emulsion *or* Ammonium nitrate suspension *or* Ammonium nitrate gel, *intermediate for blasting explosives.*	5.1	UN3375	II		147, 163	None	214	214	Forbidden	Forbidden	D	48, 59, 60, 66, 124
D	Ammonium nitrate-fuel oil mixture *containing only prilled ammonium nitrate and fuel oil*	1.5D	NA0331	II	1.5D		None	62	None	Forbidden	Forbidden	10	19E
	Ammonium nitrate, liquid *(hot concentrated solution)*	5.1	UN2426		5.1	B5, T7	None	None	243	Forbidden	Forbidden	D	59, 60
	Ammonium nitrate, *with more than 0.2 percent combustible substances, including any organic substance calculated as carbon, to the exclusion of any other added substance.*	1.1D	UN0222	II	1.1D		None	62	None	Forbidden	Forbidden	10	19E
	Ammonium nitrate, *with not more than 0.2% total combustible material, including any organic substance, calculated as carbon to the exclusion of any other added substance.*	5.1	UN1942	III	5.1	A1, A29, IB8, IP3, T1, TP33	152	213	240	25 kg	100 kg	A	48, 59, 60, 116
	Ammonium nitrite	Forbidden											
	Ammonium perchlorate	1.1D	UN0402	II	1.1D	107	None	62	None	Forbidden	Forbidden	10	19E
	Ammonium perchlorate	5.1	UN1442	II	5.1	107, A9, IB6, IP2, T3, TP33	152	212	242	5 kg	25 kg	E	58, 69
	Ammonium permanganate	Forbidden											
	Ammonium persulfate	5.1	UN1444	III	5.1	A1, A29, IB8, IP3, T1, TP33	152	213	240	25 kg	100 kg	A	
	Ammonium picrate, *dry or wetted with less than 10 percent water, by mass*	1.1D	UN0004	II	1.1D		None	62	None	Forbidden	Forbidden	10	5E, 19E
	Ammonium picrate, wetted *with not less than 10 percent water, by mass*	4.1	UN1310	I	4.1	23, A2, N41	None	211	None	0.5 kg	0.5 kg	D	28, 36
	Ammonium polysulfide, solution	8	UN2818	II	8, 6.1	IB2, T7, TP2, TP13	154	202	243	1 L	30 L	B	12, 40, 52
				III	8, 6.1	IB3, T4, TP1, TP13	154	203	241	5 L	60 L	B	12, 40, 52
	Ammonium polyvanadate	6.1	UN2861	II	6.1	IB8, IP2, IP4, T3, TP33	153	212	242	25 kg	100 kg	A	44, 89, 100, 141
	Ammonium silicofluoride, see Ammonium fluorosilicate												
	Ammonium sulfide solution	8	UN2683	II	8, 6.1, 3.	IB1, T7, TP2, TP13	154	202	243	1 L	30 L	B	12, 22, 52, 100
	Ammunition, blank, see Cartridges for weapons, blank												
	Ammunition, illuminating *with or without burster, expelling charge or propelling charge*	1.2G	UN0171	II	1.2G			62	None	Forbidden	Forbidden	03	
	Ammunition, illuminating *with or without burster, expelling charge or propelling charge*	1.3G	UN0254	II	1.3G			62	None	Forbidden	Forbidden	03	
	Ammunition, illuminating *with or without burster, expelling charge or propelling charge*	1.4G	UN0297	II	1.4G			62	None	Forbidden	75 kg	02	
	Ammunition, incendiary *liquid or gel, with burster, expelling charge or propelling charge*	1.3J	UN0247	II	1.3J			62	None	Forbidden	Forbidden	04	23E
	Ammunition, incendiary (water-activated contrivances) with burster, expelling charge or propelling charge, see Contrivances, water-activated, etc..												
	Ammunition, incendiary, white phosphorus, *with burster, expelling charge or propelling charge*	1.2H	UN0243	II	1.2H			62	None	Forbidden	Forbidden	08	8E, 14E, 15E, 17E
	Ammunition, incendiary, white phosphorus, *with burster, expelling charge or propelling charge*	1.3H	UN0244	II	1.3H			62	None	Forbidden	Forbidden	08	8E, 14E, 15E, 17E
	Ammunition, incendiary *with or without burster, expelling charge, or propelling charge*	1.2G	UN0009	II	1.2G			62	None	Forbidden	Forbidden	03	
	Ammunition, incendiary *with or without burster, expelling charge, or propelling charge*	1.3G	UN0010	II	1.3G			62	None	Forbidden	Forbidden	03	
	Ammunition, incendiary *with or without burster, expelling charge or propelling charge*	1.4G	UN0300	II	1.4G			62	None	Forbidden	75 kg	02	
	Ammunition, practice	1.4G	UN0362	II	1.4G			62	None	Forbidden	75 kg	02	
	Ammunition, practice	1.3G	UN0488	II	1.3G			62	None	Forbidden	Forbidden	03	
	Ammunition, proof	1.4G	UN0363	II	1.4G			62	None	Forbidden	75 kg	02	
	Ammunition, rocket, see Warheads, rocket *etc*												
	Ammunition, SA (small arms), see Cartridges for weapons, *etc*												
	Ammunition, smoke (water-activated contrivances), white phosphorus, with burster, expelling charge or propelling charge, see Contrivances, water-activated, *etc. (UN 0248).*												
	Ammunition, smoke (water-activated contrivances), without white phosphorus or phosphides, with burster, expelling charge or propelling charge, see Contrivances, water-activated, *etc. (UN 0249).*												
	Ammunition smoke, white phosphorus *with burster,expelling charge, or propelling charge*	1.2H	UN0245	II	1.2H			62	None	Forbidden	Forbidden	08	8E, 14E, 15E, 17E
	Ammunition, smoke, white phosphorus *with burster, expelling charge, or propelling charge*	1.3H	UN0246	II	1.3H			62	None	Forbidden	Forbidden	08	8E, 14E, 15E, 17E
	Ammunition, smoke *with or without burster, expelling charge or propelling charge*	1.2G	UN0015	II	1.2G			62	None	Forbidden	Forbidden		8E, 17E, 20E
	Ammunition, smoke *with or without burster, expelling charge or propelling charge*	1.3G	UN0016	II	1.3G			62	None	Forbidden	Forbidden		8E, 17E, 20E

§ 172.101 HAZARDOUS MATERIALS TABLE—Continued

Symbols	Hazardous materials descriptions and proper shipping names	Hazard class or Division	Identification Numbers	PG	Label Codes	Special provisions (§172.102)	(8) Packaging (§173.***)			(9) Quantity limitations		(10) Vessel stowage	
							Exceptions	Non-bulk	Bulk	Passenger aircraft/rail	Cargo aircraft only	Location	Other
(1)	(2)	(3)	(4)	(5)	(6)	(7)	(8A)	(8B)	(8C)	(9A)	(9B)	(10A)	(10B)
	Ammunition, smoke *with or without burster, expelling charge or propelling charge*	1.4G	UN0303	II	1.4G			62	None	Forbidden	75 kg		7E, 8E, 14E, 15E, 17E
	Ammunition, sporting, see Cartridges for weapons, *etc. (UN 0012; UN 0328; UN 0339)*												
	Ammunition, tear-producing, non-explosive, *without burster or expelling charge, non-fuzed*	6.1	UN2017	II	6.1, 8		None	212	None	Forbidden	50 kg	E	13, 40
	Ammunition, tear-producing *with burster, expelling charge or propelling charge*	1.2G	UN0018	II	1.2G, 8, 6.1.			62	None	Forbidden	Forbidden		8E, 17E, 20E
	Ammunition, tear-producing *with burster, expelling charge or propelling charge*	1.3G	UN0019	II	1.3G, 8, 6.1.			62	None	Forbidden	Forbidden		8E, 17E, 20E
	Ammunition, tear-producing *with burster, expelling charge or propelling charge*	1.4G	UN0301	II	1.4G, 8, 6.1.			62	None	Forbidden	75 kg		7E, 8E, 14E, 15E, 17E
	Ammunition, toxic, non-explosive, *without burster or expelling charge, non-fuzed*	6.1	UN2016	II	6.1		None	212	None	Forbidden	100 kg	E	13, 40
	Ammunition, toxic (water-activated contrivances), with burster, expelling charge or propelling charge, see Contrivances, water-activated, *etc.*												
G	Ammunition, toxic *with burster, expelling charge, or propelling charge*	1.2K	UN0020	II	1.2K, 6.1.			62	None	Forbidden	Forbidden	08	8E, 14E, 15E, 17E
G	Ammunition, toxic *with burster, expelling charge, or propelling charge*	1.3K	UN0021	II	1.3K, 6.1.			62	None	Forbidden	Forbidden	08	8E, 14E, 15E, 17E
	Amyl acetates	3	UN1104	III	3	B1, IB3, T2, TP1	150	203	242	60 L	220 L	A	
	Amyl acid phosphate	8	UN2819	III	8	IB3, T4, TP1	154	203	241	5 L	60 L	A	
	Amyl butyrates	3	UN2620	III	3	B1, IB3, T2, TP1	150	203	242	60 L	220 L	A	
	Amyl chlorides	3	UN1107	II	3	IB2, T4, TP1	150	202	242	5 L	60 L	B	
	Amyl formates	3	UN1109	III	3	B1, IB3, T2, TP1	150	203	242	60 L	220 L	A	
	Amyl mercaptans	3	UN1111	II	3	A3, A6, IB2, T4, TP1	None	202	242	5 L	60 L	B	95, 102
	n-Amyl methyl ketone	3	UN1110	III	3	B1, IB3, T2, TP1	150	203	242	60 L	220 L	A	
	Amyl nitrate	3	UN1112	III	3	B1, IB3, T2, TP1	150	203	242	60 L	220 L	A	40
	Amyl nitrites	3	UN1113	II	3	IB2, T4, TP1	150	202	242	5 L	60 L	E	40
	Amylamines	3	UN1106	II	3, 8	IB2, T7, TP1	150	202	243	1 L	5 L	B	
				III	3, 8	B1, IB3, T4, TP1	150	203	242	5 L	60 L	A	
	Amyltrichlorosilane	8	UN1728	II	8	A7, B2, B6, IB2, N34, T7, TP2, TP13	None	202	242	Forbidden	30 L	C	40
	Anhydrous ammonia, *see* Ammonia, anhydrous												
	Anhydrous hydrofluoric acid, see Hydrogen fluoride, anhydrous												
+	Aniline	6.1	UN1547	II	6.1	IB2, T7, TP2	153	202	243	5 L	60 L	A	40, 52
	Aniline hydrochloride	6.1	UN1548	III	6.1	IB8, IP3, T1, TP33	153	213	240	100 kg	200 kg	A	
	Aniline oil, see Aniline												
	Anisidines	6.1	UN2431	III	6.1	IB3, T4, TP1	153	203	241	60 L	220 L	A	
	Anisole	3	UN2222	III	3	B1, IB3, T2, TP1	150	203	242	60 L	220 L	A	
	Anisoyl chloride	8	UN1729	II	8	B2, B4, IB8, IP2, IP4, T3, TP33	154	212	240	15 kg	50 kg	A	
	Anti-freeze, liquid, see Flammable liquids, n.o.s.												
	Antimonous chloride, see Antimony trichloride												
	Antimony compounds, inorganic, liquid, n.o.s.	6.1	UN3141	III	6.1	35, IB3, T7, TP1, TP28	153	203	241	60 L	220 L	A	
	Antimony compounds, inorganic, solid, n.o.s.	6.1	UN1549	III	6.1	35, IB8, IP3, T1, TP33	153	213	240	100 kg	200 kg	A	
	Antimony lactate	6.1	UN1550	III	6.1	IB8, IP3, T1, TP33	153	213	240	100 kg	200 kg	A	
	Antimony pentachloride, liquid	8	UN1730	II	8	B2, IB2, T7, TP2	None	202	242	1 L	30 L	C	40
	Antimony pentachloride, solutions	8	UN1731	II	8	B2, IB2, T7, TP2	154	202	242	1 L	30 L	C	40
				III	8	IB3, T4, TP1	154	203	241	5 L	60 L	C	40

Antimony pentafluoride	8	UN1732	II	8, 6.1	A3, A6, A7, A10, IB2, N3, N36, T7, TP2	None	202	243	Forbidden	30 L	D	44, 89, 100, 141
Antimony potassium tartrate	6.1	UN1551	III	6.1	IB8, IP3, T1, TP33	153	213	240	100 kg	200 kg	A	
Antimony powder	6.1	UN2871	III	6.1	IB8, IP3, T1, TP33	153	213	240	100 kg	200 kg	A	
Antimony sulfide and a chlorate, mixtures of	Forbidden											
Antimony sulfide, solid, see Antimony compounds, inorganic, n.o.s.												
Antimony trichloride, liquid	8	UN1733	II	8	B2, IB2	154	202	242	1 L	30 L	C	40
Antimony trichloride, solid	8	UN1733	II	8	IB8, IP2, IP4	154	212	240	15 kg	50 kg	A	40
Aqua ammonia, see Ammonia solution, *etc*												
Argon, compressed	2.2	UN1006		2.2		306	302	314, 315.	75 kg	150 kg	A	
Argon, refrigerated liquid *(cryogenic liquid)*	2.2	UN1951		2.2	T75, TP5	320	316	318	50 kg	500 kg	B	
Arsenic	6.1	UN1558	II	6.1	IB8, IP2, IP4, T3, TP33	153	212	242	25 kg	100 kg	A	
Arsenic acid, liquid	6.1	UN1553	I	6.1	T20, TP2, TP7, TP13	None	201	243	1 L	30 L	B	46
Arsenic acid, solid	6.1	UN1554	II	6.1	IB8, IP2, IP4, T3, TP33	153	212	242	25 kg	100 kg	A	
Arsenic bromide	6.1	UN1555	II	6.1	IB8, IP2, IP4, T3, TP33	153	212	242	25 kg	100 kg	A	12, 40
Arsenic chloride, see Arsenic trichloride												
Arsenic compounds, liquid, n.o.s. *inorganic, including arsenates, n.o.s.; arsenites, n.o.s.; arsenic sulfides, n.o.s.; and organic compounds of arsenic, n.o.s.*.	6.1	UN1556	I	6.1	T14, TP2, TP13, TP27	None	201	243	1 L	30 L	B	40, 137
			II	6.1	IB2, T11, TP2, TP13, TP27	153	202	243	5 L	60 L	B	40, 137
			III	6.1	IB3, T7, TP2, TP28	153	203	241	60 L	220 L	B	40, 137
Arsenic compounds, solid, n.o.s. *inorganic, including arsenates, n.o.s.; arsenites, n.o.s.; arsenic sulfides, n.o.s.; and organic compounds of arsenic, n.o.s.*.	6.1	UN1557	I	6.1	IB7, IP1, T6, TP33	None	211	242	5 kg	50 kg	A	137
			II	6.1	IB8, IP2, IP4, T3, TP33	153	212	242	25 kg	100 kg	A	137
			III	6.1	IB8, IP3, T1, TP33	153	213	240	100 kg	200 kg	A	137
Arsenic pentoxide	6.1	UN1559	II	6.1	IB8, IP2, IP4, T3, TP33	153	212	242	25 kg	100 kg	A	
Arsenic sulfide and a chlorate, mixtures of	Forbidden											
Arsenic trichloride	6.1	UN1560	I	6.1	2, B9, B14, B32, B74, T20, TP2, TP13, TP38, TP45	None	227	244	Forbidden	Forbidden	B	40
Arsenic trioxide	6.1	UN1561	II	6.1	IB8, IP2, IP4, T3, TP33	153	212	242	25 kg	100 kg	A	
Arsenic, white, solid, see Arsenic trioxide												
Arsenical dust	6.1	UN1562	II	6.1	IB8, IP2, IP4, T3, TP33	153	212	242	25 kg	100 kg	A	
Arsenical pesticides, liquid, flammable, toxic, *flash point less than 23 degrees C*	3	UN2760	I	3, 6.1	T14, TP2, TP13, TP27	None	201	243	Forbidden	30 L	B	40
			II	3, 6.1	IB2, T11, TP2, TP13, TP27	150	202	243	1 L	60 L	B	40
Arsenical pesticides, liquid, toxic	6.1	UN2994	I	6.1	T14, TP2, TP13, TP27	None	201	243	1 L	30 L	B	40
			II	6.1	IB2, T11, TP2, TP13, TP27	153	202	243	5 L	60 L	B	40
			III	6.1	IB3, T7, TP2, TP28	153	203	241	60 L	220 L	A	40
Arsenical pesticides, liquid, toxic, flammable, *flash point not less than 23 degrees C*	6.1	UN2993	I	6.1, 3	T14, TP2, TP13, TP27	None	201	243	1 L	30 L	B	40
			II	6.1, 3	IB2, T11, TP2, TP13, TP27	153	202	243	5 L	60 L	B	40
			III	6.1, 3	B1, IB3, T7, TP2, TP28	153	203	242	60 L	220 L	A	40
Arsenical pesticides, solid, toxic	6.1	UN2759	I	6.1	IB7, IP1, T6, TP33	None	211	242	5 kg	50 kg	A	40
			II	6.1	IB8, IP2, IP4, T3, TP33	153	212	242	25 kg	100 kg	A	40
			III	6.1	IB8, IP3, T1, TP33	153	213	240	100 kg	200 kg	A	40
Arsenious acid, solid, see Arsenic trioxide												
Arsenious and mercuric iodide solution, see Arsenic compounds, liquid, n.o.s.												
Arsine	2.3	UN2188		2.3, 2.1.	1	None	192	245	Forbidden	Forbidden	D	40
Articles, explosive, extremely insensitive *or* Articles, EEI	1.6N	UN0486	II	1.6N	101	None	62	None	Forbidden	Forbidden	07	

§ 172.101 HAZARDOUS MATERIALS TABLE—Continued

Symbols	Hazardous materials descriptions and proper shipping names	Hazard class or Division	Identification Numbers	PG	Label Codes	Special provisions (§172.102)	(8) Packaging (§173.***)			(9) Quantity limitations		(10) Vessel stowage	
							Exceptions	Non-bulk	Bulk	Passenger aircraft/rail	Cargo aircraft only	Location	Other
(1)	(2)	(3)	(4)	(5)	(6)	(7)	(8A)	(8B)	(8C)	(9A)	(9B)	(10A)	(10B)
G	Articles, explosive, n.o.s.	1.4S	UN0349	II	1.4S	101	None	62	None	25 kg	100 kg	05	
G	Articles, explosive, n.o.s.	1.4B	UN0350	II	1.4B	101	None	62	None	Forbidden	Forbidden	06	
G	Articles, explosive, n.o.s.	1.4C	UN0351	II	1.4C	101	None	62	None	Forbidden	75 kg	06	
G	Articles, explosive, n.o.s.	1.4D	UN0352	II	1.4D	101	None	62	None	Forbidden	75 kg	06	
G	Articles, explosive, n.o.s.	1.4G	UN0353	II	1.4G	101	None	62	None	Forbidden	75 kg	06	
G	Articles, explosive, n.o.s.	1.1L	UN0354	II	1.1L	101	None	62	None	Forbidden	Forbidden	08	8E, 14E, 15E, 17E
G	Articles, explosive, n.o.s.	1.2L	UN0355	II	1.2L	101	None	62	None	Forbidden	Forbidden	08	8E, 14E, 15E, 17E
G	Articles, explosive, n.o.s.	1.3L	UN0356	II	1.3L	101	None	62	None	Forbidden	Forbidden	08	8E, 14E, 15E, 17E
G	Articles, explosive, n.o.s.	1.1C	UN0462	II	1.1C	101	None	62	None	Forbidden	Forbidden	07	
G	Articles, explosive, n.o.s.	1.1D	UN0463	II	1.1D	101	None	62	None	Forbidden	Forbidden	07	
G	Articles, explosive, n.o.s.	1.1E	UN0464	II	1.1E	101	None	62	None	Forbidden	Forbidden	07	
G	Articles, explosive, n.o.s.	1.1F	UN0465	II	1.1F	101	None	62	None	Forbidden	Forbidden	08	
G	Articles, explosive, n.o.s.	1.2C	UN0466	II	1.2C	101	None	62	None	Forbidden	Forbidden	07	
G	Articles, explosive, n.o.s.	1.2D	UN0467	II	1.2D	101	None	62	None	Forbidden	Forbidden	07	
G	Articles, explosive, n.o.s.	1.2E	UN0468	II	1.2E	101	None	62	None	Forbidden	Forbidden	07	
G	Articles, explosive, n.o.s.	1.2F	UN0469	II	1.2F	101	None	62	None	Forbidden	Forbidden	08	
G	Articles, explosive, n.o.s.	1.3C	UN0470	II	1.3C	101	None	62	None	Forbidden	Forbidden	07	
G	Articles, explosive, n.o.s.	1.4E	UN0471	II	1.4E	101	None	62	None	Forbidden	75 kg	06	
G	Articles, explosive, n.o.s.	1.4F	UN0472	II	1.4F	101	None	62	None	Forbidden	Forbidden	08	
	Articles, pressurized pneumatic *or* hydraulic *containing non-flammable gas*	2.2	UN3164		2.2		306	302, 304.	None	No limit	No limit	A	
	Articles, pyrophoric	1.2L	UN0380	II	1.2L		None	62	None	Forbidden	Forbidden	08	8E, 14E, 15E, 17E
	Articles, pyrotechnic *for technical purposes*	1.1G	UN0428	II	1.1G		None	62	None	Forbidden	Forbidden	07	
	Articles, pyrotechnic *for technical purposes*	1.2G	UN0429	II	1.2G		None	62	None	Forbidden	Forbidden	07	
	Articles, pyrotechnic *for technical purposes*	1.3G	UN0430	II	1.3G		None	62	None	Forbidden	Forbidden	07	
	Articles, pyrotechnic *for technical purposes*	1.4G	UN0431	II	1.4G		None	62	None	Forbidden	75 kg	06	
	Articles, pyrotechnic *for technical purposes*	1.4S	UN0432	II	1.4S		None	62	None	25 kg	100 kg	05	
D	Asbestos	9	NA2212	III	9	156, IB8, IP2, IP4	155	216	240	200 kg	200 kg	A	34, 40
	Ascaridole (organic peroxide)	Forbidden											
D	Asphalt, *at or above its flash point*	3	NA1999	III	3	IB3, T1, TP3	150	203	247	Forbidden	Forbidden	D	
D	Asphalt, cut back, *see* Tars, liquid, *etc*												
	Automobile, motorcycle, tractor, other self-propelled vehicle, engine, or other mechanical apparatus, see Vehicles *or* Battery *etc.*												
A G	Aviation regulated liquid, n.o.s.	9	UN3334		9	A35	155	204		No limit	No limit	A	
A G	Aviation regulated solid, n.o.s.	9	UN3335		9	A35	155	204		No limit	No limit	A	
	Azaurolic acid (salt of) (dry)	Forbidden											
	Azido guanidine picrate (dry)	Forbidden											
	5-Azido-1-hydroxy tetrazole	Forbidden											
	Azido hydroxy tetrazole (mercury and silver salts)	Forbidden											
	3-Azido-1,2-Propylene glycol dinitrate	Forbidden											
	Azidodithiocarbonic acid	Forbidden											
	Azidoethyl nitrate	Forbidden											
	1-Aziridinylphosphine oxide-(tris), see Tris-(1-aziridinyl) phosphine oxide, solution												
	Azodicarbonamide	4.1	UN3242	II	4.1	38, IB8, T3, TP33	151	212	240	Forbidden	Forbidden	D	12, 52, 53, 74
	Azotetrazole (dry)	Forbidden											
	Barium	4.3	UN1400	II	4.3	A19, IB7, IP2, T3, TP33	151	212	241	15 kg	50 kg	E	52
	Barium alloys, pyrophoric	4.2	UN1854	I	4.2	T21, TP7, TP33	None	181	None	Forbidden	Forbidden	D	
	Barium azide, *dry or wetted with less than 50 percent water, by mass*	1.1A	UN0224	II	1.1A, 6.1.	111, 117	None	62	None	Forbidden	Forbidden	12	

Barium azide, wetted *with not less than 50 percent water, by mass*	4.1	UN1571	I	4.1, 6.1.	162, A2	None	182	None	Forbidden	0.5 kg	D	28
Barium bromate	5.1	UN2719	II	5.1, 6.1.	IB8, IP2, IP4, T3, TP33	152	212	242	5 kg	25 kg	A	56, 58
Barium chlorate, solid	5.1	UN1445	II	5.1, 6.1.	A9, IB6, IP2, N34, T3, TP33	152	212	242	5 kg	25 kg	A	56, 58
Barium chlorate, solution	5.1	UN3405	II	5.1, 6.1.	A9, IB2, N34, T4, TP1	152	202	243	1 L	5 L	A	56, 58, 133
			III	5.1, 6.1.	A9, IB2, N34, T4, TP1	152	203	242	2.5 L	30 L	A	56, 58, 133
Barium compounds, n.o.s.	6.1	UN1564	II	6.1	IB8, IP2, IP4, T3, TP33	153	212	242	25 kg	100 kg	A	
			III	6.1	IB8, IP3, T1, TP33	153	213	240	100 kg	200 kg	A	
Barium cyanide	6.1	UN1565	I	6.1	IB7, IP1, N74, N75, T6, TP33	None	211	242	5 kg	50 kg	A	40, 52
Barium hypochlorite *with more than 22 percent available chlorine*	5.1	UN2741	II	5.1, 6.1.	A7, A9, IB8, IP2, IP4, N34, T3, TP33	152	212	None	5 kg	25 kg	B	4, 52, 56, 58, 106
Barium nitrate	5.1	UN1446	II	5.1, 6.1.	IB8, IP2, IP4, T3, TP33	152	212	242	5 kg	25 kg	A	
Barium oxide	6.1	UN1884	III	6.1	IB8, IP3, T1, TP33	153	213	240	100 kg	200 kg	A	
Barium perchlorate, solid	5.1	UN1447	II	5.1, 6.1.	IB6, IP2, T3, TP33	152	212	242	5 kg	25 kg	A	56, 58
Barium perchlorate, solution	5.1	UN3406	II	5.1, 6.1.	IB2, T4, TP1	152	202	243	1 L	5 L	A	56, 58, 133
			III	5.1, 6.1.	IB2, T4, TP1	152	203	242	2.5 L	30 L	A	56, 58, 133
Barium permanganate	5.1	UN1448	II	5.1, 6.1.	IB6, IP2, T3, TP33	152	212	242	5 kg	25 kg	D	56, 58, 138
Barium peroxide	5.1	UN1449	II	5.1, 6.1.	A9, IB6, IP2, T3, TP33	152	212	242	5 kg	25 kg	A	13, 52, 56, 75
Barium selenate, see Selenates *or* Selenites												
Barium selenite, see Selenates *or* Selenites												
Batteries, containing sodium	4.3	UN3292	II	4.3		189	189	189	Forbidden	No limit	A	
Batteries, dry, containing potassium hydroxide solid, *electric, storage*	8	UN3028	III	8		None	213	None	25 kg gross	230 kg gross	A	
Batteries, wet, filled with acid, *electric storage*	8	UN2794	III	8		159	159	159	30 kg gross	No limit	A	
Batteries, wet, filled with alkali, *electric storage*	8	UN2795	III	8		159	159	159	30 kg gross	No limit	A	
Batteries, wet, non-spillable, *electric storage*	8	UN2800	III	8		159	159	159	No Limit	No Limit	A	
Batteries, dry, *not subject to the requirements of this subchapter*					130							
Battery fluid, acid	8	UN2796	II	8	A3, A7, B2, B15, IB2, N6, N34, T8, TP2, TP12	154	202	242	1 L	30 L	B	
Battery fluid, alkali	8	UN2797	II	8	B2, IB2, N6, T7, TP2, TP28	154	202	242	1 L	30 L	A	29
Battery lithium type, see Lithium batteries *etc*												
Battery-powered vehicle *or* Battery-powered equipment	9	UN3171		9	134	220	220	None	No limit	No limit		
Battery, wet, filled with acid or alkali with vehicle or mechanical equipment containing an internal combustion engine, see Vehicle, *etc. or* Engines, internal combustion, *etc.*												
+ Benzaldehyde	9	UN1990	III	9	IB3, T2, TP1	155	203	241	100 L	220 L	A	
Benzene	3	UN1114	II	3	IB2, T4, TP1	150	202	242	5 L	60 L	B	40
Benzene diazonium chloride (dry)	Forbidden											
Benzene diazonium nitrate (dry)	Forbidden											
Benzene phosphorus dichloride, see Phenyl phosphorus dichloride												
Benzene phosphorus thiodichloride, see Phenyl phosphorus thiodichloride												
Benzene sulfonyl chloride	8	UN2225	III	8	IB3, T4, TP1	154	203	241	5 L	60 L	A	40
Benzene triozonide	Forbidden											
Benzenethiol, see Phenyl mercaptan												
Benzidine	6.1	UN1885	II	6.1	IB8, IP2, IP4, T3, TP33	153	212	242	25 kg	100 kg	A	
Benzol, see Benzene												
Benzonitrile	6.1	UN2224	II	6.1	IB2, T7, TP2	153	202	243	5 L	60 L	A	40, 52
Benzoquinone	6.1	UN2587	II	6.1	IB8, IP2, IP4, T3, TP33	153	212	242	25 kg	100 kg	A	
Benzotrichloride	8	UN2226	II	8	B2, IB2, T7, TP2	154	202	242	1 L	30 L	A	40
Benzotrifluoride	3	UN2338	II	3	IB2, T4, TP1	150	202	242	5 L	60 L	B	40
Benzoxidiazoles (dry)	Forbidden											
Benzoyl azide	Forbidden											
Benzoyl chloride	8	UN1736	II	8	B2, IB2, T8, TP2, TP12, TP13	154	202	242	1 L	30 L	C	40
Benzyl bromide	6.1	UN1737	II	6.1, 8	A3, A7, IB2, N33, N34, T8, TP2, TP12, TP13	153	202	243	1 L	30 L	D	13, 40

§ 172.101 HAZARDOUS MATERIALS TABLE—Continued

Symbols	Hazardous materials descriptions and proper shipping names	Hazard class or Division	Identification Numbers	PG	Label Codes	Special provisions (§172.102)	(8) Packaging (§173.***)			(9) Quantity limitations		(10) Vessel stowage	
							Exceptions	Non-bulk	Bulk	Passenger aircraft/rail	Cargo aircraft only	Location	Other
(1)	(2)	(3)	(4)	(5)	(6)	(7)	(8A)	(8B)	(8C)	(9A)	(9B)	(10A)	(10B)
	Benzyl chloride	6.1	UN1738	II	6.1, 8	A3, A7, B70, IB2, N33, N42, T8, TP2, TP12, TP13	153	202	243	1 L	30 L	D	13, 40
	Benzyl chloride *unstabilized*	6.1	UN1738	II	6.1, 8	A3, A7, B8, B11, IB2, N33, N34, N43, T8, TP2, TP12, TP13	153	202	243	1 L	30 L	D	13, 40
	Benzyl chloroformate	8	UN1739	I	8	A3, A6, B4, N41, T10, TP2, TP12, TP13	None	201	243	Forbidden	2.5 L	D	40
	Benzyl iodide	6.1	UN2653	II	6.1	IB2, T7, TP2	153	202	243	5 L	60 L	B	12, 40
	Benzyldimethylamine	8	UN2619	II	8, 3	B2, IB2, T7, TP2	154	202	243	1 L	30 L	A	40, 48
	Benzylidene chloride	6.1	UN1886	II	6.1	IB2, T7, TP2	153	202	243	5 L	60 L	D	40
	Beryllium compounds, n.o.s.	6.1	UN1566	II	6.1	IB8, IP2, IP4, T3, TP33	153	212	242	25 kg	100 kg	A	
				III	6.1	IB8, IP3, T1, TP33	153	213	240	100 kg	200 kg	A	
	Beryllium nitrate	5.1	UN2464	II	5.1, 6.1.	IB8, IP2, IP4, T3, TP33	152	212	242	5 kg	25 kg	A	
	Beryllium, powder	6.1	UN1567	II	6.1, 4.1.	IB8, IP2, IP4, T3, TP33	153	212	242	15 kg	50 kg	A	
	Bicyclo [2,2,1] hepta-2,5-diene, stabilized *or* 2,5-Norbornadiene, stabilized	3	UN2251	II	3	IB2, T7, TP2	150	202	242	5 L	60 L	D	
	Biphenyl triozonide	Forbidden											
	Bipyridilium pesticides, liquid, flammable, toxic, *flash point less than 23 degrees C*	3	UN2782	I	3, 6.1	T14, TP2, TP13, TP27	None	201	243	Forbidden	30 L	E	
				II	3, 6.1	IB2, T11, TP2, TP13, TP27	150	202	243	1 L	60 L	B	40
	Bipyridilium pesticides, liquid, toxic	6.1	UN3016	I	6.1	T14, TP2, TP13, TP27	None	201	243	1 L	30 L	B	40
				II	6.1	IB2, T11, TP2, TP13, TP27	153	202	243	5 L	60 L	B	40
				III	6.1	IB3, T7, TP2, TP28	153	203	241	60 L	220 L	A	40
	Bipyridilium pesticides, liquid, toxic, flammable, *flash point not less than 23 degrees C*	6.1	UN3015	I	6.1, 3	T14, TP2, TP13, TP27	None	201	243	1 L	30 L	B	21, 40
				II	6.1, 3	IB2, T11, TP2, TP13, TP27	153	202	243	5 L	60 L	B	21, 40
				III	6.1, 3	B1, IB3, T7, TP2, TP28	153	203	242	60 L	220 L	A	21, 40
	Bipyridilium pesticides, solid, toxic	6.1	UN2781	I	6.1	IB7, IP1, T6, TP33	None	211	242	5 kg	50 kg	A	40
				II	6.1	IB8, IP2, IP4, T3, TP33	153	212	242	25 kg	100 kg	A	40
				III	6.1	IB8, IP3, T1, TP33	153	213	240	100 kg	200 kg	A	40
	Bis (Aminopropyl) piperazine, see Corrosive liquid, n.o.s.												
	Bisulfate, aqueous solution	8	UN2837	II	8	A7, B2, IB2, N34, T7, TP2	154	202	242	1 L	30 L	A	
				III	8	A7, IB3, N34, T4, TP1	154	203	241	5 L	60 L	A	
	Bisulfites, aqueous solutions, n.o.s.	8	UN2693	III	8	IB3, T7, TP1, TP28	154	203	241	5 L	60 L	A	40, 52
	Black powder, compressed *or* Gunpowder, compressed *or* Black powder, in pellets *or* Gunpowder, in pellets.	1.1D	UN0028	II	1.1D		None	62	None	Forbidden	Forbidden	10	
	Black powder *or* Gunpowder, *granular or as a meal*	1.1D	UN0027	II	1.1D		None	62	None	Forbidden	Forbidden	10	
D	Black powder for small arms	4.1	NA0027	I	4.1	70	None	170	None	Forbidden	Forbidden	E	
	Blasting agent, n.o.s., see Explosives, blasting *etc*												
	Blasting cap assemblies, see Detonator assemblies, non-electric, *for blasting*												
	Blasting caps, electric, see Detonators, electric *for blasting*												
	Blasting caps, non-electric, see Detonators, non-electric, *for blasting*												
	Bleaching powder, see Calcium hypochlorite mixtures, *etc*												
I	Blue asbestos *(Crocidolite) or* Brown asbestos *(amosite, mysorite)*	9	UN2212	II	9	156, IB8, IP2, IP4, T3, TP33	155	216	240	Forbidden	Forbidden	A	34, 40
	Bombs, photo-flash	1.1F	UN0037	II	1.1F			62	None	Forbidden	Forbidden	08	
	Bombs, photo-flash	1.1D	UN0038	II	1.1D			62	None	Forbidden	Forbidden	03	

	Bombs, photo-flash	1.2G	UN0039	II	1.2G		.....	62	None	Forbidden	Forbidden	03	.....
	Bombs, photo-flash	1.3G	UN0299	II	1.3G		.....	62	None	Forbidden	Forbidden	03	.....
	Bombs, smoke, non-explosive, *with corrosive liquid, without initiating device*	8	UN2028	II	8		None	160	None	Forbidden	50 kg	E	40
	Bombs, *with bursting charge*	1.1F	UN0033	II	1.1F		.....	62	None	Forbidden	Forbidden	08	.....
	Bombs, *with bursting charge*	1.1D	UN0034	II	1.1D		.....	62	None	Forbidden	Forbidden	03	.....
	Bombs, *with bursting charge*	1.2D	UN0035	II	1.2D		.....	62	None	Forbidden	Forbidden	03	.....
	Bombs, *with bursting charge*	1.2F	UN0291	II	1.2F		.....	62	None	Forbidden	Forbidden	08	.....
	Bombs with flammable liquid, *with bursting charge*	1.1J	UN0399	II	1.1J		.....	62	None	Forbidden	Forbidden	04	23E
	Bombs with flammable liquid, *with bursting charge*	1.2J	UN0400	II	1.2J		.....	62	None	Forbidden	Forbidden	04	23E
	Boosters with detonator	1.1B	UN0225	II	1.1B		None	62	None	Forbidden	Forbidden	11	.....
	Boosters with detonator	1.2B	UN0268	II	1.2B		None	62	None	Forbidden	Forbidden	07	.....
	Boosters, *without detonator*	1.1D	UN0042	II	1.1D		None	62	None	Forbidden	Forbidden	07	.....
	Boosters, *without detonator*	1.2D	UN0283	II	1.2D		None	62	None	Forbidden	Forbidden	07	.....
	Borate and chlorate mixtures, see Chlorate and borate mixtures	.....			.....		.....	.....	.....	.....	.....		.....
	Borneol	4.1	UN1312	III	4.1	A1, IB8, IP3, T1, TP33	None	213	240	25 kg	100 kg	A	.....
+	Boron tribromide	8	UN2692	I	8, 6.1	2, B9, B14, B32, B74, N34, T20, TP2, TP12, TP13, TP38, TP45	None	227	244	Forbidden	Forbidden	C	12
	Boron trichloride	2.3	UN1741	.....	2.3, 8	3, B9, B14	None	304	314	Forbidden	Forbidden	D	25, 40
	Boron trifluoride	2.3	UN1008	.....	2.3	2, B9, B14	None	302	314, 315.	Forbidden	Forbidden	D	40
	Boron trifluoride acetic acid complex, liquid	8	UN1742	II	8	B2, B6, IB2, T8, TP2, TP12	154	202	242	1 L	30 L	A	.....
	Boron trifluoride acetic acid complex, solid	8	UN3419	II	8	B2, B6, IB8, IP2, IP4, T3, TP33	154	212	240	15 kg	50 kg	A	.....
	Boron trifluoride diethyl etherate	8	UN2604	I	8, 3	A3, A19, T10, TP2	None	201	243	0.5 L	2.5 L	D	40
	Boron trifluoride dihydrate	8	UN2851	II	8	IB2, T7, TP2	154	212	240	15 kg	50 kg	B	12, 40,
	Boron trifluoride dimethyl etherate	4.3	UN2965	I	4.3, 8, 3.	A19, T10, TP2, TP7	None	201	243	Forbidden	1 L	D	21, 28, 40, 49, 100
	Boron trifluoride propionic acid complex, liquid	8	UN1743	II	8	B2, IB2, T8, TP2, TP12	154	202	242	1 L	30 L	A	.....
	Boron trifluoride propionic acid complex, solid	8	UN3420	II	8	B2, IB8, IP2, IP4, T3, TP33	154	212	240	15 kg	50 kg	A	.....
	Box toe gum, see Nitrocellulose *etc*	.....			.....		.....	.....	.....	.....	.....		.....
	Bromates, inorganic, aqueous solution, n.o.s.	5.1	UN3213	II	5.1	IB2, T4, TP1	152	202	242	1 L	5 L	B	56, 58, 133
	.....	.....		III	5.1	IB2, T4, TP1	152	203	241	2.5 L	30 L	B	56, 58, 133
	Bromates, inorganic, n.o.s.	5.1	UN1450	II	5.1	IB8, IP2, IP4, T3, TP33	152	212	242	5 kg	25 kg	A	56, 58
	Bromine azide	Forbidden			.....		.....	.....	.....	.....	.....		.....
+	Bromine *or* Bromine solutions	8	UN1744	I	8, 6.1	1, B9, B64, B85, N34, N43, T22, TP2, TP10, TP12, TP13	None	226	249	Forbidden	Forbidden		12, 40, 66, 74, 89, 90
	Bromine chloride	2.3	UN2901	.....	2.3, 8, 5.1.	2, B9, B14	None	304	314, 315.	Forbidden	Forbidden	D	40, 89, 90
+	Bromine pentafluoride	5.1	UN1745	I	5.1, 6.1, 8.	1, B9, B14, B30, B72, T22, TP2, TP12, TP13, TP38, TP44	None	228	244	Forbidden	Forbidden	D	25, 40, 66, 90
+	Bromine trifluoride	5.1	UN1746	I	5.1, 6.1, 8.	2, B9, B14, B32, B74, T22, TP2, TP12, TP13, TP38, TP45	None	228	244	Forbidden	Forbidden	D	25, 40, 66, 90
	4-Bromo-1,2-dinitrobenzene	Forbidden			.....		.....	.....	.....	.....	.....		.....
	4-Bromo-1,2-dinitrobenzene (unstable at 59 degrees C)	Forbidden			.....		.....	.....	.....	.....	.....		.....
	1-Bromo-3-chloropropane	6.1	UN2688	III	6.1	IB3, T4, TP1	153	203	241	60 L	220 L	A	.....
	1-Bromo-3-methylbutane	3	UN2341	III	3	B1, IB3, T2, TP1	150	203	242	60 L	220 L	A	.....
	1-Bromo-3-nitrobenzene (unstable at 56 degrees C)	Forbidden			.....		.....	.....	.....	.....	.....		.....
	2-Bromo-2-nitropropane-1,3-diol	4.1	UN3241	III	4.1	46, IB8, IP3	151	213	None	25 kg	50 kg	C	12, 25, 40
	Bromoacetic acid, solid	8	UN3425	II	8	A7, IB8, IP2, IP4, N34, T3, TP33	154	212	240	15 kg	50 kg	A	.....
	Bromoacetic acid solution	8	UN1938	II	8	A7, B2, IB2, T7, TP2	154	202	242	1 L	30 L	A	40
	.....	.....		III	8	B2, IB3, T7, TP2	154	203	241	5 L	60 L	A	40
+	Bromoacetone	6.1	UN1569	II	6.1, 3	2, T20, TP2, TP13	None	193	245	Forbidden	Forbidden	D	40

§ 172.101 HAZARDOUS MATERIALS TABLE—Continued

Symbols	Hazardous materials descriptions and proper shipping names	Hazard class or Division	Identification Numbers	PG	Label Codes	Special provisions (§172.102)	(8) Packaging (§173.***) Exceptions	Non-bulk	Bulk	(9) Quantity limitations Passenger aircraft/rail	Cargo aircraft only	(10) Vessel stowage Location	Other
(1)	(2)	(3)	(4)	(5)	(6)	(7)	(8A)	(8B)	(8C)	(9A)	(9B)	(10A)	(10B)
	Bromoacetyl bromide	8	UN2513	II	8	B2, IB2, T8, TP2, TP12	154	202	242	1 L	30 L	C	40, 53
	Bromobenzene	3	UN2514	III	3	B1, IB3, T2, TP1	150	203	242	60 L	220 L	A	
	Bromobenzyl cyanides, liquid	6.1	UN1694	I	6.1	T14, TP2, TP13	None	201	243	Forbidden	30 L	D	12, 40, 52
	Bromobenzyl cyanides, solid	6.1	UN3449	I	6.1	T6, TP33	None	211	242	5 kg	50 kg	D	12, 40, 52
	1-Bromobutane	3	UN1126	II	3	IB2, T4, TP1	150	202	242	5 L	60 L	B	40
	2-Bromobutane	3	UN2339	II	3	B1, IB2, T4, TP1	150	202	242	5 L	60 L	B	40
	Bromochloromethane	6.1	UN1887	III	6.1	IB3, T4, TP1	153	203	241	60 L	220 L	A	
	2-Bromoethyl ethyl ether	3	UN2340	II	3	IB2, T4, TP1	150	202	242	5 L	60 L	B	40
	Bromoform	6.1	UN2515	III	6.1	IB3, T4, TP1	153	203	241	60 L	220 L	A	12, 40
	Bromomethylpropanes	3	UN2342	II	3	IB2, T4, TP1	150	202	242	5 L	60 L	B	
	2-Bromopentane	3	UN2343	II	3	IB2, T4, TP1	150	202	242	5 L	60 L	B	
	Bromopropanes	3	UN2344	II	3	IB2, T4, TP1	150	202	242	5 L	60 L	B	40
				III	3	IB3, T2, TP1	150	203	242	60 L	220 L	A	
	3-Bromopropyne	3	UN2345	II	3	IB2, T4, TP1	150	202	242	5 L	60 L	D	40
	Bromosilane	Forbidden											
	Bromotoluene-alpha, see Benzyl bromide												
	Bromotrifluoroethylene	2.1	UN2419		2.1		None	304	314, 315.	Forbidden	150 kg	B	40
	Bromotrifluoromethane *or* Refrigerant gas, R 13B1.	2.2	UN1009		2.2	T50	306	304	314, 315.	75 kg	150 kg	A	
	Brucine	6.1	UN1570	I	6.1	IB7, IP1, T6, TP33	None	211	242	5 kg	50 kg	A	
	Bursters, *explosive*	1.1D	UN0043	II	1.1D		None	62	None	Forbidden	Forbidden	07	
	Butadienes, stabilized *or* Butadienes and Hydrocarbon mixture, stabilized *containing more than 40% butadienes.*	2.1	UN1010		2.1	T50	306	304	314, 315.	Forbidden	150 kg	B	40
	Butane *see also* Petroleum gases, liquefied	2.1	UN1011		2.1	19, T50	306	304	314, 315.	Forbidden	150 kg	E	40
	Butane, butane mixtures and mixtures having similar properties in cartridges each not exceeding 500 grams, see Receptacles, *etc.*												
	Butanedione	3	UN2346	II	3	IB2, T4, TP1	150	202	242	5 L	60 L	B	
	1,2,4-Butanetriol trinitrate	Forbidden											
	Butanols	3	UN1120	II	3	IB2, T4, TP1, TP29	150	202	242	5 L	60 L	B	
				III	3	B1, IB3, T2, TP1	150	203	242	60 L	220 L	A	
	tert-Butoxycarbonyl azide	Forbidden											
	Butyl acetates	3	UN1123	II	3	IB2, T4, TP1	150	202	242	5 L	60 L	B	
				III	3	B1, IB3, T2, TP1	150	203	242	60 L	220 L	A	
	Butyl acid phosphate	8	UN1718	III	8	IB3, T4, TP1	154	203	241	5 L	60 L	A	
	Butyl acrylates, stabilized	3	UN2348	III	3	B1, IB3, T2, TP1	150	203	242	60 L	220 L	A	
	Butyl alcohols, see Butanols												
	Butyl benzenes	3	UN2709	III	3	B1, IB3, T2, TP1	150	203	242	60 L	220 L	A	
	n-Butyl bromide, see 1-Bromobutane												
	n-Butyl chloride, see Chlorobutanes												
D	sec-Butyl chloroformate	6.1	NA2742	I	6.1, 3, 8.	2, B9, B14, B32, B74, T20, TP4, TP12, TP13, TP38, TP45	None	227	244	1 L	30 L	A	12, 13, 22, 25, 40, 48, 100
	n-Butyl chloroformate	6.1	UN2743	I	6.1, 8, 3.	2, B9, B14, B32, B74, T20, TP2, TP13, TP38, TP45	None	227	244	Forbidden	Forbidden	A	12, 13, 21, 25, 40, 100
	Butyl ethers, see Dibutyl ethers												
	Butyl ethyl ether, see Ethyl butyl ether												
	n-Butyl formate	3	UN1128	II	3	IB2, T4, TP1	150	202	242	5 L	60 L	B	
	tert-Butyl hydroperoxide, with more than 90 percent with water	Forbidden											
	tert-Butyl hypochlorite	4.2	UN3255	I	4.2, 8		None	211	243	Forbidden	Forbidden	D	
	N-n-Butyl imidazole	6.1	UN2690	II	6.1	IB2, T7, TP2	153	202	243	5 L	60 L	A	
	tert-Butyl isocyanate	6.1	UN2484	I	6.1, 3	1, B9, B14, B30, B72, T22, TP2, TP13, TP38, TP44	None	226	244	Forbidden	Forbidden	D	40

n-Butyl isocyanate	6.1	UN2485	I	6.1, 3	2, B9, B14, B32, B74, B77, T20, TP2, TP13, TP38, TP45	None	227	244	Forbidden	Forbidden	D	40
Butyl mercaptans	3	UN2347	II	3	A3, A6, IB2, T4, TP1	150	202	242	5 L	60 L	D	52, 95
n-Butyl methacrylate, stabilized	3	UN2227	III	3	B1, IB3, T2, TP1	150	203	242	60 L	220 L	A	
Butyl methyl ether	3	UN2350	II	3	IB2, T4, TP1	150	202	242	5 L	60 L	B	
Butyl nitrites	3	UN2351	I	3	T11, TP1, TP8, TP27	150	201	243	1 L	30 L	E	40
			II	3	IB2, T4, TP1	150	202	242	5 L	60 L	B	40
			III	3	B1, IB3, T2, TP1	150	203	242	60 L	220 L	A	40
tert-Butyl peroxyacetate, with more than 76 percent in solution	Forbidden											
n-Butyl peroxydicarbonate, with more than 52 percent in solution	Forbidden											
tert-Butyl peroxyisobutyrate, with more than 77 percent in solution	Forbidden											
Butyl phosphoric acid, see Butyl acid phosphate												
Butyl propionates	3	UN1914	III	3	B1, IB3, T2, TP1	150	203	242	60 L	220 L	A	
5-tert-Butyl-2,4,6-trinitro-m-xylene *or* Musk xylene	4.1	UN2956	III	4.1	159	None	223	None	Forbidden	Forbidden	D	D12, 25, 48, 127
Butyl vinyl ether, stabilized	3	UN2352	II	3	IB2, T4, TP1	150	202	242	5 L	60 L	B	40
n-Butylamine	3	UN1125	II	3, 8	IB2, T7, TP1	150	202	242	1 L	5 L	B	40
N-Butylaniline	6.1	UN2738	II	6.1	IB2, T7, TP2	153	202	243	5 L	60 L	A	74
tert-Butylcyclohexylchloroformate	6.1	UN2747	III	6.1	IB3, T4, TP1	153	203	241	60 L	220 L	A	12, 13, 25
Butylene *see also* Petroleum gases, liquefied	2.1	UN1012		2.1	19, T50	306	304	314, 315.	Forbidden	150 kg	E	40
1,2-Butylene oxide, stabilized	3	UN3022	II	3	IB2, T4, TP1	150	202	242	5 L	60 L	B	27, 49
Butyltoluenes	6.1	UN2667	III	6.1	IB3, T4, TP1	153	203	241	60 L	220 L	A	
Butyltrichlorosilane	8	UN1747	II	8, 3	A7, B2, B6, IB2, N34, T7, TP2, TP13	None	202	243	Forbidden	30 L	C	40
1,4-Butynediol	6.1	UN2716	III	6.1	A1, IB8, IP3, T1, TP33	None	213	240	100 kg	200 kg	A	52, 53, 70, 139, 140
Butyraldehyde	3	UN1129	II	3	IB2, T4, TP1	150	202	242	5 L	60 L	B	
Butyraldoxime	3	UN2840	III	3	B1, IB3, T2, TP1	150	203	242	60 L	220 L	A	
Butyric acid	8	UN2820	III	8	IB3, T4, TP1	154	203	241	5 L	60 L	A	12
Butyric anhydride	8	UN2739	III	8	IB3, T4, TP1	154	203	241	5 L	60 L	A	
Butyronitrile	3	UN2411	II	3, 6.1	IB2, T7, TP1, TP13	150	202	243	1 L	60 L	E	40
Butyryl chloride	3	UN2353	II	3, 8	IB2, T8, TP2, TP12, TP13	150	202	243	1 L	5 L	C	40
Cacodylic acid	6.1	UN1572	II	6.1	IB8, IP2, IP4,T3, TP33	153	212	242	25 kg	100 kg	E	52
Cadmium compounds	6.1	UN2570	I	6.1	IB7, IP1, T6, TP33	None	211	242	5 kg	50 kg	A	
			II	6.1	IB8, IP2, IP4, T3, TP33	153	212	242	25 kg	100 kg	A	
			III	6.1	IB8, IP3, T1, TP33	153	213	240	100 kg	200 kg	A	
Caesium hydroxide	8	UN2682	II	8	IB8, IP2, IP4, T3, TP33	154	212	240	15 kg	50 kg	A	29
Caesium hydroxide solution	8	UN2681	II	8	B2, IB2, T7, TP2	154	202	242	1 L	30 L	A	29
			III	8	IB3, T4, TP1	154	203	241	5 L	60 L	A	29
Calcium	4.3	UN1401	II	4.3	IB7, IP2, T3, TP33	151	212	241	15 kg	50 kg	E	52
Calcium arsenate	6.1	UN1573	II	6.1	IB8, IP2, IP4, T3, TP33	152	212	242	25 kg	100 kg	A	
Calcium arsenate and calcium arsenite, mixtures, solid	6.1	UN1574	II	6.1	IB8, IP2, IP4, T3, TP33	152	212	242	25 kg	100 kg	A	
Calcium bisulfite solution, see Bisulfites, aqueous solutions, n.o.s.												
Calcium carbide	4.3	UN1402	I	4.3	A1, A8, B55, B59, IB4, IP1, N34, T9, TP7, TP33	None	211	242	Forbidden	15 kg	B	52
			II	4.3	A1, A8, B55, B59, IB7, IP2, N34, T3, TP33	151	212	241	15 kg	50 kg	B	52
Calcium chlorate	5.1	UN1452	II	5.1	A9, IB8, IP2, IP4, N34, T3, TP33	152	212	242	5 kg	25 kg	A	56, 58
Calcium chlorate aqueous solution	5.1	UN2429	II	5.1	A2, IB2, N41, T4, TP1	152	202	242	1 L	5 L	B	56, 58, 133

§ 172.101 HAZARDOUS MATERIALS TABLE—Continued

Symbols	Hazardous materials descriptions and proper shipping names	Hazard class or Division	Identification Numbers	PG	Label Codes	Special provisions (§172.102)	(8) Packaging (§173.***) Exceptions	Non-bulk	Bulk	(9) Quantity limitations Passenger aircraft/rail	Cargo aircraft only	(10) Vessel stowage Location	Other
(1)	(2)	(3)	(4)	(5)	(6)	(7)	(8A)	(8B)	(8C)	(9A)	(9B)	(10A)	(10B)
	.....	.....		III	5.1	A2, IB2, N41, T4, TP1	152	203	241	2.5 L	30 L	B	56, 68, 133
	Calcium chlorite	5.1	UN1453	II	5.1	A9, IB8, IP2, IP4, N34, T3, TP33	152	212	242	5 kg	25 kg	A	56, 58
	Calcium cyanamide *with more than 0.1 percent of calcium carbide*	4.3	UN1403	III	4.3	A1, A19, IB8, IP4, T1, TP33	151	213	241	25 kg	100 kg	A	52
	Calcium cyanide	6.1	UN1575	I	6.1	IB7, IP1, N79, N80, T6, TP33	None	211	242	5 kg	50 kg	A	40, 52
	Calcium dithionite *or* Calcium hydrosulfite	4.2	UN1923	II	4.2	A19, A20, IB6, IP2, T3, TP33	None	212	241	15 kg	50 kg	E	13
	Calcium hydride	4.3	UN1404	I	4.3	A19, N40	None	211	242	Forbidden	15 kg	E	52
	Calcium hydrosulfite, *see* Calcium dithionite	.....			.....		.....	.....	.....	.....	.....		.....
	Calcium hypochlorite, dry *or* Calcium hypochlorite mixtures dry *with more than 39 percent available chlorine (8.8 percent available oxygen).*	5.1	UN1748	II	5.1	165, 166, A7, A9, IB8, IP2, IP4, IP13, N34, W9	152	212	None	5 kg	25 kg	D	4, 25, 48, 52, 56, 58, 69, 142
	.....	.....		III	5.1	165, 171, A7, A9, IB8, IP4, IP13, N34, W9	152	213	240	25 kg	100 kg	D	4, 25, 48, 52, 56, 58, 69, 142
	Calcium hypochlorite, hydrated *or* Calcium hypochlorite, hydrated mixtures, *with not less than 5.5 percent but not more than 16 percent water.*	5.1	UN2880	II	5.1	165, 166, IB8, IP2, IP4, IP13, W9	152	212	240	5 kg	25 kg	D	4, 25, 48, 52, 56, 58, 69, 142
	.....	.....		III	5.1	165, 171, IB8, IP4, IP13, W9	152	213	240	25 kg	100 kg	D	4, 25, 48, 52, 56, 58, 69, 142
	Calcium hypochlorite mixtures, dry, *with more than 10 percent but not more than 39 percent available chlorine.*	5.1	UN2208	III	5.1	165, A1, A29, IB8, IP3, IP13, N34, W9	152	213	240	25 kg	100 kg	D	4, 25, 48, 52, 56, 58, 69, 142
	Calcium manganese silicon	4.3	UN2844	III	4.3	A1, A19, IB8, IP2, IP4, T1, TP33	151	213	241	25 kg	100 kg	A	52, 85, 103
	Calcium nitrate	5.1	UN1454	III	5.1	34, IB8, IP3, T1, TP33	152	213	240	25 kg	100 kg	A	.....
A	Calcium oxide	8	UN1910	III	8	IB8, IP3, T1, TP33	154	213	240	25 kg	100 kg	A	.....
	Calcium perchlorate	5.1	UN1455	II	5.1	IB6, IP2, T3, TP33	152	212	242	5 kg	25 kg	A	56, 58
	Calcium permanganate	5.1	UN1456	II	5.1	IB6, IP2, T3, TP33	152	212	242	5 kg	25 kg	D	56, 58, 138
	Calcium peroxide	5.1	UN1457	II	5.1	IB6, IP2, T3, TP33	152	212	242	5 kg	25 kg	A	13, 52, 56, 75
	Calcium phosphide	4.3	UN1360	I	4.3, 6.1.	A8, A19, N40	None	211	242	Forbidden	15 kg	E	40, 52, 85
	Calcium, pyrophoric *or* Calcium alloys, pyrophoric	4.2	UN1855	I	4.2		None	187	None	Forbidden	Forbidden	D	.....
	Calcium resinate	4.1	UN1313	III	4.1	A1, A19, IB6, T1, TP33	None	213	240	25 kg	100 kg	A	.....
	Calcium resinate, fused	4.1	UN1314	III	4.1	A1, A19, IB4, T1, TP33	None	213	240	25 kg	100 kg	A	.....
	Calcium selenate, see Selenates *or* Selenites	.....			.....		.....	.....	.....	.....	.....		.....
	Calcium silicide	4.3	UN1405	II	4.3	A19, IB7, IP2, T3, TP33	151	212	241	15 kg	50 kg	B	52, 85, 103
	.....	.....		III	4.3	A1, A19, IB8, IP4, T1, TP33	151	213	241	25 kg	100 kg	B	52, 85, 103
	Camphor oil	3	UN1130	III	3	B1, IB3, T2, TP1	150	203	242	60 L	220 L	A	.....
	Camphor, *synthetic*	4.1	UN2717	III	4.1	A1, IB8, IP3, T1, TP33	None	213	240	25 kg	100 kg	A	.....
	Cannon primers, see Primers, tubular	.....			.....		.....	.....	.....	.....	.....		.....
	Caproic acid	8	UN2829	III	8	IB3, T4, TP1	154	203	241	5 L	60 L	A	.....
	Caps, blasting, see Detonators, *etc*	.....			.....		.....	.....	.....	.....	.....		.....
	Carbamate pesticides, liquid, flammable, toxic, *flash point less than 23 degrees C*	3	UN2758	I	3, 6.1	T14, TP2, TP13, TP27	None	201	243	Forbidden	30 L	B	40

	.....	.....		II	3, 6.1	IB2, T11, TP2, TP13, TP27	150	202	243	1 L	60 L	B	40
	Carbamate pesticides, liquid, toxic	6.1	UN2992	I	6.1	T14, TP2, TP13, TP27	None	201	243	1 L	30 L	B	40
	.....	.....		II	6.1	IB2, T11, TP2, TP13, TP27	153	202	243	5 L	60 L	B	40
	.....	.....		III	6.1	IB3, T7, TP2, TP28	153	203	241	60 L	220 L	A	40
	Carbamate pesticides, liquid, toxic, flammable, *flash point not less than 23 degrees C*	6.1	UN2991	I	6.1, 3	T14, TP2, TP13, TP27	None	201	243	1 L	30 L	B	40
	.....	.....		II	6.1, 3	IB2, T11, TP2, TP13, TP27	153	202	243	5 L	60 L	B	40
	.....	.....		III	6.1, 3	B1, IB3, T7, TP2, TP28	153	203	242	60 L	220 L	A	40
	Carbamate pesticides, solid, toxic	6.1	UN2757	I	6.1	IB7, IP1, T6, TP33	None	211	242	5 kg	50 kg	A	40
	.....	.....		II	6.1	IB8, IP2, IP4, T3, TP33	153	212	242	25 kg	100 kg	A	40
	.....	.....		III	6.1	IB8, IP3, T1, TP33	153	213	240	100 kg	200 kg	A	40
	Carbolic acid, see Phenol, solid *or* Phenol, molten	.....			.....		.....	.....	.....	.....	.....		.....
	Carbolic acid solutions, see Phenol solutions	.....			.....		.....	.....	.....	.....	.....		.....
I	Carbon, activated	4.2	UN1362	III	4.2	IB8, IP3, T1, TP33	None	213	241	0.5 kg	0.5 kg	A	12
I	Carbon, *animal or vegetable origin*	4.2	UN1361	II	4.2	IB6, T3, TP33	None	212	242	Forbidden	Forbidden	A	12
	.....	.....		III	4.2	IB8, IP3, T1, TP33	None	213	241	Forbidden	Forbidden	A	12
	Carbon bisulfide, see Carbon disulfide	.....			.....		.....	.....	.....	.....	.....		.....
	Carbon dioxide	2.2	UN1013	.....	2.2		306	302, 304.	302, 314, 315.	75 kg	150 kg	A	.....
	Carbon dioxide and nitrous oxide mixtures	2.2	UN1015	.....	2.2		306	None	314, 315.	75 kg	150 kg	A	.....
	Carbon dioxide and oxygen mixtures, compressed	2.2	UN1014	.....	2.2, 5.1.	77, A14	306	304	314, 315.	75 kg	150 kg	A	.....
	Carbon dioxide, refrigerated liquid	2.2	UN2187	.....	2.2	T75, TP5	306	304	314, 315.	50 kg	500 kg	B	.....
A W	Carbon dioxide, solid *or* Dry ice	9	UN1845	III	None		217	217	240	200 kg	200 kg	C	40
	Carbon disulfide	3	UN1131	I	3, 6.1	B16, T14, TP2, TP7, TP13	None	201	243	Forbidden	Forbidden	D	18, 40, 115
	Carbon monoxide, compressed	2.3	UN1016	.....	2.3, 2.1.	4	None	302	314, 315.	Forbidden	25 kg	D	40
	Carbon monoxide and hydrogen mixture, compressed	2.3	UN2600	.....	2.3, 2.1.	6	None	302	302	Forbidden	Forbidden	D	40, 57
D	Carbon monoxide, refrigerated liquid *(cryogenic liquid)*	2.3	NA9202	.....	2.3, 2.1.	4, T75, TP5	None	316	318	Forbidden	Forbidden	D	.....
	Carbon tetrabromide	6.1	UN2516	III	6.1	IB8, IP3, T1, TP33	153	213	240	100 kg	200 kg	A	25
	Carbon tetrachloride	6.1	UN1846	II	6.1	IB2, N36, T7, TP2	153	202	243	5 L	60 L	A	40
	Carbonyl chloride, see Phosgene	.....			.....		.....	.....	.....	.....	.....		.....
	Carbonyl fluoride	2.3	UN2417	.....	2.3, 8	2	None	302	None	Forbidden	Forbidden	D	40
	Carbonyl sulfide	2.3	UN2204	.....	2.3, 2.1.	3, B14	None	304	314, 315.	Forbidden	Forbidden	D	40
	Cartridge cases, empty primed, see Cases, cartridge, empty, with primer	.....			.....		.....	.....	.....	.....	.....		.....
	Cartridges, actuating, for aircraft ejector seat catapult, fire extinguisher, canopy removal or apparatus, see Cartridges, power device.	.....			.....		.....	.....	.....	.....	.....		.....
	Cartridges, explosive, see Charges, demolition	.....			.....		.....	.....	.....	.....	.....		.....
	Cartridges, flash	1.1G	UN0049	II	1.1G ..		None	62	None	Forbidden	Forbidden	07	.....
	Cartridges, flash	1.3G	UN0050	II	1.3G ..		None	62	None	Forbidden	75 kg	07	.....
	Cartridges for weapons, blank	1.1C	UN0326	II	1.1C ..		None	62	None	Forbidden	Forbidden	07	.....
	Cartridges for weapons, blank	1.2C	UN0413	II	1.2C ..		None	62	None	Forbidden	Forbidden	07	.....
	Cartridges for weapons, blank *or* Cartridges, small arms, blank	1.4S	UN0014	II	None		63	62	None	25 kg	100 kg	05	.....
	Cartridges for weapons, blank *or* Cartridges, small arms, blank	1.3C	UN0327	II	1.3C ..		None	62	None	Forbidden	Forbidden	07	.....
	Cartridges for weapons, blank *or* Cartridges, small arms, blank	1.4C	UN0338	II	1.4C ..		None	62	None	Forbidden	75 kg	06	.....
	Cartridges for weapons, inert projectile	1.2C	UN0328	II	1.2C ..		None	62	None	Forbidden	Forbidden	03	.....
	Cartridges for weapons, inert projectile *or* Cartridges, small arms	1.4S	UN0012	II	None		63	62	None	25 kg	100 kg	05	.....
	Cartridges for weapons, inert projectile *or* Cartridges, small arms	1.4C	UN0339	II	1.4C ..		None	62	None	Forbidden	75 kg	06	.....
	Cartridges for weapons, inert projectile *or* Cartridges, small arms	1.3C	UN0417	II	1.3C ..		None	62	None	Forbidden	Forbidden	06	.....
	Cartridges for weapons, *with bursting charge*	1.1F	UN0005	II	1.1F ...		None	62	None	Forbidden	Forbidden	08	.....
	Cartridges for weapons, *with bursting charge*	1.1E	UN0006	II	1.1E ...		None	62	None	Forbidden	Forbidden	03	.....
	Cartridges for weapons, *with bursting charge*	1.2F	UN0007	II	1.2F ...		None	62	None	Forbidden	Forbidden	08	.....
	Cartridges for weapons, *with bursting charge*	1.2E	UN0321	II	1.2E ...		None	62	None	Forbidden	Forbidden	03	.....
	Cartridges for weapons, *with bursting charge*	1.4F	UN0348	II	1.4F ...		None	62	None	Forbidden	Forbidden	08	.....
	Cartridges for weapons, *with bursting charge*	1.4E	UN0412	II	1.4E ...		None	62	None	Forbidden	75 kg	02	.....

§ 172.101 HAZARDOUS MATERIALS TABLE—Continued

Symbols	Hazardous materials descriptions and proper shipping names	Hazard class or Division	Identification Numbers	PG	Label Codes	Special provisions (§172.102)	(8) Packaging (§173.***) Exceptions	Non-bulk	Bulk	(9) Quantity limitations Passenger aircraft/rail	Cargo aircraft only	(10) Vessel stowage Location	Other
(1)	(2)	(3)	(4)	(5)	(6)	(7)	(8A)	(8B)	(8C)	(9A)	(9B)	(10A)	(10B)
	Cartridges, oil well	1.3C	UN0277	II	1.3C		None	62	None	Forbidden	Forbidden	07	
	Cartridges, oil well	1.4C	UN0278	II	1.4C		None	62	None	Forbidden	75 kg	06	
	Cartridges, power device	1.3C	UN0275	II	1.3C		None	62	None	Forbidden	75 kg	07	
	Cartridges, power device	1.4C	UN0276	II	1.4C	110	None	62	None	Forbidden	75 kg	06	
	Cartridges, power device	1.4S	UN0323	II	1.4S	110	63	62	None	25 kg	100 kg	05	
	Cartridges, power device	1.2C	UN0381	II	1.2C		None	62	None	Forbidden	Forbidden	07	
	Cartridges, safety, blank, see Cartridges for weapons, blank *(UN 0014)*												
	Cartridges, safety, see Cartridges for weapons, *other than blank or* Cartridges, power device *(UN 0323).*												
	Cartridges, signal	1.3G	UN0054	II	1.3G		None	62	None	Forbidden	75 kg	07	
	Cartridges, signal	1.4G	UN0312	II	1.4G		None	62	None	Forbidden	75 kg	06	
	Cartridges, signal	1.4S	UN0405	II	1.4S		None	62	None	25 kg	100 kg	05	
D	Cartridges, small arms	ORM-D			None		63	None	None	30 kg gross	30 kg gross	A	
D	Cartridges power device *(used to project fastening devices)*	ORM-D			None		63	None	None	30 kg gross	30 kg gross	A	
	Cartridges, sporting, see Cartridges for weapons, *other than blank*												
	Cartridges, starter, jet engine, see Cartridges, power device												
	Cases, cartridge, empty with primer	1.4S	UN0055	II	1.4S	50	None	62	None	25 kg	100 kg	05	
	Cases, cartridges, empty with primer	1.4C	UN0379	II	1.4C	50	None	62	None	Forbidden	75 kg	06	
	Cases, combustible, empty, without primer	1.4C	UN0446	II	1.4C		None	62	None	Forbidden	75 kg	06	
	Cases, combustible, empty, without primer	1.3C	UN0447	II	1.3C		None	62	None	Forbidden	Forbidden	07	
	Casinghead gasoline see Gasoline												
A W	Castor beans *or* Castor meal *or* Castor pomace *or* Castor flake	9	UN2969	II	None	IB8, IP2, IP4, T3, TP33	155	204	240	No limit	No limit	E	34, 40
G	Caustic alkali liquids, n.o.s.	8	UN1719	II	8	B2, IB2, T11, TP2, TP27	154	202	242	1 L	30 L	A	29
				III	8	IB3, T7, TP1, TP28	154	203	241	5 L	60 L	A	29
	Caustic potash, see Potassium hydroxide *etc*												
	Caustic soda, (etc.) see Sodium hydroxide *etc*												
	Cells, containing sodium	4.3	UN3292	II	4.3		189	189	189	25 kg gross	No limit	A	
	Celluloid, *in block, rods, rolls, sheets, tubes, etc., except scrap*	4.1	UN2000	III	4.1		None	213	240	25 kg	100 kg	A	
	Celluloid, scrap	4.2	UN2002	III	4.2	IB8, IP3	None	213	241	Forbidden	Forbidden	D	
	Cement, see Adhesives *containing flammable liquid*												
	Cerium, *slabs, ingots, or rods*	4.1	UN1333	II	4.1	IB8, IP2, IP4, N34	None	212	240	15 kg	50 kg	A	74, 91
	Cerium, *turnings or gritty powder*	4.3	UN3078	II	4.3	A1, IB7, IP2, T3, TP33	151	212	242	15 kg	50 kg	E	52
	Cesium *or* Caesium	4.3	UN1407	I	4.3	A7, A19, IB4, IP1, N34, N40	None	211	242	Forbidden	15 kg	D	52
	Cesium nitrate *or* Caesium nitrate	5.1	UN1451	III	5.1	A1, A29, IB8, IP3, T1, TP33	152	213	240	25 kg	100 kg	A	
D	Charcoal *briquettes, shell, screenings, wood, etc.*	4.2	NA1361	III	4.2	IB8, T1, TP33	151	213	240	25 kg	100 kg	A	12
	Charges, bursting, plastics bonded	1.1D	UN0457	II	1.1D		None	62	None	Forbidden	Forbidden	07	
	Charges, bursting, plastics bonded	1.2D	UN0458	II	1.2D		None	62	None	Forbidden	Forbidden	07	
	Charges, bursting, plastics bonded	1.4D	UN0459	II	1.4D		None	62	None	Forbidden	75 kg	06	
	Charges, bursting, plastics bonded	1.4S	UN0460	II	1.4S		None	62	None	25 kg	100 kg	05	
	Charges, demolition	1.1D	UN0048	II	1.1D		None	62	None	Forbidden	Forbidden	03	
	Charges, depth	1.1D	UN0056	II	1.1D		None	62	None	Forbidden	Forbidden	03	
	Charges, expelling, explosive, for fire extinguishers, see Cartridges, power device												
	Charges, explosive, commercial *without detonator*	1.1D	UN0442	II	1.1D		None	62	None	Forbidden	Forbidden	07	
	Charges, explosive, commercial *without detonator*	1.2D	UN0443	II	1.2D		None	62	None	Forbidden	Forbidden	07	
	Charges, explosive, commercial *without detonator*	1.4D	UN0444	II	1.4D		None	62	None	Forbidden	75 kg	06	
	Charges, explosive, commercial *without detonator*	1.4S	UN0445	II	1.4S		None	62	None	25 kg	100 kg	05	
	Charges, propelling	1.1C	UN0271	II	1.1C		None	62	None	Forbidden	Forbidden	07	
	Charges, propelling	1.3C	UN0272	II	1.3C		None	62	None	Forbidden	Forbidden	07	
	Charges, propelling	1.2C	UN0415	II	1.2C		None	62	None	Forbidden	Forbidden	07	
	Charges, propelling	1.4C	UN0491	II	1.4C		None	62	None	Forbidden	75 kg	06	
	Charges, propelling, for cannon	1.3C	UN0242	II	1.3C		None	62	None	Forbidden	Forbidden	10	
	Charges, propelling, for cannon	1.1C	UN0279	II	1.1C		None	62	None	Forbidden	Forbidden	10	
	Charges, propelling, for cannon	1.2C	UN0414	II	1.2C		None	62	None	Forbidden	Forbidden	10	
	Charges, shaped, flexible, linear	1.4D	UN0237	II	1.4D		None	62	None	Forbidden	75 kg	06	
	Charges, shaped, flexible, linear	1.1D	UN0288	II	1.1D	101	None	62	None	Forbidden	Forbidden	07	
	Charges, shaped, *without detonator*	1.1D	UN0059	II	1.1D		None	62	None	Forbidden	Forbidden	07	
	Charges, shaped, *without detonator*	1.2D	UN0439	II	1.2D		None	62	None	Forbidden	Forbidden	07	
	Charges, shaped, *without detonator*	1.4D	UN0440	II	1.4D		None	62	None	Forbidden	75 kg	06	

	Charges, shaped, *without detonator*	1.4S	UN0441	II	1.4S		None	62	None	25 kg	100 kg	05	
	Charges, supplementary explosive	1.1D	UN0060	II	1.1D		None	62	None	Forbidden	Forbidden	10	
D	Chemical kit	8	NA1760	II	8		154	161	None	1 L	30 L	B	40
	Chemical kits	9	UN3316		9	15	161	161	None	10 kg	10 kg	A	
	Chloral, anhydrous, stabilized	6.1	UN2075	II	6.1	IB2, T7, TP2	153	202	243	5 L	60 L	D	40
	Chlorate and borate mixtures	5.1	UN1458	II	5.1	A9, IB8, IP2, IP4, N34, T3, TP33	152	212	240	5 kg	25 kg	A	56, 58
				III	5.1	A9, IB8, IP3, N34, T1, TP33	152	213	240	25 kg	100 kg	A	56, 58
	Chlorate and magnesium chloride mixture, solid	5.1	UN1459	II	5.1	A9, IB8, IP2, IP4, N34, T3, TP33	152	212	240	5 kg	25 kg	A	56, 58
	Chlorate and magnesium chloride mixture solution	5.1	UN3407	II	5.1	A9, IB2, N34, T4, TP1	152	202	242	1 L	5 L	A	56, 58, 133
				III	5.1	A9, IB2, N34, T4, TP1	152	203	241	2.5 L	30 L	A	56, 58, 133
	Chlorate and magnesium chloride mixture, solid	5.1	UN1459	III	5.1	A9, IB8, IP3, N34, T1, TP33	152	213	240	25 kg	100 kg	A	56, 58
	Chlorate of potash, see Potassium chlorate												
	Chlorate of soda, see Sodium chlorate												
	Chlorates, inorganic, aqueous solution, n.o.s.	5.1	UN3210	II	5.1	IB2, T4, TP1	152	202	242	1 L	5 L	B	56, 58, 133
				III	5.1	IB2, T4, TP1	152	203	241	2.5 L	30 L	B	56, 58, 133
	Chlorates, inorganic, n.o.s.	5.1	UN1461	II	5.1	A9, IB6, IP2, N34, T3, TP33	152	212	242	5 kg	25 kg	A	56, 58
	Chloric acid aqueous solution, *with not more than 10 percent chloric acid*	5.1	UN2626	II	5.1	IB2, T4, TP1	None	229	None	Forbidden	Forbidden	D	56, 58
	Chloride of phosphorus, see Phosphorus trichloride												
	Chloride of sulfur, see Sulfur chloride												
	Chlorinated lime, see Calcium hypochlorite mixtures, *etc*												
	Chlorine	2.3	UN1017		2.3, 8	2, B9, B14, T50, TP19	None	304	314, 315.	Forbidden	Forbidden	D	40, 51, 55, 62, 68, 89, 90
	Chlorine azide	Forbidden											
D	Chlorine dioxide, hydrate, frozen	5.1	NA9191	II	5.1, 6.1.		None	229	None	Forbidden	Forbidden	E	
	Chlorine dioxide (not hydrate)	Forbidden											
	Chlorine pentafluoride	2.3	UN2548		2.3, 5.1, 8.	1, B7, B9, B14	None	304	314	Forbidden	Forbidden	D	40, 89, 90
	Chlorine trifluoride	2.3	UN1749		2.3, 5.1, 8.	2, B7, B9, B14	None	304	314	Forbidden	Forbidden	D	40, 89, 90
	Chlorite solution	8	UN1908	II	8	A3, A6, A7, B2, IB2, N34, T7, TP2, TP24	154	202	242	1 L	30 L	B	26, 44, 89, 100, 141
				III	8	A3, A6, A7, B2, IB3, N34, T4, TP2, TP24	154	203	241	5 L	60 L	B	26, 44, 89, 100, 141
	Chlorites, inorganic, n.o.s.	5.1	UN1462	II	5.1	A7, IB6, IP2, N34, T3, TP33	152	212	242	5 kg	25 kg	A	56, 58
	1-Chloro-1,1-difluoroethane *or* Refrigerant gas R 142b	2.1	UN2517		2.1	T50	306	304	314, 315.	Forbidden	150 kg	B	40
	3-Chloro-4-methylphenyl isocyanate, liquid	6.1	UN2236	II	6.1	IB2	153	202	243	5 L	60 L	B	40
	3-Chloro-4-methylphenyl isocyanate, solid	6.1	UN3428	II	6.1	IB8, IP2, IP4, T3, TP33	153	212	242	25 kg	100 kg	B	40
	1-Chloro-1,2,2,2-tetrafluoroethane*or* Refrigerant gas R 124	2.2	UN1021		2.2	T50	306	304	314, 315.	75 kg	150 kg	A	
	4-Chloro-o-toluidine hydrochloride, solid	6.1	UN1579	III	6.1	IB8, IP3, T1, TP33	153	213	240	100 kg	200 kg	A	
	4-Chloro-o-toluidine hydrochloride, solution	6.1	UN3410	III	6.1	IB3, T4, TP1	153	203	241	60 L	220 L	A	
	1-Chloro-2,2,2-trifluoroethane *or* Refrigerant gas R 133a	2.2	UN1983		2.2	T50	306	304	314, 315.	75 kg	150 kg	A	
	Chloroacetic acid, molten	6.1	UN3250	II	6.1, 8	IB1, T7, TP3, TP28	None	202	243	Forbidden	Forbidden	C	40
	Chloroacetic acid, solid	6.1	UN1751	II	6.1, 8	A3, A7, IB8, IP4, N34, T3, TP33	153	212	242	15 kg	50 kg	A	40
	Chloroacetic acid, solution	6.1	UN1750	II	6.1, 8	A7, IB2, N34, T7, TP2	153	202	243	1 L	30 L	C	40

§ 172.101 HAZARDOUS MATERIALS TABLE—Continued

Symbols	Hazardous materials descriptions and proper shipping names	Hazard class or Division	Identification Numbers	PG	Label Codes	Special provisions (§172.102)	(8) Packaging (§173.***) Exceptions	Non-bulk	Bulk	(9) Quantity limitations Passenger aircraft/rail	Cargo aircraft only	(10) Vessel stowage Location	Other
(1)	(2)	(3)	(4)	(5)	(6)	(7)	(8A)	(8B)	(8C)	(9A)	(9B)	(10A)	(10B)
	Chloroacetone, stabilized	6.1	UN1695	I	6.1, 3, 8.	2, B9, B14, B32, B74, N12, N32, N34, T20, TP2, TP13, TP38, TP45	None	227	244	Forbidden	Forbidden	D	21, 40, 100
	Chloroacetone (unstabilized)	Forbidden											
+	Chloroacetonitrile	6.1	UN2668	II	6.1, 3	2, B9, B14, B32, B74, IB99, T20, TP2, TP38, TP45	None	227	244	Forbidden	Forbidden	A	12, 40, 52
	Chloroacetophenone, liquid *CN*	6.1	UN3416	II	6.1	A3, IB2, N12, N32, N33, T7, TP2, TP13	None	202	243	Forbidden	60 L	D	12, 40
	Chloroacetophenone, solid (CN)	6.1	UN1697	II	6.1	A3, IB8, IP2, IP4, N12, N32, N33, N34, T3, TP33 TP2, TP13	None	212	None	Forbidden	100 kg	D	12, 40
	Chloroacetyl chloride	6.1	UN1752	I	6.1, 8	2, B3, B8, B9, B14, B32, B74, B77, N34, N43, T20, TP2, TP13, TP38, TP45	None	227	244	Forbidden	Forbidden	D	40
	Chloroanilines, liquid	6.1	UN2019	II	6.1	IB2, T7, TP2	153	202	243	5 L	60 L	A	52
	Chloroanilines, solid	6.1	UN2018	II	6.1	IB8, IP2, IP4, T3, TP33	153	212	242	25 kg	100 kg	A	
	Chloroanisidines	6.1	UN2233	III	6.1	IB8, IP3, T1, TP33	153	213	240	100 kg	200 kg	A	
	Chlorobenzene	3	UN1134	III	3	B1, IB3, T2, TP1	150	203	242	60 L	220 L	A	
	Chlorobenzol, see Chlorobenzene												
	Chlorobenzotrifluorides	3	UN2234	III	3	B1, IB3, T2, TP1	150	203	242	60 L	220 L	A	40
	Chlorobenzyl chlorides, liquid	6.1	UN2235	III	6.1	IB3, T4, TP1	153	203	241	60 L	220 L	A	
	Chlorobenzyl chlorides, solid	6.1	UN3427	III	6.1	IB8, IP3, T1, TP33	153	213	240	100 kg	200 kg	A	
	Chlorobutanes	3	UN1127	II	3	IB2, T4, TP1	150	202	242	5 L	60 L	B	
	Chlorocresols solution	6.1	UN2669	II	6.1	IB2, T7, TP2	153	202	243	5 L	60 L	A	12
				III	6.1	IB3, T7, TP2	153	203	241	60 L	220 L	A	12
	Chlorocresols, solid	6.1	UN3437	II	6.1	IB8, IP2, IP4, T3, TP33	153	212	242	25 kg	100 kg	A	12
	Chlorodifluorobromomethane *or* Refrigerant gas R 12B1	2.2	UN1974		2.2	T50	306	304	314, 315.	75 kg	150 kg	A	
	Chlorodifluoromethane and chloropentafluoroethane mixture *or* Refrigerant gas R 502 *with fixed boiling point, with approximately 49 percent chlorodifluoromethane.*	2.2	UN1973		2.2	T50	306	304	314, 315.	75 kg	150 kg	A	
	Chlorodifluoromethane *or* Refrigerant gas R 22	2.2	UN1018		2.2	T50	306	304	314, 315.	75 kg	150 kg	A	
+	Chlorodinitrobenzenes, liquid.	6.1	UN1577	II	6.1	IB2, T7, TP2	153	202	243	5 L	60 L	B	91
	Chlorodinitro-benzenes, solid	6.1	UN3441	II	6.1	IB8, IP2, IP4, T3, TP33	153	212	242	25 kg	100 kg	A	91
	2-Chloroethanal	6.1	UN2232	I	6.1	2, B9, B14, B32, B74, T20, TP2, TP13, TP38, TP45	None	227	244	Forbidden	Forbidden	D	40
	Chloroform	6.1	UN1888	III	6.1	IB3, N36, T7, TP2	153	203	241	60 L	220 L	A	40
G	Chloroformates, toxic, corrosive, flammable, n.o.s.	6.1	UN2742	II	6.1, 8, 3.	5, IB1, T7, TP2	153	202	243	1 L	30 L	A	12, 13, 21, 25, 40, 100
G	Chloroformates, toxic, corrosive, n.o.s.	6.1	UN3277	II	6.1, 8	IB2, T8, TP2, TP13, TP28	153	202	243	1 L	30 L	A	12, 13, 25, 40
	Chloromethyl chloroformate	6.1	UN2745	II	6.1, 8	IB2, T7, TP2, TP13	153	202	243	1 L	30 L	A	12, 13, 21, 25, 40, 100
	Chloromethyl ethyl ether	3	UN2354	II	3, 6.1	IB2, T7, TP1, TP13	150	202	243	1 L	60 L	E	40
	Chloronitroanilines	6.1	UN2237	III	6.1	IB8, IP3, T1, TP33	153	213	240	100 kg	200 kg	A	
+	Chloronitrobenzene, liquid *ortho*	6.1	UN3409	II	6.1	IB2, T7, TP2	153	202	243	5 L	60 L	A	

+	Chloronitrobenzenes, solid *meta or para*	6.1	UN1578	II	6.1	IB8, IP2, IP4, T3, TP33	153	212	242	25 kg	100 kg	A	
	Chloronitrotoluenes, liquid	6.1	UN2433	III	6.1	IB3, T4, TP1	153	203	241	60 L	220 L	A	44, 89, 100, 141
	Chloronitrotoluenes, solid	6.1	UN3457	III	6.1	IB8, IP3,T1, TP33	153	213	240	25 kg	200 kg	A	
	Chloropentafluoroethane *or* Refrigerant gas R 115	2.2	UN1020		2.2	T50	306	304	314, 315.	75 kg	150 kg	A	
	Chlorophenolates, liquid *or* Phenolates, liquid	8	UN2904	III	8	IB3	154	203	241	5 L	60 L	A	
	Chlorophenolates, solid *or* Phenolates, solid	8	UN2905	III	8	IB8, IP3, T1, TP33	154	213	240	25 kg	100 kg	A	
	Chlorophenols, liquid	6.1	UN2021	III	6.1	IB3, T4, TP1	153	203	241	60 L	220 L	A	
	Chlorophenols, solid	6.1	UN2020	III	6.1	IB8, IP3, T1, TP1, TP33	153	213	240	100 kg	200 kg	A	
	Chlorophenyltrichlorosilane	8	UN1753	II	8	A7, B2, B6, IB2, N34, T7, TP2	None	202	242	Forbidden	30 L	C	40
+	Chloropicrin	6.1	UN1580	I	6.1	2, B7, B9, B14, B32, B46, B74, T20, TP2, TP13, TP38, TP45	None	227	244	Forbidden	Forbidden	D	40
	Chloropicrin and methyl bromide mixtures	2.3	UN1581		2.3	2, B9, B14, T50	None	193	314, 315.	Forbidden	Forbidden	D	25, 40
	Chloropicrin and methyl chloride mixtures	2.3	UN1582		2.3	2, T50	None	193	245	Forbidden	Forbidden	D	25, 40
	Chloropicrin mixture, flammable (pressure not exceeding 14.7 psia at 115 degrees F flash point below 100 degrees F) see Toxic liquids, flammable, *etc.*												
	Chloropicrin mixtures, n.o.s.	6.1	UN1583	I	6.1	5	None	201	243	Forbidden	Forbidden	C	40
				II	6.1	IB2	153	202	243	Forbidden	Forbidden	C	40
				III	6.1	IB3	153	203	241	Forbidden	Forbidden	C	40
D	Chloropivaloyl chloride	6.1	NA9263	I	6.1, 8	2, B9, B14, B32, B74, T20, TP4, TP12, TP13, TP38, TP45	None	227	244	Forbidden	Forbidden	B	40
	Chloroplatinic acid, solid	8	UN2507	III	8	IB8, IP3, T1, TP33	154	213	240	25 kg	100 kg	A	
	Chloroprene, stabilized	3	UN1991	I	3, 6.1	B57, T14, TP2, TP13	None	201	243	Forbidden	30 L	D	40
	Chloroprene, uninhibited	Forbidden											
	1-Chloropropane	3	UN1278	II	3	IB2, IP8, N34, T7, TP2	None	202	242	Forbidden	60 L	E	
	2-Chloropropane	3	UN2356	I	3	N36, T11, TP2, TP13	150	201	243	1 L	30 L	E	
	3-Chloropropanol-1	6.1	UN2849	III	6.1	IB3, T4, TP1	153	203	241	60 L	220 L	A	
	2-Chloropropene	3	UN2456	I	3	A3, N36, T11, TP2	150	201	243	1 L	30 L	E	
	2-Chloropropionic acid	8	UN2511	III	8	IB3, T4, TP2	154	203	241	5 L	60 L	A	8
	2-Chloropyridine	6.1	UN2822	II	6.1	IB2, T7, TP2	153	202	243	5 L	60 L	A	40
	Chlorosilanes, corrosive, flammable, n.o.s.	8	UN2986	II	8, 3	IB2, T11, TP2, TP27	None	202	243	1 L	30 L	C	40
	Chlorosilanes, corrosive, n.o.s.	8	UN2987	II	8	B2, IB2, T14, TP2, TP27	154	202	242	1 L	30 L	C	40
	Chlorosilanes, flammable, corrosive, n.o.s.	3	UN2985	II	3, 8	IB1, T11, TP2, TP13, TP27	150	201	243	1 L	5 L	B	40
	Chlorosilanes, toxic, corrosive, n.o.s.	6.1	UN3361	II	6.1, 8	IB1, T11, TP2, TP13	153	202	243	1 L	30 L	C	40
	Chlorosilanes, toxic, corrosive, flammable, n.o.s.	6.1	UN3362	II	6.1, 3, 8.	IB1, T11, TP2, TP13	153	202	243	1 L	30 L	C	40, 125
	Chlorosilanes, water-reactive, flammable, corrosive, n.o.s.	4.3	UN2988	I	4.3, 3, 8.	A2, T10, TP2, TP7, TP13	None	201	244	Forbidden	1 L	D	21, 28, 40, 49, 100
+	Chlorosulfonic acid *(with or without sulfur trioxide)*	8	UN1754	I	8, 6.1	2, B9, B10, B14, B32, B74, T20, TP2, TP12, TP38, TP45	None	227	244	Forbidden	Forbidden	C	40
	Chlorotoluenes	3	UN2238	III	3	B1, IB3, T2, TP1	150	203	242	60 L	220 L	A	
	Chlorotoluidines, liquid	6.1	UN3429	III	6.1	IB3, T4, TP1	153	203	241	60 L	220 L	A	
	Chlorotoluidines, solid	6.1	UN2239	III	6.1	IB8, IP3, T1, TP33	153	213	240	100 kg	200 kg	A	
	Chlorotrifluoromethane and trifluoromethane azeotropic mixture *or* Refrigerant gas R 503 *with approximately 60 percent chlorotrifluoromethane.*	2.2	UN2599		2.2		306	304	314, 315.	75 kg	150 kg	A	
	Chlorotrifluoromethane *or* Refrigerant gas R 13	2.2	UN1022		2.2		306	304	314, 315.	75 kg	150 kg	A	

§ 172.101 HAZARDOUS MATERIALS TABLE—Continued

Symbols	Hazardous materials descriptions and proper shipping names	Hazard class or Division	Identification Numbers	PG	Label Codes	Special provisions (§172.102)	(8) Packaging (§173.***) Exceptions	Non-bulk	Bulk	(9) Quantity limitations Passenger aircraft/rail	Cargo aircraft only	(10) Vessel stowage Location	Other
(1)	(2)	(3)	(4)	(5)	(6)	(7)	(8A)	(8B)	(8C)	(9A)	(9B)	(10A)	(10B)
	Chromic acid solution	8	UN1755	II	8	B2, IB2, T8, TP2, TP12	154	202	242	1 L	30 L	C	40, 44, 89, 100, 141
				III	8	IB3, T4, TP1, TP12	154	203	241	5 L	60 L	C	40, 44, 89, 100, 141
	Chromic anhydride, see Chromium trioxide, anhydrous												
	Chromic fluoride, solid	8	UN1756	II	8	IB8, IP2, IP4, T3, TP33	154	212	240	15 kg	50 kg	A	52
	Chromic fluoride, solution	8	UN1757	II	8	B2, IB2, T7, TP2	154	202	242	1 L	30 L	A	
				III	8	IB3, T4, TP1	154	203	241	5 L	60 L	A	
	Chromium nitrate	5.1	UN2720	III	5.1	A1, A29, IB8, IP3, T1, TP33	152	213	240	25 kg	100 kg	A	
	Chromium oxychloride	8	UN1758	I	8	A3, A6, A7, B10, N34, T10, TP2, TP12	None	201	243	0.5 L	2.5 L	C	40, 66, 74, 89, 90
	Chromium trioxide, anhydrous	5.1	UN1463	II	5.1, 8	IB8, IP4, T3, TP33	None	212	242	5 kg	25 kg	A	
	Chromosulfuric acid	8	UN2240	I	8	A3, A6, A7, B4, B6, N34, T10, TP2, TP12, TP13	None	201	243	0.5 L	2.5 L	B	40, 66, 74, 89, 90
	Chromyl chloride, see Chromium oxychloride												
	Cigar and cigarette lighters, charged with fuel, see Lighters *or* Lighter refills *containing flammable gas.*.												
	Coal briquettes, hot	Forbidden											
	Coal gas, compressed	2.3	UN1023		2.3, 2.1.	3	None	302	314, 315.	Forbidden	Forbidden	D	40
	Coal tar distillates, flammable	3	UN1136	II	3	IB2, T4, TP1	150	202	242	5 L	60 L	B	
				III	3	B1, IB3, T4, TP1, TP29	150	203	242	60 L	220 L	A	
	Coal tar dye, corrosive, liquid, n.o.s, see Dyes, liquid *or* solid, n.o.s. *or* Dye intermediates, liquid *or* solid, corrosive, n.o.s..												
	Coating solution (*includes surface treatments or coatings used for industrial or other purposes such as vehicle undercoating, drum or barrel lining*).	3	UN1139	I	3	T11, TP1, TP8, TP27	150	201	243	1 L	30 L	E	
				II	3	149, IB2, T4, TP1, TP8	150	202	242	5 L	60 L	B	
				III	3	B1, IB3, T2, TP1	150	203	242	60 L	220 L	A	
	Cobalt naphthenates, powder	4.1	UN2001	III	4.1	A19, IB8, IP3, T1, TP33	151	213	240	25 kg	100 kg	A	
	Cobalt resinate, precipitated	4.1	UN1318	III	4.1	A1, A19, IB6, T1, TP33	151	213	240	25 kg	100 kg	A	
	Coke, hot	Forbidden											
	Collodion, see Nitrocellulose *etc*												
D G	Combustible liquid, n.o.s.	Comb liq	NA1993	III	None	IB3, T1, T4, TP1	150	203	241	60 L	220 L	A	
G	Components, explosive train, n.o.s.	1.2B	UN0382	II	1.2B	101	None	62	None	Forbidden	Forbidden	11	
G	Components, explosive train, n.o.s.	1.4B	UN0383	II	1.4B	101	None	62	None	Forbidden	75 kg	06	
G	Components, explosive train, n.o.s.	1.4S	UN0384	II	1.4S	101	None	62	None	25 kg	100 kg	05	
G	Components, explosive train, n.o.s.	1.1B	UN0461	II	1.1B	101	None	62	None	Forbidden	Forbidden	11	
	Composition B, see Hexolite, *etc*												
D G	Compounds, cleaning liquid	8	NA1760	I	8	A7, B10, T14, TP2, TP27	None	201	243	0.5 L	2.5 L	B	40
				II	8	B2, IB2, N37, T11, TP2, TP27	154	202	242	1 L	30 L	B	40
				III	8	IB3, N37, T7, TP1, TP28	154	203	241	5 L	60 L	A	40
D G	Compounds, cleaning liquid	3	NA1993	I	3	T11, TP1	150	201	243	1 L	30 L	E	
				II	3	IB2, T7, TP1, TP8, TP28	150	202	242	5 L	60 L	B	
				III	3	B1, B52, IB3, T4, TP1, TP29	150	203	242	60 L	220 L	A	
D G	Compounds, tree killing, liquid *or* Compounds, weed killing, liquid	8	NA1760	I	8	A7, B10, T14, TP2, TP27	None	201	243	0.5 L	2.5 L	B	40

	.....	.....		II	8	B2, IB2, N37, T11, TP2, TP27	154	202	242	1 L	30 L	B	40
	.....	.....		III	8	IB3, N37, T7, TP1, TP28	154	203	241	5 L	60 L	A	40
D G	Compounds, tree killing, liquid *or* Compounds, weed killing, liquid	3	NA1993	I	3	T11, TP1	150	201	243	1 L	30 L	E	.....
	.....	.....		II	3	IB2, T7, TP1, TP8, TP28	150	202	242	5 L	60 L	B	.....
	.....	.....		III	3	B1, B52, IB3, T4, TP1, TP29	150	203	242	60 L	220 L	A	.....
D G	Compounds, tree killing, liquid *or* Compounds, weed killing, liquid	6.1	NA2810	I	6.1	T14, TP2, TP13, TP27	None	201	243	1 L	30 L	B	40
	.....	.....		II	6.1	IB2, T11, TP2, TP27	153	202	243	5 L	60 L	B	40
	.....	.....		III	6.1	IB3, T7, TP1, TP28	153	203	241	60 L	220 L	A	40
G	Compressed gas, flammable, n.o.s.	2.1	UN1954	.....	2.1		306	302, 305.	314, 315.	Forbidden	150 kg	D	40
G	Compressed gas, n.o.s.	2.2	UN1956	.....	2.2		306, 307.	302, 305.	314, 315.	75 kg	150 kg	A	.....
G	Compressed gas, oxidizing, n.o.s.	2.2	UN3156	.....	2.2, 5.1.	A14	306	302	314, 315.	75 kg	150 kg	D	.....
G I	Compressed gas, toxic, corrosive, n.o.s. *Inhalation Hazard Zone A*	2.3	UN3304	.....	2.3, 8	1	None	192	245	Forbidden	Forbidden	D	40
G I	Compressed gas, toxic, corrosive, n.o.s. *Inhalation Hazard Zone B*	2.3	UN3304	.....	2.3, 8	2, B9, B14	None	302, 305.	314, 315.	Forbidden	Forbidden	D	40
G I	Compressed gas, toxic, corrosive, n.o.s. *Inhalation Hazard Zone C*	2.3	UN3304	.....	2.3, 8	3, B14	None	302, 305.	314, 315.	Forbidden	Forbidden	D	40
G I	Compressed gas, toxic, corrosive, n.o.s. *Inhalation Hazard Zone D*	2.3	UN3304	.....	2.3, 8	4	None	302, 305.	314, 315.	Forbidden	Forbidden	D	40
G I	Compressed gas, toxic, flammable, corrosive, n.o.s. *Inhalation Hazard Zone A*	2.3	UN3305	.....	2.3, 2.1, 8.	1	None	192	245	Forbidden	Forbidden	D	17, 40
G I	Compressed gas, toxic, flammable, corrosive, n.o.s. *Inhalation Hazard Zone B*	2.3	UN3305	.....	2.3, 2.1, 8.	2, B9, B14	None	302, 305.	314, 315.	Forbidden	Forbidden	D	17, 40
G I	Compressed gas, toxic, flammable, corrosive, n.o.s. *Inhalation Hazard Zone C*	2.3	UN3305	.....	2.3, 2.1, 8.	3, B14	None	302, 305.	314, 315.	Forbidden	Forbidden	D	17, 40
G I	Compressed gas, toxic, flammable, corrosive, n.o.s. *Inhalation Hazard Zone D*	2.3	UN3305	.....	2.3, 2.1, 8.	4	None	302, 305.	314, 315.	Forbidden	Forbidden	D	17, 40
G	Compressed gas, toxic, flammable, n.o.s. *Inhalation hazard Zone A*	2.3	UN1953	.....	2.3, 2.1.	1	None	192	245	Forbidden	Forbidden	D	40
G	Compressed gas, toxic, flammable, n.o.s. *Inhalation hazard Zone B*	2.3	UN1953	.....	2.3, 2.1.	2, B9, B14	None	302, 305.	314, 315.	Forbidden	Forbidden	D	40
G	Compressed gas, toxic, flammable, n.o.s. *Inhalation Hazard Zone C*	2.3	UN1953	.....	2.3, 2.1.	3, B14	None	302, 305.	314, 315.	Forbidden	Forbidden	D	40
G	Compressed gas, toxic, flammable, n.o.s. *Inhalation Hazard Zone D*	2.3	UN1953	.....	2.3, 2.1.	4	None	302, 305.	314, 315.	Forbidden	Forbidden	D	40
G	Compressed gas, toxic, n.o.s. *Inhalation Hazard Zone A*	2.3	UN1955	.....	2.3	1	None	192	245	Forbidden	Forbidden	D	40
G	Compressed gas, toxic, n.o.s. *Inhalation Hazard Zone B*	2.3	UN1955	.....	2.3	2, B9, B14	None	302, 305.	314, 315.	Forbidden	Forbidden	D	40
G	Compressed gas, toxic, n.o.s. *Inhalation Hazard Zone C*	2.3	UN1955	.....	2.3	3, B14	None	302, 305.	314, 315.	Forbidden	Forbidden	D	40
G	Compressed gas, toxic, n.o.s. *Inhalation Hazard Zone D*	2.3	UN1955	.....	2.3	4	None	302, 305.	314, 315.	Forbidden	Forbidden	D	40
G I	Compressed gas, toxic, oxdizing, corrosive, n.o.s. *Inhalation Hazard Zone A*	2.3	UN3306	.....	2.3, 5.1, 8.	1	None	192	244	Forbidden	Forbidden	D	40, 89, 90
G I	Compressed gas, toxic, oxidizing, corrosive, n.o.s. *Inhalation Hazard Zone B*	2.3	UN3306	.....	2.3, 5.1, 8.	2, B9, B14	None	302, 305.	314, 315.	Forbidden	Forbidden	D	40, 89, 90
G I	Compressed gas, toxic, oxidizing, corrosive, n.o.s. *Inhalation Hazard Zone C*	2.3	UN3306	.....	2.3, 5.1, 8.	3, B14	None	302, 305.	314, 315.	Forbidden	Forbidden	D	40, 89, 90
G I	Compressed gas, toxic, oxidizing, corrosive, n.o.s. *Inhalation Hazard Zone D*	2.3	UN3306	.....	2.3, 5.1, 8.	4	None	302, 305.	314, 315.	Forbidden	Forbidden	D	40, 89, 90
G	Compressed gas, toxic, oxidizing, n.o.s. *Inhalation Hazard Zone A*	2.3	UN3303	.....	2.3, 5.1.	1	None	192	245	Forbidden	Forbidden	D	40
G	Compressed gas, toxic, oxidizing, n.o.s. *Inhalation Hazard Zone B*	2.3	UN3303	.....	2.3, 5.1.	2, B9, B14	None	302, 305.	314, 315.	Forbidden	Forbidden	D	40
G	Compressed gas, toxic, oxidizing, n.o.s. *Inhalation Hazard Zone C*	2.3	UN3303	.....	2.3, 5.1.	3, B14	None	302, 305.	314, 315.	Forbidden	Forbidden	D	40
G	Compressed gas, toxic, oxidizing, n.o.s. *Inhalation Hazard Zone D*	2.3	UN3303	.....	2.3, 5.1.	4	None	302, 305.	314, 315.	Forbidden	Forbidden	D	40

§ 172.101 HAZARDOUS MATERIALS TABLE—Continued

Symbols	Hazardous materials descriptions and proper shipping names	Hazard class or Division	Identification Numbers	PG	Label Codes	Special provisions (§172.102)	(8) Packaging (§173.***) Exceptions	Non-bulk	Bulk	(9) Quantity limitations Passenger aircraft/rail	Cargo aircraft only	(10) Vessel stowage Location	Other
(1)	(2)	(3)	(4)	(5)	(6)	(7)	(8A)	(8B)	(8C)	(9A)	(9B)	(10A)	(10B)
D	Consumer commodity	ORM-D			None		156, 306.	156, 306.	None	30 kg gross	30 kg gross	A	
	Contrivances, water-activated, *with burster, expelling charge or propelling charge*	1.2L	UN0248	II	1.2L	101	None	62	None	Forbidden	Forbidden	08	8E, 14E, 15E, 17E
	Contrivances, water-activated, *with burster, expelling charge or propelling charge*	1.3L	UN0249	II	1.3L	101	None	62	None	Forbidden	Forbidden	08	8E, 14E, 15E, 17E
	Copper acetoarsenite	6.1	UN1585	II	6.1	IB8, IP2, IP4, T3, TP33	153	212	242	25 kg	100 kg	A	
	Copper acetylide	Forbidden											
	Copper amine azide	Forbidden											
	Copper arsenite	6.1	UN1586	II	6.1	IB8, IP2, IP4, T3, TP33	153	212	242	25 kg	100 kg	A	
	Copper based pesticides, liquid, flammable, toxic, *flash point less than 23 degrees C*	3	UN2776	I	3, 6.1	T14, TP2, TP13, TP27	None	201	243	Forbidden	30 L	B	40
				II	3, 6.1	IB2, T11, TP2, TP13, TP27	150	202	243	1 L	60 L	B	40
	Copper based pesticides, liquid, toxic	6.1	UN3010	I	6.1	T14, TP2, TP13, TP27	None	201	243	1 L	30 L	B	40
				II	6.1	IB2, T11, TP2, TP13, TP27	153	202	243	5 L	60 L	B	40
				III	6.1	IB3, T7, TP2, TP28	153	203	241	60 L	220 L	A	40
	Copper based pesticides, liquid, toxic, flammable, *flash point not less than 23 degrees C*	6.1	UN3009	I	6.1, 3	T14, TP2, TP13, TP27	None	201	243	1 L	30 L	B	40
				II	6.1, 3	IB2, T11, TP2, TP13, TP27	153	202	243	5 L	60 L	B	40
				III	6.1, 3	B1, IB3, T7, TP2, TP28	153	203	242	60 L	220 L	A	40
	Copper based pesticides, solid, toxic	6.1	UN2775	I	6.1	IB7, IP1, T6, TP33	None	211	242	5 kg	50 kg	A	40
				II	6.1	IB8, IP2, IP4, T3, TP33	153	212	242	25 kg	100 kg	A	40
				III	6.1	IB8, IP3, T1, TP33	153	213	240	100 kg	200 kg	A	40
	Copper chlorate	5.1	UN2721	II	5.1	A1, IB8, IP2, IP4, T3, TP33	152	212	242	5 kg	25 kg	A	56, 58
	Copper chloride	8	UN2802	III	8	IB8, IP3, T1, TP33	154	213	240	25 kg	100 kg	A	
	Copper cyanide	6.1	UN1587	II	6.1	IB8, IP2, IP4, T3, TP33	153	204	242	25 kg	100 kg	A	52
	Copper selenate, see Selenates *or* Selenites												
	Copper selenite, see Selenates *or* Selenites												
	Copper tetramine nitrate	Forbidden											
A W	Copra	4.2	UN1363	III	4.2	IB8, IP3, IP7	None	213	241	Forbidden	Forbidden	A	13, 19, 48, 119
	Cord, detonating, *flexible*	1.1D	UN0065	II	1.1D	102	63(a)	62	None	Forbidden	Forbidden	07	
	Cord, detonating, *flexible*	1.4D	UN0289	II	1.4D		None	62	None	Forbidden	75 kg	06	
	Cord detonating *or* Fuse detonating *metal clad*	1.2D	UN0102	II	1.2D		None	62	None	Forbidden	Forbidden	07	
	Cord, detonating *or* Fuse, detonating *metal clad*	1.1D	UN0290	II	1.1D		None	62	None	Forbidden	Forbidden	07	
	Cord, detonating, mild effect *or* Fuse, detonating, mild effect *metal clad*	1.4D	UN0104	II	1.4D		None	62	None	Forbidden	75 kg	06	
	Cord, igniter	1.4G	UN0066	II	1.4G		None	62	None	Forbidden	75 kg	06	
	Cordeau detonant fuse, see Cord, detonating, *etc;* Cord, detonating, *flexible*												
	Cordite, see Powder, smokeless												
G	Corrosive liquid, acidic, inorganic, n.o.s.	8	UN3264	I	8	A6, B10, T14, TP2, TP27	None	201	243	0.5 L	2.5 L	B	40
				II	8	A6, B2, IB2, T11, TP2, TP27	154	202	242	1 L	30 L	B	40
				III	8	IB3, T7, TP1, TP28	154	203	241	5 L	60 L	A	40
G	Corrosive liquid, acidic, organic, n.o.s.	8	UN3265	I	8	A6, B10, T14, TP2, TP27	None	201	243	0.5 L	2.5 L	B	40

	.....	.....		II	8	B2, IB2, T11, TP2, TP27	154	202	242	1 L	30 L	B	40
	.....	.....		III	8	IB3, T7, TP1, TP28	154	203	241	5 L	60 L	A	40
G	Corrosive liquid, basic, inorganic, n.o.s.	8	UN3266	I	8	A6, T14, TP2, TP27	None	201	243	0.5 L	2.5 L	B	40, 52
	.....	.....		II	8	B2, IB2, T11, TP2, TP27	154	202	242	1 L	30 L	B	40, 52
	.....	.....		III	8	IB3, T7, TP1, TP28	154	203	241	5 L	60 L	A	40, 52
G	Corrosive liquid, basic, organic, n.o.s.	8	UN3267	I	8	A6, B10, T14, TP2, TP27	None	201	243	0.5 L	2.5 L	B	40, 52
	.....	.....		II	8	B2, IB2, T11, TP2, TP27	154	202	242	1 L	30 L	B	40, 52
	.....	.....		III	8	IB3, T7, TP1, TP28	154	203	241	5 L	60 L	A	40, 52
G	Corrosive liquid, self-heating, n.o.s.	8	UN3301	I	8, 4.2	A6, B10	None	201	243	0.5 L	2.5 L	D	.....
	.....	.....		II	8, 4.2	B2, IB1	154	202	242	1 L	30 L	D	.....
G	Corrosive liquids, flammable, n.o.s.	8	UN2920	I	8, 3	A6, B10, T14, TP2, TP27	None	201	243	0.5 L	2.5 L	C	25, 40
	.....	.....		II	8, 3	B2, IB2, T11, TP2, TP27	None	202	243	1 L	30 L	C	25, 40
G	Corrosive liquids, n.o.s.	8	UN1760	I	8	A6, A7, B10, T14, TP2, TP27	None	201	243	0.5 L	2.5 L	B	40
	.....	.....		II	8	B2, IB2, T11, TP2, TP27	154	202	242	1 L	30 L	B	40
	.....	.....		III	8	IB3, T7, TP1, TP28	154	203	241	5 L	60 L	A	40
G	Corrosive liquids, oxidizing, n.o.s.	8	UN3093	I	8, 5.1	A6, A7	None	201	243	Forbidden	2.5 L	C	89
	.....	.....		II	8, 5.1	A6, A7, IB2	None	202	243	1 L	30 L	C	89
G	Corrosive liquids, toxic, n.o.s.	8	UN2922	I	8, 6.1	A7, A6, B10, T14, TP2, TP13, TP27	None	201	243	0.5 L	2.5 L	B	40
	.....	.....		II	8, 6.1	B3, IB2, T7, TP2	154	202	243	1 L	30 L	B	40
	.....	.....		III	8, 6.1	IB3, T7, TP1, TP28	154	203	241	5 L	60 L	B	40
G	Corrosive liquids, water-reactive, n.o.s.	8	UN3094	I	8, 4.3	A6, A7	None	201	243	Forbidden	1 L	E	.....
	.....	.....		II	8, 4.3	A6, A7	None	202	243	1 L	5 L	E	.....
G	Corrosive solid, acidic, inorganic, n.o.s.	8	UN3260	I	8	IB7, IP1, T6, TP33	None	211	242	1 kg	25 kg	B	.....
	.....	.....		II	8	IB8, IP2, IP4, T3, TP33	154	212	240	15 kg	50 kg	B	.....
	.....	.....		III	8	IB8, IP3, T1, TP33	154	213	240	25 kg	100 kg	A	.....
G	Corrosive solid, acidic, organic, n.o.s.	8	UN3261	I	8	IB7, IP1, T6, TP33	None	211	242	1 kg	25 kg	B	.....
	.....	.....		II	8	IB8, IP2, IP4, T3, TP33	154	212	240	15 kg	50 kg	B	.....
	.....	.....		III	8	IB8, IP3, T1, TP33	154	213	240	25 kg	100 kg	A	.....
G	Corrosive solid, basic, inorganic, n.o.s.	8	UN3262	I	8	IB7, IP1, T6, TP33	None	211	242	1 kg	25 kg	B	52
	.....	.....		II	8	IB8, IP2, IP4, T3, TP33	154	212	240	15 kg	50 kg	B	52
	.....	.....		III	8	IB8, IP3, T1, TP33	154	213	240	25 kg	100 kg	A	52
G	Corrosive solid, basic, organic, n.o.s.	8	UN3263	I	8	IB7, IP1, T6, TP33	None	211	242	1 kg	25 kg	B	52
	.....	.....		II	8	IB8, IP2, IP4, T3, TP33	154	212	240	15 kg	50 kg	B	52
	.....	.....		III	8	IB8, IP3, T1, TP33	154	213	240	25 kg	100 kg	A	52
G	Corrosive solids, flammable, n.o.s.	8	UN2921	I	8, 4.1	IB6, T6, TP33	None	211	242	1 kg	25 kg	B	12, 25
	.....	.....		II	8, 4.1	IB8, IP2, IP4, T3, TP33	None	212	242	15 kg	50 kg	B	12, 25
G	Corrosive solids, n.o.s.	8	UN1759	I	8	IB7, IP1, T6, TP33	None	211	242	1 kg	25 kg	B	.....
	.....	.....		II	8	128, IB8, IP2, IP4, T3, TP33	154	212	240	15 kg	50 kg	A	.....
	.....	.....		III	8	128, IB8, IP3, T1, TP33	154	213	240	25 kg	100 kg	A	.....
G	Corrosive solids, oxidizing, n.o.s.	8	UN3084	I	8, 5.1	T6, TP33	None	211	242	1 kg	25 kg	C	.....
	.....	.....		II	8, 5.1	IB6, IP2, T3, TP33	None	212	242	15 kg	50 kg	C	.....
G	Corrosive solids, self-heating, n.o.s.	8	UN3095	I	8, 4.2	T6, TP33	None	211	243	1 kg	25 kg	C	.....

§ 172.101 HAZARDOUS MATERIALS TABLE—Continued

Symbols	Hazardous materials descriptions and proper shipping names	Hazard class or Division	Identification Numbers	PG	Label Codes	Special provisions (§172.102)	(8) Packaging (§173.***)			(9) Quantity limitations		(10) Vessel stowage	
							Exceptions	Non-bulk	Bulk	Passenger aircraft/rail	Cargo aircraft only	Location	Other
(1)	(2)	(3)	(4)	(5)	(6)	(7)	(8A)	(8B)	(8C)	(9A)	(9B)	(10A)	(10B)
	.....	.....		II	8, 4.2	IB6, IP2, T3, TP33	None	212	242	15 kg	50 kg	C	.....
G	Corrosive solids, toxic, n.o.s.	8	UN2923	I	8, 6.1	IB7, T6, TP33	None	211	242	1 kg	25 kg	B	40
	.....	.....		II	8, 6.1	IB8, IP2, IP4, T3, TP33	154	212	240	15 kg	50 kg	B	40
	.....	.....		III	8, 6.1	IB8, IP3, T1, TP33	154	213	240	25 kg	100 kg	B	40, 95
G	Corrosive solids, water-reactive, n.o.s.	8	UN3096	I	8, 4.3	IB4, IP1, T6, TP33	None	211	243	1 kg	25 kg	D	.....
	.....	.....		II	8, 4.3	IB6, IP2, T3, TP33	None	212	242	15 kg	50 kg	D	.....
D W	Cotton	9	NA1365	.....	9	137, IB8, IP2, IP4, W41	None	None	None	No limit	No limit	A	.....
A W	Cotton waste, oily	4.2	UN1364	III	4.2	IB8, IP3, IP7	None	213	None	Forbidden	Forbidden	A	54
A I W	Cotton, wet	4.2	UN1365	III	4.2	IB8, IP3, IP7	None	204	241	Forbidden	Forbidden	A	.....
	Coumarin derivative pesticides, liquid, flammable, toxic, *flash point less than 23 degrees C*	3	UN3024	I	3, 6.1	T14, TP2, TP13, TP27	None	201	243	Forbidden	30 L	B	40
	.....	.....		II	3, 6.1	IB2, T11, TP2, TP13, TP27	150	202	243	1 L	60 L	B	40
	Coumarin derivative pesticides, liquid, toxic	6.1	UN3026	I	6.1	T14, TP2, TP13, TP27	None	201	243	1 L	30 L	B	40
	.....	.....		II	6.1	IB2, T11, TP2, TP27	153	202	243	5 L	60 L	B	40
	.....	.....		III	6.1	IB3, T7, TP1, TP28	153	203	241	60 L	220 L	A	40
	Coumarin derivative pesticides, liquid, toxic, flammable, *flash point not less than 23 degrees C*	6.1	UN3025	I	6.1, 3	T14, TP2, TP13, TP27	None	201	243	1 L	30 L	B	40
	.....	.....		II	6.1, 3	IB2, T11, TP2, TP13, TP27	153	202	243	5 L	60 L	B	40
	.....	.....		III	6.1, 3	B1, IB3, T7, TP1, TP28	153	203	242	60 L	220 L	A	40
	Coumarin derivative pesticides, solid, toxic	6.1	UN3027	I	6.1	IB7, IP1, T6, TP33	None	211	242	5 kg	50 kg	A	40
	.....	.....		II	6.1	IB8, IP2, IP4, T3, TP33	153	212	242	25 kg	100 kg	A	40
	.....	.....		III	6.1	IB8, IP3, T1, TP33	153	213	240	100 kg	200 kg	A	40
	Cresols, liquid	6.1	UN2076	II	6.1, 8	IB2, IP2, IP4, T7, TP2	153	202	243	1 L	30 L	B	.....
	Cresols, solid	6.1	UN3455	II	6.1, 8	IB8, IP2, IP4, T3, TP33	153	212	242	15 kg	50 kg	B	.....
	Cresylic acid	6.1	UN2022	II	6.1, 8	IB2, T7, TP2, TP13	153	202	243	1 L	30 L	B	.....
	Crotonaldehyde, stabilized	6.1	UN1143	I	6.1, 3	2, B9, B14, B32, B74, B77, T20, TP2, TP13, TP38, TP45	None	227	244	Forbidden	Forbidden	B	40
	Crotonic acid *liquid*	8	UN2823	III	8	IB8, T1	154	203	241	5 L	60 L	A	12
	Crotonic acid, *solid*	8	UN2823	III	8	IB8, IP3, T1, TP33	154	213	240	25 kg	100 kg	A	12
	Crotonylene	3	UN1144	I	3	T11, TP2	150	201	243	1 L	30 L	E	.....
	Cupriethylenediamine solution	8	UN1761	II	8, 6.1	IB2, T7, TP2	154	202	243	1 L	30 L	A	.....
	.....	.....		III	8, 6.1	IB3, T7, TP1, TP28	154	203	242	5 L	60 L	A	95
	Cutters, cable, explosive	1.4S	UN0070	II	1.4S ...		None	62	None	25 kg	100 kg	05	.....
	Cyanide or cyanide mixtures, dry, see Cyanides, inorganic, solid, n.o.s.	.....			.....		.....	.....	.....	.....	.....		.....
	Cyanide solutions, n.o.s.	6.1	UN1935	I	6.1	B37, T14, TP2, TP13, TP27	None	201	243	1 L	30 L	B	40, 52
	.....	.....		II	6.1	IB2, T11, TP2, TP13, TP27	153	202	243	5 L	60 L	A	40, 52
	.....	.....		III	6.1	IB3, T7, TP2, TP13, TP28	153	203	241	60 L	220 L	A	40, 52
	Cyanides, inorganic, solid, n.o.s.	6.1	UN1588	I	6.1	IB7, IP1, N74, N75, T6, TP33	None	211	242	5 kg	50 kg	A	52

			II	6.1	IB8, IP2, IP4, N74, N75, T3, TP33	153	212	242	25 kg	100 kg	A	52
			III	6.1	IB8, IP3, N74, N75, T1, TP33	153	213	240	100 kg	200 kg	A	52
Cyanogen	2.3	UN1026		2.3, 2.1.	2	None	304	245	Forbidden	Forbidden	D	40
Cyanogen bromide	6.1	UN1889	I	6.1, 8	A6, A8, T6, TP33	None	211	242	1 kg	15 kg	D	40
Cyanogen chloride, stabilized	2.3	UN1589		2.3, 8	1	None	192	245	Forbidden	Forbidden	D	40
Cyanuric chloride	8	UN2670	II	8	IB8, IP2, IP4, T3, TP33	None	212	240	15 kg	50 kg	A	12, 40
Cyanuric triazide	Forbidden											
Cyclobutane	2.1	UN2601		2.1		306	304	314, 315.	Forbidden	150 kg	B	40
Cyclobutyl chloroformate	6.1	UN2744	II	6.1, 8, 3.	IB1, T7, TP2, TP13	153	202	243	1 L	30 L	A	12, 13, 21, 25, 40, 100
1,5,9-Cyclododecatriene	6.1	UN2518	III	6.1	IB3, T4, TP1	153	203	241	60 L	220 L	A	40
Cycloheptane	3	UN2241	II	3	IB2, T4, TP1	150	202	242	5 L	60 L	B	40
Cycloheptatriene	3	UN2603	II	3, 6.1	IB2, T7, TP1, TP13	150	202	243	1 L	60 L	E	40
Cycloheptene	3	UN2242	II	3	B1, IB2, T4, TP1	150	202	242	5 L	60 L	B	
Cyclohexane	3	UN1145	II	3	IB2, T4, TP1	150	202	242	5 L	60 L	E	
Cyclohexanone	3	UN1915	III	3	B1, IB3, T2, TP1	150	203	242	60 L	220 L	A	
Cyclohexene	3	UN2256	II	3	IB2, T4, TP1	150	202	242	5 L	60 L	E	
Cyclohexenyltrichlorosilane	8	UN1762	II	8	A7, B2, IB2, N34, T7, TP2, TP13	None	202	242	Forbidden	30 L	C	40
Cyclohexyl acetate	3	UN2243	III	3	B1, IB3, T2, TP1	150	203	242	60 L	220 L	A	
Cyclohexyl isocyanate	6.1	UN2488	I	6.1, 3	2, B9, B14, B32, B74, B77, T20, TP2, TP13, TP38, TP45	None	227	244	Forbidden	Forbidden	D	40
Cyclohexyl mercaptan	3	UN3054	III	3	B1, IB3, T2, TP1	150	203	242	60 L	220 L	A	40, 95
Cyclohexylamine	8	UN2357	II	8, 3	IB2, T7, TP2	None	202	243	1 L	30 L	A	40
Cyclohexyltrichlorosilane	8	UN1763	II	8	A7, B2, IB2, N34, T7, TP2, TP13	None	202	242	Forbidden	30 L	C	40
Cyclonite and cyclotetramethylenetetranitramine mixtures, wetted *or* desensitized *see* RDX and HMX mixtures, wetted *or* desensitized *etc.*												
Cyclonite and HMX mixtures, wetted *or* desensitized *see* RDX and HMX mixtures, wetted *or* desensitized *etc.*												
Cyclonite and octogen mixtures, wetted *or* desensitized *see* RDX and HMX mixtures, wetted *or* desensitized *etc.*												
Cyclonite, *see* Cyclotrimethylenetrinitramine, *etc*												
Cyclooctadiene phosphines, *see* 9-Phosphabicyclononanes												
Cyclooctadienes	3	UN2520	III	3	B1, IB3, T2, TP1	150	203	242	60 L	220 L	A	
Cyclooctatetraene	3	UN2358	II	3	IB2, T4, TP1	150	202	242	5 L	60 L	B	
Cyclopentane	3	UN1146	II	3	IB2, T7, TP1	150	202	242	5 L	60 L	E	
Cyclopentane, methyl, see Methylcyclopentane												
Cyclopentanol	3	UN2244	III	3	B1, IB3, T2, TP1	150	203	242	60 L	220 L	A	
Cyclopentanone	3	UN2245	III	3	B1, IB3, T2, TP1	150	203	242	60 L	220 L	A	
Cyclopentene	3	UN2246	II	3	IB2, IP8, T7, TP2	150	202	242	5 L	60 L	E	
Cyclopropane	2.1	UN1027		2.1	T50	306	304	314, 315.	Forbidden	150 kg	E	40
Cyclotetramethylene tetranitramine (dry or unphlegmatized) (HMX)	Forbidden											
Cyclotetramethylenetetranitramine, desensitized *or* Octogen, desensitized *or* HMX, desensitized	1.1D	UN0484	II	1.1D		None	62	None	Forbidden	Forbidden	10	
Cyclotetramethylenetetranitramine, wetted *or* HMX, wetted *or* Octogen, wetted *with not less than 15 percent water, by mass.*	1.1D	UN0226	II	1.1D		None	62	None	Forbidden	Forbidden	10	
Cyclotrimethylenetrinitramine and cyclotetramethylenetetranitramine mixtures, wetted *or* desensitized *see* RDX and HMX mixtures, wetted *or* desensitized *etc.*												
Cyclotrimethylenenitramine and octogen, mixtures, wetted *or* desensitized *see* RDX and HMX mixtures, wetted *or* desensitized *etc.*												
Cyclotrimethylenetrinitramine and HMX mixtures, wetted *or* desensitized *see* RDX and HMX mixtures, wetted *or* desensitized *etc.*												
Cyclotrimethylenetrinitramine, desensitized *or* Cyclonite, desensitized *or* Hexogen, desensitized *or* RDX, desensitized.	1.1D	UN0483	II	1.1D		None	62	None	Forbidden	Forbidden	10	
Cyclotrimethylenetrinitramine, wetted *or* Cyclonite, wetted *or* Hexogen, wetted *or* RDX, wetted *with not less than 15 percent water by mass.*	1.1D	UN0072	II	1.1D		None	62	None	Forbidden	Forbidden	10	
Cymenes	3	UN2046	III	3	B1, IB3, T2, TP1	150	203	242	60 L	220 L	A	
Dangerous Goods in Machinery *or* Dangerous Goods in Apparatus	9	UN3363			136	None	222	None	No limit	No limit	A	
Decaborane	4.1	UN1868	II	4.1, 6.1.	A19, A20, IB6, IP2, T3, TP33	None	212	None	Forbidden	50 kg	A	74
Decahydronaphthalene	3	UN1147	III	3	B1, IB3, T2, TP1	150	203	242	60 L	220 L	A	
n-Decane	3	UN2247	III	3	B1, IB3, T2, TP1	150	203	242	60 L	220 L	A	

§ 172.101 HAZARDOUS MATERIALS TABLE—Continued

Symbols	Hazardous materials descriptions and proper shipping names	Hazard class or Division	Identification Numbers	PG	Label Codes	Special provisions (§172.102)	(8) Packaging (§173.***)			(9) Quantity limitations		(10) Vessel stowage	
							Exceptions	Non-bulk	Bulk	Passenger aircraft/rail	Cargo aircraft only	Location	Other
(1)	(2)	(3)	(4)	(5)	(6)	(7)	(8A)	(8B)	(8C)	(9A)	(9B)	(10A)	(10B)
	Deflagrating metal salts of aromatic nitroderivatives, n.o.s.	1.3C	UN0132	II	1.3C		None	62	None	Forbidden	Forbidden	10	5E
	Delay electric igniter, see Igniters												
	Depth charges, see Charges, depth												
G	Desensitized explosive, liquid, n.o.s.	3	UN3379	I	3	164	None	201	None	Forbidden	Forbidden	D	36
G	Desensitized explosive, solid, n.o.s.	4.1	UN3380	I	4.1	164	None	211	None	Forbidden	Forbidden	D	28, 36
	Detonating relays, see Detonators, *etc*												
	Detonator assemblies, non-electric *for blasting*	1.1B	UN0360	II	1.1B		None	62	None	Forbidden	Forbidden	11	
	Detonator assemblies, non-electric, *for blasting*	1.4B	UN0361	II	1.4B	103	63(f), 63(g).	62	None	Forbidden	75 kg	06	
	Detonator, assemblies, non-electric *for blasting*	1.4S	UN0500	II	1.4S		63(f), 63(g).	62	None	25 kg	100 kg	05	
	Detonators, electric, *for blasting*	1.1B	UN0030	II	1.1B		63(f), 63(g).	62	None	Forbidden	Forbidden	11	
	Detonators, electric, *for blasting*	1.4B	UN0255	II	1.4B	103	63(f), 63(g).	62	None	Forbidden	75 kg	06	
	Detonators, electric *for blasting*	1.4S	UN0456	II	1.4S		63(f), 63(g).	62	None	25 kg	100 kg	05	
	Detonators for ammunition	1.1B	UN0073	II	1.1B		None	62	None	Forbidden	Forbidden	11	
	Detonators for ammunition	1.2B	UN0364	II	1.2B		None	62	None	Forbidden	Forbidden	11	
	Detonators for ammunition	1.4B	UN0365	II	1.4B	103	None	62	None	Forbidden	75 kg	06	
	Detonators for ammunition	1.4S	UN0366	II	1.4S		None	62	None	25 kg	100 kg	05	
	Detonators, non-electric, *for blasting*	1.1B	UN0029	II	1.1B		None	62	None	Forbidden	Forbidden	11	
	Detonators, non-electric, *for blasting*	1.4B	UN0267	II	1.4B	103	63(f), 63(g).	62	None	Forbidden	75 kg	06	
	Detonators, non-electric,*for blasting*	1.4S	UN0455	II	1.4S		63(f), 63(g).	62	None	25 kg	100 kg	5	
	Deuterium, compressed	2.1	UN1957		2.1		306	302	None	Forbidden	150 kg	E	40
	Devices, small, hydrocarbon gas powered *or* Hydrocarbon gas refills for small devices *with release device.*	2.1	UN3150		2.1		306	304	None	1 kg	15 kg	B	40
	Di-n-amylamine	3	UN2841	III	3, 6.1	B1, IB3, T4, TP1	150	203	242	60 L	220 L	A	
	Di-n-butyl peroxydicarbonate, with more than 52 percent in solution	Forbidden											
	Di-n-butylamine	8	UN2248	II	8, 3	IB2, T7, TP2	None	202	243	1 L	30 L	A	
	2,2-Di-(tert-butylperoxy) butane, with more than 55 percent in solution	Forbidden											
	Di-(tert-butylperoxy) phthalate, with more than 55 percent in solution	Forbidden											
	2,2-Di-(4,4-di-tert-butylperoxycyclohexyl) propane, with more than 42 percent with inert solid	Forbidden											
	Di-2,4-dichlorobenzoyl peroxide, with more than 75 percent with water	Forbidden											
	1,2-Di-(dimethylamino)ethane	3	UN2372	II	3	IB2, T4, TP1	150	202	242	5 L	60 L	B	
	Di-2-ethylhexyl phosphoric acid, see Diisooctyl acid phosphate												
	Di-(1-hydroxytetrazole) (dry)	Forbidden											
	Di-(1-naphthoyl) peroxide	Forbidden											
	a,a'-Di-(nitroxy) methylether	Forbidden											
	Di-(beta-nitroxyethyl) ammonium nitrate	Forbidden											
	Diacetone alcohol	3	UN1148	II	3	IB2, T4, TP1	150	202	242	5 L	60 L	B	
				III	3	B1, IB3, T2, TP1	150	203	242	60 L	220 L	A	
	Diacetone alcohol peroxides, with more than 57 percent in solution with more than 9 percent hydrogen peroxide, less than 26 percent diacetone alcohol and less than 9 percent water; total active oxygen content more than 9 percent by mass.	Forbidden											
	Diacetyl, see Butanedione												
	Diacetyl peroxide, solid, or with more than 25 percent in solution	Forbidden											
	Diagnostic specimen	6.2				A82	134	199	None	4 L or 4 kg	4 L or 4 kg	A	40
	Diallylamine	3	UN2359	II	3, 6.1, 8.	IB2, T7, TP1	150	202	243	1 L	5 L	B	21, 40, 100
	Diallylether	3	UN2360	II	3, 6.1	IB2, N12, T7, TP1, TP13	150	202	243	1 L	60 L	E	40
	4,4'-Diaminodiphenyl methane	6.1	UN2651	III	6.1	IB8, IP3, T1, TP33	153	213	240	100 kg	200 kg	A	
	p-Diazidobenzene	Forbidden											
	1,2-Diazidoethane	Forbidden											
	1,1'-Diazoaminonaphthalene	Forbidden											
	Diazoaminotetrazole (dry)	Forbidden											
	Diazodinitrophenol (dry)	Forbidden											
	Diazodinitrophenol, wetted *with not less than 40 percent water or mixture of alcohol and water, by mass.*	1.1A	UN0074	II	1.1A	111, 117	None	62	None	Forbidden	Forbidden	12	
	Diazodiphenylmethane	Forbidden											
	Diazonium nitrates (dry)	Forbidden											

	Diazonium perchlorates (dry)	Forbidden			.....		.....	.....	.....	.....	.....		.....
	1,3-Diazopropane	Forbidden			.....		.....	.....	.....	.....	.....		.....
	Dibenzyl peroxydicarbonate, with more than 87 percent with water	Forbidden			.....		.....	.....	.....	.....	.....		.....
	Dibenzyldichlorosilane	8	UN2434	II	8	B2, IB2, T7, TP2, TP13	154	202	242	1 L	30 L	C	40
	Diborane	2.3	UN1911	.....	2.3, 2.1.	1	None	302	None	Forbidden	Forbidden	D	40, 57
D	Diborane mixtures	2.1	NA1911	.....	2.1	5	None	302	245	Forbidden	Forbidden	D	40, 57
	Dibromoacetylene	Forbidden			.....		.....	.....	.....	.....	.....		.....
	1,2-Dibromobutan-3-one	6.1	UN2648	II	6.1	IB2	153	202	243	5 L	60 L	B	40
	Dibromochloropropane	6.1	UN2872	II	6.1	IB2, T7, TP2	153	202	243	5 L	60 L	A	.....
	.....	.....		III	6.1	IB3, T4, TP1	153	203	241	60 L	220 L	A	.....
A	Dibromodifluoromethane, *R12B2*	9	UN1941	III	None	T11, TP2	155	203	241	100 L	220 L	A	25
	1,2-Dibromoethane, see Ethylene dibromide	.....			.....		.....	.....	.....	.....	.....		.....
	Dibromomethane	6.1	UN2664	III	6.1	IB3, T4, TP1	153	203	241	60 L	220 L	A	.....
	Dibutyl ethers	3	UN1149	III	3	B1, IB3, T2, TP1	150	203	242	60 L	220 L	A	.....
	Dibutylaminoethanol	6.1	UN2873	III	6.1	IB3, T4, TP1	153	203	241	60 L	220 L	A	.....
	N,N'-Dichlorazodicarbonamidine (salts of) (dry)	Forbidden			.....		.....	.....	.....	.....	.....		.....
	1,1-Dichloro-1-nitroethane	6.1	UN2650	II	6.1	IB2, T7, TP2	153	202	243	5 L	60 L	A	12, 40, 74
D	3,5-Dichloro-2,4,6-trifluoropyridine	6.1	NA9264	I	6.1	2, B9, B14, B32, B74, T20, TP4, TP12, TP13, TP38, TP45	None	227	244	Forbidden	Forbidden	A	40
	Dichloroacetic acid	8	UN1764	II	8	A3, A6, A7, B2, IB2, N34, T8, TP2, TP12	154	202	242	1 L	30 L	A	.....
	1,3-Dichloroacetone	6.1	UN2649	II	6.1	IB8, IP2, IP4, T3, TP33	153	212	242	25 kg	100 kg	B	12, 40
	Dichloroacetyl chloride	8	UN1765	II	8	A3, A6, A7, B2, B6, IB2, N34, T7, TP2	154	202	242	1 L	30 L	D	40
	Dichloroacetylene	Forbidden			.....		.....	.....	.....	.....	.....		.....
+	Dichloroanilines, liquid	6.1	UN1590	II	6.1	IB2, T7, TP2	153	202	243	5 L	60 L	A	40
	Dichloroanilines, solid	6.1	UN3442	II	6.1	IB8, IP2, IP4, T3, TP33	153	212	242	25 kg	100 kg	A	40
+	o-Dichlorobenzene	6.1	UN1591	III	6.1	IB3, T4, TP1	153	203	241	60 L	220 L	A	.....
	2,2'-Dichlorodiethyl ether	6.1	UN1916	II	6.1, 3	IB2, N33, N34, T7, TP2	153	202	243	5 L	60 L	A	.....
	Dichlorodifluoromethane and difluoroethane azeotropic mixture *or* Refrigerant gas R 500 *with approximately 74 percent dichlorodifluoromethane.*	2.2	UN2602	.....	2.2	T50	306	304	314, 315.	75 kg	150 kg	A	.....
	Dichlorodifluoromethane *or* Refrigerant gas R 12	2.2	UN1028	.....	2.2	T50	306	304	314, 315.	75 kg	150 kg	A	.....
	Dichlorodimethyl ether, symmetrical	6.1	UN2249	I	6.1, 3		None	201	243	Forbidden	Forbidden		40
	1,1-Dichloroethane	3	UN2362	II	3	IB2, T4, TP1	150	202	242	5 L	60 L	B	40
	1,2-Dichloroethane, see Ethylene dichloride	.....			.....		.....	.....	.....	.....	.....		.....
	Dichloroethyl sulfide	Forbidden			.....		.....	.....	.....	.....	.....		.....
	1,2-Dichloroethylene	3	UN1150	II	3	IB2, T7, TP2	150	202	242	5 L	60 L	B	.....
	Dichlorofluoromethane *or* Refrigerant gas R21	2.2	UN1029	.....	2.2	T50	306	304	314, 315.	75 kg	150 kg	A	.....
	Dichloroisocyanuric acid, dry *or* Dichloroisocyanuric acid salts	5.1	UN2465	II	5.1	28, IB8, IP4, T3, TP33	152	212	240	5 kg	25 kg	A	13
	Dichloroisopropyl ether	6.1	UN2490	II	6.1	IB2, T7, TP2	153	202	243	5 L	60 L	B	.....
	Dichloromethane	6.1	UN1593	III	6.1	IB3, IP8, N36, T7, TP2	153	203	241	60 L	220 L	A	.....
	Dichloropentanes	3	UN1152	III	3	B1, IB3, T2, TP1	150	203	242	60 L	220 L	A	.....
	Dichlorophenyl isocyanates	6.1	UN2250	II	6.1	IB8, IP2, IP4, T3, TP33	153	212	242	25 kg	100 kg	B	25, 40, 48
	Dichlorophenyltrichlorosilane	8	UN1766	II	8	A7, B2, B6, IB2, N34, T7, TP2, TP13	None	202	242	Forbidden	30 L	C	40
	1,2-Dichloropropane	3	UN1279	II	3	IB2, N36, T4, TP1	150	202	242	5 L	60 L	B	.....
	1,3-Dichloropropanol-2	6.1	UN2750	II	6.1	IB2, T7, TP2	153	202	243	5 L	60 L	A	12, 40
	Dichloropropene and propylene dichloride mixture, see 1,2- Dichloropropane	.....			.....		.....	.....	.....	.....	.....		.....
	Dichloropropenes	3	UN2047	II	3	IB2, T4, TP1	150	202	242	5 L	60 L	B	.....
	.....	.....		III	3	B1, IB3, T2, TP1	150	203	242	60 L	220 L	A	.....
	Dichlorosilane	2.3	UN2189	.....	2.3, 2.1, 8.	2, B9, B14	None	304	314, 315.	Forbidden	Forbidden	D	17, 40
	1,2-Dichloro-1,1,2,2- tetrafluoroethane *or* Refrigerant gas R 114	2.2	UN1958	.....	2.2	T50	306	304	314, 315.	75 kg	150 kg	A	.....
	Dichlorovinylchloroarsine	Forbidden			.....		.....	.....	.....	.....	.....		.....
	Dicycloheptadiene, see Bicyclo [2,2,1] hepta-2,5-diene, stabilized	.....			.....		.....	.....	.....	.....	.....		.....
	Dicyclohexylamine	8	UN2565	III	8	IB3, T4, TP1	154	203	241	5 L	60 L	A	.....

§ 172.101 HAZARDOUS MATERIALS TABLE—Continued

Symbols	Hazardous materials descriptions and proper shipping names	Hazard class or Division	Identification Numbers	PG	Label Codes	Special provisions (§172.102)	(8) Packaging (§173.***) Exceptions	Non-bulk	Bulk	(9) Quantity limitations Passenger aircraft/rail	Cargo aircraft only	(10) Vessel stowage Location	Other
(1)	(2)	(3)	(4)	(5)	(6)	(7)	(8A)	(8B)	(8C)	(9A)	(9B)	(10A)	(10B)
	Dicyclohexylammonium nitrite	4.1	UN2687	III	4.1	IB8, IP3, T1, TP33	151	213	240	25 kg	100 kg	A	48
	Dicyclopentadiene	3	UN2048	III	3	B1, IB3, T2, TP1	150	203	242	60 L	220 L	A	
	Didymium nitrate	5.1	UN1465	III	5.1	A1, IB8, IP3, T1, TP33	152	213	240	25 kg	100 kg	A	
D	Diesel fuel	3	NA1993	III	None	144, B1, IB3, T4, TP1, TP29	150	203	242	60 L	220 L	A	
I	Diesel fuel	3	UN1202	III	3	144, B1, IB3, T2, TP1	150	203	242	60 L	220 L	A	
	Diethanol nitrosamine dinitrate (dry)	Forbidden											
	Diethoxymethane	3	UN2373	II	3	IB2, T4, TP1	150	202	242	5 L	60 L	E	
	3,3-Diethoxypropene	3	UN2374	II	3	IB2, T4, TP1	150	202	242	5 L	60 L	B	
	Diethyl carbonate	3	UN2366	III	3	B1, IB3, T2, TP1	150	203	242	60 L	220 L	A	
	Diethyl cellosolve, see Ethylene glycol diethyl ether												
	Diethyl ether *or* Ethyl ether	3	UN1155	I	3	T11, TP2	150	201	243	1 L	30 L	E	40
	Diethyl ketone	3	UN1156	II	3	IB2, T4, TP1	150	202	242	5 L	60 L	B	
	Diethyl peroxydicarbonate, with more than 27 percent in solution	Forbidden											
	Diethyl sulfate	6.1	UN1594	II	6.1	IB2, T7, TP2	153	202	243	5 L	60 L	C	
	Diethyl sulfide	3	UN2375	II	3	IB2, T7, TP1, TP13	None	202	243	5 L	60 L	E	
	Diethylamine	3	UN1154	II	3, 8	A3, IB2, N34, T7, TP1	150	202	243	1 L	5 L	E	40
	2-Diethylaminoethanol	8	UN2686	II	8, 3	B2, IB2, T7, TP2	None	202	243	1 L	30 L	A	
	3-Diethyamino-propylamine.	3	UN2684	III	3, 8	B1, IB3, T4, TP1	150	203	242	5 L	60 L	A	
+	N, N-Diethylaniline	6.1	UN2432	III	6.1	IB3, T4, TP1	153	203	241	60 L	220 L	A	
	Diethylbenzene	3	UN2049	III	3	B1, IB3, T2, TP1	150	203	242	60 L	220 L	A	
	Diethyldichlorosilane	8	UN1767	II	8, 3	A7, B6, IB2, N34, T7, TP2, TP13	None	202	243	Forbidden	30 L	C	40
	Diethylene glycol dinitrate	Forbidden											
	Diethyleneglycol dinitrate, desensitized *with not less than 25 percent non-volatile water-insoluble phlegmatizer, by mass.*	1.1D	UN0075	II	1.1D		None	62	None	Forbidden	Forbidden	13	21E
	Diethylenetriamine	8	UN2079	II	8	B2, IB2, T7, TP2	154	202	242	1 L	30 L	A	40, 52
	N,N-Diethylethylenediamine	8	UN2685	II	8, 3	IB2, T7, TP2	None	202	243	1 L	30 L	A	
	Diethylgold bromide	Forbidden											
	Diethylthiophosphoryl chloride	8	UN2751	II	8	B2, IB2, T7, TP2	None	212	240	15 kg	50 kg	D	12, 40
	Diethylzinc	4.2	UN1366	I	4.2, 4.3.	B11, T21, TP2, TP7	None	181	244	Forbidden	Forbidden	D	18
	Difluorochloroethanes, see 1-Chloro-1,1-difluoroethanes												
	1,1-Difluoroethane *or* Refrigerant gas R 152a	2.1	UN1030		2.1	T50	306	304	314, 315.	Forbidden	150 kg	B	40
	1,1-Difluoroethylene *or* Refrigerant gas R 1132a	2.1	UN1959		2.1		306	304	None	Forbidden	150 kg	E	40
	Difluoromethane *or* Refrigerant gas R 32	2.1	UN3252		2.1	T50	306	302	314, 315.	Forbidden	150 kg	D	40
	Difluorophosphoric acid, anhydrous	8	UN1768	II	8	A6, A7, B2, IB2, N5, N34, T8, TP2, TP12	None	202	242	1 L	30 L	A	40
	2,3-Dihydropyran	3	UN2376	II	3	IB2, T4, TP1	150	202	242	5 L	60 L	B	
	1,8-Dihydroxy-2,4,5,7-tetranitroanthraquinone (chrysamminic acid)	Forbidden											
	Diiodoacetylene	Forbidden											
	Diisobutyl ketone	3	UN1157	III	3	B1, IB3, T2, TP1	150	203	242	60 L	220 L	A	
	Diisobutylamine	3	UN2361	III	3, 8	B1, IB3, T4, TP1	150	203	242	5 L	60 L	A	
	Diisobutylene, isomeric compounds	3	UN2050	II	3	IB2, T4, TP1	150	202	242	5 L	60 L	B	
	Diisooctyl acid phosphate	8	UN1902	III	8	IB3, T4, TP1	154	203	241	5 L	60 L	A	
	Diisopropyl ether	3	UN1159	II	3	IB2, T4, TP1	150	202	242	5 L	60 L	E	40
	Diisopropylamine	3	UN1158	II	3, 8	IB2, T7, TP1	150	202	243	1 L	5 L	B	
	Diisopropylbenzene hydroperoxide, with more than 72 percent in solution	Forbidden											
	Diketene, stabilized	6.1	UN2521	I	6.1, 3	2, B9, B14, B32, B74, T20, TP2, TP13, TP38, TP45	None	227	244	Forbidden	Forbidden	D	26, 27, 40
	1,2-Dimethoxyethane	3	UN2252	II	3	IB2, T4, TP1	150	202	242	5 L	60 L	B	
	1,1-Dimethoxyethane	3	UN2377	II	3	IB2, T7, TP1	150	202	242	5 L	60 L	B	
	Dimethyl carbonate	3	UN1161	II	3	IB2, T4, TP1	150	202	242	5 L	60 L	B	
	Dimethyl chlorothiophosphate, see Dimethyl thiophosphoryl chloride												

2,5-Dimethyl-2,5-dihydroperoxy hexane, with more than 82 percent with water	Forbidden			.....		.....	.....	.....	.....	.....		.....
Dimethyl disulfide	3	UN2381	II	3	IB2, T4, TP1	150	202	242	5 L	60 L	B	40
Dimethyl ether	2.1	UN1033	.....	2.1	T50	306	304	314, 315.	Forbidden	150 kg	B	40
Dimethyl-N-propylamine	3	UN2266	II	3, 8	IB2, T7, TP2, TP13	150	202	243	1 L	5 L	B	40
Dimethyl sulfate	6.1	UN1595	I	6.1, 8	2, B9, B14, B32, B74, B77, T20, TP2, TP13, TP38, TP45	None	227	244	Forbidden	Forbidden	D	40
Dimethyl sulfide	3	UN1164	II	3	IB2, IP8, T7, TP2	150	202	242	5 L	60 L	E	40
Dimethyl thiophosphoryl chloride	6.1	UN2267	II	6.1, 8	IB2, T7, TP2	153	202	243	1 L	30 L	B	25
Dimethylamine, anhydrous	2.1	UN1032	.....	2.1	T50	None	304	314, 315.	Forbidden	150 kg	D	40
Dimethylamine solution	3	UN1160	II	3, 8	IB2, T7, TP1	150	202	243	1 L	5 L	B	.....
2-Dimethylaminoacetonitrile	3	UN2378	II	3, 6.1	IB2, T7, TP1	150	202	243	1 L	60 L	A	52, 40
2-Dimethylaminoethanol	8	UN2051	II	8, 3	B2, IB2, T7, TP2	154	202	243	1 L	30 L	A	.....
2-Dimethylaminoethyl acrylate	6.1	UN3302	II	6.1	IB2, T7, TP2	153	202	243	5 L	60 L	D	25
2-Dimethylaminoethyl methacrylate	6.1	UN2522	II	6.1	IB2, T7, TP2	153	202	243	5 L	60 L	B	40
N,N-Dimethylaniline	6.1	UN2253	II	6.1	IB1, T7, TP2	153	202	243	5 L	60 L	A	.....
2,3-Dimethylbutane	3	UN2457	II	3	IB2, T7, TP1	150	202	242	5 L	60 L	E	.....
1,3-Dimethylbutylamine	3	UN2379	II	3, 8	IB2, T7, TP1	150	202	243	1 L	5 L	B	.....
Dimethylcarbamoyl chloride	8	UN2262	II	8	B2, IB2, T7, TP2	154	202	242	1 L	30 L	A	40
Dimethylcyclohexanes	3	UN2263	II	3	IB2, T4, TP1	150	202	242	5 L	60 L	B	.....
N,N-Dimethylcyclohexylamine	8	UN2264	II	8, 3	B2, IB2, T7, TP2	154	202	243	1 L	30 L	A	40
Dimethyldichlorosilane	3	UN1162	II	3, 8	B77, IB2, T7, TP2, TP13	None	202	243	Forbidden	Forbidden	B	40
Dimethyldiethoxysilane	3	UN2380	II	3	IB2, T4, TP1	150	202	242	5 L	60 L	B	.....
Dimethyldioxanes	3	UN2707	II	3	IB2, T4, TP1	150	202	242	5 L	60 L	B	.....
.....	.....		III	3	B1, IB3, T2, TP1	150	203	242	60 L	220 L	A	.....
N,N-Dimethylformamide	3	UN2265	III	3	B1, IB3, T2, TP2	150	203	242	60 L	220 L	A	.....
Dimethylhexane dihydroperoxide (dry)	Forbidden			.....		.....	.....	.....	.....	.....		.....
Dimethylhydrazine, symmetrical	6.1	UN2382	I	6.1, 3	2, B9, B14, B32, B74, B77, T20, TP2, TP13, TP38, TP45	None	227	244	Forbidden	Forbidden	D	40, 74
Dimethylhydrazine, unsymmetrical	6.1	UN1163	I	6.1, 3, 8.	2, B7, B9, B14, B32, B74, T20, TP2, TP13, TP38, TP45	None	227	244	Forbidden	Forbidden	D	21, 38, 40, 100
2,2-Dimethylpropane	2.1	UN2044	.....	2.1		306	304	314, 315.	Forbidden	150 kg	E	40
Dimethylzinc	4.2	UN1370	I	4.2, 4.3.	B11, B16, T21, TP2, TP7	None	181	244	Forbidden	Forbidden	D	18
Dinitro-o-cresol	6.1	UN1598	II	6.1	IB8, IP2, IP4, T3, TP33	153	212	242	25 kg	100 kg	A	.....
1,3-Dinitro-5,5-dimethyl hydantoin	Forbidden			.....		.....	.....	.....	.....	.....		.....
Dinitro-7,8-dimethylglycoluril (dry)	Forbidden			.....		.....	.....	.....	.....	.....		.....
1,3-Dinitro-4,5-dinitrosobenzene	Forbidden			.....		.....	.....	.....	.....	.....		.....
1,4-Dinitro-1,1,4,4-tetramethylolbutanetetranitrate (dry)	Forbidden			.....		.....	.....	.....	.....	.....		.....
2,4-Dinitro-1,3,5-trimethylbenzene	Forbidden			.....		.....	.....	.....	.....	.....		.....
Dinitroanilines	6.1	UN1596	II	6.1	IB8, IP2, IP4, T3, TP33	153	212	242	25 kg	100 kg	A	91
Dinitrobenzenes, liquid	6.1	UN1597	II	6.1	11, IB2, T7, TP2	153	202	243	5 L	60 L	A	91
.....	.....		III	6.1	11, IB3, T7, TP2	153	203	241	60 L	220 L	A	91
Dinitrobenzenes, solid	6.1	UN3443	II	6.1	IB8, IP2, IP4, T3, TP33	153	212	242	25 kg	100 kg	A	91
Dinitrochlorobenzene, see Chlorodinitrobenzene	.....			.....		.....	.....	.....	.....	.....		.....
1,2-Dinitroethane	Forbidden			.....		.....	.....	.....	.....	.....		.....
1,1-Dinitroethane (dry)	Forbidden			.....		.....	.....	.....	.....	.....		.....
Dinitrogen tetroxide	2.3	UN1067	.....	2.3, 5.1, 8.	1, B7, B14, B45, B46, B61, B66, B67, B77, T50, TP21	None	336	314	Forbidden	Forbidden	D	40, 89, 90
Dinitroglycoluril *or* Dingu	1.1D	UN0489	II	1.1D		None	62	None	Forbidden	Forbidden	10	.....
Dinitromethane	Forbidden			.....		.....	.....	.....	.....	.....		.....
Dinitrophenol, *dry or wetted with less than 15 percent water, by mass*	1.1D	UN0076	II	1.1D, 6.1.		None	62	None	Forbidden	Forbidden	10	5E
Dinitrophenol solutions	6.1	UN1599	II	6.1	IB2, T7, TP2	153	202	243	5 L	60 L	A	36
.....	.....		III	6.1	IB3, T4, TP1	153	203	241	60 L	220 L	A	36
Dinitrophenol, wetted *with not less than 15 percent water, by mass*	4.1	UN1320	I	4.1, 6.1.	23, A8, A19, A20, N41	None	211	None	1 kg	15 kg	E	28, 36
Dinitrophenolates *alkali metals, dry or wetted with less than 15 percent water, by mass*	1.3C	UN0077	II	1.3C, 6.1.		None	62	None	Forbidden	Forbidden	10	5E
Dinitrophenolates, wetted *with not less than 15 percent water, by mass*	4.1	UN1321	I	4.1, 6.1.	23, A8, A19, A20, N41	None	211	None	1 kg	15 kg	E	28, 36

§ 172.101 HAZARDOUS MATERIALS TABLE—Continued

Symbols	Hazardous materials descriptions and proper shipping names	Hazard class or Division	Identification Numbers	PG	Label Codes	Special provisions (§172.102)	(8) Packaging (§173.***) Exceptions	Non-bulk	Bulk	(9) Quantity limitations Passenger aircraft/rail	Cargo aircraft only	(10) Vessel stowage Location	Other
(1)	(2)	(3)	(4)	(5)	(6)	(7)	(8A)	(8B)	(8C)	(9A)	(9B)	(10A)	(10B)
	Dinitropropylene glycol	Forbidden											
	Dinitroresorcinol, *dry or wetted with less than 15 percent water, by mass*	1.1D	UN0078	II	1.1D		None	62	None	Forbidden	Forbidden	10	5E
	2,4-Dinitroresorcinol (heavy metal salts of) (dry)	Forbidden											
	4,6-Dinitroresorcinol (heavy metal salts of) (dry)	Forbidden											
	Dinitroresorcinol, wetted *with not less than 15 percent water, by mass*	4.1	UN1322	I	4.1	23, A8, A19, A20, N41	None	211	None	1 kg	15 kg	E	28, 36
	3,5-Dinitrosalicylic acid (lead salt) (dry)	Forbidden											
	Dinitrosobenzene	1.3C	UN0406	II	1.3C		None	62	None	Forbidden	Forbidden	10	
	Dinitrosobenzylamidine and salts of (dry)	Forbidden											
	2,2-Dinitrostilbene	Forbidden											
	Dinitrotoluenes, *liquid*	6.1	UN2038	II	6.1	IB2, T7, TP2	153	202	243	5 L	60 L	A	
	Dinitrotoluenes, solid	6.1	UN3454	II	6.1	IB8, IP2, IP4, T3, TP33	153	212	242	25 kg	100 kg	A	
	Dinitrotoluenes, molten	6.1	UN1600	II	6.1	T7, TP3	None	202	243	Forbidden	Forbidden	C	
	1,9-Dinitroxy pentamethylene-2,4, 6,8-tetramine (dry)	Forbidden											
	Dioxane	3	UN1165	II	3	IB2, T4, TP1	150	202	242	5 L	60 L	B	
	Dioxolane	3	UN1166	II	3	IB2, T4, TP1	150	202	242	5 L	60 L	B	40
	Dipentene	3	UN2052	III	3	B1, IB3, T2, TP1	150	203	242	60 L	220 L	A	
	Diphenylamine chloroarsine	6.1	UN1698	I	6.1	T6, TP33	None	201	None	Forbidden	Forbidden	D	40
	Diphenylchloroarsine, liquid	6.1	UN1699	I	6.1	A8, B14, B32, N33, N34, T14, TP2, TP13, TP27	None	201	243	Forbidden	30 L	D	40
	Diphenyl-chloroarsine, solid	6.1	UN3450	I	6.1	IB7, IP1, T6, TP33	None	211	242	5 kg	50 kg	D	40
	Diphenyldichlorosilane	8	UN1769	II	8	A7, B2, IB2, N34, T7, TP2, TP13	None	202	242	Forbidden	30 L	C	40
	Diphenylmethyl bromide	8	UN1770	II	8	IB8, IP2, IP4, T3, TP33	154	212	240	15 kg	50 kg	D	40
	Dipicryl sulfide, *dry or wetted with less than 10 percent water, by mass*	1.1D	UN0401	II	1.1D		None	62	None	Forbidden	Forbidden	10	
	Dipicryl sulfide, wetted *with not less than 10 percent water, by mass*	4.1	UN2852	I	4.1	162, A2, N41, N84	None	211	None	Forbidden	0.5 kg	D	28
	Dipicrylamine, *see* Hexanitrodiphenylamine												
	Dipropionyl peroxide, with more than 28 percent in solution	Forbidden											
	Di-n-propyl ether	3	UN2384	II	3	IB2, T4, TP1	150	202	242	5 L	60 L	B	
	Dipropyl ketone	3	UN2710	III	3	B1, IB3, T2, TP1	150	203	242	60 L	220 L	A	
	Dipropylamine	3	UN2383	II	3, 8	IB2, T7, TP1	150	202	243	1 L	5 L	B	
G	Disinfectant, liquid, corrosive, n.o.s.	8	UN1903	I	8	A6, A7, B10, T14, TP2, TP27	None	201	243	0.5 L	2.5 L	B	
G	Disinfectants, liquid, corrosive n.o.s.	8	UN1903	II	8	B2, IB2, T7, TP2	154	202	242	1 L	30 L	B	
				III	8	IB3, T4, TP1	154	203	241	5 L	60 L	A	
G	Disinfectants, liquid, toxic, n.o.s.	6.1	UN3142	I	6.1	A4, T14, TP2, TP27	None	201	243	1 L	30 L	A	40
				II	6.1	IB2, T11, TP2, TP27	153	202	243	5 L	60 L	A	40
				III	6.1	IB3, T7, TP1, TP28	153	203	241	60 L	220 L	A	40
G	Disinfectants, solid, toxic, n.o.s.	6.1	UN1601	I	6.1	IB7, IP1, T6, TP33	None	211	242	5 kg	50 kg	A	40
				II	6.1	IB8, IP2, IP4, T3, TP33	153	212	242	25 kg	100 kg	A	40
				III	6.1	IB8, IP3, T1, TP33	153	213	240	100 kg	200 kg	A	40
	Disodium trioxosilicate	8	UN3253	III	8	IB8, IP3, T1, TP33	154	213	240	25 kg	100 kg	A	
G	Dispersant gases, n.o.s. *see* Refrigerant gases, n.o.s.												
	Divinyl ether, stabilized	3	UN1167	I	3	A7, T11, TP2	None	201	243	1 L	30 L	E	40
	Dodecyltrichlorosilane	8	UN1771	II	8	A7, B2, B6, IB2, N34, T7, TP2, TP13	None	202	242	Forbidden	30 L	C	40
	Dry ice, *see* Carbon dioxide, solid												
G	Dyes, liquid, corrosive, n.o.s. or Dye intermediates, liquid, corrosive, n.o.s.	8	UN2801	I	8	11, A6, B10, T14, TP2, TP27	None	201	243	0.5 L	2.5 L	A	
				II	8	11, B2, IB2, T11, TP2, TP27	154	202	242	1 L	30 L	A	

	.....	.....		III	8	11, IB3, T7, TP1, TP28	154	203	241	5 L	60 L	A	.....
G	Dyes, liquid, toxic, n.o.s. *or* Dye intermediates, liquid, toxic, n.o.s.	6.1	UN1602	I	6.1		None	201	243	1 L	30 L	A	.....
	.....	.....		II	6.1	IB2	153	202	243	5 L	60 L	A	.....
	.....	.....		III	6.1	IB3	153	203	241	60 L	220 L	A	.....
G	Dyes, solid, corrosive, n.o.s. *or* Dye intermediates, solid, corrosive, n.o.s.	8	UN3147	I	8	IB7, IP1, T6, TP33	None	211	242	1 kg	25 kg	A	.....
	.....	.....		II	8	IB8, IP2, IP4, T3, TP33	154	212	240	15 kg	50 kg	A	.....
	.....	.....		III	8	IB8, IP3, T1, TP33	154	213	240	25 kg	100 kg	A	.....
G	Dyes, solid, toxic, n.o.s. *or* Dye intermediates, solid, toxic, n.o.s.	6.1	UN3143	I	6.1	A5, IB7, IP1, T6, TP33	None	211	242	5 kg	50 kg	A	.....
	.....	.....		II	6.1	IB8, IP2, IP4, T3, TP33	153	212	242	25 kg	100 kg	A	.....
	.....	.....		III	6.1	IB8, IP3, T1, TP33	153	213	240	100 kg	200 kg	A	.....
	Dynamite, see Explosive, blasting, type A	.....			.....		.....	.....	.....	.....	.....		.....
	Electrolyte (acid or alkali) for batteries, see Battery fluid, acid *or* Battery fluid, alkali	.....			.....		.....	.....	.....	.....	.....		.....
	Elevated temperature liquid, flammable, n.o.s., *with flash point above 37.8 C, at or above its flash point.*	3	UN3256	III	3	IB1, T3, TP3, TP29	None	None	247	Forbidden	Forbidden	A	.....
	Elevated temperature liquid, n.o.s., *at or above 100 C and below its flash point (including molten metals, molten salts, etc.).*	9	UN3257	III	9	IB1, T3, TP3, TP29	None	None	247	Forbidden	Forbidden	A	85
	Elevated temperature solid, n.o.s., *at or above 240 C, see § 173.247(h)(4)*	9	UN3258	III	9		247(h)(4).	None	247	Forbidden	Forbidden	A	85
	Engines, internal combustion, *flammable gas powered*	9	UN3166	.....	9	135	220	220	220	Forbidden	No limit	A	.....
	Engines, internal combustion, *flammable liquid powered*	9	UN3166	.....	9	135	220	220	220	No limit	No limit	A	.....
G	Environmentally hazardous substances, liquid, n.o.s.	9	UN3082	III	9	8, 146, IB3, T4, TP1, TP29	155	203	241	No limit	No limit	A	.....
G	Environmentally hazardous substances, solid, n.o.s.	9	UN3077	III	9	8, 146, B54, IB8, IP3, N20, T1, TP33	155	213	240	No limit	No limit	A	.....
	Epibromohydrin	6.1	UN2558	I	6.1, 3	T14, TP2, TP13	None	201	243	Forbidden	Forbidden	D	40
+	Epichlorohydrin	6.1	UN2023	II	6.1, 3	IB2, T7, TP2, TP13	153	202	243	5 L	60 L	A	40
	1,2-Epoxy-3-ethoxypropane	3	UN2752	III	3	B1, IB3, T2, TP1	150	203	242	60 L	220 L	A	.....
	Esters, n.o.s.	3	UN3272	II	3	IB2, T7, TP1, TP8, TP28	150	202	242	5 L	60 L	B	.....
	.....	.....		III	3	B1, IB3, T4, TP1, TP29	150	203	242	60 L	220 L	A	.....
	Etching acid, liquid, n.o.s., see Hydrofluoric acid, solution *etc*	.....			.....		.....	.....	.....	.....	.....		.....
	Ethane	2.1	UN1035	.....	2.1		306	304	302	Forbidden	150 kg	E	40
D	Ethane-Propane mixture, refrigerated liquid	2.1	NA1961	.....	2.1	T75, TP5	None	316	314, 315.	Forbidden	Forbidden	D	40
	Ethane, refrigerated liquid	2.1	UN1961	.....	2.1	T75, TP5	None	None	315	Forbidden	Forbidden	D	40
	Ethanol amine dinitrate	Forbidden			.....		.....	.....	.....	.....	.....		.....
	Ethanol *or* Ethyl alcohol *or* Ethanol solutions *or* Ethyl alcohol solutions	3	UN1170	II	3	24, IB2, T4, TP1	150	202	242	5 L	60 L	A	.....
	.....	.....		III	3	24, B1, IB3, T2, TP1	150	203	242	60 L	220 L	A	.....
	Ethanolamine *or* Ethanolamine solutions	8	UN2491	III	8	IB3, T4, TP1	154	203	241	5 L	60 L	A	.....
	Ether, see Diethyl ether	.....			.....		.....	.....	.....	.....	.....		.....
	Ethers, n.o.s.	3	UN3271	II	3	IB2, T7, TP1, TP8, TP28	150	202	242	5 L	60 L	B	.....
	.....	.....		III	3	B1, IB3, T4, TP1, TP29	150	203	242	60 L	220 L	A	.....
	Ethyl acetate	3	UN1173	II	3	IB2, T4, TP1	150	202	242	5 L	60 L	B	.....
	Ethyl acrylate, stabilized	3	UN1917	II	3	IB2, T4, TP1, TP13	150	202	242	5 L	60 L	B	40
	Ethyl alcohol, *see* Ethanol	.....			.....		.....	.....	.....	.....	.....		.....
	Ethyl aldehyde, see Acetaldehyde	.....			.....		.....	.....	.....	.....	.....		.....
	Ethyl amyl ketone	3	UN2271	III	3	B1, IB3, T2, TP1	150	203	242	60 L	220 L	A	.....
	N-Ethylbenzyltoluidines, solid	6.1	UN3460	III	6.1	IB8, IP3, T1, TP33	153	213	240	100 kg	200 kg	A	.....
	N-Ethyl-N-benzylaniline	6.1	UN2274	III	6.1	IB3, T4, TP1	153	203	241	60 L	220 L	A	.....
	Ethyl borate	3	UN1176	II	3	IB2, T4, TP1	150	202	242	5 L	60 L	B	.....
	Ethyl bromide	6.1	UN1891	II	6.1	IB2, IP8, T7, TP2, TP13	153	202	243	5 L	60 L	B	40, 85
	Ethyl bromoacetate	6.1	UN1603	II	6.1, 3	IB2, T7, TP2	None	202	243	Forbidden	Forbidden	D	40
	Ethyl butyl ether	3	UN1179	II	3	B1, IB2, T4, TP1	150	202	242	5 L	60 L	B	.....
	Ethyl butyrate	3	UN1180	III	3	B1, IB3, T2, TP1	150	203	242	60 L	220 L	A	.....
	Ethyl chloride	2.1	UN1037	.....	2.1	B77, T50	None	322	314, 315.	Forbidden	150 kg	B	40
	Ethyl chloroacetate	6.1	UN1181	II	6.1, 3	IB2, T7, TP2	153	202	243	5 L	60 L	A	.....

§ 172.101 HAZARDOUS MATERIALS TABLE—Continued

Symbols	Hazardous materials descriptions and proper shipping names	Hazard class or Division	Identification Numbers	PG	Label Codes	Special provisions (§172.102)	(8) Packaging (§173.***) Exceptions	Non-bulk	Bulk	(9) Quantity limitations Passenger aircraft/rail	Cargo aircraft only	(10) Vessel stowage Location	Other
(1)	(2)	(3)	(4)	(5)	(6)	(7)	(8A)	(8B)	(8C)	(9A)	(9B)	(10A)	(10B)
	Ethyl chloroformate	6.1	UN1182	I	6.1, 3, 8.	2, B9, B14, B32, B74, N34, T20, TP2, TP13, TP38, TP45	None	227	244	Forbidden	Forbidden	D	21, 40, 100
	Ethyl 2-chloropropionate	3	UN2935	III	3	B1, IB3, T2, TP1	150	203	242	60 L	220 L	A	
+	Ethyl chlorothioformate	8	UN2826	II	8, 6.1, 3.	2, B9, B14, B32, B74, T20, TP2, TP38, TP45	None	227	244	Forbidden	Forbidden	A	40
	Ethyl crotonate	3	UN1862	II	3	IB2, T4, TP2	150	202	242	5 L	60 L	B	
	Ethyl ether, *see* Diethyl ether												
	Ethyl fluoride *or* Refrigerant gas R161	2.1	UN2453		2.1		306	304	314, 315.	Forbidden	150 kg	E	40
	Ethyl formate	3	UN1190	II	3	IB2, T4, TP1	150	202	242	5 L	60 L	E	
	Ethyl hydroperoxide	Forbidden											
	Ethyl isobutyrate	3	UN2385	II	3	IB2, T4, TP1	150	202	242	5 L	60 L	B	
+	Ethyl isocyanate	3	UN2481	I	3, 6.1	1, B9, B14, B30, B72, T22, TP2, TP13, TP38, TP44	None	226	244	Forbidden	Forbidden	D	40, 52
	Ethyl lactate	3	UN1192	III	3	B1, IB3, T2, TP1	150	203	242	60 L	220 L	A	
	Ethyl mercaptan	3	UN2363	I	3	A6, T11, TP2, TP13	None	201	243	Forbidden	30 L	E	95, 102
	Ethyl methacrylate, stabilized	3	UN2277	II	3	IB2, T4, TP1	150	202	242	5 L	60 L	B	
	Ethyl methyl ether	2.1	UN1039		2.1		None	201	314, 315.	Forbidden	150 kg	B	40
	Ethyl methyl ketone *or* Methyl ethyl ketone	3	UN1193	II	3	IB2, T4, TP1	150	202	242	5 L	60 L	B	
	Ethyl nitrite solutions	3	UN1194	I	3, 6.1		None	201	None	Forbidden	Forbidden	E	40, 105
	Ethyl orthoformate	3	UN2524	III	3	B1, IB3, T2, TP1	150	203	242	60 L	220 L	A	
	Ethyl oxalate	6.1	UN2525	III	6.1	IB3, T4, TP1	153	203	241	60 L	220 L	A	
	Ethyl perchlorate	Forbidden											
D	Ethyl phosphonothioic dichloride, anhydrous	6.1	NA2927	I	6.1, 8	2, B9, B14, B32, B74, T20, TP4, TP12, TP13, TP38, TP45	None	227	244	Forbidden	Forbidden	D	40
D	Ethyl phosphonous dichloride, anhydrous *pyrophoric liquid*	6.1	NA2845	I	6.1, 4.2.	2, B9, B14, B32, B74, T20, TP4, TP12, TP13, TP38, TP45	None	227	244	Forbidden	Forbidden	D	18
D	Ethyl phosphorodichloridate	6.1	NA2927	I	6.1, 8	2, B9, B14, B32, B74, T20, TP4, TP12, TP13, TP38, TP45	None	227	244	Forbidden	Forbidden	D	40
	Ethyl propionate	3	UN1195	II	3	IB2, T4, TP1	150	202	242	5 L	60 L	B	
	Ethyl propyl ether	3	UN2615	II	3	IB2, T4, TP1	150	202	242	5 L	60 L	E	
	Ethyl silicate, see Tetraethyl silicate												
	Ethylacetylene, stabilized	2.1	UN2452		2.1		None	304	314, 315.	Forbidden	150 kg	B	40
	Ethylamine	2.1	UN1036		2.1	B77, T50	None	321	314, 315.	Forbidden	150 kg	D	40
	Ethylamine, aqueous solution *with not less than 50 percent but not more than 70 percent ethylamine.*	3	UN2270	II	3, 8	IB2, T7, TP1	150	202	243	1 L	5 L	B	40
	N-Ethylaniline	6.1	UN2272	III	6.1	IB3, T4, TP1	153	203	241	60 L	220 L	A	52, 74
	2-Ethylaniline	6.1	UN2273	III	6.1	IB3, T4, TP1	153	203	241	60 L	220 L	A	52, 74
	Ethylbenzene	3	UN1175	II	3	IB2, T4, TP1	150	202	242	5 L	60 L	B	
	N-Ethylbenzyltoluidines liquid	6.1	UN2753	III	6.1	IB3, T7, TP1	153	203	241	60 L	220 L	A	
	2-Ethylbutanol	3	UN2275	III	3	B1, IB3, T2, TP1	150	203	242	60 L	220 L	A	
	2-Ethylbutyl acetate	3	UN1177	III	3	B1, IB3, T2, TP1	150	203	242	60 L	220 L	A	
	2-Ethylbutyraldehyde	3	UN1178	II	3	B1, IB2, T4, TP1	150	202	242	5 L	60 L	B	
	Ethyldichloroarsine	6.1	UN1892	I	6.1	2, B9, B14, B32, B74, T20, TP2, TP13, TP38, TP45	None	227	244	Forbidden	Forbidden	D	40
	Ethyldichlorosilane	4.3	UN1183	I	4.3, 8, 3.	A2, A3, A7, N34, T10, TP2, TP7, TP13	None	201	244	Forbidden	1 L	D	21, 28, 40, 49, 100

Ethylene, acetylene and propylene in mixture, refrigerated liquid *with at least 71.5 percent ethylene with not more than 22.5 percent acetylene and not more than 6 percent propylene.*	2.1	UN3138	.....	2.1	T75, TP5	None	304	314, 315.	Forbidden	Forbidden	D	40, 57
Ethylene chlorohydrin	6.1	UN1135	I	6.1, 3	2, B9, B14, B32, B74, T20, TP2, TP13, TP38, TP45	None	227	244	Forbidden	Forbidden	D	40
Ethylene	2.1	UN1962	.....	2.1		306	304	302	Forbidden	150 kg	E	40
Ethylene diamine diperchlorate	Forbidden			.....		.....	.....	.....	.....	.....		.....
Ethylene dibromide	6.1	UN1605	I	6.1	2, B9, B14, B32, B74, B77, T20, TP2, TP13, TP38, TP45	None	227	244	Forbidden	Forbidden	D	40
Ethylene dibromide and methyl bromide liquid mixtures, see Methyl bromide and ethylene dibromide, liquid mixtures.	.....			.....		.....	.....	.....	.....	.....		.....
Ethylene dichloride	3	UN1184	II	3, 6.1	IB2, N36, T7, TP1	150	202	243	1 L	60 L	B	40
Ethylene glycol diethyl ether	3	UN1153	II	3	IB2, T4, TP1	150	202	242	5 L	60 L	A	.....
.....	.....		III	3	B1, IB3, T2, TP1	150	203	242	60 L	220 L	A	.....
Ethylene glycol dinitrate	Forbidden			.....		.....	.....	.....	.....	.....		.....
Ethylene glycol monoethyl ether	3	UN1171	III	3	B1, IB3, T2, TP1	150	203	242	60 L	220 L	A	.....
Ethylene glycol monoethyl ether acetate	3	UN1172	III	3	B1, IB3, T2, TP1	150	203	242	60 L	220 L	A	.....
Ethylene glycol monomethyl ether	3	UN1188	III	3	B1, IB3, T2, TP1	150	203	242	60 L	220 L	A	.....
Ethylene glycol monomethyl ether acetate	3	UN1189	III	3	B1, IB3, T2, TP1	150	203	242	60 L	220 L	A	.....
Ethylene oxide and carbon dioxide mixture *with more than 87 percent ethylene oxide*	2.3	UN3300	.....	2.3, 2.1.	4	None	304	314, 315.	Forbidden	Forbidden	D	40
Ethylene oxide and carbon dioxide mixtures *with more than 9 percent but not more than 87 percent ethylene oxide.*	2.1	UN1041	.....	2.1	T50	306	304	314, 315.	Forbidden	25 kg	B	40
Ethylene oxide and carbon dioxide mixtures *with not more than 9 percent ethylene oxide*	2.2	UN1952	.....	2.2		306	304	314, 315.	75 kg	150 kg	A	.....
Ethylene oxide and chlorotetrafluoroethane mixture *with not more than 8.8 percent ethylene oxide.*	2.2	UN3297	.....	2.2	T50	306	304	314, 315.	75 kg	150 kg	A	.....
Ethylene oxide and dichlorodifluoromethane mixture, *with not more than 12.5 percent ethylene oxide.*	2.2	UN3070	.....	2.2	T50	306	304	314, 315.	75 kg	150 kg	A	.....
Ethylene oxide and pentafluoroethane mixture *with not more than 7.9 percent ethylene oxide*	2.2	UN3298	.....	2.2	T50	306	304	314, 315.	75 kg	150 kg	A	.....
Ethylene oxide and propylene oxide mixtures*, with not more than 30 percent ethylene oxide*	3	UN2983	I	3, 6.1	5, A11, N4, N34, T14, TP2, TP7, TP13	None	201	243	Forbidden	30 L	E	40
Ethylene oxide and tetrafluoroethane mixture *with not more than 5.6 percent ethylene oxide*	2.2	UN3299	.....	2.2	T50	306	304	314, 315.	75 kg	150 kg	A	.....
Ethylene oxide *or* Ethylene oxide with nitrogen *up to a total pressure of 1MPa (10 bar) at 50 degrees C.*	2.3	UN1040	.....	2.3, 2.1.	4, T50, TP20	None	323	323	Forbidden	Forbidden	D	40
Ethylene, refrigerated liquid *(cryogenic liquid)*	2.1	UN1038	.....	2.1	T75, TP5	None	316	318, 319.	Forbidden	Forbidden	D	40
Ethylenediamine	8	UN1604	II	8, 3	IB2, T7, TP2	154	202	243	1 L	30 L	A	40
Ethyleneimine, stabilized	6.1	UN1185	I	6.1, 3	1, B9, B14, B30, B72, B77, N25, N32, T22, TP2, TP13, TP38, TP44	None	226	244	Forbidden	Forbidden	D	40
Ethylhexaldehyde, see Octyl aldehydes *etc*	.....			.....		.....	.....	.....	.....	.....		.....
2-Ethylhexyl chloroformate	6.1	UN2748	II	6.1, 8	IB2, T7, TP2, TP13	153	202	243	1 L	30 L	A	12, 13, 21, 25, 40, 100
2-Ethylhexylamine	3	UN2276	III	3, 8	B1, IB3, T4, TP1	150	203	242	5 L	60 L	A	40
Ethylphenyldichlorosilane	8	UN2435	II	8	A7, B2, IB2, N34, T7, TP2, TP13	None	202	242	Forbidden	30 L	C	.....
1-Ethylpiperidine	3	UN2386	II	3, 8	IB2, T7, TP1	150	202	243	1 L	5 L	B	.....
N-Ethyltoluidines	6.1	UN2754	II	6.1	IB2, T7, TP2	153	202	243	5 L	60 L	A	.....
Ethyltrichlorosilane	3	UN1196	II	3, 8	A7, IB1, N34, T7, TP2, TP13	150	202	243	1 L	5 L	B	40
Etiologic agent, see Infectious substances, *etc*	.....			.....		.....	.....	.....	.....	.....		.....
Explosive articles, see Articles, explosive , n.o.s. *etc*	.....			.....		.....	.....	.....	.....	.....		.....
Explosive, blasting, type A	1.1D	UN0081	II	1.1D ..		None	62	None	Forbidden	Forbidden	10	21E, 29E
Explosive, blasting, type B	1.1D	UN0082	II	1.1D ..		None	62	None	Forbidden	Forbidden	10	29E
Explosive, blasting, type B *or* Agent blasting, Type B	1.5D	UN0331	II	1.5D ..	105, 106	None	62	None	Forbidden	Forbidden	10	29E
Explosive, blasting, type C	1.1D	UN0083	II	1.1D ..	123	None	62	None	Forbidden	Forbidden	10	22E
Explosive, blasting, type D	1.1D	UN0084	II	1.1D ..		None	62	None	Forbidden	Forbidden	10	.....
Explosive, blasting, type E	1.1D	UN0241	II	1.1D ..		None	62	None	Forbidden	Forbidden	10	19E, 29E
Explosive, blasting, type E *or* Agent blasting, Type E	1.5D	UN0332	II	1.5D ..	105, 106	None	62	None	Forbidden	Forbidden	10	29E
Explosive, forbidden. See § 173.54	Forbidden			.....		.....	.....	.....	.....	.....		.....
Explosive substances, see Substances, explosive, n.o.s. *etc*	.....			.....		.....	.....	.....	.....	.....		.....

§ 172.101 HAZARDOUS MATERIALS TABLE—Continued

Symbols	Hazardous materials descriptions and proper shipping names	Hazard class or Division	Identification Numbers	PG	Label Codes	Special provisions (§172.102)	(8) Packaging (§173.***)			(9) Quantity limitations		(10) Vessel stowage	
							Exceptions	Non-bulk	Bulk	Passenger aircraft/rail	Cargo aircraft only	Location	Other
(1)	(2)	(3)	(4)	(5)	(6)	(7)	(8A)	(8B)	(8C)	(9A)	(9B)	(10A)	(10B)
	Explosives, slurry, see Explosive, blasting, type E												
	Explosives, water gels, see Explosive, blasting, type E												
	Extracts, aromatic, liquid	3	UN1169	II	3	149, IB2, T4, TP1, TP8	150	202	242	5 L	60 L	B	
				III	3	B1, IB3, T2, TP1	150	203	242	60 L	220 L	A	
	Extracts, flavoring, liquid	3	UN1197	II	3	149, IB2, T4, TP1, TP8	150	202	242	5 L	60 L	B	
				III	3	B1, IB3, T2, TP1	150	203	242	60 L	220 L	A	
	Fabric with animal or vegetable oil, see Fibers *or* fabrics, *etc*												
	Ferric arsenate	6.1	UN1606	II	6.1	IB8, IP2, IP4, T3, TP33	153	212	242	25 kg	100 kg	A	
	Ferric arsenite	6.1	UN1607	II	6.1	IB8, IP2, IP4, T3, TP33	153	212	242	25 kg	100 kg	A	
	Ferric chloride, anhydrous	8	UN1773	III	8	IB8, IP3, T1, TP33	154	213	240	25 kg	100 kg	A	
	Ferric chloride, solution	8	UN2582	III	8	B15, IB3, T4, TP1	154	203	241	5 L	60 L	A	
	Ferric nitrate	5.1	UN1466	III	5.1	A1, A29, IB8, IP3, T1, TP33	152	213	240	25 kg	100 kg	A	
	Ferrocerium	4.1	UN1323	II	4.1	59, A19, IB8, IP2, IP4, T3, TP33	151	212	240	15 kg	50 kg	A	
	Ferrosilicon *with 30 percent or more but less than 90 percent silicon*	4.3	UN1408	III	4.3, 6.1.	A1, A19, B6, IB8, IP4, IP7, T1, TP33	151	213	240	25 kg	100 kg	A	13, 40, 52, 53, 85, 103
	Ferrous arsenate	6.1	UN1608	II	6.1	IB8, IP2, IP4, T3, TP33	153	212	242	25 kg	100 kg	A	
D	Ferrous chloride, solid	8	NA1759	II	8	IB8, IP2, IP4, T3, TP33	154	212	240	15 kg	50 kg	A	
D	Ferrous chloride, solution	8	NA1760	II	8	B3, IB2, T11, TP2, TP27	154	202	242	1 L	30 L	B	40
	Ferrous metal borings *or* Ferrous metal shavings *or* Ferrous metal turnings *or* Ferrous metal cuttings *in a form liable to self-heating.*	4.2	UN2793	III	4.2	A1, A19, IB8, IP3, IP7	None	213	241	25 kg	100 kg	A	
	Fertilizer ammoniating solution *with free ammonia*	2.2	UN1043		2.2		306	304	314, 315.	Forbidden	150 kg	E	40
A I W	Fibers, animal *or* Fibers, vegetable *burnt, wet or damp.*	4.2	UN1372	III			151	213	240	Forbidden	Forbidden	A	
I W	Fibers, vegetable, dry	4.1	UN3360		4.1	137	151	213	240	No Limit	No Limit	A	
A W	Fibers *or* Fabrics, animal *or* vegetable *or* Synthetic, n.o.s. *with animal or vegetable oil*	4.2	UN1373	III	4.2	137, IB8, IP3, T1, TP33	None	213	241	Forbidden	Forbidden	A	
	Fibers *or* Fabrics impregnated with weakly nitrated nitrocellulose, n.o.s.	4.1	UN1353	III	4.1	A1, IB8, IP3	None	213	240	25 kg	100 kg	D	
	Films, nitrocellulose base, from which gelatine has been removed; film scrap, see Celluloid scrap.												
	Films, nitrocellulose base, *gelatine coated (except scrap)*	4.1	UN1324	III	4.1		None	183	None	25 kg	100 kg	D	28
	Fire extinguisher charges, *corrosive liquid*	8	UN1774	II	8	N41	154	202	None	1 L	30 L	A	
	Fire extinguisher charges, expelling, explosive, see Cartridges, power device												
	Fire extinguishers *containing compressed or liquefied gas*	2.2	UN1044		2.2	18, 110	309	309	None	75 kg	150 kg	A	
	Firelighters, solid *with flammable liquid*	4.1	UN2623	III	4.1	A1, A19	None	213	None	25 kg	100 kg	A	52
	Fireworks	1.1G	UN0333	II	1.1G	108	None	62	None	Forbidden	Forbidden	07	
	Fireworks	1.2G	UN0334	II	1.2G	108	None	62	None	Forbidden	Forbidden	07	
	Fireworks	1.3G	UN0335	II	1.3G	108	None	62	None	Forbidden	Forbidden	07	
	Fireworks	1.4G	UN0336	II	1.4G	108	None	62	None	Forbidden	75 kg	06	
	Fireworks	1.4S	UN0337	II	1.4S	108	None	62	None	25 kg	100 kg	05	
	First aid kits	9	UN3316		9	15	161	161	None	10 kg	10 kg	A	
W	Fish meal, stabilized *or* Fish scrap, stabilized	9	UN2216	III	None	155, IB8, IP3, T1, TP33	155	218	218	No limit	No limit	B	88, 122, 128
	Fish meal, unstablized *or* Fish scrap, unstabilized	4.2	UN1374	II	4.2	155, A1, A19, IB8, IP2, IP4, T3, TP33	None	212	241	15 kg	50 kg	B	18, 128
	Fissile radioactive materials, see Radioactive material, fissile, n.o.s.												
	Flammable compressed gas, see Compressed *or* Liquefied gas, flammable, *etc*												
	Flammable compressed gas (small receptacles not fitted with a dispersion device, not refillable), see Receptacles, *etc.*												
	Flammable gas in lighters, see Lighters *or* lighter refills, *cigarettes, containing flammable gas*												

G	Flammable liquid, toxic, corrosive, n.o.s.	3	UN3286	I	3, 6.1, 8.	T14, TP2, TP13, TP27	None	201	243	Forbidden	2.5 L	E	21, 40, 100
				II	3, 6.1, 8.	IB2, T11, TP2, TP13, TP27	150	202	243	1 L	5 L	B	21, 40, 100
G	Flammable liquids, corrosive, n.o.s.	3	UN2924	I	3, 8	T14, TP2	None	201	243	0.5 L	2.5 L	E	40
				II	3, 8	IB2, T11, TP2, TP27	150	202	243	1 L	5 L	B	40
				III	3, 8	B1, IB3, T7, TP1, TP28	150	203	242	5 L	60 L	A	40
G	Flammable liquids, n.o.s.	3	UN1993	I	3	T11, TP1, TP27	150	201	243	1 L	30 L	E	
				II	3	IB2, T7, TP1, TP8, TP28	150	202	242	5 L	60 L	B	
				III	3	B1, B52, IB3, T4, TP1, TP29	150	203	242	60 L	220 L	A	
G	Flammable liquids, toxic, n.o.s.	3	UN1992	I	3, 6.1	T14, TP2, TP13, TP27	None	201	243	Forbidden	30 L	E	40
				II	3, 6.1	IB2, T7, TP2, TP13	150	202	243	1 L	60 L	B	40
				III	3, 6.1	B1, IB3, T7, TP1, TP28	150	203	242	60 L	220 L	A	
G	Flammable solid, corrosive, inorganic, n.o.s.	4.1	UN3180	II	4.1, 8	A1, IB6, IP2, T3, TP33	151	212	242	15 kg	50 kg	D	40
				III	4.1, 8	A1, IB6, T1, TP33	151	213	242	25 kg	100 kg	D	40
G	Flammable solid, inorganic, n.o.s.	4.1	UN3178	II	4.1	A1, IB8, IP2, IP4, T3, TP33	151	212	240	15 kg	50 kg	B	
				III	4.1	A1, IB8, IP3, T1, TP33	151	213	240	25 kg	100 kg	B	
G	Flammable solid, organic, molten, n.o.s.	4.1	UN3176	II	4.1	IB1, T3, TP3, TP26	151	212	240	Forbidden	Forbidden	C	
				III	4.1	IB1, T1, TP3, TP26	151	213	240	Forbidden	Forbidden	C	
G	Flammable solid, oxidizing, n.o.s.	4.1	UN3097	II	4.1, 5.1.	131	None	214	214	Forbidden	Forbidden	E	40
				III	4.1, 5.1.	131, T1, TP33	None	214	214	Forbidden	Forbidden	D	40
G	Flammable solid, toxic, inorganic, n.o.s.	4.1	UN3179	II	4.1, 6.1.	A1, IB6, IP2, T3, TP33	151	212	242	15 kg	50 kg	B	40
				III	4.1, 6.1.	A1, IB6, T1, TP33	151	213	242	25 kg	100 kg	B	40
G	Flammable solids, corrosive, organic, n.o.s.	4.1	UN2925	II	4.1, 8	A1, IB6, IP2, T3, TP33	None	212	242	15 kg	50 kg	D	40
				III	4.1, 8	A1, IB6, T1, TP33	151	213	242	25 kg	100 kg	D	40
G	Flammable solids, organic, n.o.s.	4.1	UN1325	II	4.1	A1, IB8, IP2, IP4, T3, TP33	151	212	240	15 kg	50 kg	B	
				III	4.1	A1, IB8, IP3, T1, TP33	151	213	240	25 kg	100 kg	B	
G	Flammable solids, toxic, organic, n.o.s.	4.1	UN2926	II	4.1, 6.1.	A1, IB6, IP2, T3, TP33	151	212	242	15 kg	50 kg	B	40
				III	4.1, 6.1.	A1, IB6, T1, TP33	151	213	242	25 kg	100 kg	B	40
	Flares, aerial	1.3G	UN0093	II	1.3G		None	62	None	Forbidden	75 kg	07	
	Flares, aerial	1.4G	UN0403	II	1.4G		None	62	None	Forbidden	75 kg	06	
	Flares, aerial	1.4S	UN0404	II	1.4S		None	62	None	25 kg	100 kg	05	
	Flares, aerial	1.1G	UN0420	II	1.1G		None	62	None	Forbidden	Forbidden	07	
	Flares, aerial	1.2G	UN0421	II	1.2G		None	62	None	Forbidden	Forbidden	07	
	Flares, airplane, see Flares, aerial												
	Flares, signal, see Cartridges, signal												
	Flares, surface	1.3G	UN0092	II	1.3G		None	62	None	Forbidden	75 kg	07	
	Flares, surface	1.1G	UN0418	II	1.1G		None	62	None	Forbidden	Forbidden	07	
	Flares, surface	1.2G	UN0419	II	1.2G		None	62	None	Forbidden	Forbidden	07	
	Flares, water-activated, see Contrivances, water-activated, *etc*												
	Flash powder	1.1G	UN0094	II	1.1G		None	62	None	Forbidden	Forbidden	15	
	Flash powder	1.3G	UN0305	II	1.3G		None	62	None	Forbidden	Forbidden	15	
	Flue dusts, poisonous, see Arsenical dust												
	Fluoric acid, see Hydrofluoric acid, *etc*												
	Fluorine, compressed	2.3	UN1045		2.3, 5.1, 8.	1	None	302	None	Forbidden	Forbidden	D	40, 89, 90
	Fluoroacetic acid	6.1	UN2642	I	6.1	IB7, IP1, T6, TP33	None	211	242	1 kg	15 kg	E	
	Fluoroanilines	6.1	UN2941	III	6.1	IB3, T4, TP1	153	203	241	60 L	220 L	A	
	Fluorobenzene	3	UN2387	II	3	IB2, T4, TP1	150	202	242	5 L	60 L	B	

§ 172.101 HAZARDOUS MATERIALS TABLE—Continued

Symbols	Hazardous materials descriptions and proper shipping names	Hazard class or Division	Identification Numbers	PG	Label Codes	Special provisions (§172.102)	(8) Packaging (§173.***)			(9) Quantity limitations		(10) Vessel stowage	
							Exceptions	Non-bulk	Bulk	Passenger aircraft/rail	Cargo aircraft only	Location	Other
(1)	(2)	(3)	(4)	(5)	(6)	(7)	(8A)	(8B)	(8C)	(9A)	(9B)	(10A)	(10B)
	Fluoroboric acid	8	UN1775	II	8	A6, A7, B2, B15, IB2, N3, N34, T7, TP2	154	202	242	1 L	30 L	A	
	Fluorophosphoric acid anhydrous	8	UN1776	II	8	A6, A7, B2, IB2, N3, N34, T8, TP2, TP12	None	202	242	1 L	30 L	A	
	Fluorosilicates, n.o.s.	6.1	UN2856	III	6.1	IB8, IP3, T1, TP33	153	213	240	100 kg	200 kg	A	52
	Fluorosilicic acid	8	UN1778	II	8	A6, A7, B2, B15, IB2, N3, N34, T8, TP2, TP12	None	202	242	1 L	30 L	A	
	Fluorosulfonic acid	8	UN1777	I	8	A3, A6, A7, A10, B6, B10, N3, N36, T10, TP2, TP12	None	201	243	0.5 L	2.5 L	D	40
	Fluorotoluenes	3	UN2388	II	3	IB2, T4, TP1	150	202	242	5 L	60 L	B	40
	Forbidden materials. See § 173.21	Forbidden											
	Formaldehyde, solutions, flammable	3	UN1198	III	3, 8	B1, IB3, T4, TP1	150	203	242	5 L	60 L	A	40
	Formaldehyde, solutions, *with not less than 25 percent formaldehyde*	8	UN2209	III	8	IB3, T4, TP1	154	203	241	5 L	60 L	A	
	Formalin, see Formaldehyde, solutions												
	Formic acid	8	UN1779	II	8	B2, B28, IB2, T7, TP2	154	202	242	1 L	30 L	A	40
	Fracturing devices, explosive, *without detonators for oil wells*	1.1D	UN0099	II	1.1D		None	62	None	Forbidden	Forbidden	07	
	Fuel, aviation, turbine engine	3	UN1863	I	3	144, T11, TP1, TP8, TP28	150	201	243	1 L	30 L	E	
				II	3	144, IB2, T4, TP1, TP8	150	202	242	5 L	60 L	B	
				III	3	144, B1, IB3, T2, TP1	150	203	242	60 L	220 L	A	
D	Fuel oil *(No. 1, 2, 4, 5, or 6)*	3	NA1993	III	3	144, B1, IB3, T4, TP1, TP29	150	203	242	60 L	220 L	A	
	Fuel system components (including fuel control units (FCU), carburetors, fuel lines, fuel pumps) see Dangerous Goods in Apparatus *or* Dangerous Goods in Machinery.												
	Fulminate of mercury (dry)	Forbidden											
	Fulminate of mercury, wet, see Mercury fulminate, *etc*												
	Fulminating gold	Forbidden											
	Fulminating mercury	Forbidden											
	Fulminating platinum	Forbidden											
	Fulminating silver	Forbidden											
	Fulminic acid	Forbidden											
	Fumaryl chloride	8	UN1780	II	8	B2, IB2, T7, TP2	154	202	242	1 L	30 L	C	8, 40
	Fumigated lading, see §§ 172.302(g), 173.9 and 176.76(h)												
	Fumigated transport vehicle or freight container see 173.9												
	Furaldehydes	6.1	UN1199	II	6.1, 3	IB2, T7, TP2	153	202	243	5 L	60 L	A	
	Furan	3	UN2389	I	3	T12, TP2, TP13	None	201	243	1 L	30 L	E	40
	Furfuryl alcohol	6.1	UN2874	III	6.1	IB3, T4, TP1	153	203	241	60 L	220 L	A	52, 74
	Furfurylamine	3	UN2526	III	3, 8	B1, IB3, T4, TP1	150	203	242	5 L	60 L	A	40
	Fuse, detonating, *metal clad, see* Cord, detonating, *metal clad*												
	Fuse, detonating, mild effect, *metal clad, see* Cord, detonating, mild effect, *metal clad*												
	Fuse, igniter *tubular metal clad*	1.4G	UN0103	II	1.4G		None	62	None	Forbidden	75 kg	06	
	Fuse, non-detonating *instantaneous or quickmatch*	1.3G	UN0101	II	1.3G		None	62	None	Forbidden	Forbidden	07	
	Fuse, safety	1.4S	UN0105	II	1.4S		None	62	None	25 kg	100 kg	05	
D	Fusee (*railway or highway*)	4.1	NA1325	II	4.1		None	184	None	15 kg	50 kg	B	
	Fusel oil	3	UN1201	II	3	IB2, T4, TP1	150	202	242	5 L	60 L	B	
				III	3	B1, IB3, T2, TP1	150	203	242	60 L	220 L	A	
	Fuses, tracer, see Tracers for ammunition												
	Fuzes, combination, percussion and time, see Fuzes, detonating *(UN0257, UN0367);* Fuzes, igniting *(UN0317, UN0368).*												
	Fuzes, detonating	1.1B	UN0106	II	1.1B		None	62	None	Forbidden	Forbidden	11	
	Fuzes, detonating	1.2B	UN0107	II	1.2B		None	62	None	Forbidden	Forbidden	11	
	Fuzes, detonating	1.4B	UN0257	II	1.4B	116	None	62	None	Forbidden	75 kg	06	
	Fuzes, detonating	1.4S	UN0367	II	1.4S	116	None	62	None	25 kg	100 kg	05	
	Fuzes, detonating, *with protective features*	1.1D	UN0408	II	1.1D		None	62	None	Forbidden	Forbidden	07	
	Fuzes, detonating, *with protective features*	1.2D	UN0409	II	1.2D		None	62	None	Forbidden	Forbidden	07	
	Fuzes, detonating, *with protective features*	1.4D	UN0410	II	1.4D	116	None	62	None	Forbidden	75 kg	06	

	Fuzes, igniting	1.3G	UN0316	II	1.3G		None	62	None	Forbidden	Forbidden	07	
	Fuzes, igniting	1.4G	UN0317	II	1.4G		None	62	None	Forbidden	75 kg	06	
	Fuzes, igniting	1.4S	UN0368	II	1.4S		None	62	None	25 kg	100 kg	05	
	Galactsan trinitrate	Forbidden											
	Gallium	8	UN2803	III	8	T1, TP33	None	162	240	20 kg	20 kg	B	48
	Gas cartridges, *(flammable) without a release device, non-refillable*	2.1	UN2037		2.1		306	304	None	1 kg	15 kg	B	40
	Gas generator assemblies (aircraft), *containing a non-flammable non-toxic gas and a propellant cartridge.*	2.2			2.2		None	335	None	75 kg	150 kg	A	
D	Gas identification set	2.3	NA9035		2.3	6	None	194	None	Forbidden	Forbidden	D	
	Gas oil	3	UN1202	III	3	144, B1, IB3, T2, TP1	150	203	242	60 L	220 L	A	
G	Gas, refrigerated liquid, flammable, n.o.s. *(cryogenic liquid)*	2.1	UN3312		2.1	T75, TP5	None	316	318	Forbidden	Forbidden	D	40
G	Gas, refrigerated liquid, n.o.s. *(cryogenic liquid)*	2.2	UN3158		2.2	T75, TP5	320	316	318	50 kg	500 kg	D	
G	Gas, refrigerated liquid, oxidizing, n.o.s. *(cryogenic liquid)*	2.2	UN3311		2.2, 5.1.	T75, TP5, TP22	320	316	318	Forbidden	Forbidden	D	
	Gas sample, non-pressurized, flammable, n.o.s., *not refrigerated liquid*	2.1	UN3167		2.1		306	302, 304.	None	1 L	5 L	D	
	Gas sample, non-pressurized, toxic, flammable, n.o.s., *not refrigerated liquid*	2.3	UN3168		2.3, 2.1.	6	306	302	None	Forbidden	1 L	D	
	Gas sample, non-pressurized, toxic, n.o.s., *not refrigerated liquid*	2.3	UN3169		2.3	6	306	302, 304.	None	Forbidden	1 L	D	
D	Gasohol *gasoline mixed with ethyl alcohol, with not more than 20 percent alcohol*	3	NA1203	II	3	144	150	202	242	5 L	60 L	E	
	Gasoline	3	UN1203	II	3	139, B33, B101, T8	150	202	242	5 L	60 L	E	
	Gasoline, casinghead, see Gasoline												
	Gelatine, blasting, see Explosive, blasting, type A												
	Gelatine dynamites, see Explosive, blasting, type A												
	Germane	2.3	UN2192		2.3, 2.1.	2	None	302	245	Forbidden	Forbidden	D	40
	Glycerol-1,3-dinitrate	Forbidden											
	Glycerol gluconate trinitrate	Forbidden											
	Glycerol lactate trinitrate	Forbidden											
	Glycerol alpha-monochlorohydrin	6.1	UN2689	III	6.1	IB3, T4, TP1	153	203	241	60 L	220 L	A	
	Glyceryl trinitrate, see Nitroglycerin, *etc*												
	Glycidaldehyde	3	UN2622	II	3, 6.1	IB2, IP8, T7, TP1	150	202	243	1 L	60 L	A	40
	Grenades, *hand or rifle, with bursting charge*	1.1D	UN0284	II	1.1D			62	None	Forbidden	Forbidden	07	
	Grenades, *hand or rifle, with bursting charge*	1.2D	UN0285	II	1.2D			62	None	Forbidden	Forbidden	07	
	Grenades, *hand or rifle, with bursting charge*	1.1F	UN0292	II	1.1F			62	None	Forbidden	Forbidden	08	
	Grenades, *hand or rifle, with bursting charge*	1.2F	UN0293	II	1.2F			62	None	Forbidden	Forbidden	08	
	Grenades, illuminating, see Ammunition, illuminating, *etc*												
	Grenades, practice, *hand or rifle*	1.4S	UN0110	II	1.4S			62	None	25 kg	100 kg	05	
	Grenades, practice, *hand or rifle*	1.3G	UN0318	II	1.3G			62	None	Forbidden	Forbidden	07	
	Grenades, practice, *hand or rifle*	1.2G	UN0372	II	1.2G			62	None	Forbidden	Forbidden	07	
	Grenades practice *Hand or rifle*	1.4G	UN0452	II	1.4G			62	None	Forbidden	75 kg	06	
	Grenades, smoke, see Ammunition, smoke, *etc*												
	Guanidine nitrate	5.1	UN1467	III	5.1	A1, IB8, IP3, T1, TP33	152	213	240	25 kg	100 kg	A	73
	Guanyl nitrosaminoguanylidene hydrazine (dry)	Forbidden											
	Guanyl nitrosaminoguanylidene hydrazine, wetted *with not less than 30 percent water, by mass*	1.1A	UN0113	II	1.1A	111, 117	None	62	None	Forbidden	Forbidden	12	
	Guanyl nitrosaminoguanyltetrazene (dry)	Forbidden											
	Guanyl nitrosaminoguanyltetrazene, wetted *or* Tetrazene, wetted *with not less than 30 percent water or mixture of alcohol and water, by mass.*	1.1A	UN0114	II	1.1A	111, 117	None	62	None	Forbidden	Forbidden	12	
	Gunpowder, compressed *or* Gunpowder in pellets, *see* Black powder *(UN 0028)*												
	Gunpowder, *granular or as a meal, see* Black powder *(UN 0027)*												
	Hafnium powder, dry	4.2	UN2545	I	4.2		None	211	242	Forbidden	Forbidden	D	
				II	4.2	A19, A20, IB6, IP2, N34, T3, TP33	None	212	241	15 kg	50 kg	D	
				III	4.2	IB8, IP3, T1, TP33	None	213	241	25 kg	100 kg	D	
	Hafnium powder, wetted *with not less than 25 percent water (a visible excess of water must be present) (a) mechanically produced, particle size less than 53 microns; (b) chemically produced, particle size less than 840 microns.*	4.1	UN1326	II	4.1	A6, A19, A20, IB6, IP2, N34, T3, TP33	None	212	241	15 kg	50 kg	E	74
	Hand signal device, see Signal devices, hand												
	Hazardous substances, liquid or solid, n.o.s., see Environmentally hazardous substances, *etc*												
D G	Hazardous waste, liquid, n.o.s.	9	NA3082	III	9	IB3, T2, TP1	155	203	241	No limit	No limit	A	
D G	Hazardous waste, solid, n.o.s.	9	NA3077	III	9	B54, IB8, IP2, T1, TP33	155	213	240	No limit	No limit	A	
	Heating oil, light	3	UN1202	III	3	B1, IB3, T2, TP1	150	203	242	60 L	220 L	A	
	Helium, compressed	2.2	UN1046		2.2		306	302	302, 314.	75 kg	150 kg	A	85
	Helium-oxygen mixture, see Rare gases and oxygen mixtures												
	Helium, refrigerated liquid *(cryogenic liquid)*	2.2	UN1963		2.2	T75, TP5	320	316	318	50 kg	500 kg	B	
	Heptafluoropropane *or* Refrigerant gas R 227	2.2	UN3296		2.2	T50	306	304	314, 315.	75 kg	150 kg	A	

§ 172.101 HAZARDOUS MATERIALS TABLE—Continued

Symbols	Hazardous materials descriptions and proper shipping names	Hazard class or Division	Identification Numbers	PG	Label Codes	Special provisions (§172.102)	(8) Packaging (§173.***)			(9) Quantity limitations		(10) Vessel stowage	
							Exceptions	Non-bulk	Bulk	Passenger aircraft/rail	Cargo aircraft only	Location	Other
(1)	(2)	(3)	(4)	(5)	(6)	(7)	(8A)	(8B)	(8C)	(9A)	(9B)	(10A)	(10B)
	n-Heptaldehyde	3	UN3056	III	3	B1, IB3, T2, TP1	150	203	242	60 L	220 L	A	
	Heptanes	3	UN1206	II	3	IB2, T4, TP1	150	202	242	5 L	60 L	B	
	n-Heptene	3	UN2278	II	3	IB2, T4, TP1	150	202	242	5 L	60 L	B	
	Hexachloroacetone	6.1	UN2661	III	6.1	IB3, T4, TP1	153	203	241	60 L	220 L	B	12, 40
	Hexachlorobenzene	6.1	UN2729	III	6.1	B3, IB8, IP3, T1, TP33	153	203	241	60 L	220 L	A	
	Hexachlorobutadiene	6.1	UN2279	III	6.1	IB3, T4, TP1	153	203	241	60 L	220 L	A	
	Hexachlorocyclopentadiene	6.1	UN2646	I	6.1	2, B9, B14, B32, B74, B77, T20, TP2, TP13, TP38, TP45	None	227	244	Forbidden	Forbidden	D	40
	Hexachlorophene	6.1	UN2875	III	6.1	IB8, IP3, T1, TP33	153	213	240	100 kg	200 kg	A	
	Hexadecyltrichlorosilane	8	UN1781	II	8	A7, B2, B6, IB2, N34, T7, TP2	None	202	242	Forbidden	30 L	C	40
	Hexadienes	3	UN2458	II	3	IB2, T4, TP1	None	202	242	5 L	60 L	B	
	Hexaethyl tetraphosphate and compressed gas mixtures	2.3	UN1612		2.3	3	None	334	None	Forbidden	Forbidden	D	40
	Hexaethyl tetraphosphate, *liquid*	6.1	UN1611	II	6.1	IB2, N76, T7, TP2	153	202	243	5 L	60 L	E	40
	Hexaethyl tetraphosphate, *solid*	6.1	UN1611	II	6.1	IB8, IP2, IP4, N76	153	212	242	25 kg	100 kg	E	40
	Hexafluoroacetone	2.3	UN2420		2.3, 8	2, B9, B14	None	304	314, 315.	Forbidden	Forbidden	D	40
	Hexafluoroacetone hydrate, liquid	6.1	UN2552	II	6.1	IB2, T7, TP2	153	202	243	5 L	60 L	B	40
	Hexafluoroacetone hydrate, solid	6.1	UN3436	II	6.1	IB8, IP2, IP4, T3, TP33	153	212	242	25 kg	100 kg	B	40
	Hexafluoroethane, *or* Refrigerant gas R 116	2.2	UN2193		2.2		306	304	314, 315.	75 kg	150 kg	A	
	Hexafluorophosphoric acid	8	UN1782	II	8	A6, A7, B2, IB2, N3, N34, T8, TP2, TP12	None	202	242	1 L	30 L	A	
	Hexafluoropropylene compressed *or* Refrigerant gas R 1216	2.2	UN1858		2.2	T50	306	304	314, 315.	75 kg	150 kg	A	
	Hexaldehyde	3	UN1207	III	3	B1, IB3, T2, TP1	150	203	242	60 L	220 L	A	
	Hexamethylene diisocyanate	6.1	UN2281	II	6.1	IB2, T7, TP2, TP13	153	202	243	5 L	60 L	C	13, 40
	Hexamethylene triperoxide diamine (dry)	Forbidden											
	Hexamethylenediamine, solid	8	UN2280	III	8	IB8, IP3, T1, TP33	154	213	240	25 kg	100 kg	A	12
	Hexamethylenediamine solution	8	UN1783	II	8	IB2, T7, TP2	None	202	242	1 L	30 L	A	
				III	8	IB3, T4, TP1	154	203	241	5 L	60 L	A	
	Hexamethyleneimine	3	UN2493	II	3, 8	IB2, T7, TP1	150	202	243	1 L	5 L	B	40
	Hexamethylenetetramine	4.1	UN1328	III	4.1	A1, IB8, IP3, T1, TP33	151	213	240	25 kg	100 kg	A	
	Hexamethylol benzene hexanitrate	Forbidden											
	Hexanes	3	UN1208	II	3	IB2, T4, TP1	150	202	242	5 L	60 L	E	
	2,2',4,4',6,6'- Hexanitro-3,3'-dihydroxyazobenzene (dry)	Forbidden											
	Hexanitroazoxy benzene	Forbidden											
	N,N'-(hexanitrodiphenyl) ethylene dinitramine (dry)	Forbidden											
	Hexanitrodiphenyl urea	Forbidden											
	2,2',3',4,4',6-Hexanitrodiphenylamine	Forbidden											
	Hexanitrodiphenylamine *or* Dipicrylamine *or* Hexyl	1.1D	UN0079	II	1.1D		None	62	None	Forbidden	Forbidden	10	
	2,3',4,4',6,6'-Hexanitrodiphenylether	Forbidden											
	Hexanitroethane	Forbidden											
	Hexanitrooxanilide	Forbidden											
	Hexanitrostilbene	1.1D	UN0392	II	1.1D		None	62	None	Forbidden	Forbidden	10	
	Hexanoic acid, see Corrosive liquids, n.o.s.												
	Hexanols	3	UN2282	III	3	B1, IB3, T2, TP1	150	203	242	60 L	220 L	A	74
	1-Hexene	3	UN2370	II	3	IB2, T4, TP1	150	202	242	5 L	60 L	E	
	Hexogen and cyclotetramethylenetetranitramine mixtures, wetted *or* desensitized *see* RDX and HMX mixtures, wetted *or* desensitized *etc.*												
	Hexogen and HMX mixtures, wetted *or* desensitized *see* RDX and HMX mixtures, wetted *or* desensitized *etc.*												
	Hexogen and octogen mixtures, wetted *or* desensitized *see* RDX and HMX mixtures, wetted *or* desensitized *etc.*												

Hexogen, *see* Cyclotrimethylenetrinitramine, *etc*													
Hexolite, *or* Hexotol *dry or wetted with less than 15 percent water, by mass*	1.1D	UN0118	II	1.1D		None	62	None	Forbidden	Forbidden	10	
Hexotonal	1.1D	UN0393	II	1.1D		None	62	None	Forbidden	Forbidden	10	
Hexyl, *see* Hexanitrodiphenylamine												
Hexyltrichlorosilane	8	UN1784	II	8	A7, B2, B6, IB2, N34, T7, TP2, TP13	None	202	242	Forbidden	30 L	C	40
High explosives, see individual explosives' entries												
HMX, *see* Cyclotetramethylenete tranitramine, *etc*												
Hydrazine, anhydrous	8	UN2029	I	8, 3, 6.1.	A3, A6, A7, A10, B7, B16, B53	None	201	243	Forbidden	2.5 L	D	40, 125
Hydrazine, aqueous solution *with not more than 37 percent hydrazine, by mass*	6.1	UN3293	III	6.1	IB3, T4, TP1	153	203	241	60 L	220 L	A	
Hydrazine azide	Forbidden											
Hydrazine chlorate	Forbidden											
Hydrazine dicarbonic acid diazide	Forbidden											
Hydrazine aqueous solution, *with more than 37% hydrazine, by mass*	8	UN2030	I	8, 6.1	151, B16, B53, T10, TP2, TP13	None	201	243	Forbidden	2.5 L	D	40
			II	8, 6.1	B16, B53, IB2, T7, TP2, TP13	None	202	243	Forbidden	30 L	D	40
			III	8, 6.1	B16, B53, IB3, T4, TP1	154	203	241	5 L	60 L	D	40
Hydrazine perchlorate	Forbidden											
Hydrazine selenate	Forbidden											
Hydriodic acid, anhydrous, see Hydrogen iodide, anhydrous												
Hydriodic acid	8	UN1787	II	8	A3, A6, B2, IB2, N41, T7, TP2	154	202	242	1 L	30 L	C	
			III	8	IB3, T4, TP1	154	203	241	5 L	60 L	C	8
Hydrobromic acid, anhydrous, see Hydrogen bromide, anhydrous												
Hydrobromic acid, *with more than 49 percent hydrobromic acid*	8	UN1788	II	8	B2, B15, IB2, N41, T7, TP2	154	202	242	Forbidden	Forbidden	C	
			III	8	IB3, T4, TP1	154	203	241	Forbidden	Forbidden	C	8
Hydrobromic acid, *with not more than 49 percent hydrobromic acid*	8	UN1788	II	8	A3, A6, B2, B15, IB2, N41, T7, TP2	154	202	242	1 L	30 L	C	
			III	8	A3, IB3, T4, TP1	154	203	241	5 L	60 L	C	8
Hydrocarbon gas mixture, compressed, n.o.s.	2.1	UN1964		2.1		306	302	314, 315.	Forbidden	150 kg	E	40
Hydrocarbon gas mixture, liquefied, n.o.s.	2.1	UN1965		2.1	T50	306	304	314, 315.	Forbidden	150 kg	E	40
Hydrocarbons, liquid, n.o.s.	3	UN3295	I	3	144, T11, TP1, TP8, TP28	150	201	243	1 L	30 L	E	
			II	3	144, IB2, T7, TP1, TP8, TP28	150	202	242	5 L	60 L	B	
			III	3	144, B1, IB3, T4, TP1, TP29	150	203	242	60 L	220 L	A	
Hydrochloric acid, anhydrous, see Hydrogen chloride, anhydrous												
Hydrochloric acid	8	UN1789	II	8	A3, A6, B3, B15, IB2, N41, T8, TP2, TP12	154	202	242	1 L	30 L	C	
			III	8	A3, IB3, T4, TP1, TP12	154	203	241	5 L	60 L	C	8
Hydrocyanic acid, anhydrous, see Hydrogen cyanide *etc*												
Hydrocyanic acid, aqueous solutions *or* Hydrogen cyanide, aqueous solutions *with not more than 20 percent hydrogen cyanide.*	6.1	UN1613	I	6.1	2, B61, B65, B77, B82, T20, TP2, TP13	None	195	244	Forbidden	Forbidden	D	40
D Hydrocyanic acid, aqueous solutions *with less than 5 percent hydrogen cyanide*	6.1	NA1613	II	6.1	IB1, T14, TP2, TP13, TP27	None	195	243	Forbidden	5 L	D	40
Hydrocyanic acid, liquefied, see Hydrogen cyanide, *etc*												
Hydrocyanic acid (prussic), unstabilized	Forbidden											
Hydrofluoric acid and Sulfuric acid mixtures	8	UN1786	I	8, 6.1	A6, A7, B15, B23, N5, N34, T10, TP2, TP12, TP13	None	201	243	Forbidden	2.5 L	D	40
Hydrofluoric acid, anhydrous, see Hydrogen fluoride, anhydrous												
Hydrofluoric acid, *with more than 60 percent strength*	8	UN1790	I	8, 6.1	A6, A7, B4, B15, B23, N5, N34, T10, TP2, TP12, TP13	None	201	243	0.5 L	2.5 L	D	12, 40
Hydrofluoric acid, *with not more than 60 percent strength*	8	UN1790	II	8, 6.1	A6, A7, B15, IB2, N5, N34, T8, TP2, TP12	154	202	243	1 L	30 L	D	12, 40
Hydrofluoroboric acid, see Fluoroboric acid												
Hydrofluorosilicic acid, see Fluorosilicic acid												

§ 172.101 HAZARDOUS MATERIALS TABLE—Continued

Symbols	Hazardous materials descriptions and proper shipping names	Hazard class or Division	Identification Numbers	PG	Label Codes	Special provisions (§172.102)	(8) Packaging (§173.***)			(9) Quantity limitations		(10) Vessel stowage	
							Exceptions	Non-bulk	Bulk	Passenger aircraft/rail	Cargo aircraft only	Location	Other
(1)	(2)	(3)	(4)	(5)	(6)	(7)	(8A)	(8B)	(8C)	(9A)	(9B)	(10A)	(10B)
	Hydrogen and Methane mixtures, compressed	2.1	UN2034		2.1		306	302	302, 314, 315.	Forbidden	150 kg	E	40, 57
	Hydrogen bromide, anhydrous	2.3	UN1048		2.3, 8	3, B14	None	304	314, 315.	Forbidden	Forbidden	D	40
	Hydrogen chloride, anhydrous	2.3	UN1050		2.3, 8	3	None	304	None	Forbidden	Forbidden	D	40
	Hydrogen chloride, refrigerated liquid	2.3	UN2186		2.3, 8	3, B6	None	None	314, 315.	Forbidden	Forbidden	B	40
	Hydrogen, compressed	2.1	UN1049		2.1		306	302	302, 314.	Forbidden	150 kg	E	40, 57
	Hydrogen cyanide, solution in alcohol *with not more than 45 percent hydrogen cyanide*	6.1	UN3294	I	6.1, 3	2, B9, B14, B32, B74, T20, TP2, TP13, TP38, TP45	None	227	244	Forbidden	Forbidden	D	40
	Hydrogen cyanide, stabilized *with less than 3 percent water*	6.1	UN1051	I	6.1, 3	1, B35, B61, B65, B77, B82	None	195	244	Forbidden	Forbidden	D	40
	Hydrogen cyanide, stabilized, *with less than 3 percent water and absorbed in a porous inert material.*	6.1	UN1614	I	6.1	5	None	195	None	Forbidden	Forbidden	D	25, 40
	Hydrogen fluoride, anhydrous	8	UN1052	I	8, 6.1	3, B7, B46, B71, B77, T10, TP2	None	163	243	Forbidden	Forbidden	D	40
	Hydrogen in a metal hydride storage system	2.1	UN3468		2.1	167	None	214	None	Forbidden	Forbidden	D	
	Hydrogen iodide, anhydrous	2.3	UN2197		2.3	3, B14	None	304	314, 315.	Forbidden	Forbidden	D	40
	Hydrogen iodide solution, see Hydriodic acid, solution												
	Hydrogen peroxide and peroxyacetic acid mixtures, stabilized *with acids, water and not more than 5 percent peroxyacetic acid.*	5.1	UN3149	II	5.1, 8	145, A2, A3, A6, B53, IB2, IP5, T7, TP2, TP6, TP24	None	202	243	1 L	5 L	D	25, 66, 75
	Hydrogen peroxide, aqueous solutions *with more than 40 percent but not more than 60 percent hydrogen peroxide (stabilized as necessary).*	5.1	UN2014	II	5.1, 8	12, B53, B80, B81, B85, IB2, T7, TP2, TP6, TP24, TP37	None	202	243	Forbidden	Forbidden	D	25, 66, 75
	Hydrogen peroxide, aqueous solutions *with not less than 20 percent but not more than 40 percent hydrogen peroxide (stabilized as necessary).*	5.1	UN2014	II	5.1, 8	A2, A3, A6, B53, IB2, IP5, T7, TP2, TP6, TP24, TP37	None	202	243	1 L	5 L	D	25, 66, 75
	Hydrogen peroxide, aqueous solutions *with not less than 8 percent but less than 20 percent hydrogen peroxide (stabilized as necessary).*	5.1	UN2984	III	5.1	A1, IB2, IP5, T4, TP1, TP6, TP24, TP37	152	203	241	2.5 L	30 L	B	25, 66, 75
	Hydrogen peroxide, stabilized *or* Hydrogen peroxide aqueous solutions, stabilized *with more than 60 percent hydrogen peroxide.*	5.1	UN2015	I	5.1, 8	12, B53, B80, B81, B85, T10, TP2, TP6, TP24, TP37	None	201	243	Forbidden	Forbidden	D	25, 66, 75
	Hydrogen, refrigerated liquid *(cryogenic liquid)*	2.1	UN1966		2.1	T75, TP5	None	316	318, 319.	Forbidden	Forbidden	D	40
	Hydrogen selenide, anhydrous	2.3	UN2202		2.3, 2.1.	1	None	192	245	Forbidden	Forbidden	D	40
	Hydrogen sulfate, see Sulfuric acid												
	Hydrogen sulfide	2.3	UN1053		2.3, 2.1.	2, B9, B14	None	304	314, 315.	Forbidden	Forbidden	D	40
	Hydrogendifluorides, n.o.s.	8	UN1740	II	8	IB8, IP2, IP4, N3, N34, T3, TP33	None	212	240	15 kg	50 kg	A	25, 40, 52
				III	8	IB8, IP3, N3, N34, T1, TP33	154	213	240	25 kg	100 kg	A	25, 40, 52
	Hydroquinone, solid	6.1	UN2662	III	6.1	IB8, IP3, T1, TP33	153	213	240	100 kg	200 kg	A	
	Hydroquinone solution	6.1	UN3435	III	6.1	IB3, T4, TP1	153	203	241	60 L	220 L	A	
	Hydrosilicofluoric acid, see Fluorosilicic acid												
	Hydroxyl amine iodide	Forbidden											
	Hydroxylamine sulfate	8	UN2865	III	8	IB8, IP3, T1, TP33	154	213	240	25 kg	100 kg	A	

	Hypochlorite solutions	8	UN1791	II	8	A7, B2, B15, IB2, IP5, N34, T7, TP2, TP24	154	202	242	1 L	30 L	B	26
				III	8	IB3, N34, T4, TP2, TP24	154	203	241	5 L	60 L	B	26
	Hypochlorites, inorganic, n.o.s.	5.1	UN3212	II	5.1	A9, IB8, IP2, IP4, T3, TP33	152	212	240	5 kg	25 kg	D	4, 48, 52, 56, 58, 69, 106, 116 118
	Hyponitrous acid	Forbidden											
	Igniter fuse, metal clad, see Fuse, *igniter, tubular, metal clad*												
	Igniters	1.1G	UN0121	II	1.1G		None	62	None	Forbidden	Forbidden	07	
	Igniters	1.2G	UN0314	II	1.2G		None	62	None	Forbidden	Forbidden	07	
	Igniters	1.3G	UN0315	II	1.3G		None	62	None	Forbidden	Forbidden	07	
	Igniters	1.4G	UN0325	II	1.4G		None	62	None	Forbidden	75 kg	06	
	Igniters	1.4S	UN0454	II	1.4S		None	62	None	25 kg	100 kg	05	
	3,3'-Iminodipropylamine	8	UN2269	III	8	IB3, T4, TP2	154	203	241	5 L	60 L	A	
G	Infectious substances, affecting animals *only*	6.2	UN2900		6.2	A81, A82	134	196	None	50 mL or 50 g	4 L or 4 kg	B	40
G	Infectious substances, affecting humans	6.2	UN2814		6.2	A81, A82	134	196	None	50 mL or 50 g	4 L or 4 kg	B	40
	Inflammable, see Flammable												
	Initiating explosives (dry)	Forbidden											
	Inositol hexanitrate (dry)	Forbidden											
G	Insecticide gases, n.o.s.	2.2	UN1968		2.2		306	304	314, 315.	75 kg	150 kg	A	
G	Insecticide gases, flammable, n.o.s.	2.1	UN3354		2.1	T50	306	304	314, 315.	Forbidden	150 kg	D	40
G	Insecticide gases, toxic, flammable, n.o.s. *Inhalation hazard Zone A*	2.3	UN3355		2.3, 2.1.	1	None	192	245	Forbidden	Forbidden	D	40
G	Insecticide gases, toxic, flammable, n.o.s. *Inhalation hazard Zone B*	2.3	UN3355		2.3, 2.1.	2, B9, B14	None	302, 305.	314, 315.	Forbidden	Forbidden	D	40
G	Insecticide gases, toxic, flammable, n.o.s. *Inhalation hazard Zone C*	2.3	UN3355		2.3, 2.1.	3, B14	None	302, 305.	314, 315.	Forbidden	Forbidden	D	
G	Insecticide gases, toxic, flammable, n.o.s. *Inhalation hazard Zone D*	2.3	UN3355		2.3, 2.1.	4	None	302, 305.	314, 315.	Forbidden	Forbidden	D	
G	Insecticide gases, toxic, n.o.s.	2.3	UN1967		2.3	3	None	193, 334.	245	Forbidden	Forbidden	D	40
	Inulin trinitrate (dry)	Forbidden											
	Iodine azide (dry)	Forbidden											
	Iodine monochloride	8	UN1792	II	8	B6, IB8, IP2, IP4, N41, T7, TP2	None	212	240	Forbidden	50 kg	D	40, 66, 74, 89, 90
	Iodine pentafluoride	5.1	UN2495	I	5.1, 6.1, 8.		None	205	243	Forbidden	Forbidden	D	25, 40, 52, 66, 90
	2-Iodobutane	3	UN2390	II	3	IB2, T4, TP1	150	202	242	5 L	60 L	B	
	Iodomethylpropanes	3	UN2391	II	3	IB2, T4, TP1	150	202	242	5 L	60 L	B	
	Iodopropanes	3	UN2392	III	3	B1, IB3, T2, TP1	150	203	242	60 L	220 L	A	
	Iodoxy compounds (dry)	Forbidden											
	Iridium nitratopentamine iridium nitrate	Forbidden											
	Iron chloride, see Ferric chloride												
	Iron oxide, spent, *or* Iron sponge, spent *obtained from coal gas purification*	4.2	UN1376	III	4.2	B18, IB8, IP3, T1, TP33	None	213	240	Forbidden	Forbidden	E	
	Iron pentacarbonyl	6.1	UN1994	I	6.1, 3	1, B9, B14, B30, B72, B77, T22, TP2, TP13, TP38, TP44	None	226	244	Forbidden	Forbidden	D	40
	Iron sesquichloride, see Ferric chloride												
	Irritating material, see Tear gas substances, *etc*												
	Isobutane *see also* Petroleum gases, liquefied	2.1	UN1969		2.1	19, T50	306	304	314, 315.	Forbidden	150 kg	E	40
	Isobutanol *or* Isobutyl alcohol	3	UN1212	III	3	B1, IB3, T2, TP1	150	203	242	60 L	220 L	A	
	Isobutyl acetate	3	UN1213	II	3	IB2, T4, TP1	150	202	242	5 L	60 L	B	
	Isobutyl acrylate, stabilized	3	UN2527	III	3	B1, IB3, T2, TP1	150	203	242	60 L	220 L	A	
	Isobutyl alcohol, *see* Isobutanol												
	Isobutyl aldehyde, *see* Isobutyraldehyde												
D	Isobutyl chloroformate	6.1	NA2742	I	6.1, 3, 8.	2, B9, B14, B32, B74, T20, TP4, TP12, TP13, TP38, TP45	None	227	244	1 L	30 L	A	12, 13, 22, 25, 40, 48, 100
	Isobutyl formate	3	UN2393	II	3	IB2, T4, TP1	150	202	242	5 L	60 L	B	
	Isobutyl isobutyrate	3	UN2528	III	3	B1, IB3, T2, TP1	150	203	242	60 L	220 L	A	

§ 172.101 HAZARDOUS MATERIALS TABLE—Continued

Symbols	Hazardous materials descriptions and proper shipping names	Hazard class or Division	Identification Numbers	PG	Label Codes	Special provisions (§172.102)	(8) Packaging (§173.***) Exceptions	Non-bulk	Bulk	(9) Quantity limitations Passenger aircraft/rail	Cargo aircraft only	(10) Vessel stowage Location	Other
(1)	(2)	(3)	(4)	(5)	(6)	(7)	(8A)	(8B)	(8C)	(9A)	(9B)	(10A)	(10B)
+	Isobutyl isocyanate	3	UN2486	I	3, 6.1	1, B9, B14, B30, B72, T22, TP2, TP13, TP27	None	226	244	Forbidden	Forbidden	D	40
	Isobutyl methacrylate, stabilized	3	UN2283	III	3	B1, IB3, T2, TP1	150	203	242	60 L	220 L	A	
	Isobutyl propionate	3	UN2394	III	3	B1, IB3, T2, TP1	150	203	242	60 L	220 L	B	
	Isobutylamine	3	UN1214	II	3, 8	IB2, T7, TP1	150	202	243	1 L	5 L	B	40
	Isobutylene *see also* Petroleum gases, liquefied	2.1	UN1055		2.1	19, T50	306	304	314, 315.	Forbidden	150 kg	E	40
	Isobutyraldehyde *or* Isobutyl aldehyde	3	UN2045	II	3	IB2, T4, TP1	150	202	242	5 L	60 L	E	40
	Isobutyric acid	3	UN2529	III	3, 8	B1, IB3, T4, TP1	150	203	242	5 L	60 L	A	
	Isobutyronitrile	3	UN2284	II	3, 6.1	IB2, T7, TP2, TP13	150	202	243	1 L	60 L	E	40
	Isobutyryl chloride	3	UN2395	II	3, 8	IB1, T7, TP2	150	202	243	1 L	5 L	C	40
G	Isocyanates, flammable, toxic, n.o.s. *or* Isocyanate solutions, flammable, toxic, n.o.s. *flash point less than 23 degrees C.*	3	UN2478	II	3, 6.1	5, A3, A7, IB2, T11, TP2, TP13, TP27	150	202	243	1 L	60 L	D	40
				III	3, 6.1	5, A3, A7, IB3, T7, TP1, TP13, TP28	150	203	242	60 L	220 L	A	
G	Isocyanates, toxic, flammable, n.o.s. *or* Isocyanate solutions, toxic, flammable, n.o.s., *flash point not less than 23 degrees C but not more than 61 degrees C and boiling point less than 300 degrees C.*	6.1	UN3080	II	6.1, 3	IB2, T11, TP2, TP13, TP27	153	202	243	5 L	60 L	B	25, 40, 48
G	Isocyanates, toxic, n.o.s. *or* Isocyanate solutions, toxic, n.o.s., *flash point more than 61 degrees C and boiling point less than 300 degrees C.*	6.1	UN2206	II	6.1	IB2, T11, TP2, TP13, TP27	153	202	243	5 L	60 L	E	25, 40, 48
				III	6.1	IB3, T7, TP1, TP13, TP28	153	203	241	60 L	220 L	E	25, 40, 48
	Isocyanatobenzotrifluorides	6.1	UN2285	II	6.1, 3	5, IB2, T7, TP2	153	202	243	5 L	60 L	D	25, 40, 48
	Isoheptenes	3	UN2287	II	3	IB2, T4, TP1	150	202	242	5 L	60 L	B	
	Isohexenes	3	UN2288	II	3	IB2, IP8, T11, TP1	150	202	242	5 L	60 L	E	
	Isooctane, see Octanes												
	Isooctenes	3	UN1216	II	3	IB2, T4, TP1	150	202	242	5 L	60 L	B	
	Isopentane, see Pentane												
	Isopentanoic acid, see Corrosive liquids, n.o.s.												
	Isopentenes	3	UN2371	I	3	T11, TP2	150	201	243	1 L	30 L	E	
	Isophorone diisocyanate	6.1	UN2290	III	6.1	IB3, T4, TP2	153	203	241	60 L	220 L	B	40
	Isophoronediamine	8	UN2289	III	8	IB3, T4, TP1	154	203	241	5 L	60 L	A	
	Isoprene, stabilized	3	UN1218	I	3	T11, TP2	150	201	243	1 L	30 L	E	
	Isopropanol *or* Isopropyl alcohol	3	UN1219	II	3	IB2, T4, TP1	150	202	242	5 L	60 L	B	
	Isopropenyl acetate	3	UN2403	II	3	IB2, T4, TP1	150	202	242	5 L	60 L	B	
	Isopropenylbenzene	3	UN2303	III	3	B1, IB3, T2, TP1	150	203	242	60 L	220 L	A	
	Isopropyl acetate	3	UN1220	II	3	IB2, T4, TP1	150	202	242	5 L	60 L	B	
	Isopropyl acid phosphate	8	UN1793	III	8	IB2, T4, TP1	154	213	240	25 kg	100 kg	A	
	Isopropyl alcohol, *see* Isopropanol												
	Isopropyl butyrate	3	UN2405	III	3	B1, IB3, T2, TP1	150	203	242	60 L	220 L	A	
	Isopropyl chloroacetate	3	UN2947	III	3	B1, IB3, T2, TP1	150	203	242	60 L	220 L	A	
	Isopropyl chloroformate	6.1	UN2407	I	6.1, 3, 8.	2, B9, B14, B32, B74, B77, T20, TP2, TP13, TP38, TP44	None	227	244	Forbidden	Forbidden	B	40
	Isopropyl 2-chloropropionate	3	UN2934	III	3	B1, IB3, T2, TP1	150	203	242	60 L	220 L	A	
	Isopropyl isobutyrate	3	UN2406	II	3	IB2, T4, TP1	150	202	242	5 L	60 L	B	
+	Isopropyl isocyanate	3	UN2483	I	3, 6.1	1, B9, B14, B30, B72, T22, TP2, TP13, TP38, TP44	None	226	244	Forbidden	Forbidden	D	40
	Isopropyl mercaptan, see Propanethiols												
	Isopropyl nitrate	3	UN1222	II	3	IB99	150	202	None	5 L	60 L	D	
	Isopropyl phosphoric acid, see Isopropyl acid phosphate												
	Isopropyl propionate	3	UN2409	II	3	IB2, T4, TP1	150	202	242	5 L	60 L	B	
	Isopropylamine	3	UN1221	I	3, 8	T11, TP2	None	201	243	0.5 L	2.5 L	E	
	Isopropylbenzene	3	UN1918	III	3	B1, IB3, T2, TP1	150	203	242	60 L	220 L	A	
	Isopropylcumyl hydroperoxide, with more than 72 percent in solution	Forbidden											

	Isosorbide dinitrate mixture *with not less than 60 percent lactose, mannose, starch or calcium hydrogen phosphate.*	4.1	UN2907	II	4.1	IB6, IP2, N85	None	212	None	15 kg	50 kg	E	28, 36
	Isosorbide-5-mononitrate	4.1	UN3251	III	4.1	66, IB8	151	213	240	Forbidden	Forbidden	D	12
	Isothiocyanic acid	Forbidden											
	Jet fuel, see Fuel aviation, turbine engine												
D	Jet perforating guns, charged oil well, with detonator	1.1D	NA0124	II	1.1D	55, 56	None	62	None	Forbidden	Forbidden	07	
D	Jet perforating guns, charged oil well, with detonator	1.4D	NA0494	II	1.4D	55, 56	None	62	None	Forbidden	Forbidden	06	
	Jet perforating guns, charged *oil well, without detonator*	1.1D	UN0124	II	1.1D	55	None	62	None	Forbidden	Forbidden	07	
	Jet perforating guns, charged, *oil well, without detonator*	1.4D	UN0494	II	1.4D	55, 114	None	62	None	Forbidden	300 kg	06	
	Jet perforators, see Charges, shaped, *etc*												
	Jet tappers, without detonator, see Charges, shaped, *etc*												
	Jet thrust igniters, for rocket motors or Jato, see Igniters												
	Jet thrust unit (Jato), see Rocket motors												
	Kerosene	3	UN1223	III	3	144, B1, IB3, T2, TP2	150	203	242	60 L	220 L	A	
G	Ketones, liquid, n.o.s.	3	UN1224	I	3	T11, TP1, TP8, TP27	None	201	243	1 L	30 L	E	
				II	3	IB2, T7, TP1, TP8, TP28	150	202	242	5 L	60 L	B	
				III	3	B1, IB3, T4, TP1, TP29	150	203	242	60 L	220 L	A	
	Krypton, compressed	2.2	UN1056		2.2		306	302	None	75 kg	150 kg	A	
	Krypton, refrigerated liquid *(cryogenic liquid)*	2.2	UN1970		2.2	T75, TP5	320	None	None	50 kg	500 kg	B	
	Lacquer base or lacquer chips, nitrocellulose, dry, see Nitrocellulose, *etc. (UN 2557)*												
	Lacquer base or lacquer chips, plastic, wet with alcohol or solvent, see Nitrocellulose *(UN2059, UN2555, UN2556, UN2557) or* Paint *etc.(UN1263).*												
	Lead acetate	6.1	UN1616	III	6.1	IB8, IP3, T1, TP33	153	213	240	100 kg	200 kg	A	
	Lead arsenates	6.1	UN1617	II	6.1	IB8, IP2, IP4, T3, TP33	153	212	242	25 kg	100 kg	A	
	Lead arsenites	6.1	UN1618	II	6.1	IB8, IP2, IP4, T3, TP33	153	212	242	25 kg	100 kg	A	
	Lead azide (dry)	Forbidden											
	Lead azide, wetted *with not less than 20 percent water or mixture of alcohol and water, by mass.*	1.1A	UN0129	II	1.1A	111, 117	None	62	None	Forbidden	Forbidden	12	
	Lead compounds, soluble, n.o.s.	6.1	UN2291	III	6.1	138, IB8, IP3, T1, TP33	153	213	240	100 kg	200 kg	A	
	Lead cyanide	6.1	UN1620	II	6.1	IB8, IP2, IP4, T3, TP33	153	212	242	25 kg	100 kg	A	52
	Lead dioxide	5.1	UN1872	III	5.1	A1, IB8, IP3, T1, TP33	152	213	240	25 kg	100 kg	A	
	Lead dross, see Lead sulfate, *with more than 3 percent free acid*												
	Lead nitrate	5.1	UN1469	II	5.1, 6.1.	IB8, IP2, IP4, T3, TP33	152	212	242	5 kg	25 kg	A	
	Lead nitroresorcinate (dry)	Forbidden											
	Lead perchlorate, solid	5.1	UN1470	II	5.1, 6.1.	IB6, IP2, T3, TP33	152	212	242	5 kg	25 kg	A	56, 58
	Lead perchlorate, solution	5.1	UN3408	III	5.1, 6.1.	IB2, T4, TP1	152	203	242	2.5 L	30 L	A	56, 58
				II	5.1, 6.1.	IB2, T4, TP1	152	202	243	1 L	5 L	A	56, 58
	Lead peroxide, see Lead dioxide												
	Lead phosphite, dibasic	4.1	UN2989	II	4.1	IB8, IP2, IP4, T3, TP33	None	212	240	5 kg	25 kg	B	34
				III	4.1	IB8, IP3, T1, TP33	151	213	240	15 kg	50 kg	B	34
	Lead picrate (dry)	Forbidden											
	Lead styphnate (dry)	Forbidden											
	Lead styphnate, wetted *or* Lead trinitroresorcinate, wetted *with not less than 20 percent water or mixture of alcohol and water, by mass.*	1.1A	UN0130	II	1.1A	111, 117	None	62	None	Forbidden	Forbidden	12	
	Lead sulfate *with more than 3 percent free acid*	8	UN1794	II	8	IB8, IP2, IP4, T3, TP33	154	212	240	15 kg	50 kg	A	
	Lead trinitroresorcinate, *see* Lead styphnate, *etc*												
	Life-saving appliances, not self inflating *containing dangerous goods as equipment*	9	UN3072		None		None	219	None	No limit	No limit	A	
	Life-saving appliances, self inflating	9	UN2990		None		None	219	None	No limit	No limit	A	
	Lighter replacement cartridges containing liquefied petroleum gases (and similar devices, each not exceeding 65 grams), see Lighters *or* lighter refills *etc. containing flammable gas.*												
	Lighters, fuse	1.4S	UN0131	II	1.4S		None	62	None	25 kg	100 kg	05	
	Lighters *or* Lighter refills *containing flammable gas*	2.1	UN1057		2.1	N10	None	21, 308	None	1 kg	15 kg	B	40
	Lime, unslaked, see Calcium oxide												
G	Liquefied gas, flammable, n.o.s.	2.1	UN3161		2.1	T50	306	304	314, 315.	Forbidden	150 kg	D	40
G	Liquefied gas, n.o.s.	2.2	UN3163		2.2	T50	306	304	314, 315.	75 kg	150 kg	A	
G	Liquefied gas, oxidizing, n.o.s.	2.2	UN3157		2.2, 5.1.	A14	306	304	314, 315.	75 kg	150 kg	D	

§ 172.101 HAZARDOUS MATERIALS TABLE—Continued

Symbols	Hazardous materials descriptions and proper shipping names	Hazard class or Division	Identification Numbers	PG	Label Codes	Special provisions (§172.102)	(8) Packaging (§173.***)			(9) Quantity limitations		(10) Vessel stowage	
							Exceptions	Non-bulk	Bulk	Passenger aircraft/rail	Cargo aircraft only	Location	Other
(1)	(2)	(3)	(4)	(5)	(6)	(7)	(8A)	(8B)	(8C)	(9A)	(9B)	(10A)	(10B)
G I	Liquefied gas, toxic, corrosive, n.o.s. *Inhalation Hazard Zone A*	2.3	UN3308		2.3, 8	1	None	192	245	Forbidden	Forbidden	D	40
G I	Liquefied gas, toxic, corrosive, n.o.s. *Inhalation Hazard Zone B*	2.3	UN3308		2.3, 8	2, B9, B14	None	304	314, 315.	Forbidden	Forbidden	D	40
G I	Liquefied gas, toxic, corrosive, n.o.s. *Inhalation Hazard Zone C*	2.3	UN3308		2.3, 8	3, B14	None	304	314, 315.	Forbidden	Forbidden	D	40
G I	Liquefied gas, toxic, corrosive, n.o.s. *Inhalation Hazard Zone D*	2.3	UN3308		2.3, 8	4	None	304	314, 315.	Forbidden	Forbidden	D	40
G I	Liquefied gas, toxic, flammable, corrosive, n.o.s. *Inhalation Hazard Zone A*	2.3	UN3309		2.3, 2.1, 8.	1	None	192	245	Forbidden	Forbidden	D	17, 40
G I	Liquefied gas toxic, flammable, corrosive, n.o.s. *Inhalation Hazard Zone B*	2.3	UN3309		2.3, 2.1, 8.	2, B9, B14	None	304	314, 315.	Forbidden	Forbidden	D	17, 40
G I	Liquefied gas, toxic, flammable, corrosive, n.o.s. *Inhalation Hazard Zone C*	2.3	UN3309		2.3, 2.1, 8.	3, B14	None	304	314, 315.	Forbidden	Forbidden	D	17, 40
G I	Liquefied gas, toxic, flammable, corrosive, n.o.s. *Inhalation Hazard Zone D*	2.3	UN3309		2.3, 2.1, 8.	4	None	304	314, 315.	Forbidden	Forbidden	D	17, 40
G	Liquefied gas, toxic, flammable, n.o.s. *Inhalation Hazard Zone A*	2.3	UN3160		2.3, 2.1.	1	None	192	245	Forbidden	Forbidden	D	40
G	Liquefied gas, toxic, flammable, n.o.s. *Inhalation Hazard Zone B*	2.3	UN3160		2.3, 2.1.	2, B9, B14	None	304	314, 315.	Forbidden	Forbidden	D	40
G	Liquefied gas, toxic, flammable, n.o.s. *Inhalation Hazard Zone C*	2.3	UN3160		2.3, 2.1.	3, B14	None	304	314, 315.	Forbidden	Forbidden	D	40
G	Liquefied gas, toxic, flammable, n.o.s. *Inhalation Hazard Zone D*	2.3	UN3160		2.3, 2.1.	4	None	304	314, 315.	Forbidden	Forbidden	D	40
G	Liquefied gas, toxic, n.o.s. *Inhalation Hazard Zone A*	2.3	UN3162		2.3	1	None	192	245	Forbidden	Forbidden	D	40
G	Liquefied gas, toxic, n.o.s. *Inhalation Hazard Zone B*	2.3	UN3162		2.3	2, B9, B14	None	304	314, 315.	Forbidden	Forbidden	D	40
G	Liquefied gas, toxic, n.o.s. *Inhalation Hazard Zone C*	2.3	UN3162		2.3	3, B14	None	304	314, 315.	Forbidden	Forbidden	D	40
G	Liquefied gas, toxic, n.o.s. *Inhalation Hazard Zone D*	2.3	UN3162		2.3	4	None	304	314, 315.	Forbidden	Forbidden	D	40
G I	Liquefied gas, toxic, oxidizing, corrosive, n.o.s. *Inhalation Hazard Zone A*	2.3	UN3310		2.3, 5.1, 8.	1	None	192	245	Forbidden	Forbidden	D	40, 89, 90
G I	Liquefied gas, toxic, oxidizing, corrosive, n.o.s. *Inhalation Hazard Zone B*	2.3	UN3310		2.3, 5.1, 8.	2, B9, B14	None	304	314, 315.	Forbidden	Forbidden	D	40, 89, 90
G I	Liquefied gas, toxic, oxidizing, corrosive, n.o.s. *Inhalation Hazard Zone C*	2.3	UN3310		2.3, 5.1, 8.	3, B14	None	304	314, 315.	Forbidden	Forbidden	D	40, 89, 90
G I	Liquefied gas, toxic, oxidizing, corrosive, n.o.s. *Inhalation Hazard Zone D*	2.3	UN3310		2.3, 5.1, 8.	4	None	304	314, 315.	Forbidden	Forbidden	D	40, 89, 90
G	Liquefied gas, toxic, oxidizing, n.o.s. *Inhalation Hazard Zone A*	2.3	UN3307		2.3, 5.1.	1	None	192	245	Forbidden	Forbidden	D	40
G	Liquefied gas, toxic, oxidizing, n.o.s. *Inhalation Hazard Zone B*	2.3	UN3307		2.3, 5.1.	2, B9, B14	None	304	314, 315.	Forbidden	Forbidden	D	40
G	Liquefied gas, toxic, oxidizing, n.o.s. *Inhalation Hazard Zone C*	2.3	UN3307		2.3, 5.1.	3, B14	None	304	314, 315.	Forbidden	Forbidden	D	40
G	Liquefied gas, toxic, oxidizing, n.o.s. *Inhalation Hazard Zone D*	2.3	UN3307		2.3, 5.1.	4	None	304	314, 315.	Forbidden	Forbidden	D	40
	Liquefied gases, *non-flammable charged with nitrogen, carbon dioxide or air*	2.2	UN1058		2.2		306	304	None	75 kg	150 kg	A	
	Liquefied hydrocarbon gas, see Hydrocarbon gas mixture, liquefied, n.o.s.												
	Liquefied natural gas, see Methane, *etc. (UN 1972)*												
	Liquefied petroleum gas *see* Petroleum gases, liquefied												
	Lithium	4.3	UN1415	I	4.3	A7, A19, IB4, IP1, N45	None	211	244	Forbidden	15 kg	E	52
	Lithium acetylide ethylenediamine complex, see Water reactive solid *etc*												
	Lithium alkyls, liquid	4.2	UN2445	I	4.2, 4.3.	B11, T21, TP2, TP7	None	181	244	Forbidden	Forbidden	D	
	Lithium alkyls, solid	4.2	UN3433	I	4.2, 4.3.	B11, T21, TP7, TP33	None	181	244	Forbidden	Forbidden	D	

Lithium aluminum hydride	4.3	UN1410	I	4.3	A19	None	211	242	Forbidden	15 kg	E	52
Lithium aluminum hydride, ethereal	4.3	UN1411	I	4.3, 3	A2, A3, A11, N34	None	201	244	Forbidden	1 L	D	40
Lithium batteries, contained in equipment	9	UN3091	II	9	29, A54, A55, A102, A104	185	185	None	5 kg	5 kg	A	
Lithium batteries packed with equipment	9	UN3091	II	9	29, A54, A55, A101, A103	185	185	None	5 kg gross	35 kg gross	A	
Lithium battery	9	UN3090	II	9	29, A54, A55, A100	185	185	None	5 kg gross	35 kg gross	A	
Lithium borohydride	4.3	UN1413	I	4.3	A19, N40	None	211	242	Forbidden	15 kg	E	52
Lithium ferrosilicon	4.3	UN2830	II	4.3	A19, IB7, IP2, T3, TP33	151	212	241	15 kg	50 kg	E	40, 85, 103
Lithium hydride	4.3	UN1414	I	4.3	A19, N40	None	211	242	Forbidden	15 kg	E	52
Lithium hydride, fused solid	4.3	UN2805	II	4.3	A8, A19, A20, IB4, T3, TP33	151	212	241	15 kg	50 kg	E	52
Lithium hydroxide	8	UN2680	II	8	IB8, IP2, IP4, T3, TP33	154	212	240	15 kg	50 kg	A	
Lithium hydroxide, solution	8	UN2679	II	8	B2, IB2, T7, TP2	154	202	242	1 L	30 L	A	29
			III	8	IB3, T4, TP2	154	203	241	5 L	60 L	A	29, 96
Lithium hypochlorite, dry *with more than 39% available chlorine (8.8% available oxygen) or* Lithium hypochlorite mixtures, dry *with more than 39% available chlorine (8.8% available oxygen).*	5.1	UN1471	II	5.1	A9, IB8, IP2, IP4, N34	152	212	240	5 kg	25 kg	A	4, 48, 52, 56, 58, 69, 106, 116
Lithium in cartridges, see Lithium												
Lithium nitrate	5.1	UN2722	III	5.1	A1, IB8, IP3, T1, TP33	152	213	240	25 kg	100 kg	A	
Lithium nitride	4.3	UN2806	I	4.3	A19, IB4, IP1, N40	None	211	242	Forbidden	15 kg	E	
Lithium peroxide	5.1	UN1472	II	5.1	A9, IB6, IP2, N34, T3, TP33	152	212	None	5 kg	25 kg	A	13, 52, 66, 75
Lithium silicon	4.3	UN1417	II	4.3	A19, A20, IB7, IP2, T3, TP33	151	212	241	15 kg	50 kg	A	85, 103
LNG, see Methane *etc. (UN 1972)*												
London purple	6.1	UN1621	II	6.1	IB8, IP2, IP4, T3, TP33	153	212	242	25 kg	100 kg	A	
LPG, see Petroleum gases, liquefied												
Lye, see Sodium hydroxide, solutions												
Magnesium alkyls	4.2	UN3053	I	4.2, 4.3.	B11, T21, TP2, TP7	None	181	244	Forbidden	Forbidden	D	18
Magnesium aluminum phosphide	4.3	UN1419	I	4.3, 6.1.	A19, N34, N40	None	211	242	Forbidden	15 kg	E	40, 52, 85
+ Magnesium arsenate	6.1	UN1622	II	6.1	IB8, IP2, IP4, T3, TP33	153	212	242	25 kg	100 kg	A	
Magnesium bisulfite solution, see Bisulfites, aqueous solutions, n.o.s.												
Magnesium bromate	5.1	UN1473	II	5.1	A1, IB8, IP4, T3, TP33	152	212	242	5 kg	25 kg	A	56, 58
Magnesium chlorate	5.1	UN2723	II	5.1	IB8, IP2, IP4, T3, TP33	152	212	242	5 kg	25 kg	A	56, 58
Magnesium diamide	4.2	UN2004	II	4.2	A8, A19, A20, IB6, T3, TP33	None	212	241	15 kg	50 kg	C	
Magnesium diphenyl	4.2	UN2005	I	4.2	T21, TP7, TP33	None	187	244	Forbidden	Forbidden	C	
Magnesium dross, wet or hot	Forbidden											
Magnesium fluorosilicate	6.1	UN2853	III	6.1	IB8, IP3, T1, TP33	153	213	240	100 kg	200 kg	A	52
Magnesium granules, coated, *particle size not less than 149 microns*	4.3	UN2950	III	4.3	A1, A19, IB8, IP4, T1, TP33	151	213	240	25 kg	100 kg	A	52
Magnesium hydride	4.3	UN2010	I	4.3	A19, N40	None	211	242	Forbidden	15 kg	E	52
Magnesium *or* Magnesium alloys *with more than 50 percent magnesium in pellets, turnings or ribbons.*	4.1	UN1869	III	4.1	A1, IB8, IP3, T1, TP33	151	213	240	25 kg	100 kg	A	39, 52, 53, 74, 101
Magnesium nitrate	5.1	UN1474	III	5.1	A1, IB8, IP3, T1, TP33	152	213	240	25 kg	100 kg	A	
Magnesium perchlorate	5.1	UN1475	II	5.1	IB6, IP2, T3, TP33	152	212	242	5 kg	25 kg	A	56, 58
Magnesium peroxide	5.1	UN1476	II	5.1	IB6, IP2, T3, TP33	152	212	242	5 kg	25 kg	A	13, 52, 66, 75
Magnesium phosphide	4.3	UN2011	I	4.3, 6.1.	A19, N40	None	211	None	Forbidden	15 kg	E	40, 52, 85
Magnesium, powder *or* Magnesium alloys, powder	4.3	UN1418	I	4.3, 4.2.	A19, B56	None	211	244	Forbidden	15 kg	A	39, 52
			II	4.3, 4.2.	A19, B56, IB5, IP2, T3, TP33	None	212	241	15 kg	50 kg	A	39, 52
			III	4.3, 4.2.	A19, B56, IB8, IP4, T1, TP33	None	213	241	25 kg	100 kg	A	39, 52

§ 172.101 HAZARDOUS MATERIALS TABLE—Continued

Symbols	Hazardous materials descriptions and proper shipping names	Hazard class or Division	Identification Numbers	PG	Label Codes	Special provisions (§172.102)	(8) Packaging (§173.***) Exceptions	Non-bulk	Bulk	(9) Quantity limitations Passenger aircraft/rail	Cargo aircraft only	(10) Vessel stowage Location	Other
(1)	(2)	(3)	(4)	(5)	(6)	(7)	(8A)	(8B)	(8C)	(9A)	(9B)	(10A)	(10B)
	Magnesium scrap, see Magnesium, *etc. (UN 1869)*												
	Magnesium silicide	4.3	UN2624	II	4.3	A19, A20, IB7, IP2, T3, TP33	151	212	241	15 kg	50 kg	B	85, 103
	Magnetized material, see § 173.21												
	Maleic anhydride	8	UN2215	III	8	IB8, IP3, T1, TP33	154	213	240	25 kg	100 kg	A	
	Maleic anhydride, molten	8	UN2215	III	8	T4, TP3	None	213	240	Forbidden	Forbidden	A	
	Malononitrile	6.1	UN2647	II	6.1	IB8, IP2, IP4, T3, TP33	153	212	242	25 kg	100 kg	A	12
	Mancozeb (manganese ethylenebisdithiocarbamate complex with zinc) see Maneb												
	Maneb *or* Maneb preparations *with not less than 60 percent maneb*	4.2	UN2210	III	4.2, 4.3.	57, A1, A19, IB6, T1, TP33	None	213	242	25 kg	100 kg	A	34
	Maneb stabilized *or* Maneb preparations, stabilized *against self-heating*	4.3	UN2968	III	4.3	54, A1, A19, IB8, IP4, T1, TP33	151	213	242	25 kg	100 kg	B	34, 52
	Manganese nitrate	5.1	UN2724	III	5.1	A1, IB8, IP3, T1, TP33	152	213	240	25 kg	100 kg	A	
	Manganese resinate	4.1	UN1330	III	4.1	A1, IB6, T1, TP33	151	213	240	25 kg	100 kg	A	
	Mannitan tetranitrate	Forbidden											
	Mannitol hexanitrate (dry)	Forbidden											
	Mannitol hexanitrate, wetted *or* Nitromannite, wetted *with not less than 40 percent water, or mixture of alcohol and water, by mass.*	1.1D	UN0133	II	1.1D	121	None	62	None	Forbidden	Forbidden	10	
	Marine pollutants, liquid or solid, n.o.s., see Environmentally hazardous substances, liquid *or* solid, n.o.s..												
	Matches, block, see Matches, 'strike anywhere'												
	Matches, fusee	4.1	UN2254	III	4.1		186	186	None	Forbidden	Forbidden	A	
	Matches, safety *(book, card or strike on box)*	4.1	UN1944	III	4.1		186	186	None	25 kg	100 kg	A	
	Matches, strike anywhere	4.1	UN1331	III	4.1		186	186	None	Forbidden	Forbidden	B	
	Matches, wax, Vesta	4.1	UN1945	III	4.1		186	186	None	25 kg	100 kg	B	
	Matting acid, see Sulfuric acid												
	Medicine, liquid, flammable, toxic, n.o.s.	3	UN3248	II	3, 6.1	36, IB2	150	202	None	1 L	5 L	B	40
				III	3, 6.1	36, IB3	150	203	None	5 L	5 L	A	
	Medicine, liquid, toxic, n.o.s.	6.1	UN1851	II	6.1	36	153	202	243	5 L	5 L	C	40
				III	6.1	36	153	203	241	5 L	5 L	C	40
	Medicine, solid, toxic, n.o.s.	6.1	UN3249	II	6.1	36, T3, TP33	153	212	None	5 kg	5 kg	C	40
				III	6.1	36, T1, TP33	153	213	None	5 kg	5 kg	C	40
	Memtetrahydrophthalic anhydride, see Corrosive liquids, n.o.s.												
	Mercaptans, liquid, flammable, n.o.s. *or* Mercaptan mixture, liquid, flammable, n.o.s.	3	UN3336	I	3	T11, TP2	150	201	243	1 L	30 L	E	95
				II	3	IB2, T7, TP1, TP8, TP28	150	202	242	5 L	60 L	B	95
				III	3	B1, B52, IB3, T4, TP1, TP29	150	203	241	60 L	220 L	B	95
	Mercaptans, liquid, flammable, toxic, n.o.s. *or* Mercaptan mixtures, liquid, flammable, toxic, n.o.s..	3	UN1228	II	3, 6.1	IB2, T11, TP2, TP27	None	202	243	Forbidden	60 L	B	40, 95
				III	3, 6.1	A6, B1, IB3, T7, TP1, TP28	150	203	242	5 L	220 L	A	40, 95
	Mercaptans, liquid, toxic, flammable, n.o.s. *or* Mercaptan mixtures, liquid, toxic, flammable, n.o.s., *flash point not less than 23 degrees C.*	6.1	UN3071	II	6.1, 3	A6, IB2, T11, TP2, TP13, TP27	153	202	243	5 L	60 L	C	40, 121
	5-Mercaptotetrazol-1-acetic acid	1.4C	UN0448	II	1.4C		None	62	None	Forbidden	75 kg	09	
	Mercuric arsenate	6.1	UN1623	II	6.1	IB8, IP2, IP4, T3, TP33	153	212	242	25 kg	100 kg	A	
	Mercuric chloride	6.1	UN1624	II	6.1	IB8, IP2, IP4, T3, TP33	153	212	242	25 kg	100 kg	A	
	Mercuric compounds, see Mercury compounds, *etc*												
	Mercuric nitrate	6.1	UN1625	II	6.1	IB8, IP2, IP4, N73, T3, TP33	153	212	242	25 kg	100 kg	A	
+	Mercuric potassium cyanide	6.1	UN1626	I	6.1	IB7, IP1, N74, N75, T6, TP33	None	211	242	5 kg	50 kg	A	52
	Mercuric sulfocyanate, see Mercury thiocyanate												
	Mercurol, see Mercury nucleate												
	Mercurous azide	Forbidden											
	Mercurous compounds, see Mercury compounds, *etc*												
	Mercurous nitrate	6.1	UN1627	II	6.1	IB8, IP2, IP4, T3, TP33	153	212	242	25 kg	100 kg	A	
A W	Mercury	8	UN2809	III	8		164	164	240	35 kg	35 kg	B	40, 97

	Mercury acetate	6.1	UN1629	II	6.1	IB8, IP2, IP4, T3, TP33	153	212	242	25 kg	100 kg	A	.....
	Mercury acetylide	Forbidden			.....		.....	.....	.....	.....	.....		.....
	Mercury ammonium chloride	6.1	UN1630	II	6.1	IB8, IP2, IP4, T3, TP33	153	212	242	25 kg	100 kg	A	.....
	Mercury based pesticides, liquid, flammable, toxic, *flash point less than 23 degrees C*	3	UN2778	I	3, 6.1	T14, TP2, TP13, TP27	None	201	243	Forbidden	30 L	B	40
	.....	.....		II	3, 6.1	IB2, T11, TP2, TP13, TP27	150	202	243	1 L	60 L	B	40
	Mercury based pesticides, liquid, toxic	6.1	UN3012	I	6.1	T14, TP2, TP13, TP27	None	201	243	1 L	30 L	B	40
	.....	.....		II	6.1	IB2, T11, TP2, TP13, TP27	153	202	243	5 L	60 L	B	40
	.....	.....		III	6.1	IB3, T7, TP2, TP28	153	203	241	60 L	220 L	A	40
	Mercury based pesticides, liquid, toxic, flammable, *flash point not less than 23 degrees C*	6.1	UN3011	I	6.1, 3	T14, TP2, TP13, TP27	None	201	243	1 L	30 L	B	40
	.....	.....		II	6.1, 3	IB2, T11, TP2, TP13, TP27	153	202	243	5 L	60 L	B	40
	.....	.....		III	6.1, 3	IB3, T7, TP2, TP28	153	203	242	60 L	220 L	A	40
	Mercury based pesticides, solid, toxic	6.1	UN2777	I	6.1	IB7, IP1, T6, TP33	None	211	242	5 kg	50 kg	A	40
	.....	.....		II	6.1	IB8, IP2, IP4, T3, TP33	153	212	242	25 kg	100 kg	A	40
	.....	.....		III	6.1	IB8, IP3, T1, TP33	153	213	240	100 kg	200 kg	A	40
	Mercury benzoate	6.1	UN1631	II	6.1	IB8, IP2, IP4, T3, TP33	153	212	242	25 kg	100 kg	A	.....
	Mercury bromides	6.1	UN1634	II	6.1	IB8, IP2, IP4, T3, TP33	153	212	242	25 kg	100 kg	A	.....
	Mercury compounds, liquid, n.o.s.	6.1	UN2024	I	6.1		None	201	243	1 L	30 L	B	40
	.....	.....		II	6.1	IB2	153	202	243	5 L	60 L	B	40
	.....	.....		III	6.1	IB3	153	203	241	60 L	220 L	B	40
	Mercury compounds, solid, n.o.s.	6.1	UN2025	I	6.1	IB7, IP1, T6, TP33	None	211	242	5 kg	50 kg	A	.....
	.....	.....		II	6.1	IB8, IP2, IP4, T3, TP33	153	212	242	25 kg	100 kg	A	.....
	.....	.....		III	6.1	IB8, IP3, T1, TP33	153	213	240	100 kg	200 kg	A	.....
A	Mercury *contained in manufactured articles*	8	UN2809	III	8		None	164	None	No limit	No limit	B	40, 97
	Mercury cyanide	6.1	UN1636	II	6.1	IB8, IP2, IP4, N74, N75, T3, TP33	153	212	242	25 kg	100 kg	A	52
	Mercury fulminate, wetted *with not less than 20 percent water, or mixture of alcohol and water, by mass.*	1.1A	UN0135	II	1.1A	111, 117	None	62	None	Forbidden	Forbidden	12	.....
	Mercury gluconate	6.1	UN1637	II	6.1	IB8, IP2, IP4, T3, TP33	153	212	242	25 kg	100 kg	A	.....
	Mercury iodide	6.1	UN1638	II	6.1	IB2, IP2, IP4, T3, TP33	153	212	242	25 kg	100 kg	A	.....
	Mercury iodide aquabasic ammonobasic (Iodide of Millon's base)	Forbidden			.....		.....	.....	.....	.....	.....		.....
	Mercury nitride	Forbidden			.....		.....	.....	.....	.....	.....		.....
	Mercury nucleate	6.1	UN1639	II	6.1	IB8, IP2, IP4, T3, TP33	153	212	242	25 kg	100 kg	A	.....
	Mercury oleate	6.1	UN1640	II	6.1	IB8, IP2, IP4, T3, TP33	153	212	242	25 kg	100 kg	A	.....
	Mercury oxide	6.1	UN1641	II	6.1	IB8, IP2, IP4, T3, TP33	153	212	242	25 kg	100 kg	A	.....
	Mercury oxycyanide	Forbidden			.....		.....	.....	.....	.....	.....		.....
	Mercury oxycyanide, desensitized	6.1	UN1642	II	6.1	IB8, IP2, IP4, T3, TP33	153	212	242	25 kg	100 kg	A	52, 91
	Mercury potassium iodide	6.1	UN1643	II	6.1	IB8, IP2, IP4, T3, TP33	153	212	242	25 kg	100 kg	A	.....
	Mercury salicylate	6.1	UN1644	II	6.1	IB8, IP2, IP4, T3, TP33	153	212	242	25 kg	100 kg	A	.....
+	Mercury sulfates	6.1	UN1645	II	6.1	IB8, IP2, IP4, T3, TP33	153	212	242	25 kg	100 kg	A	.....
	Mercury thiocyanate	6.1	UN1646	II	6.1	IB8, IP2, IP4, T3, TP33	153	212	242	25 kg	100 kg	A	.....
	Mesityl oxide	3	UN1229	III	3	B1, IB3, T2, TP1	150	203	242	60 L	220 L	A	.....
G	Metal carbonyls, liquid, n.o.s.	6.1	UN3281	I	6.1	5, T14, TP2, TP13, TP27	None	201	243	1 L	30 L	B	40
	.....	.....		II	6.1	IB2, T11, TP2, TP27	153	202	243	5 L	60 L	B	40

§ 172.101 HAZARDOUS MATERIALS TABLE—Continued

Symbols	Hazardous materials descriptions and proper shipping names	Hazard class or Division	Identification Numbers	PG	Label Codes	Special provisions (§172.102)	(8) Packaging (§173.***) Exceptions	Non-bulk	Bulk	(9) Quantity limitations Passenger aircraft/rail	Cargo aircraft only	(10) Vessel stowage Location	Other
(1)	(2)	(3)	(4)	(5)	(6)	(7)	(8A)	(8B)	(8C)	(9A)	(9B)	(10A)	(10B)
	.....	.....		III	6.1	IB3, T7, TP1, TP28	153	203	241	60 L	220 L	A	40
G	Metal carbonyls, solid, n.o.s.	6.1	UN3466	I	6.1	IB7, IP1, T6, TP33	None	211	242	5 kg	50 kg	D	40
	.....	.....		II	6.1	IB8, IP2, IP4, T3, TP33	153	212	242	25 kg	100 kg	B	40
	.....	.....		III	6.1	IB8, IP3, T1, TP33	153	213	240	100 kg	200 kg	B	40
	Metal catalyst, dry	4.2	UN2881	I	4.2	N34, T21, TP7, TP33	None	187	None	Forbidden	Forbidden	C	.....
	.....	.....		II	4.2	IB6, IP2, N34, T3, TP33	None	187	242	Forbidden	50 kg	C	.....
	.....	.....		III	4.2	IB8, IP3, N34, T1, TP33	None	187	241	25 kg	100 kg	C	.....
	Metal catalyst, wetted *with a visible excess of liquid*	4.2	UN1378	II	4.2	A2, A8, IB1, N34, T3, TP33	None	212	None	Forbidden	50 kg	C	.....
	Metal hydrides, flammable, n.o.s.	4.1	UN3182	II	4.1	A1, IB4, T3, TP33	151	212	240	15 kg	50 kg	E	.....
	.....	.....		III	4.1	A1, IB4, T1, TP33	151	213	240	25 kg	100 kg	E	.....
	Metal hydrides, water reactive, n.o.s.	4.3	UN1409	I	4.3	A19, N34, N40	None	211	242	Forbidden	15 kg	D	52
	.....	.....		II	4.3	A19, IB4, N34, N40, T3, TP33	151	212	242	15 kg	50 kg	D	52
	Metal powder, self-heating, n.o.s.	4.2	UN3189	II	4.2	IB6, IP2, T3, TP33	None	212	241	15 kg	50 kg	C	.....
	.....	.....		III	4.2	IB8, IP3, T1, TP33	None	213	241	25 kg	100 kg	C	.....
	Metal powders, flammable, n.o.s.	4.1	UN3089	II	4.1	IB8, IP2, IP4, T3, TP33	151	212	240	15 kg	50 kg	B	.....
	.....	.....		III	4.1	IB6, T1, TP33	151	213	240	25 kg	100 kg	B	.....
	Metal salts of methyl nitramine (dry)	Forbidden			.....		.....	.....	.....	.....	.....		.....
G	Metal salts of organic compounds, flammable, n.o.s.	4.1	UN3181	II	4.1	A1, IB8, IP2, IP4, T3, TP33	151	212	240	15 kg	50 kg	B	40
	.....	.....		III	4.1	A1, IB8, IP3, T1, TP33	151	213	240	25 kg	100 kg	B	40
	Metaldehyde	4.1	UN1332	III	4.1	A1, IB8, IP3, T1, TP33	151	213	240	25 kg	100 kg	A	.....
G	Metallic substance, water-reactive, n.o.s.	4.3	UN3208	I	4.3	A7, IB4	None	211	242	Forbidden	15 kg	E	40
	.....	.....		II	4.3	A7, IB7, IP2, T3, TP33	151	212	242	15 kg	50 kg	E	40
	.....	.....		III	4.3	A7, IB8, IP4, T1, TP33	151	213	241	25 kg	100 kg	E	40
G	Metallic substance, water-reactive, self-heating, n.o.s.	4.3	UN3209	I	4.3, 4.2.	A7	None	211	242	Forbidden	15 kg	E	40
	.....	.....		II	4.3, 4.2.	A7, IB5, IP2, T3, TP33	None	212	242	15 kg	50 kg	E	40
	.....	.....		III	4.3, 4.2.	A7, IB8, IP4, T1, TP33	None	213	242	25 kg	100 kg	E	40
	Methacrylaldehyde, stabilized	3	UN2396	II	3, 6.1	45, IB2, T7, TP1, TP13	150	202	243	1 L	60 L	E	40
	Methacrylic acid, stabilized	8	UN2531	II	8	IB2, T7, TP1, TP18, TP30	154	202	242	1 L	30 L	C	40
+	Methacrylonitrile, stabilized	3	UN3079	I	3, 6.1	2, B9, B14, B32, B74, T20, TP2, TP13, TP38, TP45	None	227	244	Forbidden	Forbidden	D	12, 40, 48
	Methallyl alcohol	3	UN2614	III	3	B1, IB3, T2, TP1	150	203	242	60 L	220 L	A	.....
	Methane and hydrogen, mixtures, see Hydrogen and methane, mixtures, *etc*	.....			.....		.....	.....	.....	.....	.....		.....
	Methane, compressed *or* Natural gas, compressed *(with high methane content)*	2.1	UN1971	.....	2.1		306	302	302	Forbidden	150 kg	E	40
	Methane, refrigerated liquid *(cryogenic liquid) or* Natural gas, refrigerated liquid *(cryogenic liquid), with high methane content).*	2.1	UN1972	.....	2.1	T75, TP5	None	None	318	Forbidden	Forbidden	D	40
	Methanesulfonyl chloride	6.1	UN3246	I	6.1, 8	2, B9, B14, B32, B74, T20, TP2, TP12, TP13, TP38, TP45	None	227	244	Forbidden	Forbidden	D	40

+ I	Methanol	3	UN1230	II	3, 6.1	IB2, T7, TP2	150	202	242	1 L	60 L	B	40
D	Methanol	3	UN1230	II	3	IB2, T7, TP2	150	202	242	1 L	60 L	B	40
	Methazoic acid	Forbidden											
	4-Methoxy-4-methylpentan-2-one	3	UN2293	III	3	B1, IB3, T2, TP1	150	203	242	60 L	220 L	A	
	1-Methoxy-2-propanol	3	UN3092	III	3	B1, IB3, T2, TP1	150	203	242	60 L	220 L	A	
+	Methoxymethyl isocyanate	3	UN2605	I	3, 6.1	1, B9, B14, B30, B72, T22, TP2, TP13, TP38, TP44	None	226	244	Forbidden	Forbidden	D	40
	Methyl acetate	3	UN1231	II	3	IB2, T4, TP1	150	202	242	5 L	60 L	B	
	Methyl acetylene and propadiene mixtures, stabilized	2.1	UN1060		2.1	T50	306	304	314, 315.	Forbidden	150 kg	B	40
	Methyl acrylate, stabilized	3	UN1919	II	3	IB2, T4, TP1, TP13	150	202	242	5 L	60 L	B	
	Methyl alcohol, see Methanol												
	Methyl allyl chloride	3	UN2554	II	3	IB2, T4, TP1, TP13	150	202	242	5 L	60 L	E	
	Methyl amyl ketone, see Amyl methyl ketone												
	Methyl bromide	2.3	UN1062		2.3	3, B14, T50	None	193	314, 315.	Forbidden	Forbidden	D	40
	Methyl bromide and chloropicrin mixtures with more than 2 percent chloropicrin, see Chloropicrin and methyl bromide mixtures.												
	Methyl bromide and chloropicrin mixtures with not more than 2 percent chloropicrin, see Methyl bromide.												
	Methyl bromide and ethylene dibromide mixtures, liquid	6.1	UN1647	I	6.1	2, B9, B14, B32, B74, N65, T20, TP2, TP13, TP38, TP44	None	227	244	Forbidden	Forbidden	C	40
	Methyl bromoacetate	6.1	UN2643	II	6.1	IB2, T7, TP2	153	202	243	5 L	60 L	D	40
	2-Methlybutanal	3	UN3371	II		3IB2, T4, TP1	150	202	242	5 L	60 L	B	
	2-Methyl-1-butene	3	UN2459	I	3	T11, TP2	None	201	243	1 L	30 L	E	
	2-Methyl-2-butene	3	UN2460	II	3	IB2, IP8, T7, TP1	None	202	242	5 L	60 L	E	
	3-Methyl-1-butene	3	UN2561	I	3	T11, TP2	None	201	243	1 L	30 L	E	
	Methyl tert-butyl ether	3	UN2398	II	3	IB2, T7, TP1	150	202	242	5 L	60 L	E	
	Methyl butyrate	3	UN1237	II	3	IB2, T4, TP1	150	202	242	5 L	60 L	B	
	Methyl chloride, *or* Refrigerant gas R 40	2.1	UN1063		2.1	T50	306	304	314, 315.	5 kg	100 kg	D	40
	Methyl chloride and chloropicrin mixtures, see Chloropicrin and methyl chloride mixtures												
	Methyl chloride and methylene chloride mixtures	2.1	UN1912		2.1	T50	306	304	314, 315.	Forbidden	150 kg	D	40
	Methyl chloroacetate	6.1	UN2295	I	6.1, 3	T14, TP2, TP13	None	201	243	1 L	30 L	D	
	Methyl chlorocarbonate, see Methyl chloroformate												
	Methyl chloroform, see 1,1,1-Trichloroethane												
	Methyl chloroformate	6.1	UN1238	I	6.1, 3, 8.	1, B9, B14, B30, B72, N34, T22, TP2, TP13, TP38, TP44	None	226	244	Forbidden	Forbidden	D	21, 40, 100
	Methyl chloromethyl ether	6.1	UN1239	I	6.1, 3	1, B9, B14, B30, B72, T22, TP2, TP38, TP44	None	226	244	Forbidden	Forbidden	D	40
	Methyl 2-chloropropionate	3	UN2933	III	3	B1, IB3, T2, TP1	150	203	242	60 L	220 L	A	
	Methyl dichloroacetate	6.1	UN2299	III	6.1	IB3, T4, TP1	153	203	241	60 L	220 L	A	
	Methyl ethyl ether, see Ethyl methyl ether												
	Methyl ethyl ketone, *see* Ethyl methyl ketone												
	Methyl ethyl ketone peroxide, in solution with more than 9 percent by mass active oxygen	Forbidden											
	2-Methyl-5-ethylpyridine	6.1	UN2300	III	6.1	IB3, T4, TP1	153	203	241	60 L	220 L	A	
	Methyl fluoride, *or* Refrigerant gas R 41	2.1	UN2454		2.1		306	304	314, 315.	Forbidden	150 kg	E	40
	Methyl formate	3	UN1243	I	3	T11, TP2	150	201	243	1 L	30 L	E	
	2-Methyl-2-heptanethiol	6.1	UN3023	I	6.1, 3	2, B9, B14, B32, B74, T20, TP2, TP13, TP38, TP45	None	227	244	Forbidden	Forbidden	D	40, 102
	Methyl iodide	6.1	UN2644	I	6.1	2, B9, B14, B32, B74, T20, TP2, TP13, TP38, TP45	None	227	244	Forbidden	Forbidden	A	12, 40
	Methyl isobutyl carbinol	3	UN2053	III	3	B1, IB3, T2, TP1	150	203	242	60 L	220 L	A	
	Methyl isobutyl ketone	3	UN1245	II	3	IB2, T4, TP1	150	202	242	5 L	60 L	B	
	Methyl isobutyl ketone peroxide, in solution with more than 9 percent by mass active oxygen	Forbidden											
	Methyl isocyanate	6.1	UN2480	I	6.1, 3	1, B9, B14, B30, B72, T22, TP2, TP13, TP38, TP44	None	226	244	Forbidden	Forbidden	D	40, 52
	Methyl isopropenyl ketone, stabilized	3	UN1246	II	3	IB2, T4, TP1	150	202	242	5 L	60 L	B	

§ 172.101 HAZARDOUS MATERIALS TABLE—Continued

Symbols	Hazardous materials descriptions and proper shipping names	Hazard class or Division	Identification Numbers	PG	Label Codes	Special provisions (§172.102)	(8) Packaging (§173.***) Exceptions	Non-bulk	Bulk	(9) Quantity limitations Passenger aircraft/rail	Cargo aircraft only	(10) Vessel stowage Location	Other
(1)	(2)	(3)	(4)	(5)	(6)	(7)	(8A)	(8B)	(8C)	(9A)	(9B)	(10A)	(10B)
	Methyl isothiocyanate	6.1	UN2477	I	6.1, 3	2, B9, B14, B32, B74, T20, TP2, TP13, TP38, TP45	None	227	244	Forbidden	Forbidden	A	
	Methyl isovalerate	3	UN2400	II	3	IB2, T4, TP1	150	202	242	5 L	60 L	B	
	Methyl magnesium bromide, in ethyl ether	4.3	UN1928	I	4.3, 3		None	201	243	Forbidden	1 L	D	
	Methyl mercaptan	2.3	UN1064		2.3, 2.1.	3, B7, B9, B14, T50	None	304	314, 315.	Forbidden	Forbidden	D	40
	Methyl mercaptopropionaldehyde, see Thia-4-pentanal												
	Methyl methacrylate monomer, stabilized	3	UN1247	II	3	IB2, T4, TP1	150	202	242	5 L	60 L	B	40
	Methyl nitramine (dry)	Forbidden											
	Methyl nitrate	Forbidden											
	Methyl nitrite	Forbidden											
	Methyl norbornene dicarboxylic anhydride, see Corrosive liquids, n.o.s.												
	Methyl orthosilicate	6.1	UN2606	I	6.1, 3	2, B9, B14, B32, B74, T20, TP2, TP13, TP38, TP45	None	227	244	Forbidden	Forbidden	E	40
D	Methyl phosphonic dichloride	6.1	NA9206	I	6.1, 8	2, B9, B14, B32, B74, N34, N43, T20, TP4, TP12, TP13, TP38, TP45	None	227	244	Forbidden	Forbidden	C	
	Methyl phosphonothioic dichloride, anhydrous, see Corrosive liquid, n.o.s.												
D	Methyl phosphonous dichloride, *pyrophoric liquid*	6.1	NA2845	I	6.1, 4.2.	2, B9, B14, B16, B32, B74, T20, TP4, TP12, TP13, TP38, TP45	None	227	244	Forbidden	Forbidden	D	18
	Methyl picric acid (heavy metal salts of)	Forbidden											
	Methyl propionate	3	UN1248	II	3	IB2, T4, TP1	150	202	242	5 L	60 L	B	
	Methyl propyl ether	3	UN2612	II	3	IB2, IP8, T7, TP2	150	202	242	5 L	60 L	E	40
	Methyl propyl ketone	3	UN1249	II	3	IB2, T4, TP1	150	202	242	5 L	60 L	B	
	Methyl sulfate, see Dimethyl sulfate												
	Methyl sulfide, see Dimethyl sulfide												
	Methyl trichloroacetate	6.1	UN2533	III	6.1	IB3, T4, TP1	153	203	241	60 L	220 L	A	
	Methyl trimethylol methane trinitrate	Forbidden											
	Methyl vinyl ketone, stabilized	6.1	UN1251	I	6.1, 3, 8.	1, B9, B14, B30, B72, T22, TP2, TP13, TP38, TP44	None	226	244	Forbidden	Forbidden	B	40
	Methylal	3	UN1234	II	3	IB2, IP8, T7, TP2	None	202	242	5 L	60 L	E	
	Methylamine, anhydrous	2.1	UN1061		2.1	T50	306	304	314, 315.	Forbidden	150 kg	B	40
	Methylamine, aqueous solution	3	UN1235	II	3, 8	B1, IB2, T7, TP1	150	202	243	1 L	5 L	E	135
	Methylamine dinitramine and dry salts thereof	Forbidden											
	Methylamine nitroform	Forbidden											
	Methylamine perchlorate (dry)	Forbidden											
	Methylamyl acetate	3	UN1233	III	3	B1, IB3, T2, TP1	150	203	242	60 L	220 L	A	
	N-Methylaniline	6.1	UN2294	III	6.1	IB3, T4, TP1	153	203	241	60 L	220 L	A	
	alpha-Methylbenzyl alcohol, liquid	6.1	UN2937	III	6.1	IB3, T4, TP1	153	203	241	60 L	220 L	A	
	alpha-Methylbenzyl alcohol, solid	6.1	UN3438	III	6.1	IB8, IP3, T1, TP33	153	213	240	100 kg	200 kg	A	
	3-Methylbutan-2-one	3	UN2397	II	3	IB2, T4, TP1	150	202	242	5 L	60 L	B	
	N-Methylbutylamine	3	UN2945	II	3, 8	IB2, T7, TP1	150	202	243	1 L	5 L	B	40
	Methylchlorosilane	2.3	UN2534		2.3, 2.1, 8.	2, B9, B14, N34	None	226	314, 315.	Forbidden	Forbidden	D	17, 40
	Methylcyclohexane	3	UN2296	II	3	B1, IB2, T4, TP1	150	202	242	5 L	60 L	B	
	Methylcyclohexanols, *flammable*	3	UN2617	III	3	B1, IB3, T2, TP1	150	203	242	60 L	220 L	A	
	Methylcyclohexanone	3	UN2297	III	3	B1, IB3, T2, TP1	150	203	242	60 L	220 L	A	
	Methylcyclopentane	3	UN2298	II	3	IB2, T4, TP1	150	202	242	5 L	60 L	B	
D	Methyldichloroarsine	6.1	NA1556	I	6.1	2, T20, TP4, TP12, TP13, TP38, TP45	None	192	None	Forbidden	Forbidden	D	40

	Methyldichlorosilane	4.3	UN1242	I	4.3, 8, 3.	A2, A3, A7, B6, B77, N34, T10, TP2, TP7, TP13	None	201	243	Forbidden	1 L	D	21, 28, 40, 49, 100
	Methylene chloride, see Dichloromethane												
	Methylene glycol dinitrate	Forbidden											
	2-Methylfuran	3	UN2301	II	3	IB2, T4, TP1	150	202	242	5 L	60 L	E	
	a-Methylglucoside tetranitrate	Forbidden											
	a-Methylglycerol trinitrate	Forbidden											
	5-Methylhexan-2-one	3	UN2302	III	3	B1, IB3, T2, TP1	150	203	242	60 L	220 L	A	
	Methylhydrazine	6.1	UN1244	I	6.1, 3, 8.	1, B7, B9, B14, B30, B72, B77, N34, T22, TP2, TP13, TP38, TP44	None	226	244	Forbidden	Forbidden	D	21, 40, 49, 100
	4-Methylmorpholine *or* n-methylmorpholine	3	UN2535	II	3, 8	B6, IB2, T7, TP1	150	202	243	1 L	5 L	B	40
	Methylpentadienes	3	UN2461	II	3	IB2, T4, TP1	150	202	242	5 L	60 L	E	
	2-Methylpentan-2-ol	3	UN2560	III	3	B1, IB3, T2, TP1	150	203	242	60 L	220 L	A	
	Methylpentanes, see Hexanes												
	Methylphenyldichlorosilane	8	UN2437	II	8	IB2, T7, TP2, TP13	154	202	242	1 L	30 L	C	40
	1-Methylpiperidine	3	UN2399	II	3, 8	IB2, T7, TP1	150	202	243	1 L	5 L	B	
	Methyltetrahydrofuran	3	UN2536	II	3	IB2, T4, TP1	150	202	242	5 L	60 L	B	
	Methyltrichlorosilane	3	UN1250	I	3, 8	A7, B6, B77, N34, T11, TP2, TP13	None	201	243	Forbidden	2.5 L	B	40
	alpha-Methylvaleraldehyde	3	UN2367	II	3	B1, IB2, T4, TP1	150	202	242	5 L	60 L	B	
	Mine rescue equipment containing carbon dioxide, see Carbon dioxide												
	Mines *with bursting charge*	1.1F	UN0136	II	1.1F			62	None	Forbidden	Forbidden	08	
	Mines *with bursting charge*	1.1D	UN0137	II	1.1D			62	None	Forbidden	Forbidden	03	
	Mines *with bursting charge*	1.2D	UN0138	II	1.2D			62	None	Forbidden	Forbidden	03	
	Mines *with bursting charge*	1.2F	UN0294	II	1.2F			62	None	Forbidden	Forbidden	08	
	Mixed acid, see Nitrating acid, mixtures *etc*												
	Mobility aids, see Battery powered equipment *or* Battery powered vehicle'												
D	Model rocket motor	1.4C	NA0276	II	1.4C	51	None	62	None	Forbidden	75 kg	06	
D	Model rocket motor	1.4S	NA0323	II	1.4S	51	None	62	None	25 kg	100 kg	05	
	Molybdenum pentachloride	8	UN2508	III	8	IB8, IP3, T1, TP33	154	213	240	25 kg	100 kg	C	40
	Monochloroacetone (unstabilized)	Forbidden											
	Monochloroethylene, see Vinyl chloride, stabilized												
	Monoethanolamine, see Ethanolamine, solutions												
	Monoethylamine, see Ethylamine												
	Morpholine	8	UN2054	I	8, 3	A6, T10, TP2	None	201	243	0.5 L	2.5 L	A	
	Morpholine, aqueous, mixture, see Corrosive liquids, n.o.s.												
	Motor fuel anti-knock compounds *see* Motor fuel anti-knock mixtures												
+	Motor fuel anti-knock mixtures	6.1	UN1649	I	6.1, 3	14, 151, B9, B90, T14, TP2, TP13	None	201	244	Forbidden	30 L	D	25, 40
	Motor spirit, *see* Gasoline												
	Muriatic acid, see Hydrochloric acid												
	Musk xylene, *see* 5-tert-Butyl-2,4,6-trinitro-m-xylene												
	Naphtha see Petroleum distillates n.o.s.												
	Naphthalene, crude *or* Naphthalene, refined	4.1	UN1334	III	4.1	A1, IB8, IP3, T1, TP33	151	213	240	25 kg	100 kg	A	
	Naphthalene diozonide	Forbidden											
	beta-Naphthylamine	6.1	UN1650	II	6.1	IB8, IP2, IP4, T3, TP33	153	212	242	25 kg	100 kg	A	
	beta-Naphthylamine, solid	6.1	UN1650	II	6.1	IB8, IP2, IP4, T3, TP33	153	212	242	25 kg	100 kg	A	
	beta-Naphthylamine solution	6.1	UN3411	II	6.1	IB2, T7, TP2	153	202	243	5 L	60 L	A	
				III	6.1	IB2, T7, TP2	153	203	241	60 L	220 L	A	
	alpha-Naphthylamine	6.1	UN2077	III	6.1	IB8, IP3, T1, TP33	153	213	240	100 kg	200 kg	A	
	Naphthalene, molten	4.1	UN2304	III	4.1	IB1, T1, TP3	151	213	241	Forbidden	Forbidden	C	
	Naphthylamineperchlorate	Forbidden											
	Naphthylthiourea	6.1	UN1651	II	6.1	IB8, IP2, IP4, T3, TP33	153	212	242	25 kg	100 kg	A	
	Naphthylurea	6.1	UN1652	II	6.1	IB8, IP2, IP4, T3, TP33	153	212	242	25 kg	100 kg	A	
	Natural gases (with high methane content), see Methane, *etc. (UN 1971, UN 1972)*												
	Neohexane, see Hexanes												
	Neon, compressed	2.2	UN1065		2.2		306	302	302	75 kg	150 kg	A	
	Neon, refrigerated liquid *(cryogenic liquid)*	2.2	UN1913		2.2	T75, TP5	320	316	None	50 kg	500 kg	B	
	New explosive or explosive device, see §§ 173.51 and 173.56												
	Nickel carbonyl	6.1	UN1259	I	6.1, 3	1	None	198	None	Forbidden	Forbidden	D	18, 40

§ 172.101 HAZARDOUS MATERIALS TABLE—Continued

Symbols	Hazardous materials descriptions and proper shipping names	Hazard class or Division	Identification Numbers	PG	Label Codes	Special provisions (§172.102)	(8) Packaging (§173.***) Exceptions	Non-bulk	Bulk	(9) Quantity limitations Passenger aircraft/rail	Cargo aircraft only	(10) Vessel stowage Location	Other
(1)	(2)	(3)	(4)	(5)	(6)	(7)	(8A)	(8B)	(8C)	(9A)	(9B)	(10A)	(10B)
	Nickel cyanide	6.1	UN1653	II	6.1	IB8, IP2, IP4, N74, N75, T3, TP33	153	212	242	25 kg	100 kg	A	52
	Nickel nitrate	5.1	UN2725	III	5.1	A1, IB8, IP3, T1, TP33	152	213	240	25 kg	100 kg	A	
	Nickel nitrite	5.1	UN2726	III	5.1	A1, IB8, IP3, T1, TP33	152	213	240	25 kg	100 kg	A	56, 58
	Nickel picrate	Forbidden											
	Nicotine	6.1	UN1654	II	6.1	IB2	153	202	243	5 L	60 L	A	
	Nicotine compounds, liquid, n.o.s. *or* Nicotine preparations, liquid, n.o.s.	6.1	UN3144	I	6.1	A4	None	201	243	1 L	30 L	B	40
				II	6.1	IB2, T11, TP2, TP27	153	202	243	5 L	60 L	B	40
				III	6.1	IB3, T7, TP1, TP28	153	203	241	60 L	220 L	B	40
	Nicotine compounds, solid, n.o.s. *or* Nicotine preparations, solid, n.o.s.	6.1	UN1655	I	6.1	IB7, IP1, T6, TP33	None	211	242	5 kg	50 kg	B	
				II	6.1	IB8, IP2, IP4, T3, TP33	153	212	242	25 kg	100 kg	A	
				III	6.1	IB8, IP3, T1, TP33	153	213	240	100 kg	200 kg	A	
	Nicotine hydrochloride liquid *or* solution	6.1	UN1656	II	6.1	IB2	153	202	243	5 L	60 L	A	
				III	6.1	IB3	153	203	241	60 L	220 L	A	
	Nicotine hydrochloride, solid	6.1	UN3444	II	6.1	IB8, IP2, IP4, T3, TP33	153	212	242	25 kg	100 kg	A	
	Nicotine salicylate	6.1	UN1657	II	6.1	IB8, IP2, IP4, T3, TP33	153	212	242	25 kg	100 kg	A	
	Nicotine sulfate solution	6.1	UN1658	II	6.1	IB2, T7, TP2	153	202	243	5 L	60 L	A	
				III	6.1	IB3, T7, TP2	153	203	241	60 L	220 L	A	
	Nicotine sulphate, solid	6.1	UN3445	II	6.1	IB8, IP2, IP4, T3, TP33	153	212	242	25 kg	100 kg	A	
	Nicotine tartrate	6.1	UN1659	II	6.1	IB8, IP2, IP4, T3, TP33	153	212	242	25 kg	100 kg	A	
	Nitrated paper (unstable)	Forbidden											
	Nitrates, inorganic, aqueous solution, n.o.s.	5.1	UN3218	II	5.1	58, IB2, T4, TP1	152	202	242	1 L	5 L	B	56, 58, 133
				III	5.1	58, IB2, T4, TP1	152	203	241	2.5 L	30 L	B	56, 58, 133
	Nitrates, inorganic, n.o.s.	5.1	UN1477	II	5.1	IB8, IP2, IP4, T3, TP33	152	212	240	5 kg	25 kg	A	56, 58
				III	5.1	IB8, IP3, T1, TP33	152	213	240	25 kg	100 kg	A	56, 58
	Nitrates of diazonium compounds	Forbidden											
	Nitrating acid mixtures, spent *with more than 50 percent nitric acid*	8	UN1826	I	8, 5.1	A7, T10, TP2, TP12, TP13	None	158	243	Forbidden	2.5 L	D	40, 66
	Nitrating acid mixtures spent *with not more than 50 percent nitric acid*	8	UN1826	II	8	A7, B2, IB2, T8, TP2, TP12	None	158	242	Forbidden	30 L	D	40
	Nitrating acid mixtures *with more than 50 percent nitric acid*	8	UN1796	I	8, 5.1	A7, T10, TP2, TP12, TP13	None	158	243	Forbidden	2.5 L	D	40, 66
	Nitrating acid mixtures *with not more than 50 percent nitric acid*	8	UN1796	II	8	A7, B2, IB2, T8, TP2, TP12, TP13	None	158	242	Forbidden	30 L	D	40
	Nitric acid *other than red fuming, with more than 70 percent nitric acid*	8	UN2031	I	8, 5.1	A3, B47, B53, T10, TP2, TP12, TP13	None	158	243	Forbidden	2.5 L	D	44, 66, 89, 90, 110, 111
	Nitric acid *other than red fuming, with not more than 70 percent nitric acid*	8	UN2031	II	8	A6, B2, B47, B53, IB2, T8, TP2, TP12	None	158	242	Forbidden	30 L	D	44, 66, 89, 90, 110, 111
+	Nitric acid, red fuming	8	UN2032	I	8, 5.1, 6.1.	2, B9, B32, B74, T20, TP2, TP12, TP13, TP38, TP45	None	227	244	Forbidden	Forbidden	D	40, 66, 74, 89, 90
	Nitric oxide, compressed	2.3	UN1660		2.3, 5.1, 8.	1, B37, B46, B50, B60, B77	None	337	None	Forbidden	Forbidden	D	40, 89, 90

	Nitric oxide and dinitrogen tetroxide mixtures *or* Nitric oxide and nitrogen dioxide mixtures	2.3	UN1975		2.3, 5.1, 8.	1, B7, B9, B14, B45, B46, B61, B66, B67, B77	None	337	None	Forbidden	Forbidden	D	40, 89, 90
G	Nitriles, flammable, toxic, n.o.s.	3	UN3273	I	3, 6.1	T14, TP2, TP13, TP27	None	201	243	Forbidden	30 L	E	40, 52
				II	3, 6.1	IB2, T11, TP2, TP13, TP27	150	202	243	1 L	60 L	B	40, 52
G	Nitriles, toxic, flammable, n.o.s.	6.1	UN3275	I	6.1, 3	5, T14, TP2, TP13, TP27	None	201	243	1 L	30 L	B	40, 52
				II	6.1, 3	IB2, T11, TP2, TP13, TP27	153	202	243	5 L	60 L	B	40, 52
G	Nitriles, toxic, liquid, n.o.s.	6.1	UN3276	I	6.1	5, T14, TP2, TP13, TP27	None	201	243	1 L	30 L	B	52
G	Nitriles, toxic, solid, n.o.s.	6.1	UN3439	I	6.1	IB7, IP1, T6, TP33	None	211	242	5 kg	50 kg	D	52
G	Nitriles, toxic, liquid, n.o.s.	6.1	UN3276	II	6.1	IB2, T11, TP2, TP27	153	202	243	5 L	60 L	B	52
G	Nitriles, toxic, solid, n.o.s.	6.1	UN3439	II	6.1	IB8, IP2, IP4, T3, TP33	153	212	242	25 kg	100 kg	B	52
G	Nitriles, toxic, liquid, n.o.s.	6.1	UN3276	III	6.1	IB3, T7, TP1, TP28	153	203	241	60 L	220 L	A	52
G	Nitriles, toxic, solid, n.o.s.	6.1	UN3439	III	6.1	IB8, IP3, T1, TP33	153	213	240	100 kg	200 kg	A	52
	Nitrites, inorganic, aqueous solution, n.o.s.	5.1	UN3219	II	5.1	IB1, T4, TP1	152	202	242	1 L	5 L	B	46, 56, 58, 133
				III	5.1	IB2, T4, TP1	152	203	241	2.5 L	30 L	B	46, 56, 58, 133
	Nitrites, inorganic, n.o.s.	5.1	UN2627	II	5.1	33, IB8, IP4, T3, TP33	152	212	None	5 kg	25 kg	A	46, 56, 58, 133
	3-Nitro-4-chlorobenzotrifluoride	6.1	UN2307	II	6.1	IB2, T7, TP2	153	202	243	5 L	60 L	A	40
	6-Nitro-4-diazotoluene-3-sulfonic acid (dry)	Forbidden											
	Nitro isobutane triol trinitrate	Forbidden											
	N-Nitro-N-methylglycolamide nitrate	Forbidden											
	2-Nitro-2-methylpropanol nitrate	Forbidden											
	Nitro urea	1.1D	UN0147	II	1.1D		None	62	None	Forbidden	Forbidden	10	
	N-Nitroaniline	Forbidden											
+	Nitroanilines (*o-; m-; p-;*)	6.1	UN1661	II	6.1	IB8, IP2, IP4, T3, TP33	153	212	242	25 kg	100 kg	A	
	Nitroanisole, liquid	6.1	UN2730	III	6.1	IB3, T4, TP1	153	203	241	60 L	220 L	A	
	Nitroanisoles, solid	6.1	UN3458	III	6.1	IB8, IP3, T1, TP33	153	213	240	100 kg	200 kg	A	
+	Nitrobenzene	6.1	UN1662	II	6.1	IB2, T7, TP2	153	202	243	5 L	60 L	A	40
	m-Nitrobenzene diazonium perchlorate	Forbidden											
	Nitrobenzenesulfonic acid	8	UN2305	II	8	B2, B4, IB8, IP2, IP4, T3, TP33	154	202	242	1 L	30 L	A	
	Nitrobenzol, see Nitrobenzene												
	5-Nitrobenzotriazol	1.1D	UN0385	II	1.1D		None	62	None	Forbidden	Forbidden	10	
	Nitrobenzotrifluorides, liquid	6.1	UN2306	II	6.1	IB2, T7, TP2	153	202	243	5 L	60 L	A	40
	Nitrobenzotrifluorides, solid	6.1	UN3431	II	6.1	IB8, IP2, IP4, T3, TP33	153	212	242	25 kg	100 kg	A	40
	Nitrobromobenzenes, liquid	6.1	UN2732	III	6.1	IB3, T4, TP1	153	203	241	60 L	220 L	A	
	Nitrobromobenzenes, solid	6.1	UN3459	III	6.1	IB8, IP3, T1, TP33	153	213	240	100 kg	200 kg	A	
	Nitrocellulose, *dry or wetted with less than 25 percent water (or alcohol), by mass*	1.1D	UN0340	II	1.1D		None	62	None	Forbidden	Forbidden	13	27E
	Nitrocellulose membrane filters, *with not more than 12.6% nitrogen, by dry mass*	4.1	UN3270	II	4.1	43, A1	151	212	240	1 kg	15 kg	D	
	Nitrocellulose, plasticized *with not less than 18 percent plasticizing substance, by mass*	1.3C	UN0343	II	1.3C		None	62	None	Forbidden	Forbidden	10	
	Nitrocellulose, solution, flammable *with not more than 12.6 percent nitrogen, by mass, and not more than 55 percent nitrocellulose.*	3	UN2059	I	3	T11, TP1, TP8, TP27	None	201	243	1 L	30 L	E	
				II	3	IB2, T4, TP1, TP8	150	202	242	5 L	60 L	B	
				III	3	B1, IB3, T2, TP1	150	203	242	60 L	220 L	A	
	Nitrocellulose, *unmodified or plasticized with less than 18 percent plasticizing substance, by mass.*	1.1D	UN0341	II	1.1D		None	62	None	Forbidden	Forbidden	13	27E
	Nitrocellulose, wetted *with not less than 25 percent alcohol, by mass*	1.3C	UN0342	II	1.3C		None	62	None	Forbidden	Forbidden	10	
	Nitrocellulose with alcohol *with not less than 25 percent alcohol by mass, and with not more than 12.6 percent nitrogen, by dry mass.*	4.1	UN2556	II	4.1		151	212	None	1 kg	15 kg	D	28
	Nitrocellulose, *with not more than 12.6 percent nitrogen, by dry mass, or* Nitrocellulose mixture with pigment *or* Nitrocellulose mixture with plasticizer *or* Nitrocellulose mixture with pigment and plasticizer.	4.1	UN2557	II	4.1	44	151	212	None	1 kg	15 kg	D	28
	Nitrocellulose with water *with not less than 25 percent water, by mass*	4.1	UN2555	II	4.1		151	212	None	15 kg	50 kg	E	28
	Nitrochlorobenzene, see Chloronitrobenzenes *etc*												
	Nitrocresols, solid	6.1	UN2446	III	6.1	IB8, IP3, T1, TP33	153	213	240	100 kg	200 kg	A	
	Nitrocresols, liquid	6.1	UN3434	III	6.1	IB3, T4, TP1	153	203	241	60 L	220 L	A	
	Nitroethane	3	UN2842	III	3	B1, IB3, T2, TP1	150	203	242	60 L	220 L	A	

§ 172.101 HAZARDOUS MATERIALS TABLE—Continued

Symbols	Hazardous materials descriptions and proper shipping names	Hazard class or Division	Identification Numbers	PG	Label Codes	Special provisions (§172.102)	(8) Packaging (§173.***) Exceptions	Non-bulk	Bulk	(9) Quantity limitations Passenger aircraft/rail	Cargo aircraft only	(10) Vessel stowage Location	Other
(1)	(2)	(3)	(4)	(5)	(6)	(7)	(8A)	(8B)	(8C)	(9A)	(9B)	(10A)	(10B)
	Nitroethyl nitrate	Forbidden											
	Nitroethylene polymer	Forbidden											
	Nitrogen, compressed	2.2	UN1066		2.2		306	302	314, 315.	75 kg	150 kg	A	
	Nitrogen dioxide, *see* Dinitrogen tetroxide												
	Nitrogen fertilizer solution, see Fertilizer ammoniating solution *etc*												
	Nitrogen, mixtures with rare gases, see Rare gases and nitrogen mixtures												
	Nitrogen peroxide, see Dinitrogen tetroxide												
	Nitrogen, refrigerated liquid *cryogenic liquid*	2.2	UN1977		2.2	T75, TP5	320	316	318	50 kg	500 kg	D	
	Nitrogen tetroxide and nitric oxide mixtures, see Nitric oxide and nitrogen tetroxide mixtures												
	Nitrogen tetroxide, see Dinitrogen tetroxide												
	Nitrogen trichloride	Forbidden											
	Nitrogen trifluoride	2.2	UN2451		2.2, 5.1.		None	302	None	75 kg	150 kg	D	40
	Nitrogen triiodide	Forbidden											
	Nitrogen triiodide monoamine	Forbidden											
	Nitrogen trioxide	2.3	UN2421		2.3, 5.1, 8.	1	None	336	245	Forbidden	Forbidden	D	40, 89, 90
	Nitroglycerin, desensitized *with not less than 40 percent non-volatile water insoluble phlegmatizer, by mass.*	1.1D	UN0143	II	1.1D, 6.1.	125	None	62	None	Forbidden	Forbidden	13	21E
	Nitroglycerin, liquid, not desensitized	Forbidden											
	Nitroglycerin mixture, desensitized, liquid, flammable, n.o.s. *with not more than 30 percent nitroglycerin, by mass.*	3	UN3343		3	129	None	214	None	Forbidden	Forbidden	D	
	Nitroglycerin mixture, desensitized, liquid, n.o.s. *with not more than 30% nitroglycerin, by mass*	3	UN3357	II	3	142	None	202	243	5 L	60 L	E	
	Nitroglycerin mixture, desensitized, solid, n.o.s. *with more than 2 percent but not more than 10 percent nitroglycerin, by mass.*	4.1	UN3319	II	4.1	118	None	None	None	Forbidden	0.5 kg	E	
	Nitroglycerin, solution in alcohol, *with more than 1 percent but not more than 5 percent nitroglycerin.*	3	UN3064	II	3	N8	None	202	None	Forbidden	5 L	E	
	Nitroglycerin, solution in alcohol, *with more than 1 percent but not more than 10 percent nitrogylcerin.*	1.1D	UN0144	II	1.1D		None	62	None	Forbidden	Forbidden	10	21E
	Nitroglycerin solution in alcohol *with not more than 1 percent nitroglycerin*	3	UN1204	II	3	IB2, N34	150	202	None	5 L	60 L	B	
	Nitroguanidine nitrate	Forbidden											
	Nitroguanidine *or* Picrite, *dry or wetted with less than 20 percent water, by mass*	1.1D	UN0282	II	1.1D		None	62	None	Forbidden	Forbidden	10	
	Nitroguanidine, wetted *or* Picrite, wetted *with not less than 20 percent water, by mass*	4.1	UN1336	I	4.1	23, A8, A19, A20, N41	None	211	None	1 kg	15 kg	E	28
	1-Nitrohydantoin	Forbidden											
	Nitrohydrochloric acid	8	UN1798	I	8	A3, B10, N41, T10, TP2, TP12, TP13	None	201	243	Forbidden	2.5 L	D	40, 66, 74, 89, 90
	Nitromannite (dry)	Forbidden											
	Nitromannite, wetted, *see* Mannitol hexanitrate, *etc*												
	Nitromethane	3	UN1261	II	3		150	202	None	Forbidden	60 L	A	
	Nitromuriatic acid, see Nitrohydrochloric acid												
	Nitronaphthalene	4.1	UN2538	III	4.1	A1, IB8, IP3, T1, TP33	151	213	240	25 kg	100 kg	A	
	4-Nitrophenylhydrazine, *with not less than 30% water, by mass*	4.1	UN3376	I	4.1	164, A8, A19, A20, N41	None	211	None	Forbidden	15 kg	E	36
+	Nitrophenols (*o-; m-; p-;*)	6.1	UN1663	III	6.1	IB8, IP3, T1, TP33	153	213	240	100 kg	200 kg	A	
	m-Nitrophenyldinitro methane	Forbidden											
	Nitropropanes	3	UN2608	III	3	B1, IB3, T2, TP1	150	203	242	60 L	220 L	A	
	p-Nitrosodimethylaniline	4.2	UN1369	II	4.2	A19, A20, IB6, IP2, N34, T3, TP33	None	212	241	15 kg	50 kg	D	34
	Nitrostarch, *dry or wetted with less than 20 percent water, by mass*	1.1D	UN0146	II	1.1D		None	62	None	Forbidden	Forbidden	10	
	Nitrostarch, wetted *with not less than 20 percent water, by mass*	4.1	UN1337	I	4.1	23, A8, A19, A20, N41	None	211	None	1 kg	15 kg	D	28
	Nitrosugars (dry)	Forbidden											
	Nitrosyl chloride	2.3	UN1069		2.3, 8	3, B14	None	304	314, 315.	Forbidden	Forbidden	D	40
	Nitrosylsulfuric acid, liquid	8	UN2308	II	8	A3, A6, A7, B2, IB2, N34, T8, TP2, TP12	154	202	242	1 L	30 L	D	40, 66, 74, 89, 90

	Nitrosylsulphuric acid, solid	8	UN3456	II	8	IB8, IP2, IP4, T3, TP33	154	212	240	15 kg	50 kg	D	40, 66, 74, 89, 90
	Nitrotoluenes, liquid	6.1	UN1664	II	6.1	IB2, T7, TP2	153	202	243	5 L	60 L	A	
	Nitrotoluenes, solid	6.1	UN3446	II	6.1	IB8, IP2, IP4, T3, TP33	153	212	242	25 kg	100 kg	A	
	Nitrotoluidines (mono)	6.1	UN2660	III	6.1	IB8, IP3, T1, TP33	153	213	240	100 kg	200 kg	A	
	Nitrotriazolone *or* NTO	1.1D	UN0490	II	1.1D		None	62	None	Forbidden	Forbidden	10	
	Nitrous oxide and carbon dioxide mixtures, see Carbon dioxide and nitrous oxide mixtures												
	Nitrous oxide	2.2	UN1070		2.2, 5.1.	A14	306	304	314, 315.	75 kg	150 kg	A	40
	Nitrous oxide, refrigerated liquid	2.2	UN2201		2.2, 5.1.	B6, T75, TP5, TP22	None	304	314, 315.	Forbidden	Forbidden	B	40
	Nitroxylenes, liquid	6.1	UN1665	II	6.1	IB2, T7, TP2	153	202	243	5 L	60 L	A	
	Nitroxylenes, solid	6.1	UN3447	II	6.1	IB8, IP2, IP4, T3, TP33	153	212	242	25 kg	100 kg	A	
	Nitroxylol, see Nitroxylenes												
	Nonanes	3	UN1920	III	3	B1, IB3, T2, TP1	150	203	242	60 L	220 L	A	
	Non-flammable gas, n.o.s., see Compressed gas, *etc. or* Liquefied gas, *etc*												
	Nonliquefied gases, see Compressed gases, *etc*												
	Nonliquefied hydrocarbon gas, see Hydrocarbon gas mixture, compressed, n.o.s.												
	Nonyltrichlorosilane	8	UN1799	II	8	A7, B2, B6, IB2, N34, T7, TP2, TP13	None	202	242	Forbidden	30 L	C	40
	Nordhausen acid, see Sulfuric acid, fuming *etc*												
	2,5-Norbornadiene, stabilized, *see* Bicyclo *2,2,1* hepta-2,5-diene, stabilized												
	Octadecyltrichlorosilane	8	UN1800	II	8	A7, B2, B6, IB2, N34, T7, TP2, TP13	None	202	242	Forbidden	30 L	C	40
	Octadiene	3	UN2309	II	3	B1, IB2, T4, TP1	150	202	242	5 L	60 L	B	
	1,7-Octadine-3,5-diyne-1,8-dimethoxy-9-octadecynoic acid	Forbidden											
	Octafluorobut-2-ene *or* Refrigerant gas R 1318	2.2	UN2422		2.2		None	304	314, 315.	75 kg	150 kg	A	
	Octafluorocyclobutane, *or* Refrigerant gas RC 318	2.2	UN1976		2.2	T50	None	304	314, 315.	75 kg	150 kg	A	
	Octafluoropropane*or* Refrigerant gas R 218	2.2	UN2424		2.2	T50	None	304	314, 315.	75 kg	150 kg	A	
	Octanes	3	UN1262	II	3	IB2, T4, TP1	150	202	242	5 L	60 L	B	
	Octogen, *etc. see* Cyclotetramethylene tetranitramine, *etc.*												
	Octolite *or* Octol, *dry or wetted with less than 15 percent water, by mass*	1.1D	UN0266	II	1.1D		None	62	None	Forbidden	Forbidden	10	
	Octonal	1.1D	UN0496		1.1D		None	62	None	Forbidden	Forbidden	10	
	Octyl aldehydes	3	UN1191	III	3	B1, IB3, T2, TP1	150	203	242	60 L	220 L	A	
	Octyltrichlorosilane	8	UN1801	II	8	A7, B2, B6, IB2, N34, T7, TP2, TP13	None	202	242	Forbidden	30 L	C	40
	Oil gas, compressed	2.3	UN1071		2.3, 2.1.	6	None	304	314, 315.	Forbidden	25 kg	D	40
	Oleum, see Sulfuric acid, fuming												
	Organic peroxide type A, liquid or solid	Forbidden											
G	Organic peroxide type B, liquid	5.2	UN3101	II	5.2, 1	53	152	225	None	Forbidden	Forbidden	D	12, 40, 52, 53
G	Organic peroxide type B, liquid, temperature controlled	5.2	UN3111	II	5.2, 1	53	None	225	None	Forbidden	Forbidden	D	2, 40, 52, 53
G	Organic peroxide type B, solid	5.2	UN3102	II	5.2, 1	53	152	225	None	Forbidden	Forbidden	D	12, 40, 52, 53
G	Organic peroxide type B, solid, temperature controlled	5.2	UN3112	II	5.2, 1	53	None	225	None	Forbidden	Forbidden	D	2, 40, 52, 53
G	Organic peroxide type C, liquid	5.2	UN3103	II	5.2		152	225	None	5 L	10 L	D	12, 40, 52, 53
G	Organic peroxide type C, liquid, temperature controlled	5.2	UN3113	II	5.2		None	225	None	Forbidden	Forbidden	D	2, 40, 52, 53
G	Organic peroxide type C, solid	5.2	UN3104	II	5.2		152	225	None	5 kg	10 kg	D	12, 40, 52, 53
G	Organic peroxide type C, solid, temperature controlled	5.2	UN3114	II	5.2		None	225	None	Forbidden	Forbidden	D	2, 40, 52, 53
G	Organic peroxide type D, liquid	5.2	UN3105	II	5.2		152	225	None	5 L	10 L	D	12, 40, 52, 53
G	Organic peroxide type D, liquid, temperature controlled	5.2	UN3115	II	5.2		None	225	None	Forbidden	Forbidden	D	2, 40, 52, 53
G	Organic peroxide type D, solid	5.2	UN3106	II	5.2		152	225	None	5 kg	10 kg	D	12, 40, 52, 53
G	Organic peroxide type D, solid, temperature controlled	5.2	UN3116	II	5.2		None	225	None	Forbidden	Forbidden	D	2, 40, 52, 53
G	Organic peroxide type E, liquid	5.2	UN3107	II	5.2		152	225	None	10 L	25 L	D	12, 40, 52, 53

§ 172.101 HAZARDOUS MATERIALS TABLE—Continued

Symbols	Hazardous materials descriptions and proper shipping names	Hazard class or Division	Identification Numbers	PG	Label Codes	Special provisions (§172.102)	(8) Packaging (§173.***)			(9) Quantity limitations		(10) Vessel stowage	
							Exceptions	Non-bulk	Bulk	Passenger aircraft/rail	Cargo aircraft only	Location	Other
(1)	(2)	(3)	(4)	(5)	(6)	(7)	(8A)	(8B)	(8C)	(9A)	(9B)	(10A)	(10B)
G	Organic peroxide type E, liquid, temperature controlled	5.2	UN3117	II	5.2		None	225	None	Forbidden	Forbidden	D	2, 40, 52, 53
G	Organic peroxide type E, solid	5.2	UN3108	II	5.2		152	225	None	10 kg	25 kg	D	12, 40, 52, 53
G	Organic peroxide type E, solid, temperature controlled	5.2	UN3118	II	5.2		None	225	None	Forbidden	Forbidden	D	2, 40, 52, 53
G	Organic peroxide type F, liquid	5.2	UN3109	II	5.2	IP5	152	225	225	10 L	25 L	D	12, 40, 52, 53
G	Organic peroxide type F, liquid, temperature controlled	5.2	UN3119	II	5.2	IP5	None	225	225	Forbidden	Forbidden	D	2, 40, 52, 53
G	Organic peroxide type F, solid	5.2	UN3110	II	5.2	TP33	152	225	225	10 kg	25 kg	D	12, 40, 52, 53
G	Organic peroxide type F, solid, temperature controlled	5.2	UN3120	II	5.2	TP33	None	225	225	Forbidden	Forbidden	D	2, 52, 53
D	Organic phosphate, mixed with compressed gas *or* Organic phosphate compound, mixed with compressed gas *or* Organic phosphorus compound, mixed with compressed gas.	2.3	NA1955		2.3	3	None	334	None	Forbidden	Forbidden	D	40
	Organic pigments, self-heating	4.2	UN3313	II	4.2	IB8, IP2, IP4, T3, TP33	None	212	241	15 kg	50 kg	C	
				III	4.2	IB8, IP3, T1, TP33	None	213	241	25 kg	100 kg	C	
G	Organoarsenic compound, liquid, n.o.s.	6.1	UN3280	I	6.1	5, T14, TP2, TP13, TP27	None	211	242	5 kg	50 kg	B	
				II	6.1	IB2, T11, TP2, TP27	153	212	242	25 kg	100 kg	B	
				III	6.1	IB3, T7, TP1, TP28	153	213	240	100 kg	200 kg	A	
G	Organoarsenic compound, solid, n.o.s.	6.1	UN3465	I	6.1	IB7, IP1, T6, TP33	None	211	242	5 kg	50 kg	B	
				II	6.1	IB8, IP2, IP4, T3, TP33	153	212	242	25 kg	100 kg	B	
				III	6.1	IB8, IP3, T1, TP33	153	213	240	100 kg	200 kg	A	
	Organochlorine pesticides liquid, flammable, toxic, *flash point less than 23 degrees C*	3	UN2762	I	3, 6.1	T14, TP2, TP13, TP27	None	201	243	Forbidden	30 L	B	40
				II	3, 6.1	IB2, T11, TP2, TP13, TP27	150	202	243	1 L	60 L	B	40
	Organochlorine pesticides, liquid, toxic	6.1	UN2996	I	6.1	T14, TP2, TP13, TP27	None	201	243	1 L	30 L	B	40
				II	6.1	IB2, T11, TP2, TP13, TP27	153	202	243	5 L	60 L	B	40
				III	6.1	IB3, T7, TP2, TP28	153	203	241	60 L	220 L	A	40
	Organochlorine pesticides, liquid, toxic, flammable, *flash point not less than 23 degrees C*	6.1	UN2995	I	6.1, 3	T14, TP2, TP13, TP27	None	201	243	1 L	30 L	B	40
				II	6.1, 3	IB2, T11, TP2, TP13, TP27	153	202	243	5 L	60 L	B	40
				III	6.1, 3	B1, IB3, T7, TP2, TP28	153	203	242	60 L	220 L	A	40
	Organochlorine pesticides, solid, toxic	6.1	UN2761	I	6.1	IB7, IP1, T6, TP33	None	211	242	5 kg	50 kg	A	40
				II	6.1	IB8, IP2, IP4, T3, TP33	153	212	242	25 kg	100 kg	A	40
				III	6.1	IB8, IP3, T1, TP33	153	213	240	100 kg	200 kg	A	40
G	Organometallic compound, toxic, liquid, n.o.s.	6.1	UN3282	I	6.1	T14, TP2, TP13, TP27	None	211	242	5 kg	50 kg	B	
				II	6.1	IB2, T11, TP2, TP27	153	212	242	25 kg	100 kg	B	
				III	6.1	IB3, T7, TP1, TP28	153	213	240	100 kg	200 kg	A	
G	Organometallic compound, toxic, solid, n.o.s.	6.1	UN3467	I	6.1	IB7, IP1, T6, TP33	None	211	242	5 kg	50 kg	B	
				II	6.1	IB8, IP2, IP4, T3, TP33	153	212	242	25 kg	100 kg	B	

	.....	.....		III	6.1	IB8, IP3, T1, TP33	153	213	240	100 kg	200 kg	A	.....
G	Organometallic substance, liquid, pyrophoric	4.2	UN3392	I	4.2	B11, T21, TP2, TP7	None	181	244	Forbidden	Forbidden	D	143
G	Organometallic substance, liquid, pyrophoric, water-reactive	4.2	UN3394	I	4.2, 4.3.	B11, T21, TP2, TP7	None	181	244	Forbidden	Forbidden	D	.....
G	Organometallic substance, liquid, water-reactive	4.3	UN3398	I	4.3	T13, TP2, TP7	None	201	244	Forbidden	Forbidden	E	40, 52
	.....	.....		II	4.3	IB1, T7, TP2, TP7	None	202	243	1 L	5 L	E	40, 52
	.....	.....		III	4.3	IB2, T7, TP2, TP7	None	203	242	5 L	60 L	E	40, 52
G	Organometallic substance, liquid, water-reactive, flammable	4.3	UN3399	I	4.3, 3	T13, TP2, TP7	None	201	244	Forbidden	Fobidden	E	40, 52
	.....	.....		II	4.3, 3	IB1, T7, TP2, TP7	None	202	243	Forbidden	Forbidden	E	40, 52
	.....	.....		III	4.3, 3	IB2, T7, TP2, TP7	None	203	242	Forbidden	Forbidden	E	40, 52
G	Organometallic substance, solid, pyrophoric	4.2	UN3391	I	4.2	T21, TP7, TP33	None	181	244	Forbidden	Forbidden	D	.....
G	Organometallic substance, solid, pyrophoric, water-reactive	4.2	UN3393	I	4.2, 4.3.	B11, T21, TP7, TP33	None	181	244	Forbidden	Forbidden	D	52
G	Organometallic substance, solid, self-heating	4.2	UN3400	II	4.2	IB6, T3, TP33	None	212	242	15 kg	50 kg	C	.....
	.....	.....		III	4.2	IB8, T1, TP33	None	203	242	25 kg	100 kg	C	.....
G	Organometallic substance, solid, water-reactive	4.3	UN3395	I	4.3	N40, T9, TP7, TP33	None	211	242	Forbidden	Forbidden	E	40, 52
	.....	.....		II	4.3	IB4, T3, TP33	151	212	242	15 kg	50 kg	E	40, 52
	.....	.....		III	4.3	IB6, T1, TP33	151	213	241	25 kg	100 kg	E	40, 52
G	Organometallic substance, solid, water-reactive, flammable	4.3	UN3396	I	4.3, 4.1.	N40, T9, TP7, TP33	None	211	242	Forbidden	Forbidden	E	40, 52
	.....	.....		II	4.3, 4.1.	IB4, T3, TP33	151	212	242	15 kg	50 kg	E	40, 52
	.....	.....		III	4.3, 4.1.	IB6, T1, TP33	151	213	241	25 kg	100 kg	E	40, 52
G	Organometallic substance, solid, water-reactive, self-heating	4.3	UN3397	I	4.3, 4.2.	N40, T9, TP7, TP33	None	211	242	Forbidden	Forbidden	E	40, 52
	.....	.....		II	4.3, 4.2.	IB4, T3, TP33	None	212	242	15 kg	50 kg	E	40, 52
	.....	.....		III	4.3, 4.2.	IB6, T1, TP33	None	213	241	25 kg	100 kg	E	40, 52
	Organophosphorus compound, toxic, flammable, n.o.s.	6.1	UN3279	I	6.1, 3	5, T14, TP2, TP13, TP27	None	201	243	1 L	30 L	B	40
	.....	.....		II	6.1, 3	IB2, T11, TP2, TP13, TP27	153	202	243	5 L	60 L	B	40
G	Organophosphorus compound, toxic, liquid, n.o.s.	6.1	UN3278	I	6.1	5, T14, TP2, TP13, TP27	None	201	243	1 L	30 L	B	.....
	.....	.....		II	6.1	IB2, T11, TP2, TP27	153	202	243	5 L	60 L	B	.....
	.....	.....		III	6.1	IB3, T7, TP1, TP28	153	203	241	60 L	220 L	A	.....
G	Organophosphorus compound, toxic, solid, n.o.s.	6.1	UN3464	I	6.1	IB7, IP1, T6, TP33	None	211	242	5 kg	50 kg	B	.....
	.....	.....		II	6.1	IB8, IP2, IP4, T3, TP33	153	212	242	25 kg	100 kg	B	.....
	.....	.....		III	6.1	IB8, IP3, T1, TP33	153	213	240	100 kg	200 kg	A	.....
	Organophosphorus pesticides, liquid, flammable, toxic, *flash point less than 23 degrees C*	3	UN2784	I	3, 6.1	T14, TP2, TP13, TP27	None	201	243	Forbidden	30 L	B	40
	.....	.....		II	3, 6.1	IB2, T11, TP2, TP13, TP27	150	202	243	1 L	60 L	B	40
	Organophosphorus pesticides, liquid, toxic	6.1	UN3018	I	6.1	N76, T14, TP2, TP13, TP27	None	201	243	1 L	30 L	B	40
	.....	.....		II	6.1	IB2, N76, T11, TP2, TP13, TP27	153	202	243	5 L	60 L	B	40
	.....	.....		III	6.1	IB3, N76, T7, TP2, TP28	153	203	241	60 L	220 L	A	40
	Organophosphorus pesticides, liquid, toxic, flammable, *flash point not less than 23 degrees C* ..	6.1	UN3017	I	6.1, 3	N76, T14, TP2, TP13, TP27	None	201	243	1 L	30 L	B	40
	.....	.....		II	6.1, 3	IB2, N76, T11, TP2, TP13, TP27	153	202	243	5 L	60 L	B	40
	.....	.....		III	6.1, 3	B1, IB3, N76, T7, TP2, TP28	153	203	242	60 L	220 L	A	40
	Organophosphorus pesticides, solid, toxic	6.1	UN2783	I	6.1	IB7, IP1, N77, T6, TP33	None	211	242	5 kg	50 kg	A	40
	.....	.....		II	6.1	IB8, IP2, IP4, N77, T3, TP33	153	212	242	25 kg	100 kg	A	40
	.....	.....		III	6.1	IB8, IP3, N77, T1, TP33	153	213	240	100 kg	200 kg	A	40

§ 172.101 HAZARDOUS MATERIALS TABLE—Continued

Symbols	Hazardous materials descriptions and proper shipping names	Hazard class or Division	Identification Numbers	PG	Label Codes	Special provisions (§172.102)	(8) Packaging (§173.***)			(9) Quantity limitations		(10) Vessel stowage	
							Exceptions	Non-bulk	Bulk	Passenger aircraft/rail	Cargo aircraft only	Location	Other
(1)	(2)	(3)	(4)	(5)	(6)	(7)	(8A)	(8B)	(8C)	(9A)	(9B)	(10A)	(10B)
	Organotin compounds, liquid, n.o.s.	6.1	UN2788	I	6.1	A3, N33, N34, T14, TP2, TP13, TP27	None	201	243	1 L	30 L	B	40
				II	6.1	A3, IB2, N33, N34, T11, TP2, TP13, TP27	153	202	243	5 L	60 L	A	40
				III	6.1	IB3, T7, TP2, TP28	153	203	241	60 L	220 L	A	40
	Organotin compounds, solid, n.o.s.	6.1	UN3146	I	6.1	A5, IB7, IP1, T6, TP33	None	211	242	5 kg	50 kg	B	40
				II	6.1	IB8, IP2, IP4, T3, TP33	153	212	242	25 kg	100 kg	A	40
				III	6.1	IB8, IP3, T1, TP33	153	213	240	100 kg	200 kg	A	40
	Organotin pesticides, liquid, flammable, toxic, *flash point less than 23 degrees C*	3	UN2787	I	3, 6.1	T14, TP2, TP13, TP27	None	201	243	Forbidden	30 L	B	40
				II	3, 6.1	IB2, T11, TP2, TP13, TP27	150	202	243	1 L	60 L	B	40
	Organotin pesticides, liquid, toxic	6.1	UN3020	I	6.1	T14, TP2, TP13, TP27	None	201	243	1 L	30 L	B	40
				II	6.1	IB2, T11, TP2, TP13, TP27	153	202	243	5 L	60 L	B	40
				III	6.1	IB3, T7, TP2, TP28	153	203	241	60 L	220 L	A	40
	Organotin pesticides, liquid, toxic, flammable, *flash point not less than 23 degrees C*	6.1	UN3019	I	6.1, 3	T14, TP2, TP13, TP27	None	201	243	1 L	30 L	B	40
				II	6.1, 3	IB2, T11, TP2, TP13, TP27	153	202	243	5 L	60 L	B	40
				III	6.1, 3	B1, IB3, T7, TP2, TP28	153	203	242	60 L	220 L	A	40
	Organotin pesticides, solid, toxic	6.1	UN2786	I	6.1	IB7, IP1, T6, TP33	None	211	242	5 kg	50 kg	A	40
				II	6.1	IB8, IP2, IP4, T3, TP33	153	212	242	25 kg	100 kg	A	40
				III	6.1	IB8, IP3, T1, TP33	153	213	240	100 kg	200 kg	A	40
	Orthonitroaniline, see Nitroanilines *etc*												
	Osmium tetroxide	6.1	UN2471	I	6.1	A8, IB7, IP1, N33, N34, T6, TP33	None	211	242	5 kg	50 kg	B	40
D G	Other regulated substances, liquid, n.o.s.	9	NA3082	III	9	IB3, T2, TP1	155	203	241	No limit	No limit	A	
D G	Other regulated substances, solid, n.o.s.	9	NA3077	III	9	B54, IB8, IP2, T1, TP33	155	213	240	No limit	No limit	A	
G	Oxidizing liquid, corrosive, n.o.s.	5.1	UN3098	I	5.1, 8	A6	None	201	244	Forbidden	2.5 L	D	13, 56, 58, 106, 138
				II	5.1, 8	IB1	None	202	243	1 L	5 L	B	34, 56, 58, 106, 138
				III	5.1, 8	IB2	152	203	242	2.5 L	30 L	B	34, 56, 58, 106, 138
G	Oxidizing liquid, n.o.s.	5.1	UN3139	I	5.1	127, A2, A6	None	201	243	Forbidden	2.5 L	D	56, 58, 106, 138
				II	5.1	127, A2, IB2	152	202	242	1 L	5 L	B	56, 58, 106, 138
				III	5.1	127, A2, IB2	152	203	241	2.5 L	30 L	B	56, 58, 106, 138

G	Oxidizing liquid, toxic, n.o.s.	5.1	UN3099	I	5.1, 6.1.	A6	None	201	244	Forbidden	2.5 L	D	56, 58, 106, 138
				II	5.1, 6.1.	IB1	152	202	243	1 L	5 L	B	56, 58, 95, 106, 138
				III	5.1, 6.1.	IB2	152	203	242	2.5 L	30 L	B	56, 58, 95, 106, 138
G	Oxidizing solid, corrosive, n.o.s.	5.1	UN3085	I	5.1, 8		None	211	242	1 kg	15 kg	D	13, 56, 58, 106, 138
				II	5.1, 8	IB6, IP2, T3, TP33	None	212	242	5 kg	25 kg	B	13, 34, 56, 58, 106, 138
				III	5.1, 8	IB8, IP3, T1, TP33	152	213	240	25 kg	100 kg	B	13, 34, 56, 58, 106, 138
G	Oxidizing solid, flammable, n.o.s.	5.1	UN3137	I	5.1, 4.1.		None	214	214	Forbidden	Forbidden		
G	Oxidizing solid, n.o.s.	5.1	UN1479	I	5.1	IB5, IP1	None	211	242	1 kg	15 kg	D	56, 58, 106, 138
				II	5.1	IB8, IP2, IP4, T3, TP33	152	212	240	5 kg	25 kg	B	56, 58, 106, 138
				III	5.1	IB8, IP3, T1, TP33	152	213	240	25 kg	100 kg	B	56, 58, 106, 138
G	Oxidizing solid, self-heating, n.o.s.	5.1	UN3100	I	5.1, 4.2.		None	214	214	Forbidden	Forbidden		
				II	5.1, 4.2.		None	214	214	Forbidden	Forbidden		
G	Oxidizing solid, toxic, n.o.s.	5.1	UN3087	I	5.1, 6.1.		None	211	242	1 kg	15 kg	D	56, 58, 106, 138
				II	5.1, 6.1.	IB6, IP2, T3, TP33	152	212	242	5 kg	25 kg	B	56, 58, 95, 106, 138
				III	5.1, 6.1.	IB8, IP3, T1, TP33	152	213	240	25 kg	100 kg	B	56, 58, 95, 106, 138
G	Oxidizing solid, water-reactive, n.o.s.	5.1	UN3121		5.1, 4.3.		None	214	214	Forbidden	Forbidden		
	Oxygen and carbon dioxide mixtures, see Carbon dioxide and oxygen mixtures												
	Oxygen, compressed	2.2	UN1072		2.2, 5.1.	A14, A52	306	302	314, 315.	75 kg	150 kg	A	
	Oxygen difluoride, compressed	2.3	UN2190		2.3, 5.1, 8.	1	None	304	None	Forbidden	Forbidden	D	13, 40, 89, 90
	Oxygen generator, chemical *(including when contained in associated equipment, e.g., passenger service units (PSUs), portable breathing equipment (PBE), etc)*..	5.1	UN3356	II	5.1	60, A51	None	212	None	Forbidden	25 kg gross	D	56, 58, 69, 106
+	Oxygen generator, chemical, spent	9	NA3356	III	9	61	None	213	None	Forbidden	Forbidden	A	
	Oxygen, mixtures with rare gases, see Rare gases and oxygen mixtures												
	Oxygen, refrigerated liquid *(cryogenic liquid)*	2.2	UN1073		2.2, 5.1.	T75, TP5, TP22	320	316	318	Forbidden	Forbidden	D	
	Paint *including paint, lacquer, enamel, stain, shellac solutions, varnish, polish, liquid filler, and liquid lacquer base.*	3	UN1263	I	3	T11, TP1, TP8	150	201	243	1 L	30 L	E	
				II	3	149, B52, IB2, T4, TP1, TP8	150	173	242	5 L	60 L	B	
				III	3	B1, B52, IB3, T2, TP1	150	173	242	60 L	220 L	A	
	Paint *or* Paint related material	8	UN3066	II	8	B2, IB2, T7, TP2	154	173	242	1 L	30 L	A	
				III	8	B52, IB3, T4, TP1	154	173	241	5 L	60 L	A	
	Paint related material *including paint thinning, drying, removing, or reducing compound*	3	UN1263	I	3	T11, TP1, TP8	150	201	243	1 L	30 L	E	
				II	3	149, B52, IB2, T4, TP1, TP8	150	173	242	5 L	60 L	B	

§ 172.101 HAZARDOUS MATERIALS TABLE—Continued

Symbols	Hazardous materials descriptions and proper shipping names	Hazard class or Division	Identification Numbers	PG	Label Codes	Special provisions (§172.102)	(8) Packaging (§173.***) Exceptions	Non-bulk	Bulk	(9) Quantity limitations Passenger aircraft/rail	Cargo aircraft only	(10) Vessel stowage Location	Other
(1)	(2)	(3)	(4)	(5)	(6)	(7)	(8A)	(8B)	(8C)	(9A)	(9B)	(10A)	(10B)
	.....	.....		III	3	B1, B52, IB3, T2, TP1	150	173	242	60 L	220 L	A	.....
	Paper, unsaturated oil treated *incompletely dried (including carbon paper)*	4.2	UN1379	III	4.2	IB8, IP3	None	213	241	Forbidden	Forbidden	A	.....
	Paraformaldehyde	4.1	UN2213	III	4.1	A1, IB8, IP3, T1, TP33	151	213	240	25 kg	100 kg	A	.....
	Paraldehyde	3	UN1264	III	3	B1, IB3, T2, TP1	150	203	242	60 L	220 L	A	.....
	Paranitroaniline, solid, see Nitroanilines *etc*	.....			.....		.....	.....	.....	.....	.....		.....
D	Parathion and compressed gas mixture	2.3	NA1967	.....	2.3	3	None	334	245	Forbidden	Forbidden	E	40
	Paris green, solid, see Copper acetoarsenite	.....			.....		.....	.....	.....	.....	.....		.....
A W	PCB, *see* Polychlorinated biphenyls	.....			.....		.....	.....	.....	.....	.....		.....
+	Pentaborane	4.2	UN1380	I	4.2, 6.1.	1	None	205	245	Forbidden	Forbidden	D	.....
	Pentachloroethane	6.1	UN1669	II	6.1	IB2, T7, TP2	153	202	243	5 L	60 L	A	40
	Pentachlorophenol	6.1	UN3155	II	6.1	IB8, IP2, IP4, T3, TP33	153	212	242	25 kg	100 kg	A	.....
	Pentaerythrite tetranitrate (dry)	Forbidden			.....		.....	.....	.....	.....	.....		.....
	Pentaerythrite tetranitrate mixture, desensitized, solid, n.o.s. *with more than 10 percent but not more than 20 percent PETN, by mass.*	4.1	UN3344	II	4.1	118, N85	None	214	None	Forbidden	Forbidden	E	.....
	Pentaerythrite tetranitrate *or* Pentaerythritol tetranitrate *or* PETN, *with not less than 7 percent wax by mass.*	1.1D	UN0411	II	1.1D ..		None	62	None	Forbidden	Forbidden	10	.....
	Pentaerythrite tetranitrate, wetted *or* Pentaerythritol tetranitrate, wetted, *or* PETN, wetted *with not less than 25 percent water, by mass, or* Pentaerythrite tetranitrate, *or* Pentaerythritol tetranitrate *or* PETN, desensitized *with not less than 15 percent phlegmatizer by mass.*	1.1D	UN0150	II	1.1D ..	121	None	62	None	Forbidden	Forbidden	10	.....
	Pentaerythritol tetranitrate, *see* Pentaerythrite tetranitrate, *etc*	.....			.....		.....	.....	.....	.....	.....		.....
	Pentafluoroethane *or* Refrigerant gas R 125	2.2	UN3220	.....	2.2	T50	306	304	314, 315.	75 kg	150 kg	A	.....
	Pentamethylheptane	3	UN2286	III	3	B1, IB3, T2, TP1	150	203	242	60 L	220 L	A	.....
	Pentane-2,4-dione	3	UN2310	III	3, 6.1	B1, IB3, T4, TP1	150	203	242	60 L	220 L	A	.....
	Pentanes	3	UN1265	I	3	T11, TP2	150	201	243	1 L	30 L	E	.....
	.....	.....		II	3	IB2, IP8, T4, TP1	150	202	242	5 L	60 L	E	.....
	Pentanitroaniline (dry)	Forbidden			.....		.....	.....	.....	.....	.....		.....
	Pentanols	3	UN1105	II	3	IB2, T4, TP1, TP29	150	202	242	5 L	60 L	B	.....
	.....	.....		III	3	B1, B3, IB3, T2, TP1	150	203	242	60 L	220 L	A	.....
	1-Pentene *(n-amylene)*	3	UN1108	I	3	T11, TP2	150	201	243	1 L	30 L	E	.....
	1-Pentol	8	UN2705	II	8	B2, IB2, T7, TP2	154	202	242	1 L	30 L	B	26, 27
	Pentolite, *dry or wetted with less than 15 percent water, by mass*	1.1D	UN0151	II	1.1D ..		None	62	None	Forbidden	Forbidden	10	.....
	Pepper spray, see Aerosols, *etc. or* Self-defense spray, non-pressurized	.....			.....		.....	.....	.....	.....	.....		.....
	Perchlorates, inorganic, aqueous solution, n.o.s.	5.1	UN3211	II	5.1	IB2, T4, TP1	152	202	242	1 L	5 L	B	56, 58, 133
	.....	.....		III	5.1	IB2, T4, TP1	152	202	241	2.5 L	30 L	B	56, 58, 69, 133
	Perchlorates, inorganic, n.o.s.	5.1	UN1481	II	5.1	IB6, IP2, T3, TP33	152	212	242	5 kg	25 kg	A	56, 58
	.....	.....		III	5.1	IB8, IP3, T1, TP33	152	213	240	25 kg	100 kg	A	56, 58
	Perchloric acid, with more than 72 percent acid by mass	Forbidden			.....		.....	.....	.....	.....	.....		.....
	Perchloric acid *with more than 50 percent but not more than 72 percent acid, by mass*	5.1	UN1873	I	5.1, 8	A2, A3, N41, T10, TP1, TP12	None	201	243	Forbidden	2.5 L	D	66
	Perchloric acid *with not more than 50 percent acid by mass*	8	UN1802	II	8, 5.1	IB2, N41, T7, TP2	None	202	243	Forbidden	30 L	C	66
	Perchloroethylene, see Tetrachloroethylene	.....			.....		.....	.....	.....	.....	.....		.....
	Perchloromethyl mercaptan	6.1	UN1670	I	6.1	2, B9, B14, B32, B74, N34, T20, TP2, TP13, TP38, TP45	None	227	244	Forbidden	Forbidden	D	40
	Perchloryl fluoride	2.3	UN3083	.....	2.3, 5.1.	2, B9, B14	None	302	314, 315.	Forbidden	Forbidden	D	40
	Percussion caps, see Primers, cap type	.....			.....		.....	.....	.....	.....	.....		.....
	Perfluoro-2-butene, see Octafluorobut-2-ene	.....			.....		.....	.....	.....	.....	.....		.....
	Perfluoro(ethyl vinyl ether)	2.1	UN3154	.....	2.1		306	302, 304, 305.	314, 315.	Forbidden	150 kg	E	40

	Perfluoro(methyl vinyl ether)	2.1	UN3153		2.1	T50	306	302, 304, 305.	314, 315.	Forbidden	150 kg	E	40
	Perfumery products *with flammable solvents*	3	UN1266	II	3	149, IB2, T4, TP1, TP8	150	202	242	15 L	60 L	B	
				III	3	B1, IB3, T2, TP1	150	203	242	60 L	220 L	A	
	Permanganates, inorganic, aqueous solution, n.o.s.	5.1	UN3214	II	5.1	26, IB2, T4, TP1	152	202	242	1 L	5 L	D	56, 58, 133, 138
	Permanganates, inorganic, n.o.s.	5.1	UN1482	II	5.1	26, A30, IB6, IP2, T3, TP33	152	212	242	5 kg	25 kg	D	56, 58, 138
				III	5.1	26, A30, IB8, IP3, T1, TP33	152	213	240	25 kg	100 kg	D	56, 58, 138
	Peroxides, inorganic, n.o.s.	5.1	UN1483	II	5.1	A7, A20, IB6, IP2, N34, T3, TP33	None	212	242	5 kg	25 kg	A	13, 52, 66, 75
				III	5.1	A7, A20, IB8, IP3, N34, T1, TP33	152	213	240	25 kg	100 kg	A	13, 52, 66, 75
	Peroxyacetic acid, with more than 43 percent and with more than 6 percent hydrogen peroxide	Forbidden											
	Persulfates, inorganic, aqueous solution, n.o.s.	5.1	UN3216	III	5.1	IB2, T4, TP1, TP29	152	203	241	2.5 L	30 L	A	56, 133
	Persulfates, inorganic, n.o.s.	5.1	UN3215	III	5.1	IB8, IP3, T1, TP33	152	213	240	25 kg	100 kg	A	56, 58
G	Pesticides, liquid, flammable, toxic, *flash point less than 23 degrees C*	3	UN3021	I	3, 6.1	B5, T14, TP2, TP13, TP27	None	201	243	Forbidden	30 L	B	
				II	3, 6.1	IB2, T11, TP2, TP13, TP27	150	202	243	1 L	60 L	B	
G	Pesticides, liquid, toxic, flammable, n.o.s. *flash point not less than 23 degrees C*	6.1	UN2903	I	6.1, 3	T14, TP2, TP13, TP27	None	201	243	1 L	30 L	B	40
				II	6.1, 3	IB2, T11, TP2, TP13, TP27	153	202	243	5 L	60 L	B	40
				III	6.1, 3	B1, IB3, T7, TP2	153	203	242	60 L	220 L	A	40
G	Pesticides, liquid, toxic, n.o.s.	6.1	UN2902	I	6.1	T14, TP2, TP13, TP27	None	201	243	1 L	30 L	B	40
				II	6.1	IB2, T11, TP2, TP13, TP27	153	202	243	5 L	60 L	B	40
				III	6.1	IB3, T7, TP2, TP28	153	203	241	60 L	220 L	A	40
G	Pesticides, solid, toxic, n.o.s.	6.1	UN2588	I	6.1	IB7, T6, TP33	None	211	242	5 kg	50 kg	A	40
				II	6.1	IB8, IP2, IP4, T3, TP33	153	212	242	25 kg	100 kg	A	40
				III	6.1	IB8, IP3, T1, TP33	153	213	240	100 kg	200 kg	A	40
	PETN, *see* Pentaerythrite tetranitrate												
	PETN/TNT, *see* Pentolite, *etc*												
	Petrol, *see* Gasoline												
	Petroleum crude oil	3	UN1267	I	3	144, T11, TP1, TP8	150	201	243	1 L	30 L	E	
				II	3	144, IB2, T4, TP1, TP8	150	202	242	5 L	60 L	B	
				III	3	144, B1, IB3, T2, TP1	150	203	242	60 L	220 L	A	
	Petroleum distillates, n.o.s. *or* Petroleum products, n.o.s.	3	UN1268	I	3	144, T11, TP1, TP8	150	201	243	1 L	30 L	E	
				II	3	144, IB2, T7, TP1, TP8, TP28	150	202	242	5 L	60 L	B	
				III	3	144, B1, IB3, T4, TP1, TP29	150	203	242	60 L	220 L	A	
	Petroleum gases, liquefied *or* Liquefied petroleum gas	2.1	UN1075		2.1	T50	306	304	314, 315.	Forbidden	150 kg	E	40
D	Petroleum oil	3	NA1270	I	3	144, T11, TP1	None	201	243	1 L	30 L	E	
				II	3	144, IB2, T7, TP1, TP8, TP28	150	202	242	5 L	60 L	B	
				III	3	144, B1, IB3, T4, TP1, TP29	150	203	242	60 L	220 L	A	
	Phenacyl bromide	6.1	UN2645	II	6.1	IB8, IP2, IP4, T3, TP33	153	212	242	25 kg	100 kg	B	40
+	Phenetidines	6.1	UN2311	III	6.1	IB3, T4, TP1	153	203	241	60 L	220 L	A	
	Phenol, molten	6.1	UN2312	II	6.1	B14, T7, TP3	None	202	243	Forbidden	Forbidden	B	40
+	Phenol, solid	6.1	UN1671	II	6.1	IB8, IP2, IP4, N78, T3, TP33	153	212	242	25 kg	100 kg	A	
	Phenol solutions	6.1	UN2821	II	6.1	IB2, T7, TP2	153	202	243	5 L	60 L	A	
				III	6.1	IB3, T4, TP1	153	203	241	60 L	220 L	A	

§ 172.101 HAZARDOUS MATERIALS TABLE—Continued

Symbols	Hazardous materials descriptions and proper shipping names	Hazard class or Division	Identification Numbers	PG	Label Codes	Special provisions (§172.102)	(8) Packaging (§173.***) Exceptions	Non-bulk	Bulk	(9) Quantity limitations Passenger aircraft/rail	Cargo aircraft only	(10) Vessel stowage Location	Other
(1)	(2)	(3)	(4)	(5)	(6)	(7)	(8A)	(8B)	(8C)	(9A)	(9B)	(10A)	(10B)
	Phenolsulfonic acid, liquid	8	UN1803	II	8	B2, IB2, N41, T7, TP2	154	202	242	1 L	30 L	C	14
	Phenoxyacetic acid derivative pesticide, liquid, flammable, toxic *flash point less than 23 degrees C.*	3	UN3346	I	3, 6.1	T14, TP2, TP13, TP27	None	201	243	Forbidden	30 L	B	40
				II	3, 6.1	IB2, T11, TP2, TP13, TP27	150	202	243	1 L	60 L	B	40
	Phenoxyacetic acid derivative pesticide, liquid, toxic	6.1	UN3348	I	6.1	T14, TP2, TP13, TP27	None	201	243	1 L	30 L	B	40
				II	6.1	IB2, T11, TP2, TP27	153	202	243	5 L	60 L	B	40
				III	6.1	IB3, T7, TP2, TP28	153	203	241	60 L	220 L	A	40
	Phenoxyacetic acid derivative pesticide, liquid, toxic, flammable, *flash point not less than 23 degrees C.*	6.1	UN3347	I	6.1, 3	T14, TP2, TP13, TP27	None	201	243	1 L	30 L	B	40
				II	6.1, 3	IB2, T11, TP2, TP13, TP27	153	202	243	5 L	60 L	B	40
				III	6.1, 3	IB3, T7, TP2, TP28	153	203	241	60 L	220 L	A	40
	Phenoxyacetic acid derivative pesticide, solid, toxic	6.1	UN3345	I	6.1	IB7, IP1, T6, TP33	None	211	242	5 kg	50 kg	A	40
				II	6.1	IB8, IP2, IP4, T3, TP33	153	212	242	25 kg	100 kg	A	40
				III	6.1	IB8, IP3, T1, TP33	153	213	240	100 kg	200 kg	A	40
	Phenyl chloroformate	6.1	UN2746	II	6.1, 8	IB2, T7, TP2, TP13	153	202	243	1 L	30 L	A	12, 13, 21, 25, 40, 100
	Phenyl isocyanate	6.1	UN2487	I	6.1, 3	2, B9, B14, B32, B74, B77, N33, N34, T20, TP2, TP13, TP38, TP45	None	227	244	Forbidden	Forbidden	D	40
	Phenyl mercaptan	6.1	UN2337	I	6.1, 3	2, B9, B14, B32, B74, B77, T20, TP2, TP13, TP38, TP45	None	227	244	Forbidden	Forbidden	B	40, 52
	Phenyl phosphorus dichloride	8	UN2798	II	8	B2, B15, IB2, T7, TP2	154	202	242	Forbidden	30 L	B	40
	Phenyl phosphorus thiodichloride	8	UN2799	II	8	B2, B15, IB2, T7, TP2	154	202	242	Forbidden	30 L	B	40
	Phenylacetonitrile, liquid	6.1	UN2470	III	6.1	IB3, T4, TP1	153	203	241	60 L	220 L	A	52
	Phenylacetyl chloride	8	UN2577	II	8	B2, IB2, T7, TP2	154	202	242	1 L	30 L	C	40
	Phenylcarbylamine chloride	6.1	UN1672	I	6.1	2, B9, B14, B32, B74, T20, TP2, TP13, TP38, TP45	None	227	244	Forbidden	Forbidden	D	40
	m-Phenylene diaminediperchlorate (dry)	Forbidden											
+	Phenylenediamines *(o-; m-; p-;)*	6.1	UN1673	III	6.1	IB8, IP3, T1, TP33	153	213	240	100 kg	200 kg	A	
	Phenylhydrazine	6.1	UN2572	II	6.1	IB2, T7, TP2	153	202	243	5 L	60 L	A	40
	Phenylmercuric acetate	6.1	UN1674	II	6.1	IB8, IP2, IP4, T3, TP33	153	212	242	25 kg	100 kg	A	
	Phenylmercuric compounds, n.o.s.	6.1	UN2026	I	6.1	IB7, IP1, T6, TP33	None	211	242	5 kg	50 kg	A	
				II	6.1	IB8, IP2, IP4, T3, TP33	153	212	242	25 kg	100 kg	A	
				III	6.1	IB8, IP3, T1, TP33	153	213	240	100 kg	200 kg	A	
	Phenylmercuric hydroxide	6.1	UN1894	II	6.1	IB8, IP2, IP4, T3, TP33	153	212	242	25 kg	100 kg	A	
	Phenylmercuric nitrate	6.1	UN1895	II	6.1	IB8, IP2, IP4, T3, TP33	153	212	242	25 kg	100 kg	A	
	Phenyltrichlorosilane	8	UN1804	II	8	A7, B6, IB2, N34, T7, TP2	None	202	242	Forbidden	30 L	C	40
	Phosgene	2.3	UN1076		2.3, 8	1, B7, B46	None	192	314	Forbidden	Forbidden	D	40

9-Phosphabicyclononanes *or* Cyclooctadiene phosphines	4.2	UN2940	II	4.2	A19, IB6, IP2, T3, TP33	None	212	241	15 kg	50 kg	A	
Phosphine	2.3	UN2199		2.3, 2.1.	1	None	192	245	Forbidden	Forbidden	D	40
Phosphoric acid solution	8	UN1805	III	8	A7, IB3, N34, T4, TP1	154	203	241	5 L	60 L	A	
Phosphoric acid, solid	8	UN3453	III	8	IB8, IP3, T1, TP33	154	213	240	25 kg	100 kg	A	
Phosphoric acid triethyleneimine, see Tris-(1-aziridiyl)phosphine oxide, solution												
Phosphoric anhydride, see Phosphorus pentoxide												
Phosphorous acid	8	UN2834	III	8	IB8, IP3, T1, TP33	154	213	240	25 kg	100 kg	A	48
Phosphorus, amorphous	4.1	UN1338	III	4.1	A1, A19, B1, B9, B26, IB8, IP3, T1, TP33	None	213	243	25 kg	100 kg	A	74
Phosphorus bromide, see Phosphorus tribromide												
Phosphorus chloride, see Phosphorus trichloride												
Phosphorus heptasulfide, *free from yellow or white phosphorus*	4.1	UN1339	II	4.1	A20, IB4, N34, T3, TP33	None	212	240	15 kg	50 kg	B	74
Phosphorus oxybromide	8	UN1939	II	8	B8, IB8, IP2, IP4, N41, N43, T3, TP33	None	212	240	Forbidden	50 kg	C	12, 40
Phosphorus oxybromide, molten	8	UN2576	II	8	B2, B8, IB1, N41, N43, T7, TP3, TP13	None	202	242	Forbidden	Forbidden	C	40
+ Phosphorus oxychloride	8	UN1810	II	8, 6.1	2, B9, B14, B32, B74, B77, N34, T20, TP2, TP38, TP45	None	227	244	Forbidden	Forbidden	C	40
Phosphorus pentabromide	8	UN2691	II	8	A7, IB8, IP2, IP4, N34, T3, TP33	154	212	240	Forbidden	50 kg	B	12, 40, 53, 55
Phosphorus pentachloride	8	UN1806	II	8	A7, IB8, IP2, IP4, N34, T3, TP33	None	212	240	Forbidden	50 kg	C	40, 44, 89, 100, 141
Phosphorus	2.3	UN2198		2.3, 8	2, B9, B14	None	302, 304.	314, 315.	Forbidden	Forbidden	D	40
Phosphorus pentasulfide, *free from yellow or white phosphorus*	4.3	UN1340	II	4.3, 4.1.	A20, B59, IB4, T3, TP33	151	212	242	15 kg	50 kg	B	74
Phosphorus pentoxide	8	UN1807	II	8	A7, IB8, IP2, IP4, N34, T3, TP33	154	212	240	15 kg	50 kg	A	
Phosphorus sesquisulfide, *free from yellow or white phosphorus*	4.1	UN1341	II	4.1	A20, IB4, N34, T3, TP33	None	212	240	15 kg	50 kg	B	74
Phosphorus tribromide	8	UN1808	II	8	A3, A6, A7, B2, B25, IB2, N34, N43, T7, TP2	None	202	242	Forbidden	30 L	C	40
Phosphorus trichloride	6.1	UN1809	I	6.1, 8	2, B9, B14, B15, B32, B74, B77, N34, T20, TP2, TP13, TP38, TP45	None	227	244	Forbidden	Forbidden	C	40
Phosphorus trioxide	8	UN2578	III	8	IB8, IP3, T1, TP33	154	213	240	25 kg	100 kg	A	12
Phosphorus trisulfide, *free from yellow or white phosphorus*	4.1	UN1343	II	4.1	A20, IB4, N34, T3, TP33	None	212	240	15 kg	50 kg	B	74
Phosphorus, white dry *or* Phosphorus, white, under water *or* Phosphorus white, in solution *or* Phosphorus, yellow dry *or* Phosphorus, yellow, under water *or* Phosphorus, yellow, in solution.	4.2	UN1381	I	4.2, 6.1.	B9, B26, N34, T9, TP3, TP31	None	188	243	Forbidden	Forbidden	E	
Phosphorus white, molten	4.2	UN2447	I	4.2, 6.1.	B9, B26, N34, T21, TP3, TP7, TP26	None	188	243	Forbidden	Forbidden	D	
Phosphorus (white or red) and a chlorate, mixtures of	Forbidden											
Phosphoryl chloride, see Phosphorus oxychloride												
Phthalic anhydride *with more than .05 percent maleic anhydride*	8	UN2214	III	8	IB8, IP3, T1, TP33	154	213	240	25 kg	100 kg	A	
Picolines	3	UN2313	III	3	B1, IB3, T4, TP1	150	203	242	60 L	220 L	A	40
Picric acid, *see* Trinitrophenol, *etc*												
Picrite, *see* Nitroguanidine, *etc*												
Picryl chloride, *see* Trinitrochlorobenzene												
Pine oil	3	UN1272	III	3	B1, IB3, T2, TP1	150	203	242	60 L	220 L	A	
alpha-Pinene	3	UN2368	III	3	B1, IB3, T2, TP1	150	203	242	60 L	220 L	A	
Piperazine	8	UN2579	III	8	IB8, IP3, T1, TP33	154	213	240	25 kg	100 kg	A	12, 52
Piperidine	8	UN2401	I	8, 3	A10, T10, TP2	None	201	243	0.5 L	2.5 L	B	52
Pivaloyl chloride, see Trimethylacetyl chloride												

§ 172.101 HAZARDOUS MATERIALS TABLE—Continued

Symbols	Hazardous materials descriptions and proper shipping names	Hazard class or Division	Identification Numbers	PG	Label Codes	Special provisions (§172.102)	(8) Packaging (§173.***)			(9) Quantity limitations		(10) Vessel stowage	
							Exceptions	Non-bulk	Bulk	Passenger aircraft/rail	Cargo aircraft only	Location	Other
(1)	(2)	(3)	(4)	(5)	(6)	(7)	(8A)	(8B)	(8C)	(9A)	(9B)	(10A)	(10B)
	Plastic molding compound *in dough, sheet or extruded rope form evolving flammable vapor*	9	UN3314	III	9	32, IB8, IP3, IP7	155	221	221	100 kg	200 kg	A	85, 87
	Plastic solvent, n.o.s., see Flammable liquids, n.o.s.												
	Plastics, nitrocellulose-based, self-heating, n.o.s.	4.2	UN2006	III	4.2		None	213	None	Forbidden	Forbidden	C	
	Poisonous gases, n.o.s., see Compressed *or* liquefied gases, flammable *or* toxic, n.o.s.												
	Polyalkylamines, n.o.s., see Amines, *etc*												
	Polychlorinated biphenyls, liquid	9	UN2315	II	9	9, 81, 140, IB3, T4, TP1	155	202	241	100 L	220 L	A	95
	Polychlorinated biphenyls, solid	9	UN3432	II	9	9, 81, 140, IB8, T3, TP33	155	212	240	100 kg	200 kg	A	95
	Polyester resin kit	3	UN3269		3	40, 149	152	225	None	5 kg	5 kg	B	
	Polyhalogenated biphenyls, liquid *or* Polyhalogenated terphenyls liquid	9	UN3151	II	9	IB2	155	204	241	100 L	220 L	A	95
	Polyhalogenated biphenyls, solid *or* Polyhalogenated terphenyls, solid	9	UN3152	II	9	IB8, IP2, IP4, T3, TP33	155	204	241	100 kg	200 kg	A	95
	Polymeric beads, expandable, *evolving flammable vapor*	9	UN2211	III	9	32, IB8, IP3, IP7, T1, TP33	155	221	221	100 kg	200 kg	A	85, 87
	Potassium	4.3	UN2257	I	4.3	A7, A19, A20, B27, IB4, IP1, N6, N34, T9, TP7, TP33	None	211	244	Forbidden	15 kg	D	52
	Potassium arsenate	6.1	UN1677	II	6.1	IB8, IP2, IP4, T3, TP33	153	212	242	25 kg	100 kg	A	
	Potassium arsenite	6.1	UN1678	II	6.1	IB8, IP2, IP4, T3, TP33	153	212	242	25 kg	100 kg	A	
	Potassium bisulfite solution, see Bisulfites, aqueous solutions, n.o.s.												
	Potassium borohydride	4.3	UN1870	I	4.3	A19, N40	None	211	242	Forbidden	15 kg	E	52
	Potassium bromate	5.1	UN1484	II	5.1	IB8, IP4, T3, TP33	152	212	242	5 kg	25 kg	A	56, 58
	Potassium carbonyl	Forbidden											
	Potassium chlorate	5.1	UN1485	II	5.1	A9, IB8, IP4, N34, T3, TP33	152	212	242	5 kg	25 kg	A	56, 58
	Potassium chlorate, aqueous solution	5.1	UN2427	II	5.1	A2, IB2, T4, TP1	152	202	241	1 L	5 L	B	56, 58, 133
				III	5.1	A2, IB2, T4, TP1	152	203	241	2.5 L	30 L	B	56, 58, 69, 133
	Potassium chlorate mixed with mineral oil, see Explosive, blasting, type C												
	Potassium cuprocyanide	6.1	UN1679	II	6.1	IB8, IP2, IP4, T3, TP33	153	212	242	25 kg	100 kg	A	52
	Potassium cyanide, solid	6.1	UN1680	I	6.1	B69, B77, IB7, IP1, N74, N75, T6, TP33	None	211	242	5 kg	50 kg	B	52
	Potassium cyanide solution	6.1	UN3413	I	6.1	B69, B77, N74, N75, T14, TP2, TP13	None	201	243	1 L	30 L	B	52
				II	6.1	B69, B77, IB2, N74, N75, T11, TP2, TP13, TP27	153	202	243	5 L	60 L	B	52
				III	6.1	B69, B77, IB3, N74, N75, T7, TP2, TP13, TP28	153	203	241	60 L	220 L	A	52
	Potassium dichloro isocyanurate or Potassium dichloro-s-triazinetrione, see Dichloroisocyanuric acid, dry *or* Dichloroisocyanuric acid salts *etc.*												
	Potassium dithionite *or* Potassium hydrosulfite	4.2	UN1929	II	4.2	A8, A19, A20, IB6, IP2, T3, TP33	None	212	241	15 kg	50 kg	E	13
	Potassium fluoride, solid	6.1	UN1812	III	6.1	IB8, IP3, T1, TP33	153	213	240	100 kg	200 kg	A	52
	Potassium fluoride solution	6.1	UN3422	III	6.1	IB3, T4, TP1	153	203	241	60 L	220 L	A	52
	Potassium fluoroacetate	6.1	UN2628	I	6.1	IB7, IP1, T6, TP33	None	211	242	5 kg	50 kg	E	
	Potassium fluorosilicate	6.1	UN2655	III	6.1	IB8, IP3, T1, TP33	153	213	240	100 kg	200 kg	A	52
	Potassium hydrate, see Potassium hydroxide, solid												
	Potassium hydrogen fluoride, see Potassium hydrogen difluoride												
	Potassium hydrogen fluoride solution, see Corrosive liquid, n.o.s.												

Potassium hydrogen sulfate	8	UN2509	II	8	A7, IB8, IP2, IP4, N34, T3, TP33	154	212	240	15 kg	50 kg	A	
Potassium hydrogendifluoride solid	8	UN1811	II	8, 6.1	IB8, IP2, IP4, N3, N34, T3, TP33	154	212	240	15 kg	50 kg	A	25, 40, 52
Potassium hydrogendifluoride solution	8	UN3421	II	8, 6.1	IB2, N3, N34, T7, TP2	154	202	243	1 L	30 L	A	25, 40, 52
			III	8, 6.1	IB3, N3, N34, T4, TP1	154	203	241	5 L	60 L	A	40, 52
Potassium hydrosulfite, *see* Potassium dithionite												
Potassium hydroxide, liquid, see Potassium hydroxide solution												
Potassium hydroxide, solid	8	UN1813	II	8	IB8, IP2, IP4, T3, TP33	154	212	240	15 kg	50 kg	A	
Potassium hydroxide, solution	8	UN1814	II	8	B2, IB2, T7, TP2	154	202	242	1 L	30 L	A	
			III	8	IB3, T4, TP1	154	203	241	5 L	60 L	A	
Potassium hypochlorite, solution, see Hypochlorite solutions, *etc*												
Potassium, metal alloys, liquid	4.3	UN1420	I	4.3	A7, A19, A20, B27	None	201	244	Forbidden	1 L	E	40, 52
Potassium, metal alloys, solid	4.3	UN3403	I	4.3	A19, A20, B27, IB4, IP1, T9, TP7, TP33	None	211	244	Forbidden	15 kg	D	
Potassium metal, liquid alloy, see Alkali metal alloys, liquid, n.o.s.												
Potassium metavanadate	6.1	UN2864	II	6.1	IB8, IP2, IP4, T3, TP33	153	212	242	25 kg	100 kg	A	
Potassium monoxide	8	UN2033	II	8	IB8, IP2, IP4, T3, TP33	154	212	240	15 kg	50 kg	A	29
Potassium nitrate	5.1	UN1486	III	5.1	A1, A29, IB8, IP3, T1, TP33	152	213	240	25 kg	100 kg	A	
Potassium nitrate and sodium nitrite mixtures	5.1	UN1487	II	5.1	B78, IB8, IP4, T3, TP33	152	212	240	5 kg	25 kg	A	56, 58
Potassium nitrite	5.1	UN1488	II	5.1	IB8, IP4, T3, TP33	152	212	242	5 kg	25 kg	A	56, 58
Potassium perchlorate	5.1	UN1489	II	5.1	IB6, IP2, T3, TP33	152	212	242	5 kg	25 kg	A	56, 58
Potassium permanganate	5.1	UN1490	II	5.1	IB8, IP4, T3, TP33	152	212	240	5 kg	25 kg	D	56, 58, 138
Potassium peroxide	5.1	UN1491	I	5.1	A20, IB6, IP1, N34	None	211	None	Forbidden	15 kg	B	13, 52, 66, 75
Potassium persulfate	5.1	UN1492	III	5.1	A1, A29, IB8, IP3, T1, TP33	152	213	240	25 kg	100 kg	A	56, 58
Potassium phosphide	4.3	UN2012	I	4.3, 6.1.	A19, N40	None	211	None	Forbidden	15 kg	E	40, 52, 85
Potassium selenate, see Selenates *or* Selenites												
Potassium selenite, see Selenates *or* Selenites												
Potassium sodium alloys, solid	4.3	UN3404	I	4.3	A19, B27, N34, N40, T9, TP7, TP33	None	211	244	Forbidden	15 kg	D	52
Potassium sodium alloys, liquid	4.3	UN1422	I	4.3	A7, A19, B27, N34, N40, T9, TP3, TP7, TP31	None	201	244	Forbidden	1 L	E	40, 52
Potassium sulfide, anhydrous *or* Potassium sulfide *with less than 30 percent water of crystallization.*	4.2	UN1382	II	4.2	A19, A20, B16, IB6, IP2, N34, T3, TP33	None	212	241	15 kg	50 kg	A	52
Potassium sulfide, hydrated *with not less than 30 percent water of crystallization*	8	UN1847	II	8	IB8, IP2, IP4, T3, TP33	154	212	240	15 kg	50 kg	A	52
Potassium superoxide	5.1	UN2466	I	5.1	A20, IB6, IP1	None	211	None	Forbidden	15 kg	B	13, 52, 66, 75
Powder cake, wetted *or* Powder paste, wetted *with not less than 17 percent alcohol by mass*	1.1C	UN0433	II	1.1C		None	62	None	Forbidden	Forbidden	10	
Powder cake, wetted *or* Powder paste, wetted *with not less than 25 percent water, by mass*	1.3C	UN0159	II	1.3C		None	62	None	Forbidden	Forbidden	10	
Powder paste, *see* Powder cake, *etc*												
Powder, smokeless	1.1C	UN0160	II	1.1C		None	62	None	Forbidden	Forbidden		26E
Powder, smokeless	1.3C	UN0161	II	1.3C		None	62	None	Forbidden	Forbidden		26E
Power device, explosive, see Cartridges, power device												
Primers, cap type	1.4S	UN0044	II	None		None	62	None	25 kg	100 kg	05	
Primers, cap type	1.1B	UN0377	II	1.1B		None	62	None	Forbidden	Forbidden	11	
Primers, cap type	1.4B	UN0378	II	1.4B		None	62	None	Forbidden	75 kg	06	
Primers, small arms, see Primers, cap type												
Primers, tubular	1.3G	UN0319	II	1.3G		None	62	None	Forbidden	Forbidden	07	
Primers, tubular	1.4G	UN0320	II	1.4G		None	62	None	Forbidden	75 kg	06	
Primers, tubular	1.4S	UN0376	II	None		None	62	None	25 kg	100 kg	05	
Printing ink, *flammable or* Printing ink related material *(including printing ink thinning or reducing compound), flammable.*	3	UN1210	I	3	T11, TP1, TP8	150	173	243	1 L	30 L	E	
			II	3	149, IB2, T4, TP1, TP8	150	173	242	5 L	60 L	B	
			III	3	B1, IB3, T2, TP1	150	173	242	60 L	220 L	A	

§ 172.101 HAZARDOUS MATERIALS TABLE—Continued

Symbols	Hazardous materials descriptions and proper shipping names	Hazard class or Division	Identification Numbers	PG	Label Codes	Special provisions (§172.102)	(8) Packaging (§173.***)			(9) Quantity limitations		(10) Vessel stowage	
							Exceptions	Non-bulk	Bulk	Passenger aircraft/rail	Cargo aircraft only	Location	Other
(1)	(2)	(3)	(4)	(5)	(6)	(7)	(8A)	(8B)	(8C)	(9A)	(9B)	(10A)	(10B)
	Projectiles, illuminating, see Ammunition, illuminating, *etc*												
	Projectiles, *inert with tracer*	1.4S	UN0345	II	1.4S			62	None	25 kg	100 kg	01	
	Projectiles, *inert, with tracer*	1.3G	UN0424	II	1.3G			62	None	Forbidden	Forbidden	03	
	Projectiles, *inert, with tracer*	1.4G	UN0425	II	1.4G			62	None	Forbidden	75 kg	02	
	Projectiles, *with burster or expelling charge*	1.2D	UN0346	II	1.2D			62	None	Forbidden	Forbidden	03	
	Projectiles, *with burster or expelling charge*	1.4D	UN0347	II	1.4D			62	None	Forbidden	75 kg	02	
	Projectiles, *with burster or expelling charge*	1.2F	UN0426	II	1.2F			62	None	Forbidden	Forbidden	08	
	Projectiles, *with burster or expelling charge*	1.4F	UN0427	II	1.4F			62	None	Forbidden	Forbidden	08	
	Projectiles, *with burster or expelling charge*	1.2G	UN0434	II	1.2G			62	None	Forbidden	Forbidden	03	
	Projectiles, *with burster or expelling charge*	1.4G	UN0435	II	1.4G			62	None	Forbidden	75 kg	02	
	Projectiles, *with bursting charge*	1.1F	UN0167	II	1.1F			62	None	Forbidden	Forbidden	08	
	Projectiles, *with bursting charge*	1.1D	UN0168	II	1.1D			62	None	Forbidden	Forbidden	03	
	Projectiles, *with bursting charge*	1.2D	UN0169	II	1.2D			62	None	Forbidden	Forbidden	03	
	Projectiles, *with bursting charge*	1.2F	UN0324	II	1.2F			62	None	Forbidden	Forbidden	08	
	Projectiles, *with bursting charge*	1.4D	UN0344	II	1.4D			62	None	Forbidden	75 kg	02	
	Propadiene, stabilized	2.1	UN2200		2.1		None	304	314, 315.	Forbidden	150 kg	B	40
	Propadiene mixed with methyl acetylene, see Methyl acetylene and propadiene mixtures, stabilized.												
	Propane *see also* Petroleum gases, liquefied	2.1	UN1978		2.1	19, T50	306	304	314, 315.	Forbidden	150 kg	E	40
	Propanethiols	3	UN2402	II	3	A6, IB2, T4, TP1, TP13	150	202	242	5 L	60 L	E	95, 102
	n-Propanol *or* Propyl alcohol, normal	3	UN1274	II	3	B1, IB2, T4, TP1	150	202	242	5 L	60 L	B	
				III	3	B1, IB3, T2, TP1	150	203	242	60 L	220 L	A	
	Propellant, liquid	1.3C	UN0495	II	1.3C	37	None	62	None	Forbidden	Forbidden	10	
	Propellant, liquid	1.1C	UN0497	II	1.1C	37	None	62	None	Forbidden	Forbidden	10	
	Propellant, solid	1.1C	UN0498	II	1.1C		None	62	None	Forbidden	Forbidden		26E
	Propellant, solid	1.3C	UN0499	II	1.3C		None	62	None	Forbidden	Forbidden		26E
	Propellant, solid	1.4C	UN0501		1.4C		None	62	None	Forbidden	Forbidden	A	24E
	Propionaldehyde	3	UN1275	II	3	IB2, T7, TP1	150	202	242	5 L	60 L	E	
	Propionic acid	8	UN1848	III	8	IB3, T4, TP1	154	203	241	5 L	60 L	A	
	Propionic anhydride	8	UN2496	III	8	IB3, T4, TP1	154	203	241	5 L	60 L	A	
	Propionitrile	3	UN2404	II	3, 6.1	IB2, T7, TP1, TP13	None	202	243	Forbidden	60 L	E	40
	Propionyl chloride	3	UN1815	II	3, 8	IB1, T7, TP1	150	202	243	1 L	5 L	B	40
	n-Propyl acetate	3	UN1276	II	3	IB2, T4, TP1	150	202	242	5 L	60 L	B	
	Propyl alcohol, *see* Propanol												
	n-Propyl benzene	3	UN2364	III	3	B1, IB3, T2, TP1	150	203	242	60 L	220 L	A	
	n-Propyl chloroformate	6.1	UN2740	I	6.1, 3, 8.	2, B9, B14, B32, B74, B77, N34, T20, TP2, TP13, TP38, TP44	None	227	244	Forbidden	Forbidden	B	21, 40, 100
	Propyl chloride see 1-Chloropropane												
	Propyl formates	3	UN1281	II	3	IB2, T4, TP1	150	202	242	5 L	60 L	B	
	n-Propyl isocyanate	6.1	UN2482	I	6.1, 3	1, B9, B14, B30, B72, T22, TP2, TP13, TP38, TP44	None	226	244	Forbidden	Forbidden	D	40
	Propyl mercaptan, see Propanethiols												
	n-Propyl nitrate	3	UN1865	II	3	IB99	150	202	None	5 L	60 L	D	44, 89, 90, 100
	Propylamine	3	UN1277	II	3, 8	A7, IB2, N34, T7, TP1	150	202	243	1 L	5 L	E	40
	Propylene *see also* Petroleum gases, liquefied	2.1	UN1077		2.1	19, T50	306	304	314, 315.	Forbidden	150 kg	E	40
	Propylene chlorohydrin	6.1	UN2611	II	6.1, 3	IB2, T7, TP2, TP13	153	202	243	5 L	60 L	A	12, 40, 48
	Propylene oxide	3	UN1280	I	3	A3, N34, T11, TP2, TP7	None	201	243	1 L	30 L	E	40
	Propylene tetramer	3	UN2850	III	3	B1, IB3, T2, TP1	150	203	242	60 L	220 L	A	
	1,2-Propylenediamine	8	UN2258	II	8, 3	A3, A6, IB2, N34, T7, TP2	None	202	243	1 L	30 L	A	40
	Propyleneimine, stabilized	3	UN1921	I	3, 6.1	A3, N34, T14, TP2, TP13	None	201	243	1 L	30 L	B	40

	Propyltrichlorosilane	8	UN1816	II	8, 3	A7, B2, B6, IB2, N34, T7, TP2, TP13	None	202	243	Forbidden	30 L	C	40
	Prussic acid, see Hydrogen cyanide												
	Pyrethroid pesticide, liquid, flammable, toxic, *flash point less than 23 degrees C*	3	UN3350	I	3, 6.1	T14, TP2, TP13, TP27	None	201	243	Forbidden	30 L	B	40
				II	3, 6.1	IB2, T11, TP2, TP13, TP27	150	202	243	1 L	60 L	B	40
	Pyrethroid pesticide, liquid toxic	6.1	UN3352	I	6.1	T14, TP2, TP13, TP27	None	211	242	1 L	30 L	A	40
				II	6.1	IB2, T11, TP2, TP27	153	212	242	5 L	60 L	A	40
				III	6.1	IB3, T7, TP2, TP28	153	213	240	60 L	220 L	A	40
	Pyrethroid pesticide, liquid, toxic, flammable, *flash point not less than 23 degrees C*	6.1	UN3351	I	6.1, 3	T14, TP2, TP13, TP27	None	201	243	1 L	30 L	B	40
				II	6.1, 3	IB2, T11, TP2, TP13, TP27	153	202	243	5 L	60 L	B	40
				III	6.1, 3	IB3, T7, TP2, TP28	153	203	241	60 L	220 L	B	40
	Pyrethroid pesticide, solid, toxic	6.1	UN3349	I	6.1	IB7, IP1, T6, TP33	None	211	242	5 kg	50 kg	A	40
				II	6.1	IB8, IP2, IP4, T3, TP33	153	212	242	25 kg	100 kg	A	40
				III	6.1	IB8, IP3, T1, TP33	153	213	240	100 kg	200 kg	A	40
	Pyridine	3	UN1282	II	3	IB2, T4, TP2	None	202	242	5 L	60 L	B	21, 100
	Pyridine perchlorate	Forbidden											
G	Pyrophoric liquid, inorganic, n.o.s.	4.2	UN3194	I	4.2		None	181	244	Forbidden	Forbidden	D	18
G	Pyrophoric liquids, organic, n.o.s.	4.2	UN2845	I	4.2	B11, T22, TP2, TP7	None	181	244	Forbidden	Forbidden	D	18
G	Pyrophoric metals, n.o.s., *or* Pyrophoric alloys, n.o.s.	4.2	UN1383	I	4.2	B11, T21, TP7, TP33	None	187	242	Forbidden	Forbidden	D	
G	Pyrophoric solid, inorganic, n.o.s.	4.2	UN3200	I	4.2	T21, TP7, TP33	None	187	242	Forbidden	Forbidden	D	
G	Pyrophoric solids, organic, n.o.s.	4.2	UN2846	I	4.2		None	187	242	Forbidden	Forbidden	D	
	Pyrosulfuryl chloride	8	UN1817	II	8	B2, IB2, T8, TP2, TP12	154	202	242	1 L	30 L	C	40
	Pyroxylin solution or solvent, see Nitrocellulose												
	Pyrrolidine	3	UN1922	II	3, 8	IB2, T7, TP1	150	202	243	1 L	5 L	B	40
	Quebrachitol pentanitrate	Forbidden											
	Quicklime, see Calcium oxide												
	Quinoline	6.1	UN2656	III	6.1	IB3, T4, TP1	153	203	241	60 L	220 L	A	12
	R 12, see Dichlorodifluoromethane												
	R 12B1, see Chlorodifluorobromomethane												
	R 13, see Chlorotrifluoromethane												
	R 13B1, see Bromotrifluoromethane												
	R 14, see Tetrafluoromethane												
	R 21, see Dichlorofluoromethane												
	R 22, see Chlorodifluoromethane												
	R 114, see Dichlorotetrafluoroethane												
	R 115, see Chloropentafluoroethane												
	R 116, see Hexafluoroethane												
	R 124, see Chlorotetrafluoroethane												
	R 133a, see Chlorotrifluoroethane												
	R 152a, see Difluoroethane												
	R 500, see Dichlorodifluoromethane and difluorethane, *etc*												
	R 502, see Chlorodifluoromethane and chloropentafluoroethane mixture, *etc*												
	R 503, see Chlorotrifluoromethane and trifluoromethane, *etc*												
	Radioactive material, excepted package-articles manufactured from natural uranium *or* depleted uranium *or* natural thorium.	7	UN2909		None		422, 426.	422, 426.	422, 426.			A	
	Radioactive material, excepted package-empty packaging	7	UN2908		Empty		422, 428.	422, 428.	422, 428.			A	
	Radioactive material, excepted package-instruments *or* articles	7	UN2911		None		422, 424.	422, 424.				A	
	Radioactive material, excepted package-limited quantity of material	7	UN2910		None		421, 422.	421, 422.	421, 422.			A	
	Radioactive material, low specific activity (LSA-I) *non fissile or fissile-excepted*	7	UN2912		7	A56, T5, TP4, W7	421, 422, 428.	427	427			A	95, 129
	Radioactive material, low specific activity (LSA-II) *non fissile or fissile-excepted*	7	UN3321		7	A56, T5, TP4, W7	421, 422, 428.	427	427			A	95, 129
	Radioactive material, low specific activity (LSA-III) *non fissile or fissile excepted*	7	UN3322		7	A56, T5, TP4, W7	421, 422, 428.	427	427			A	95, 129

§ 172.101 HAZARDOUS MATERIALS TABLE—Continued

Symbols	Hazardous materials descriptions and proper shipping names	Hazard class or Division	Identification Numbers	PG	Label Codes	Special provisions (§172.102)	(8) Packaging (§173.***)			(9) Quantity limitations		(10) Vessel stowage	
							Exceptions	Non-bulk	Bulk	Passenger aircraft/rail	Cargo aircraft only	Location	Other
(1)	(2)	(3)	(4)	(5)	(6)	(7)	(8A)	(8B)	(8C)	(9A)	(9B)	(10A)	(10B)
	Radioactive material, surface contaminated objects (SCO-I *or* SCO-II) *non fissile or fissile-excepted.*	7	UN2913	.....	7	A56	421, 422, 428.	427	427	.....	.....	A	95
	Radioactive material, transported under special arrangement, *non fissile or fissile excepted*	7	UN2919	.....	7	A56, 139	.....	.....	.....	.....	.....	A	95, 105
	Radioactive material, transported under special arrangement, fissile	7	UN3331	.....	7	A56, 139	.....	.....	.....	.....	.....	A	95, 105
	Radioactive material, Type A package, fissile *non-special form*	7	UN3327	.....	7	A56, W7, W8	453	417	417	.....	.....	A	95, 105, 131
	Radioactive material, Type A package *non-special form, non fissile or fissile-excepted*	7	UN2915	.....	7	A56, W7, W8	.....	415	415	.....	.....	A	95, 130
	Radioactive material, Type A package, special form *non fissile or fissile-excepted*	7	UN3332	.....	7	A56, W7, W8	.....	415, 476.	415, 476.	.....	.....	A	95
	Radioactive material, Type A package, special form, fissile	7	UN3333	.....	7	A56, W7, W8	453	417, 476.	417, 476.	.....	.....	A	95, 105
	Radioactive material, Type B(M) package, fissile	7	UN3329	.....	7	A56	453	417	417	.....	.....	A	95, 105
	Radioactive material, Type B(M) package *non fissile or fissile-excepted*	7	UN2917	.....	7	A56	.....	416	416	.....	.....	A	95, 105
	Radioactive material, Type B(U) package, fissile	7	UN3328	.....	7	A56	453	417	417	.....	.....	A	95, 105
	Radioactive material, Type B(U) package *non fissile or fissile-excepted*	7	UN2916	.....	7	A56	.....	416	416	.....	.....	A	95, 105
	Radioactive material, uranium hexafluoride *non fissile or fissile-excepted*	7	UN2978	.....	7, 8		423	420, 427.	420, 427.	.....	.....	A	95, 132
I	Radioactive material, uranium hexafluoride, fissile	7	UN2977	.....	7, 8		453	417, 420.	417, 420.	.....	.....	A	95, 132
A W	Rags, oily	4.2	UN1856	III	4.2		151	213	240	Forbidden	Forbidden	A	.....
	Railway torpedo, see Signals, railway track, explosive	.....			.....		.....	.....	.....	.....	.....		.....
	Rare gases and nitrogen mixtures, compressed	2.2	UN1981	.....	2.2		306	302	None	75 kg	150 kg	A	.....
	Rare gases and oxygen mixtures, compressed	2.2	UN1980	.....	2.2	79	306	302	None	75 kg	150 kg	A	.....
	Rare gases mixtures, compressed	2.2	UN1979	.....	2.2		306	302	None	75 kg	150 kg	A	.....
	RC 318, see Octafluorocyclobutane	.....			.....		.....	.....	.....	.....	.....		.....
	RDX and cyclotetramethylenetetranitramine, wetted *or* desensitized *see* RDX and HMX mixtures, wetted or desensitized.	.....			.....		.....	.....	.....	.....	.....		.....
	RDX and HMX mixtures, wetted *with not less than 15 percent water by mass or* RDX and HMX mixtures, desensitized *with not less than 10 percent phlegmatizer by mass.*	1.1D	UN0391	II	1.1D ..		None	62	None	Forbidden	Forbidden	10	.....
	RDX and Octogen mixtures, wetted *or* desensitized *see* RDX and HMX mixtures, wetted *or* desensitized *etc.*	.....			.....		.....	.....	.....	.....	.....		.....
	RDX, see Cyclotrimethylene trinitramine, *etc*	.....			.....		.....	.....	.....	.....	.....		.....
	Receptacles, small, containing gas (gas cartridges) *flammable, without release device, not refillable and not exceeding 1 L capacity.*	2.1	UN2037	.....	2.1		306	304	None	1 kg	15 kg	B	40
	Receptacles, small, containing gas (gas cartridges) *non-flammable, without release device, not refillable and not exceeding 1 L capacity.*	2.2	UN2037	.....	2.2		306	304	None	1 kg	15 kg	B	40
	.....	.....		.....	2.2, 5.1.	A14	306	304	None	1 kg	15 kg	B	40
	Red phosphorus, see Phosphorus, amorphous	.....			.....		.....	.....	.....	.....	.....		.....
	Refrigerant gas R 404A	2.2	UN3337	.....	2.2	T50	306	304	314, 315.	75 kg	150 kg	A	.....
	Refrigerant gas R 407A	2.2	UN3338	.....	2.2	T50	306	304	314, 315.	75 kg	150 kg	A	.....
	Refrigerant gas R 407B	2.2	UN3339	.....	2.2	T50	306	304	314, 315.	75 kg	150 kg	A	.....
	Refrigerant gas R 407C	2.2	UN3340	.....	2.2	T50	306	304	314, 315.	75 kg	150 kg	A	.....
G	Refrigerant gases, n.o.s.	2.2	UN1078	.....	2.2	T50	306	304	314, 315.	75 kg	150 kg	A	.....
D	Refrigerant gases, n.o.s. *or* Dispersant gases, n.o.s.	2.1	NA1954	.....	2.1	T50	306	304	314, 315.	Forbidden	150 kg	D	40
	Refrigerating machines, *containing flammable, non-toxic, liquefied gas*	2.1	UN3358	.....	2.1		306	306	306	Forbidden	Forbidden	C	40
	Refrigerating machines, *containing non-flammable, non-toxic, or ammonia solution (UN2672)* ...	2.2	UN2857	.....	2.2	A53	306, 307.	306	306, 307.	450 kg	450 kg	A	.....
	Regulated medical waste	6.2	UN3291	II	6.2	A13	134	197	197	No limit	No limit	A	40
	Release devices, explosive	1.4S	UN0173	II	1.4S ...		None	62	None	25 kg	100 kg	05	.....
	Resin solution, *flammable*	3	UN1866	I	3	B52, T11, TP1, TP8, TP28	150	201	243	1 L	30 L	E	.....
	.....	.....		II	3	149, B52, IB2, T4, TP1, TP8	150	173	242	5 L	60 L	B	.....
	.....	.....		III	3	B1, B52, IB3, T2, TP1	150	173	242	60 L	220 L	A	.....

Resorcinol	6.1	UN2876	III	6.1	IB8, IP3, T1, TP33	153	213	240	100 kg	200 kg	A	
Rifle grenade, see Grenades, *hand or rifle, etc*												
Rifle powder, see Powder, smokeless *(UN 0160)*												
Rivets, explosive	1.4S	UN0174	II	1.4S		None	62	None	25 kg	100 kg	05	
Road asphalt or tar liquid, see Tars, liquid, *etc*												
Rocket motors	1.3C	UN0186	II	1.3C	109	None	62	None	Forbidden	220 kg	03	
Rocket motors	1.1C	UN0280	II	1.1C	109	None	62	None	Forbidden	Forbidden	03	
Rocket motors	1.2C	UN0281	II	1.2C	109	None	62	None	Forbidden	Forbidden	03	
Rocket motors, liquid fueled	1.2J	UN0395	II	1.2J	109	None	62	None	Forbidden	Forbidden	04	23E
Rocket motors, liquid fueled	1.3J	UN0396	II	1.3J	109	None	62	None	Forbidden	Forbidden	04	23E
Rocket motors with hypergolic liquids *with or without an expelling charge*	1.3L	UN0250	II	1.3L	109	None	62	None	Forbidden	Forbidden	08	8E, 14E, 15E
Rocket motors with hypergolic liquids *with or without an expelling charge*	1.2L	UN0322	II	1.2L	109	None	62	None	Forbidden	Forbidden	08	8E, 14E, 15E
Rockets, line-throwing	1.2G	UN0238	II	1.2G		None	62	None	Forbidden	Forbidden	07	
Rockets, line-throwing	1.3G	UN0240	II	1.3G		None	62	None	Forbidden	75 kg	07	
Rockets, line-throwing	1.4G	UN0453	II	1.4G		None	62	None	Forbidden	75 kg	06	
Rockets, liquid fueled *with bursting charge*	1.1J	UN0397	II	1.1J		None	62	None	Forbidden	Forbidden	04	23E
Rockets, liquid fueled *with bursting charge*	1.2J	UN0398	II	1.2J		None	62	None	Forbidden	Forbidden	04	23E
Rockets, *with bursting charge*	1.1F	UN0180	II	1.1F		None	62	None	Forbidden	Forbidden	08	
Rockets, *with bursting charge*	1.1E	UN0181	II	1.1E		None	62	None	Forbidden	Forbidden	03	
Rockets, *with bursting charge*	1.2E	UN0182	II	1.2E		None	62	None	Forbidden	Forbidden	03	
Rockets, *with bursting charge*	1.2F	UN0295	II	1.2F		None	62	None	Forbidden	Forbidden	08	
Rockets, *with expelling charge*	1.2C	UN0436	II	1.2C		None	62	None	Forbidden	Forbidden	03	
Rockets, *with expelling charge*	1.3C	UN0437	II	1.3C		None	62	None	Forbidden	Forbidden	03	
Rockets, *with expelling charge*	1.4C	UN0438	II	1.4C		None	62	None	Forbidden	75 kg	02	
Rockets, *with inert head*	1.3C	UN0183	II	1.3C		None	62	None	Forbidden	Forbidden	03	
Rockets, *with inert head*	1.2C	UN0502		1.2C		None	62	None	Forbidden	Forbidden	B	1E, 5E
Rosin oil	3	UN1286	II	3	IB2, T4, TP1	150	202	242	5 L	60 L	B	
			III	3	B1, IB3, T2, TP1	150	203	242	60 L	220 L	A	
Rubber solution	3	UN1287	II	3	149, IB2, T4, TP1, TP8	150	202	242	5 L	60 L	B	
Rubber scrap *or* shoddy, *powdered or granulated, not exceeding 840 microns and rubber contend exceeding 45%.*	4.1	UN1345	II	4.1	IB8, IP2, IP4, T3, TP33	151	212	240	15 kg	50 kg	A	
Rubber solution	3	UN1287	III	3	B1, IB3, T2, TP1	150	203	242	60 L	220 L	A	
Rubidium	4.3	UN1423	I	4.3	22, A7, A19, IB4, IP1, N34, N40, N45	None	211	242	Forbidden	15 kg	D	52
Rubidium hydroxide	8	UN2678	II	8	IB8, IP2, IP4, T3, TP33	154	212	240	15 kg	50 kg	A	29
Rubidium hydroxide solution	8	UN2677	II	8	B2, IB2, T7, TP2	154	202	242	1 L	30 L	A	29
			III	8	IB3, T4, TP1	154	203	241	5 L	60 L	A	29
Safety fuse, see Fuse, safety												
Sand acid, see Fluorosilicic acid												
Seed cake, *containing vegetable oil solvent extractions and expelled seeds, with not more than 10 percent of oil and when the amount of moisture is higher than 11 percent, with not more than 20 percent of oil and moisture combined.*	4.2	UN1386	III	None	IB8, IP3, IP7, N7	None	213	241	Forbidden	Forbidden	A	13
Seed cake *with more than 1.5 percent oil and not more than 11 percent moisture*	4.2	UN1386	III	None	IB8, IP3, IP7, N7	None	213	241	Forbidden	Forbidden	E	13
Seed cake *with not more than 1.5 percent oil and not more than 11 percent moisture*	4.2	UN2217	III	None	IB8, IP3, IP7, N7	None	213	241	Forbidden	Forbidden	A	13
Selenates *or* Selenites	6.1	UN2630	I	6.1	IB7, IP1, T6, TP33	None	211	242	5 kg	50 kg	E	
Selenic acid	8	UN1905	I	8	IB7, IP1, N34, T6, TP33	None	211	242	Forbidden	25 kg	A	
Selenium compound, solid, n.o.s.	6.1	UN3283	I	6.1	IB7, IP1, T6, TP33	None	211	242	5 kg	50 kg	B	
Selenium compound, liquid, n.o.s.	6.1	UN3440	I	6.1	T14, TP2, TP27	None	201	243	1 L	30 L	B	
Selenium compound, solid, n.o.s.	6.1	UN3283	II	6.1	IB8, IP2, IP4, T3, TP33	153	212	242	25 kg	100 kg	B	
Selenium compound, liquid, n.o.s.	6.1	UN3440	II	6.1	IB2, T11, TP2, TP27	153	202	243	5 L	60 L	B	
Selenium compound, solid, n.o.s.	6.1	UN3283	III	6.1	IB8, IP3, T1, TP33	153	213	240	100 kg	200 kg	A	
Selenium compound, liquid, n.o.s.	6.1	UN3440	III	6.1	IB3, T7, TP1, TP28	153	203	241	60 L	220 L	A	
Selenium disulfide	6.1	UN2657	II	6.1	IB8, IP2, IP4, T3, TP33	153	212	242	25 kg	100 kg	A	
Selenium hexafluoride	2.3	UN2194		2.3, 8	1	None	302	None	Forbidden	Forbidden	D	40
Selenium nitride	Forbidden											
Selenium oxychloride	8	UN2879	I	8, 6.1	A3, A6, A7, N34, T10, TP2, TP12, TP13	None	201	243	0.5 L	2.5 L	E	40
Self-defense spray, aerosol, see Aerosols, *etc*												

§ 172.101 HAZARDOUS MATERIALS TABLE—Continued

Symbols	Hazardous materials descriptions and proper shipping names	Hazard class or Division	Identification Numbers	PG	Label Codes	Special provisions (§172.102)	(8) Packaging (§173.***)			(9) Quantity limitations		(10) Vessel stowage	
							Exceptions	Non-bulk	Bulk	Passenger aircraft/rail	Cargo aircraft only	Location	Other
(1)	(2)	(3)	(4)	(5)	(6)	(7)	(8A)	(8B)	(8C)	(9A)	(9B)	(10A)	(10B)
+ A D	Self-defense spray, non-pressurized	9	NA3334	III	9	A37	155	203	None	No limit	No limit	A	
G	Self-heating liquid, corrosive, inorganic, n.o.s.	4.2	UN3188	II	4.2, 8	IB2	None	202	243	1 L	5 L	C	
				III	4.2, 8	IB2	None	203	241	5 L	60 L	C	
G	Self-heating liquid, corrosive, organic, n.o.s.	4.2	UN3185	II	4.2, 8	IB2	None	202	243	1 L	5 L	C	
				III	4.2, 8	IB2	None	203	241	5 L	60 L	C	
G	Self-heating liquid, inorganic, n.o.s.	4.2	UN3186	II	4.2	IB2	None	202	242	1 L	5 L	C	
				III	4.2	IB2	None	203	241	5 L	60 L	C	
G	Self-heating liquid, organic, n.o.s.	4.2	UN3183	II	4.2	IB2	None	202	242	1 L	5 L	C	
				III	4.2	IB2	None	203	241	5 L	60 L	C	
G	Self-heating liquid, toxic, inorganic, n.o.s.	4.2	UN3187	II	4.2, 6.1.	IB2	None	202	243	1 L	5 L	C	
				III	4.2, 6.1.	IB2	None	203	241	5 L	60 L	C	
G	Self-heating liquid, toxic, organic, n.o.s.	4.2	UN3184	II	4.2, 6.1.	IB2	None	202	243	1 L	5 L	C	
				III	4.2, 6.1.	IB2	None	203	241	5 L	60 L	C	
G	Self-heating solid, corrosive, inorganic, n.o.s.	4.2	UN3192	II	4.2, 8	IB5, IP2, T3, TP33	None	212	242	15 kg	50 kg	C	
				III	4.2, 8	IB8, IP3, T1, TP33	None	213	242	25 kg	100 kg	C	
G	Self-heating, solid, corrosive, organic, n.o.s.	4.2	UN3126	II	4.2, 8	IB5, IP2, T3, TP33	None	212	242	15 kg	50 kg	C	
				III	4.2, 8	IB8, IP3, T1, TP33	None	213	242	25 kg	100 kg	C	
G	Self-heating solid, inorganic, n.o.s.	4.2	UN3190	II	4.2	IB6, IP2, T3, TP33	None	212	241	15 kg	50 kg	C	
				III	4.2	IB8, IP3, T1, TP33	None	213	241	25 kg	100 kg	C	
G	Self-heating, solid, organic, n.o.s.	4.2	UN3088	II	4.2	IB6, IP2, T3, TP33	None	212	241	15 kg	50 kg	C	
				III	4.2	IB8, IP3, T1, TP33	None	213	241	25 kg	100 kg	C	
G	Self-heating, solid, oxidizing, n.o.s.	4.2	UN3127		4.2, 5.1.		None	214	214	Forbidden	Forbidden		
G	Self-heating solid, toxic, inorganic, n.o.s.	4.2	UN3191	II	4.2, 6.1.	IB5, IP2, T3, TP33	None	212	242	15 kg	50 kg	C	
				III	4.2, 6.1.	IB8, IP3, T1, TP33	None	213	242	25 kg	100 kg	C	
G	Self-heating, solid, toxic, organic, n.o.s.	4.2	UN3128	II	4.2, 6.1.	IB5, IP2, T3, TP33	None	212	242	15 kg	50 kg	C	
				III	4.2, 6.1.	IB8, IP3, T1, TP33	None	213	242	25 kg	100 kg	C	
	Self-propelled vehicle, see Engines *or* Batteries *etc*												
G	Self-reactive liquid type B	4.1	UN3221	II	4.1	53	None	224	None	Forbidden	Forbidden	D	52, 53
G	Self-reactive liquid type B, temperature controlled	4.1	UN3231	II	4.1	53	None	224	None	Forbidden	Forbidden	D	2, 52, 53
G	Self-reactive liquid type C	4.1	UN3223	II	4.1		None	224	None	5 L	10 L	D	52, 53
G	Self-reactive liquid type C, temperature controlled	4.1	UN3233	II	4.1		None	224	None	Forbidden	Forbidden	D	2, 52, 53
G	Self-reactive liquid type D	4.1	UN3225	II	4.1		None	224	None	5 L	10 L	D	52, 53
G	Self-reactive liquid type D, temperature controlled	4.1	UN3235	II	4.1		None	224	None	Forbidden	Forbidden	D	2, 52, 53
G	Self-reactive liquid type E	4.1	UN3227	II	4.1		None	224	None	10 L	25 L	D	52, 53
G	Self-reactive liquid type E, temperature controlled	4.1	UN3237	II	4.1		None	224	None	Forbidden	Forbidden	D	2, 52, 53
G	Self-reactive liquid type F	4.1	UN3229	II	4.1	T23	None	224	None	10 L	25 L	D	52, 53
G	Self-reactive liquid type F, temperature controlled	4.1	UN3239	II	4.1		None	224	None	Forbidden	Forbidden	D	2, 52, 53
G	Self-reactive solid type B	4.1	UN3222	II	4.1	53	None	224	None	Forbidden	Forbidden	D	52, 53
G	Self-reactive solid type B, temperature controlled	4.1	UN3232	II	4.1	53	None	224	None	Forbidden	Forbidden	D	2, 52, 53
G	Self-reactive solid type C	4.1	UN3224	II	4.1		None	224	None	5 kg	10 kg	D	52, 53
G	Self-reactive solid type C, temperature controlled	4.1	UN3234	II	4.1		None	224	None	Forbidden	Forbidden	D	2, 52, 53

G	Self-reactive solid type D	4.1	UN3226	II	4.1		None	224	None	5 kg	10 kg	D	52, 53
G	Self-reactive solid type D, temperature controlled	4.1	UN3236	II	4.1		None	224	None	Forbidden	Forbidden	D	2, 52, 53
G	Self-reactive solid type E	4.1	UN3228	II	4.1		None	224	None	10 kg	25 kg	D	52, 53
G	Self-reactive solid type E, temperature controlled	4.1	UN3238	II	4.1		None	224	None	Forbidden	Forbidden	D	2, 52, 53
G	Self-reactive solid type F	4.1	UN3230	II	4.1		None	224	None	10 kg	25 kg	D	52, 53
G	Self-reactive solid type F, temperature controlled	4.1	UN3240	II	4.1		None	224	None	Forbidden	Forbidden	D	2, 52, 53
	Shale oil	3	UN1288	I	3	T11, TP1, TP8, TP27	None	201	243	1 L	30 L	B	
				II	3	IB2, T4, TP1, TP8	150	202	242	5 L	60 L	B	
				III	3	B1, IB3, T2, TP1	150	203	242	60 L	220 L	A	
	Shaped charges, see Charges, shaped, *etc*												
	Signal devices, hand	1.4G	UN0191	II	1.4G		None	62	None	Forbidden	75 kg	06	
	Signal devices, hand	1.4S	UN0373	II	1.4S		None	62	None	25 kg	100 kg	05	
	Signals, distress, *ship*	1.1G	UN0194	II	1.1G		None	62	None	Forbidden	Forbidden	07	
	Signals, distress, *ship*	1.3G	UN0195	II	1.3G		None	62	None	Forbidden	75 kg	07	
	Signals, highway, see Signal devices, hand												
	Signals, railway track, explosive	1.1G	UN0192	II	1.1G		None	62	None	Forbidden	Forbidden	07	
	Signals, railway track, explosive	1.4S	UN0193	II	1.4S		None	62	None	25 kg	100 kg	05	
	Signals, railway track, explosive	1.3G	UN0492		1.3G		None	62	None	Forbidden	Forbidden	07	
	Signals, railway track, explosive	1.4G	UN0493		1.4G		None	62	None	Forbidden	75 kg	06	
	Signals, ship distress, water-activated, see Contrivances, water-activated, *etc*												
	Signals, smoke	1.1G	UN0196	II	1.1G		None	62	None	Forbidden	Forbidden	07	
	Signals, smoke	1.4G	UN0197	II	1.4G		None	62	None	Forbidden	75 kg	06	
	Signals, smoke	1.2G	UN0313	II	1.2G		None	62	None	Forbidden	Forbidden	07	
	Signals, smoke	1.3G	UN0487	II	1.3G		None	62	None	Forbidden	Forbidden	07	
	Silane	2.1	UN2203		2.1		None	302	None	Forbidden	Forbidden	E	40, 57, 104
	Silicofluoric acid, see Fluorosilicic acid												
	Silicon chloride, see Silicon tetrachloride												
	Silicon powder, amorphous	4.1	UN1346	III	4.1	A1, IB8, IP3, T1, TP33	None	213	240	25 kg	100 kg	A	74
	Silicon tetrachloride	8	UN1818	II	8	A3, A6, B2, B6, IB2, T7, TP2, TP7	154	202	242	1 L	30 L	C	40
	Silicon tetrafluoride	2.3	UN1859		2.3, 8	2	None	302	None	Forbidden	Forbidden	D	40
	Silver acetylide (dry)	Forbidden											
	Silver arsenite	6.1	UN1683	II	6.1	IB8, IP2, IP4, T3, TP33	153	212	242	25 kg	100 kg	A	
	Silver azide (dry)	Forbidden											
	Silver chlorite (dry)	Forbidden											
	Silver cyanide	6.1	UN1684	II	6.1	IB8, IP2, IP4, T3, TP33	153	212	242	25 kg	100 kg	A	40, 52
	Silver fulminate (dry)	Forbidden											
	Silver nitrate	5.1	UN1493	II	5.1	IB8, IP4, T3, TP33	152	212	242	5 kg	25 kg	A	
	Silver oxalate (dry)	Forbidden											
	Silver picrate (dry)	Forbidden											
	Silver picrate, wetted *with not less than 30 percent water, by mass*	4.1	UN1347	I	4.1	23	None	211	None	Forbidden	Forbidden	D	28, 36
	Sludge, acid	8	UN1906	II	8	A3, A7, B2, IB2, N34, T8, TP2, TP12, TP28	None	202	242	Forbidden	30 L	C	14
D	Smokeless powder for small arms (*100 pounds or less*)	4.1	NA3178	I	4.1	16	None	171	None	Forbidden	7.3 kg	A	
	Soda lime *with more than 4 percent sodium hydroxide*	8	UN1907	III	8	IB8, IP3, T1, TP33	154	213	240	25 kg	100 kg	A	
	Sodium	4.3	UN1428	I	4.3	A7, A8, A19, A20, B9, B48, B68, IB4, IP1, N34, T9, TP7, TP33, TP46	None	211	244	Forbidden	15 kg	D	52
	Sodium aluminate, solid	8	UN2812	III	8	IB8, IP3, T1, TP33	154	213	240	25 kg	100 kg	A	
	Sodium aluminate, solution	8	UN1819	II	8	B2, IB2, T7, TP2	154	202	242	1 L	30 L	A	
				III	8	IB3, T4, TP1	154	203	241	5 L	60 L	A	
	Sodium aluminum hydride	4.3	UN2835	II	4.3	A8, A19, A20, IB4, T3, TP33	151	212	242	Forbidden	50 kg	E	52
	Sodium ammonium vanadate	6.1	UN2863	II	6.1	IB8, IP2, IP4, T3, TP33	153	212	242	25 kg	100 kg	A	
	Sodium arsanilate	6.1	UN2473	III	6.1	IB8, IP3, T1, TP33	153	213	240	100 kg	200 kg	A	
	Sodium arsenate	6.1	UN1685	II	6.1	IB8, IP2, IP4, T3, TP33	153	212	242	25 kg	100 kg	A	

§ 172.101 HAZARDOUS MATERIALS TABLE—Continued

Symbols	Hazardous materials descriptions and proper shipping names	Hazard class or Division	Identification Numbers	PG	Label Codes	Special provisions (§172.102)	(8) Packaging (§173.***) Exceptions	Non-bulk	Bulk	(9) Quantity limitations Passenger aircraft/rail	Cargo aircraft only	(10) Vessel stowage Location	Other
(1)	(2)	(3)	(4)	(5)	(6)	(7)	(8A)	(8B)	(8C)	(9A)	(9B)	(10A)	(10B)
	Sodium arsenite, aqueous solutions	6.1	UN1686	II	6.1	IB2, T7, TP2	153	202	243	5 L	60 L	A	
				III	6.1	IB3, T4, TP2	153	203	241	60 L	220 L	A	
	Sodium arsenite, solid	6.1	UN2027	II	6.1	IB8, IP2, IP4, T3, TP33	153	212	242	25 kg	100 kg	A	
	Sodium azide	6.1	UN1687	II	6.1	IB8, IP2, IP4	153	212	242	25 kg	100 kg	A	36, 52, 91
	Sodium bifluoride, see Sodium hydrogendifluoride												
	Sodium bisulfite, solution, see Bisulfites, aqueous solutions, n.o.s.												
	Sodium borohydride	4.3	UN1426	I	4.3	N40	None	211	242	Forbidden	15 kg	E	52
	Sodium borohydride and sodium hydroxide solution, *with not more than 12 percent sodium borohydride and not more than 40 percent sodium hydroxide by mass.*	8	UN3320	II	8	B2, IB2, N34, T7, TP2	154	202	242	1 L	30 L	A	52
				III	8	B2, IB3, N34, T4, TP2	154	203	241	5 L	60 L	A	52
	Sodium bromate	5.1	UN1494	II	5.1	IB8, IP4, T3, TP33	152	212	242	5 kg	25 kg	A	56, 58
	Sodium cacodylate	6.1	UN1688	II	6.1	IB8, IP2, IP4, T3, TP33	153	212	242	25 kg	100 kg	A	52
	Sodium carbonate peroxyhydrate	5.1	UN3378	II	5.1	IB8, IP2, IP4, T3, TP33	152	212	240	5 kg	25 kg	A	13, 48, 75
				III	5.1	IB8, IP3, T1, TP33	152	213	240	25 kg	100 kg	A	13, 48, 75
	Sodium chlorate	5.1	UN1495	II	5.1	A9, IB8, IP4, N34, T3, TP33	152	212	240	5 kg	25 kg	A	56, 58
	Sodium chlorate, aqueous solution	5.1	UN2428	II	5.1	A2, IB2, T4, TP1	152	202	241	1 L	5 L	B	56, 58, 133
				III	5.1	A2, IB2, T4, TP1	152	203	241	2.5 L	30 L	B	56, 58, 69, 133
	Sodium chlorate mixed with dinitrotoluene, see Explosive blasting, type C												
	Sodium chlorite	5.1	UN1496	II	5.1	A9, IB8, IP2, IP4, N34, T3, TP33	None	212	242	5 kg	25 kg	A	56, 58
	Sodium chloroacetate	6.1	UN2659	III	6.1	IB8, IP3, T1, TP33	153	213	240	100 kg	200 kg	A	
	Sodium cuprocyanide, solid	6.1	UN2316	I	6.1	IB7, IP1, T6, TP33	None	211	242	5 kg	50 kg	A	52
	Sodium cuprocyanide, solution	6.1	UN2317	I	6.1	T14, TP2, TP13	None	201	243	1 L	30 L	B	40, 52
	Sodium cyanide, solid	6.1	UN1689	I	6.1	B69, B77, IB7, N74, N75, T6, TP33	None	211	242	5 kg	50 kg	B	52
	Sodium cyanide solution	6.1	UN3414	I	6.1	B69, B77, N74, N75, T14, TP2, TP13	None	201	243	1 L	30 L	B	52
				II	6.1	B69, B77, IB2, N74, N75, T11, TP2, TP13, TP27	153	202	243	5 L	60 L	B	52
				III	6.1	B69, B77, IB3, N74, N75, T7, TP2, TP13, TP28	153	203	241	60 L	220 L	A	52
	Sodium dichloroisocyanurate or Sodium dichloro-s-triazinetrione, see Dichloroisocyanuric acid *etc.*												
	Sodium dinitro-o-cresolate, *dry or wetted with less than 15 percent water, by mass*	1.3C	UN0234	II	1.3C		None	62	None	Forbidden	Forbidden	10	5E
	Sodium dinitro-o-cresolate, wetted *with not less than 10% water, by mass*	4.1	UN3369	I	4.1	162, A8, A19, N41, N84	None	211	None	0.5 kg	0.5 kg	E	36
	Sodium dinitro-o-cresolate, wetted *with not less than 15 percent water, by mass*	4.1	UN1348	I	4.1, 6.1.	23, A8, A19, A20, N41	None	211	None	1 kg	15 kg	E	28, 36
	Sodium dithionite *or* Sodium hydrosulfite	4.2	UN1384	II	4.2	A19, A20, IB6, IP2, T3, TP33	None	212	241	15 kg	50 kg	E	13
	Sodium fluoride, solid	6.1	UN1690	III	6.1	IB8, IP3, T1, TP33	153	213	240	100 kg	200 kg	A	52
	Sodium fluoride solution	6.1	UN3415	III	6.1	IB3, T4, TP1	153	203	241	60 L	220 L	A	52
	Sodium fluoroacetate	6.1	UN2629	I	6.1	IB7, IP1, T6, TP33	None	211	242	5 kg	50 kg	E	
	Sodium fluorosilicate	6.1	UN2674	III	6.1	IB8, IP3, T1, TP33	153	213	240	100 kg	200 kg	A	52
	Sodium hydrate, see Sodium hydroxide, solid												
	Sodium hydride	4.3	UN1427	I	4.3	A19, N40	None	211	242	Forbidden	15 kg	E	52

	Sodium hydrogendifluoride	8	UN2439	II	8	IB8, IP2, IP4, N3, N34, T3, TP33	154	212	240	15 kg	50 kg	A	12, 25, 40, 52
	Sodium hydrosulfide, *with less than 25 percent water of crystallization*	4.2	UN2318	II	4.2	A7, A19, A20, IB6, IP2, T3, TP33	None	212	241	15 kg	50 kg	A	
	Sodium hydrosulfide *with not less than 25 percent water of crystallization*	8	UN2949	II	8	A7, IB8, IP2, IP4, T7, TP2	154	212	240	15 kg	50 kg	A	52
	Sodium hydrosulfite, *see* Sodium dithionite												
	Sodium hydroxide, solid	8	UN1823	II	8	IB8, IP2, IP4, T3, TP33	154	212	240	15 kg	50 kg	A	
	Sodium hydroxide solution	8	UN1824	II	8	B2, IB2, N34, T7, TP2	154	202	242	1 L	30 L	A	
				III	8	IB3, N34, T4, TP1	154	203	241	5 L	60 L	A	
	Sodium hypochlorite, solution, see Hypochlorite solutions *etc*												
	Sodium metal, liquid alloy, see Alkali metal alloys, liquid, n.o.s.												
	Sodium methylate	4.2	UN1431	II	4.2, 8	A7, A19, IB5, IP2, T3, TP33	None	212	242	15 kg	50 kg	B	
	Sodium methylate solutions *in alcohol*	3	UN1289	II	3, 8	IB2, T7, TP1, TP8	150	202	243	1 L	5 L	B	
				III	3, 8	B1, IB3, T4, TP1	150	203	242	5 L	60 L	A	
	Sodium monoxide	8	UN1825	II	8	IB8, IP2, IP4, T3, TP33	154	212	240	15 kg	50 kg	A	
	Sodium nitrate	5.1	UN1498	III	5.1	A1, A29, IB8, IP3, T1, TP33	152	213	240	25 kg	100 kg	A	
	Sodium nitrate and potassium nitrate mixtures	5.1	UN1499	III	5.1	A1, A29, IB8, IP3, T1, TP33	152	213	240	25 kg	100 kg	A	
	Sodium nitrite	5.1	UN1500	III	5.1, 6.1.	A1, A29, IB8, IP3, T1, TP33	152	213	240	25 kg	100 kg	A	56, 58
	Sodium pentachlorophenate	6.1	UN2567	II	6.1	IB8, IP2, IP4, T3, TP33	153	212	242	25 kg	100 kg	A	
	Sodium perborate monohydrate	5.1	UN3377	III	5.1	IB8, IP3, T1, TP33	152	213	240	25 kg	100 kg	A	13, 48, 75
	Sodium perchlorate	5.1	UN1502	II	5.1	IB6, IP2, T3, TP33	152	212	242	5 kg	25 kg	A	56, 58
	Sodium permanganate	5.1	UN1503	II	5.1	IB6, IP2, T3, TP33	152	212	242	5 kg	25 kg	D	56, 58, 138
	Sodium peroxide	5.1	UN1504	I	5.1	A20, IB5, IP1, N34	None	211	None	Forbidden	15 kg	B	13, 52, 66, 75
	Sodium peroxoborate, anhydrous	5.1	UN3247	II	5.1	IB8, IP4, T3, TP33	152	212	240	5 kg	25 kg	A	13, 25
	Sodium persulfate	5.1	UN1505	III	5.1	A1, IB8, IP3, T1, TP33	152	213	240	25 kg	100 kg	A	56, 58
	Sodium phosphide	4.3	UN1432	I	4.3, 6.1.	A19, N40	None	211	None	Forbidden	15 kg	E	40, 52, 85
	Sodium picramate, *dry or wetted with less than 20 percent water, by mass*	1.3C	UN0235	II	1.3C		None	62	None	Forbidden	Forbidden	10	5E
	Sodium picramate, wetted *with not less than 20 percent water, by mass*	4.1	UN1349	I	4.1	23, A8, A19, N41	None	211	None	Forbidden	15 kg	E	28, 36
	Sodium picryl peroxide	Forbidden											
	Sodium potassium alloys, see Potassium sodium alloys												
	Sodium selenate, see Selenates *or* Selenites												
	Sodium sulfide, anhydrous *or* Sodium sulfide *with less than 30 percent water of crystallization*	4.2	UN1385	II	4.2	A19, A20, IB6, IP2, N34, T3, TP33	None	212	241	15 kg	50 kg	A	52
	Sodium sulfide, hydrated *with not less than 30 percent water*	8	UN1849	II	8	IB8, IP2, IP4, T3, TP33	154	212	240	15 kg	50 kg	A	26
	Sodium superoxide	5.1	UN2547	I	5.1	A20, IB6, IP1, N34	None	211	None	Forbidden	15 kg	E	13, 52, 66, 75
	Sodium tetranitride	Forbidden											
G	Solids containing corrosive liquid, n.o.s.	8	UN3244	II	8	49, IB5, T3, TP33	154	212	240	15 kg	50 kg	B	40
G	Solids containing flammable liquid, n.o.s.	4.1	UN3175	II	4.1	47, IB6, IP2, T3, TP33	151	212	240	15 kg	50 kg	B	
G	Solids containing toxic liquid, n.o.s.	6.1	UN3243	II	6.1	48, IB2, T2, TP33	153	212	240	25 kg	100 kg	B	40
	Sounding devices, explosive	1.2F	UN0204	II	1.2F		None	62	None	Forbidden	Forbidden	08	
	Sounding devices, explosive	1.1F	UN0296	II	1.1F		None	62	None	Forbidden	Forbidden	08	
	Sounding devices, explosive	1.1D	UN0374	II	1.1D		None	62	None	Forbidden	Forbidden	07	
	Sounding devices, explosive	1.2D	UN0375	II	1.2D		None	62	None	Forbidden	Forbidden	07	
	Spirits of salt, see Hydrochloric acid												
	Squibs, see Igniters *etc*												
	Stannic chloride, anhydrous	8	UN1827	II	8	B2, IB2, T7, TP2	154	202	242	1 L	30 L	C	
	Stannic chloride pentahydrate	8	UN2440	III	8	IB8, IP3, T1, TP33	154	213	240	25 kg	100 kg	A	

§ 172.101 HAZARDOUS MATERIALS TABLE—Continued

Symbols	Hazardous materials descriptions and proper shipping names	Hazard class or Division	Identification Numbers	PG	Label Codes	Special provisions (§172.102)	(8) Packaging (§173.***) Exceptions	Non-bulk	Bulk	(9) Quantity limitations Passenger aircraft/rail	Cargo aircraft only	(10) Vessel stowage Location	Other
(1)	(2)	(3)	(4)	(5)	(6)	(7)	(8A)	(8B)	(8C)	(9A)	(9B)	(10A)	(10B)
	Stannic phosphide	4.3	UN1433	I	4.3, 6.1.	A19, N40	None	211	242	Forbidden	15 kg	E	40, 52, 85
	Steel swarf, see Ferrous metal borings, *etc*												
	Stibine	2.3	UN2676		2.3, 2.1.	1	None	304	None	Forbidden	Forbidden	D	40
	Storage batteries, wet, see Batteries, *wet etc*												
	Strontium arsenite	6.1	UN1691	II	6.1	IB8, IP2, IP4, T3, TP33	153	212	242	25 kg	100 kg	A	
	Strontium chlorate	5.1	UN1506	II	5.1	A1, A9, IB8, IP2, IP4, N34, T3, TP33	152	212	242	5 kg	25 kg	A	56, 58
	Strontium nitrate	5.1	UN1507	III	5.1	A1, A29, IB8, IP3, T1, TP33	152	213	240	25 kg	100 kg	A	
	Strontium perchlorate	5.1	UN1508	II	5.1	IB6, IP2, T3, TP33	152	212	242	5 kg	25 kg	A	56, 58
	Strontium peroxide	5.1	UN1509	II	5.1	IB6, IP2, T3, TP33	152	212	242	5 kg	25 kg	A	13, 52, 66, 75
	Strontium phosphide	4.3	UN2013	I	4.3, 6.1.	A19, N40	None	211	None	Forbidden	15 kg	E	40, 52, 85
	Strychnine *or* Strychnine salts	6.1	UN1692	I	6.1	IB7, IP1, T6, TP33	None	211	242	5 kg	50 kg	A	40
	Styphnic acid, *see* Trinitroresorcinol, *etc*												
	Styrene monomer, stabilized	3	UN2055	III	3	B1, IB3, T2, TP1	150	203	242	60 L	220 L	A	
G	Substances, explosive, n.o.s.	1.1L	UN0357	II	1.1L	101	None	62	None	Forbidden	Forbidden		8E, 14E, 15E, 17E
G	Substances, explosive, n.o.s.	1.2L	UN0358	II	1.2L	101	None	62	None	Forbidden	Forbidden		8E, 14E, 15E, 17E
G	Substances, explosive, n.o.s.	1.3L	UN0359	II	1.3L	101	None	62	None	Forbidden	Forbidden		8E, 14E, 15E, 17E
G	Substances, explosive, n.o.s.	1.1A	UN0473	II	1.1A	101, 111	None	62	None	Forbidden	Forbidden	12	
G	Substances, explosive, n.o.s.	1.1C	UN0474	II	1.1C	101	None	62	None	Forbidden	Forbidden	10	
G	Substances, explosive, n.o.s.	1.1D	UN0475	II	1.1D	101	None	62	None	Forbidden	Forbidden	10	
G	Substances, explosive, n.o.s.	1.1G	UN0476	II	1.1G	101	None	62	None	Forbidden	Forbidden	08	
G	Substances, explosive, n.o.s.	1.3C	UN0477	II	1.3C	101	None	62	None	Forbidden	Forbidden	10	
G	Substances, explosive, n.o.s.	1.3G	UN0478	II	1.3G	101	None	62	None	Forbidden	Forbidden	08	
G	Substances, explosive, n.o.s.	1.4C	UN0479	II	1.4C	101	None	62	None	Forbidden	75 kg	09	
G	Substances, explosive, n.o.s.	1.4D	UN0480	II	1.4D	101	None	62	None	Forbidden	75 kg	09	
G	Substances, explosive, n.o.s.	1.4S	UN0481	II	1.4S	101	None	62	None	25 kg	75 kg	05	
G	Substances, explosive, n.o.s.	1.4G	UN0485	II	1.4G	101	None	62	None	Forbidden	75 kg	08	
G	Substances, explosive, very insensitive, n.o.s., *or* Substances, EVI, n.o.s.	1.5D	UN0482	II	1.5D	101	None	62	None	Forbidden	Forbidden	10	
	Substituted nitrophenol pesticides, liquid, flammable, toxic, *flash point less than 23 degrees C*	3	UN2780	I	3, 6.1	T14, TP2, TP13, TP27	None	201	243	Forbidden	30 L	B	40
				II	3, 6.1	IB2, T11, TP2, TP13, TP27	150	202	243	1 L	60 L	B	40
	Substituted nitrophenol pesticides, liquid, toxic	6.1	UN3014	I	6.1	T14, TP2, TP13, TP27	None	201	243	1 L	30 L	B	40
				II	6.1	IB2, T11, TP2, TP13, TP27	153	202	243	5 L	60 L	B	40
				III	6.1	IB3, T7, TP2, TP28	153	203	241	60 L	220 L	A	40
	Substituted nitrophenol pesticides, liquid, toxic, flammable, *flash point not less than 23 degrees C.*	6.1	UN3013	I	6.1, 3	T14, TP2, TP13, TP27	None	201	243	1 L	30 L	B	40
				II	6.1, 3	IB2, T11, TP2, TP13, TP27	153	202	243	5 L	60 L	B	40
				III	6.1, 3	B1, IB3, T7, TP2, TP28	153	203	242	60 L	220 L	A	40
	Substituted nitrophenol pesticides, solid, toxic	6.1	UN2779	I	6.1	IB7, IP1, T6, TP33	None	211	242	5 kg	50 kg	A	40

	.....	.....		II	6.1	IB8, IP2, IP4, T3, TP33	153	212	242	25 kg	100 kg	A	40
	.....	.....		III	6.1	IB8, IP3, T1, TP33	153	213	240	100 kg	200 kg	A	40
	Sucrose octanitrate (dry)	Forbidden											
	Sulfamic acid	8	UN2967	III	8	IB8, IP3, T1, TP33	154	213	240	25 kg	100 kg	A	
D	Sulfur	9	NA1350	III	9	10, IB8, IP2	None	None	240	No limit	No limit	A	19, 74
I	Sulfur	4.1	UN1350	III	4.1	30, IB8, IP3, T1, TP33	None	None	240	No limit	No limit	A	19, 74
	Sulfur and chlorate, loose mixtures of	Forbidden											
	Sulfur chlorides	8	UN1828	I	8	5, A3, A7, A10, B10, B77, N34, T20, TP2, TP12	None	201	243	Forbidden	2.5 L	C	40
	Sulfur dichloride, see Sulfur chlorides												
	Sulfur dioxide	2.3	UN1079		2.3, 8	3, B14, T50, TP19	None	304	314, 315.	Forbidden	Forbidden	D	40
	Sulfur dioxide solution, see Sulfurous acid												
	Sulfur hexafluoride	2.2	UN1080		2.2		306	304	314, 315.	75 kg	150 kg	A	
D	Sulfur, molten	9	NA2448	III	9	30, IB3, T1, TP3	None	213	247	Forbidden	Forbidden	C	61
I	Sulfur, molten	4.1	UN2448	III	4.1	30, IB1, T1, TP3	None	213	247	Forbidden	Forbidden	C	61
	Sulfur tetrafluoride	2.3	UN2418		2.3, 8	1	None	302	245	Forbidden	Forbidden	D	40, 52
+	Sulfur trioxide, stabilized	8	UN1829	I	8, 6.1	2, B9, B14, B32, B49, B74, B77, N34, T20, TP4, TP12, TP13, TP25, TP26, TP38, TP45	None	227	244	Forbidden	Forbidden	A	40
	Sulfuretted hydrogen, see Hydrogen sulfide												
	Sulfuric acid, fuming *with less than 30 percent free sulfur trioxide*	8	UN1831	I	8	B84, N34, T20, TP2, TP12, TP13	None	201	243	Forbidden	2.5 L	C	14, 40
+	Sulfuric acid, fuming *with 30 percent or more free sulfur trioxide*	8	UN1831	I	8, 6.1	2, A3, A6, A7, B9, B14, B32, B74, B77, B84, N34, T20, TP2, TP12, TP13	None	227	244	Forbidden	Forbidden	C	14, 40
	Sulfuric acid, spent	8	UN1832	II	8	A3, A7, B2, B83, B84, IB2, N34, T8, TP2, TP12	None	202	242	Forbidden	30 L	C	14
	Sulfuric acid *with more than 51 percent acid*	8	UN1830	II	8	A3, A7, B3, B83, B84, IB2, N34, T8, TP2, TP12	154	202	242	1 L	30 L	C	14
	Sulfuric acid *with not more than 51% acid*	8	UN2796	II	8	A3, A7, B2, B15, IB2, N6, N34, T8, TP2, TP12	154	202	242	1 L	30 L	B	
	Sulfuric and hydrofluoric acid mixtures, *see* Hydrofluoric and sulfuric acid mixtures												
	Sulfuric anhydride, see Sulfur trioxide, stabilized												
	Sulfurous acid	8	UN1833	II	8	B3, IB2, T7, TP2	154	202	242	1 L	30 L	B	40
+	Sulfuryl chloride	8	UN1834	I	8, 6.1	1, B6, B9, B10, B14, B30, B74, B77, N34, T22, TP2, TP12, TP38, TP44	None	226	244	Forbidden	Forbidden	C	40
	Sulfuryl fluoride	2.3	UN2191		2.3	4	None	304	314, 315.	Forbidden	Forbidden	D	40
	Tars, liquid *including road asphalt and oils, bitumen and cut backs*	3	UN1999	II	3	149, B13, IB2, T3, TP3, TP29	150	202	242	5 L	60 L	B	
	.....	.....		III	3	B1, B13, IB3, T1, TP3	150	203	242	60 L	220 L	A	
	Tear gas candles	6.1	UN1700	II	6.1, 4.1.		None	340	None	Forbidden	50 kg	D	40
	Tear gas cartridges, see Ammunition, tear-producing, *etc*												
D	Tear gas devices *with more than 2 percent tear gas substances, by mass*	6.1	NA1693	I	6.1		None	340	None	Forbidden	Forbidden	D	40
	.....	.....		II	6.1		None	340	None	Forbidden	Forbidden	D	40
	Tear gas devices, with not more than 2 percent tear gas substances, by mass, see Aerosols, *etc.*												
	Tear gas grenades, see Tear gas candles												
G	Tear gas substances, liquid, n.o.s.	6.1	UN1693	I	6.1		None	201	None	Forbidden	Forbidden	D	40
	.....	.....		II	6.1	IB2	None	202	None	Forbidden	5 L	D	40
G	Tear gas substance, solid, n.o.s.	6.1	UN3448	I	6.1	T6, TP33	None	211	242	Forbidden	Forbidden	D	40
	.....	.....		II	6.1	IB8, IP2, IP4, T3, TP33	None	212	242	Forbidden	25 kg	D	40
	Tellurium compound, n.o.s.	6.1	UN3284	I	6.1	IB7, IP1, T6, TP33	None	211	242	5 kg	50 kg	B	

§ 172.101 HAZARDOUS MATERIALS TABLE—Continued

Symbols	Hazardous materials descriptions and proper shipping names	Hazard class or Division	Identification Numbers	PG	Label Codes	Special provisions (§172.102)	(8) Packaging (§173.***) Exceptions	Non-bulk	Bulk	(9) Quantity limitations Passenger aircraft/rail	Cargo aircraft only	(10) Vessel stowage Location	Other
(1)	(2)	(3)	(4)	(5)	(6)	(7)	(8A)	(8B)	(8C)	(9A)	(9B)	(10A)	(10B)
	.....	.....		II	6.1	IB8, IP2, IP4, T3, TP33	153	212	242	25 kg	100 kg	B	.....
	.....	.....		III	6.1	IB8, IP3, T1, TP33	153	213	240	100 kg	200 kg	A	.....
	Tellurium hexafluoride	2.3	UN2195	.....	2.3, 8	1	None	302	None	Forbidden	Forbidden	D	40
	Terpene hydrocarbons, n.o.s.	3	UN2319	III	3	B1, IB3, T4, TP1, TP29	150	203	242	60 L	220 L	A	.....
	Terpinolene	3	UN2541	III	3	B1, IB3, T2, TP1	150	203	242	60 L	220 L	A	.....
	Tetraazido benzene quinone	Forbidden			.....		.....	.....	.....	.....	.....		.....
	Tetrabromoethane	6.1	UN2504	III	6.1	IB3, T4, TP1	153	203	241	60 L	220 L	A	.....
	1,1,2,2-Tetrachloroethane	6.1	UN1702	II	6.1	IB2, N36, T7, TP2	153	202	243	5 L	60 L	A	40
	Tetrachloroethylene	6.1	UN1897	III	6.1	IB3, N36, T4, TP1	153	203	241	60 L	220 L	A	40
	Tetraethyl dithiopyrophosphate	6.1	UN1704	II	6.1	IB2, T7, TP2	153	212	242	25 kg	100 kg	D	40
	Tetraethyl silicate	3	UN1292	III	3	B1, IB3, T2, TP1	150	203	242	60 L	220 L	A	.....
	Tetraethylammonium perchlorate (dry)	Forbidden			.....		.....	.....	.....	.....	.....		.....
	Tetraethylenepentamine	8	UN2320	III	8	IB3, T4, TP1	154	203	241	5 L	60 L	A	.....
	1,1,1,2-Tetrafluoroethane *or* Refrigerant gas R 134a	2.2	UN3159	.....	2.2	T50	306	304	314, 315.	75 kg	150 kg	A	.....
	Tetrafluoroethylene, stabilized	2.1	UN1081	.....	2.1		306	304	None	Forbidden	150 kg	E	40
	Tetrafluoromethane *or* Refrigerant gas R 14	2.2	UN1982	.....	2.2		None	302	None	75 kg	150 kg	A	.....
	1,2,3,6-Tetrahydrobenzaldehyde	3	UN2498	III	3	B1, IB3, T2, TP1	150	203	242	60 L	220 L	A	.....
	Tetrahydrofuran	3	UN2056	II	3	IB2, T4, TP1	None	202	242	5 L	60 L	B	.....
	Tetrahydrofurfurylamine	3	UN2943	III	3	B1, IB3, T2, TP1	150	203	242	60 L	220 L	A	.....
	Tetrahydrophthalic anhydrides *with more than 0.05 percent of maleic anhydride*	8	UN2698	III	8	IB8, IP3, T1, TP33	154	213	240	25 kg	100 kg	A	.....
	1,2,3,6-Tetrahydropyridine	3	UN2410	II	3	IB2, T4, TP1	150	202	242	5 L	60 L	B	.....
	Tetrahydrothiophene	3	UN2412	II	3	IB2, T4, TP1	150	202	242	5 L	60 L	B	.....
	Tetramethylammonium hydroxide, solid	8	UN3423	II	8	B2, IB8, IP2, IP4, T3, TP33	154	213	240	15 kg	50 kg	A	52
	Tetramethylammonium hydroxide solution	8	UN1835	II	8	B2, IB2, T7, TP2	154	202	242	1 L	30 L	A	52
	.....	.....		III	8	B2, IB3, T7, TP2	154	203	241	5 L	60 L	A	52
	Tetramethylene diperoxide dicarbamide	Forbidden			.....		.....	.....	.....	.....	.....		.....
	Tetramethylsilane	3	UN2749	I	3	A7, T14, TP2	None	201	243	Forbidden	30 L	D	.....
	Tetranitro diglycerin	Forbidden			.....		.....	.....	.....	.....	.....		.....
	Tetranitroaniline	1.1D	UN0207	II	1.1D		None	62	None	Forbidden	Forbidden	10	.....
+	Tetranitromethane	5.1	UN1510	I	5.1, 6.1.	2, B9, B14, B32, B74, T20, TP2, TP13, TP38, TP44	None	227	None	Forbidden	Forbidden	D	40, 66
	2,3,4,6-Tetranitrophenol	Forbidden			.....		.....	.....	.....	.....	.....		.....
	2,3,4,6-Tetranitrophenyl methyl nitramine	Forbidden			.....		.....	.....	.....	.....	.....		.....
	2,3,4,6-Tetranitrophenylnitramine	Forbidden			.....		.....	.....	.....	.....	.....		.....
	Tetranitroresorcinol (dry)	Forbidden			.....		.....	.....	.....	.....	.....		.....
	2,3,5,6-Tetranitroso-1,4-dinitrobenzene	Forbidden			.....		.....	.....	.....	.....	.....		.....
	2,3,5,6-Tetranitroso nitrobenzene (dry)	Forbidden			.....		.....	.....	.....	.....	.....		.....
	Tetrapropylorthotitanate	3	UN2413	III	3	B1, IB3, T4, TP1	150	203	242	60 L	220 L	A	.....
	Tetrazene, *see* Guanyl nitrosaminoguanyltetrazene	.....			.....		.....	.....	.....	.....	.....		.....
	Tetrazine (dry)	Forbidden			.....		.....	.....	.....	.....	.....		.....
	Tetrazol-1-acetic acid	1.4C	UN0407	II	1.4C		None	62	None	Forbidden	75 kg	09	.....
	1H-Tetrazole	1.1D	UN0504	.....	1.1D		None	62	None	Forbidden	Forbidden	B	1E, 5E
	Tetrazolyl azide (dry)	Forbidden			.....		.....	.....	.....	.....	.....		.....
	Tetryl, *see* Trinitrophenylmethylnitramine	.....			.....		.....	.....	.....	.....	.....		.....
A I W	Textile waste, wet	4.2	UN1857	III	4.2		151	213	240	Forbidden	Forbidden	A	.....
	Thallium chlorate	5.1	UN2573	II	5.1, 6.1.	IB6, IP2, T3, TP33	152	212	242	5 kg	25 kg	A	56, 58
	Thallium compounds, n.o.s.	6.1	UN1707	II	6.1	IB8, IP2, IP4, T3, TP33	153	212	242	25 kg	100 kg	A	.....
	Thallium nitrate	6.1	UN2727	II	6.1, 5.1.	IB6, IP2, T3, TP33	153	212	242	5 kg	25 kg	A	.....
	4-Thiapentanal	6.1	UN2785	III	6.1	IB3, T4, TP1	153	203	241	60 L	220 L	D	25, 49
	Thioacetic acid	3	UN2436	II	3	IB2, T4, TP1	150	202	242	5 L	60 L	B	.....
	Thiocarbamate pesticide, liquid, flammable, toxic, *flash point less than 23 degrees C*	3	UN2772	I	3, 6.1	T14, TP2, TP13, TP27	None	201	243	Forbidden	30 L	B	40

			II	3, 6.1	IB2, T11, TP13, TP27	150	202	243	1 L	60 L	B	40
Thiocarbamate pesticide, liquid, toxic, flammable, *flash point not less than 23 degrees C*	6.1	UN3005	I	6.1, 3	T14, TP2, TP13	None	201	243	1 L	30 L	B	40
			II	6.1, 3	IB2, T11, TP2, TP13, TP27	153	202	243	5 L	60 L	B	40
			III	6.1, 3	IB3, T7, TP2, TP28	153	203	242	60 L	220 L	A	40
Thiocarbamate pesticide, liquid, toxic	6.1	UN3006	I	6.1	T14, TP2, TP13	None	201	243	1 L	30 L	B	40
			II	6.1	IB2, T11, TP2, TP13, TP27	153	202	243	5 L	60 L	B	40
			III	6.1	IB3, T7, TP2, TP28	153	203	241	60 L	220 L	A	40
Thiocarbamate pesticides, solid, toxic	6.1	UN2771	I	6.1	IB7, IP1, T6, TP33	None	211	242	5 kg	50 kg	A	40
			II	6.1	IB8, IP2, IP4, T3, TP33	153	212	242	25 kg	100 kg	A	40
			III	6.1	IB8, IP3, T1, TP33	153	213	240	100 kg	200 kg	A	40
Thiocarbonylchloride, see Thiophosgene												
Thioglycol	6.1	UN2966	II	6.1	IB2, T7, TP2	153	202	243	5 L	60 L	A	
Thioglycolic acid	8	UN1940	II	8	A7, B2, IB2, N34, T7, TP2	154	202	242	1 L	30 L	A	
Thiolactic acid	6.1	UN2936	II	6.1	IB2, T7, TP2	153	202	243	5 L	60 L	A	
Thionyl chloride	8	UN1836	I	8	B6, B10, N34, T10, TP2, TP12, TP13	None	201	243	Forbidden	Forbidden	C	40
Thiophene	3	UN2414	II	3	IB2, T4, TP1	150	202	242	5 L	60 L	B	40
+ Thiophosgene	6.1	UN2474	II	6.1	2, B9, B14, B32, B74, N33, N34, T20, TP2, TP38, TP45	None	227	244	Forbidden	Forbidden	B	40, 52
Thiophosphoryl chloride	8	UN1837	II	8	A3, A7, B2, B8, B25, IB2, N34, T7, TP2	None	202	242	Forbidden	30 L	C	40
Thiourea dioxide	4.2	UN3341	II	4.2	IB6, IP2, T3, TP33	None	212	241	15 kg	50 kg	D	
			III	4.2	IB8, IP3, T1, TP33	None	213	241	25 kg	100 kg	D	
Tin chloride, fuming, see Stannic chloride, anhydrous												
Tin perchloride or Tin tetrachloride, see Stannic chloride, anhydrous												
Tinctures, medicinal	3	UN1293	II	3	IB2, T4, TP1, TP8	150	202	242	5 L	60 L	B	
			III	3	B1, IB3, T2, TP1	150	203	242	60 L	220 L	A	
Tinning flux, see Zinc chloride												
Titanium disulphide	4.2	UN3174	III	4.2	IB8, IP3, T1, TP33	None	213	241	25 kg	100 kg	A	
Titanium hydride	4.1	UN1871	II	4.1	A19, A20, IB4, N34, T3, TP33	None	212	241	15 kg	50 kg	E	
Titanium powder, dry	4.2	UN2546	I	4.2		None	211	242	Forbidden	Forbidden	D	
			II	4.2	A19, A20, IB6, IP2, N5, N34, T3, TP33	None	212	241	15 kg	50 kg	D	
			III	4.2	IB8, IP3, T1, TP33	None	213	241	25 kg	100 kg	D	
Titanium powder, wetted *with not less than 25 percent water (a visible excess of water must be present) (a) mechanically produced, particle size less than 53 microns; (b) chemically produced, particle size less than 840 microns.*	4.1	UN1352	II	4.1	A19, A20, IB6, IP2, N34, T3, TP33	None	212	240	15 kg	50 kg	E	74
Titanium sponge granules *or* Titanium sponge powders	4.1	UN2878	III	4.1	A1, IB8, IP3, T1, TP33	None	213	240	25 kg	100 kg	D	74
+ Titanium tetrachloride	8	UN1838	II	8, 6.1	2, B7, B9, B14, B32, B74, B77, T20, TP2, TP13, TP38, TP45	None	227	244	Forbidden	Forbidden	C	40
Titanium trichloride mixtures	8	UN2869	II	8	A7, IB8, IP2, IP4, N34, T3, TP33	154	212	240	15 kg	50 kg	A	40
			III	8	A7, IB8, IP3, N34, T1, TP33	154	213	240	25 kg	100 kg	A	40
Titanium trichloride, pyrophoric *or* Titanium trichloride mixtures, pyrophoric	4.2	UN2441	I	4.2, 8	N34	None	181	244	Forbidden	Forbidden	D	40
TNT mixed with aluminum, see Tritonal												
TNT, *see* Trinitrotoluene, *etc*												
Toluene	3	UN1294	II	3	IB2, T4, TP1	150	202	242	5 L	60 L	B	
+ Toluene diisocyanate	6.1	UN2078	II	6.1	IB2, T7, TP2, TP13	153	202	243	5 L	60 L	D	25, 40
Toluene sulfonic acid, see Alkyl, *or* Aryl sulfonic acid *etc*												
+ Toluidines, liquid	6.1	UN1708	II	6.1	IB2, T7, TP2	153	202	243	5 L	60 L	A	

§ 172.101 HAZARDOUS MATERIALS TABLE—Continued

Symbols	Hazardous materials descriptions and proper shipping names	Hazard class or Division	Identification Numbers	PG	Label Codes	Special provisions (§172.102)	(8) Packaging (§173.***) Exceptions	Non-bulk	Bulk	(9) Quantity limitations Passenger aircraft/rail	Cargo aircraft only	(10) Vessel stowage Location	Other
(1)	(2)	(3)	(4)	(5)	(6)	(7)	(8A)	(8B)	(8C)	(9A)	(9B)	(10A)	(10B)
	Toluidines, solid	6.1	UN3451	II	6.1	IB8, IP2, IP4, T3, TP33	153	212	242	25 kg	100 kg	A	
	2,4-Toluylenediamine, solid *or* 2,4-Toluenediamine, solid	6.1	UN1709	III	6.1	IB8, IP3, T1, TP33	153	213	240	100 kg	200 kg	A	
	2,4-Toluylenediamine solution *or* 2,4-Toluenediamine solution	6.1	UN3418	III	6.1	IB3, T4, TP1	153	203	241	60 L	220 L	A	
	Torpedoes, liquid fueled, *with inert head*	1.3J	UN0450	II	1.3J			62	None	Forbidden	Forbidden	04	23E
	Torpedoes, liquid fueled, *with or without bursting charge*	1.1J	UN0449	II	1.1J			62	None	Forbidden	Forbidden	04	23E
	Torpedoes *with bursting charge*	1.1E	UN0329	II	1.1E			62	None	Forbidden	Forbidden	03	
	Torpedoes *with bursting charge*	1.1F	UN0330	II	1.1F			62	None	Forbidden	Forbidden	08	
	Torpedoes *with bursting charge*	1.1D	UN0451	II	1.1D			62	None	Forbidden	Forbidden	03	
G	Toxic by inhalation liquid, n.o.s. *with an inhalation toxicity lower than or equal to 200 ml/m3 and saturated vapor concentration greater than or equal to 500 LC50.*	6.1	UN3381	I	6.1	1, B9, B14, B30, B72, T22, TP2, TP13, TP27, TP38, TP44	None	226	244	Forbidden	Forbidden	D	40
G	Toxic by inhalation liquid, n.o.s. *with an inhalation toxicity toxicity lower than or equal to 1000 ml/m3 and saturated vapor concentration greater than or equal to 10 LC50.*	6.1	UN3382	I	6.1	2, B9, B14, B32, B74, T20, TP2, TP13, TP27, TP38, TP4527, TP38, TP4513	None	227	244	Forbidden	Forbidden	D	40
G	Toxic by inhalation liquid, flammable, n.o.s. *with an inhalation toxicity lower than or equal to 200 ml/m3 and saturated vapor concentration greater than or equal to 500 LC50.*	6.1	UN3383	I	6.1, 3	1, B9, B14, B30, B72, T22, TP2, TP13, TP27, TP38, TP44	None	226	244	Forbidden	Forbidden	D	40
G	Toxic by inhalation liquid, flammable, n.o.s. *with an inhalation toxicity lower than or equal to 1000 ml/m3 and saturated vapor concentration greater than or equal to 10 LC50.*	6.1	UN3384	I	6.1, 3	2, B9, B14, B32, B74, T20, TP2, TP13, TP27, TP38, TP45	None	227	244	Forbidden	Forbidden	D	40
G	Toxic by inhalation liquid, water-reactive, n.o.s. *with an inhalation toxicity lower than or equal to 200 ml/m3 and saturated vapor concentration greater than or equal to 500 LC50.*	6.1	UN3385	I	6.1, 4.3.	1, B9, B14, B30, B72, T22, TP2, TP13, TP38, TP44	None	226	244	Forbidden	Forbidden	D	40
G	Toxic by inhalation liquid, water-reactive, n.o.s. *with an inhalation toxicity lower than or equal to 1000 ml/m3 and saturated vapor concentration greater than or equal to 10 LC50.*	6.1	UN3386	I	6.1, 4.3.	2, B9, B14, B32, B74, T20, TP2, TP13, TP38, TP44	None	227	244	Forbidden	Forbidden	D	40
G	Toxic by inhalation liquid, oxidizing, n.o.s. *with an inhalation toxicity lower than or equal to 200 ml/m3 and saturated vapor concentration greater than or equal to 500 LC50.*	6.1	UN3387	I	6.1, 5.1.	1, B9, B14, B30, B72, T22, TP2, TP13, TP38, TP44	None	226	244	Forbidden	Forbidden	D	40
G	Toxic by inhalation liquid, oxidizing, n.o.s. *with an inhalation toxicity lower than or equal to 1000 ml/m3 and saturated vapor concentration greater than or equal to 10 LC50.*	6.1	UN3388	I	6.1, 5.1.	2, B9, B14, B32, T20, TP2, TP13, TP38, TP44	None	227	244	Forbidden	Forbidden	D	40
G	Toxic by inhalation liquid, corrosive, n.o.s. *with an inhalation toxicity lower than or equal to 200 ml/m3 and saturated vapor concentration greater than or equal to 500 LC50.*	6.1	UN3389	I	6.1, 8	1, B9, B14, B30, B72, T22, TP2, TP13, TP27, TP38, TP44	None	226	244	Forbidden	Forbidden	D	40
G	Toxic by inhalation liquid, corrosive, n.o.s. *with an inhalation toxicity lower than or equal to 1000 ml/m3 and saturated vapor concentration greater than or equal to 10 LC50.*	6.1	UN3390	I	6.1, 8	2, B9, B14, B32, B74, T20, TP2, TP13, TP27, TP38, TP45	None	227	244	Forbidden	Forbidden	D	40
G	Toxic liquid, corrosive, inorganic, n.o.s.	6.1	UN3289	I	6.1, 8	T14, TP2, TP13, TP27	None	201	243	0.5 L	2.5 L	A	
				II	6.1, 8	IB2, T11, TP2, TP27	153	202	243	1 L	30 L	A	
G	Toxic liquid, inorganic, n.o.s.	6.1	UN3287	I	6.1	T14, TP2, TP13, TP27	None	201	243	1 L	30 L	A	
				II	6.1	IB2, T11, TP2, TP27	153	202	243	5 L	60 L	A	
				III	6.1	IB3, T7, TP1, TP28	153	203	241	60 L	220 L	A	
G	Toxic liquids, corrosive, organic, n.o.s.	6.1	UN2927	I	6.1, 8	T14, TP2, TP13, TP27	None	201	243	0.5 L	2.5 L	B	40
				II	6.1, 8	IB2, T11, TP2, TP27	153	202	243	1 L	30 L	B	40

G	Toxic liquids, flammable, organic, n.o.s.	6.1	UN2929	I	6.1, 3	T14, TP2, TP13, TP27	None	201	243	1 L	30 L	B	40
				II	6.1, 3	IB2, T11, TP2, TP13, TP27	153	202	243	5 L	60 L	B	40
G	Toxic, liquids, organic, n.o.s.	6.1	UN2810	I	6.1	T14, TP2, TP13, TP27	None	201	243	1 L	30 L	B	40
				II	6.1	IB2, T11, TP2, TP13, TP27	153	202	243	5 L	60 L	B	40
				III	6.1	IB3, T7, TP1, TP28	153	203	241	60 L	220 L	A	40
G	Toxic liquids, oxidizing, n.o.s.	6.1	UN3122	I	6.1, 5.1.	A4	None	201	243	Forbidden	2.5 L	C	
				II	6.1, 5.1.	IB2	153	202	243	1 L	5 L	C	
G	Toxic liquids, water-reactive, n.o.s.	6.1	UN3123	I	6.1, 4.3.	A4	None	201	243	Forbidden	1 L	E	40
				II	6.1, 4.3.	IB2	None	202	243	1 L	5 L	E	40
G	Toxic solid, corrosive, inorganic, n.o.s.	6.1	UN3290	I	6.1, 8	IB7, T6, TP33	None	211	242	1 kg	25 kg	A	
				II	6.1, 8	IB6, IP2, T3, TP33	153	212	242	15 kg	50 kg	A	
G	Toxic solid, inorganic, n.o.s.	6.1	UN3288	I	6.1	IB7, T6, TP33	None	211	242	5 kg	50 kg	A	
				II	6.1	IB8, IP2, IP4, T3, TP33	153	212	242	25 kg	100 kg	A	
				III	6.1	IB8, IP3, T1, TP33	153	213	240	100 kg	200 kg	A	
G	Toxic solids, corrosive, organic, n.o.s.	6.1	UN2928	I	6.1, 8	IB7, T6, TP33	None	211	242	1 kg	25 kg	B	40
				II	6.1, 8	IB6, IP2, T3, TP33	153	212	242	15 kg	50 kg	B	40
G	Toxic solids, flammable, organic, n.o.s.	6.1	UN2930	I	6.1, 4.1.	IB6, T6, TP33	None	211	242	1 kg	15 kg	B	
				II	6.1, 4.1.	IB8, IP2, IP4, T3, TP33	153	212	242	15 kg	50 kg	B	
G	Toxic solids, organic, n.o.s.	6.1	UN2811	I	6.1	IB7, T6, TP33	None	211	242	5 kg	50 kg	B	
				II	6.1	IB8, IP2, IP4, T3, TP33	153	212	242	25 kg	100 kg	B	
				III	6.1	IB8, IP3, T1, TP33	153	213	240	100 kg	200 kg	A	
G	Toxic solids, oxidizing, n.o.s.	6.1	UN3086	I	6.1, 5.1.	T6, TP33	None	211	242	1 kg	15 kg	C	
				II	6.1, 5.1.	IB6, IP2, T3, TP33	153	212	242	15 kg	50 kg	C	
G	Toxic solids, self-heating, n.o.s.	6.1	UN3124	I	6.1, 4.2.	A5, T6, TP33	None	211	242	5 kg	15 kg	D	40
				II	6.1, 4.2.	IB6, IP2, T3, TP33	None	212	242	15 kg	50 kg	D	40
G	Toxic solids, water-reactive, n.o.s.	6.1	UN3125	I	6.1, 4.3.	A5, T6, TP33	None	211	242	5 kg	15 kg	D	40
				II	6.1, 4.3.	IB6, IP2, T3, TP33	153	212	242	15 kg	50 kg	D	40
G	Toxins, extracted from living sources, liquid, n.o.s.	6.1	UN3172	I	6.1	141	None	201	243	1 L	30 L	B	40
				II	6.1	141, IB2	None	202	243	5 L	60 L	B	40
				III	6.1	141, IB3	153	203	241	60 L	220 L	B	40
	Toxins, extracted from living sources, solid, n.o.s.	6.1	UN3462	I	6.1	141, IB7, IP1, T6, TP33	None	211	243	5 kg	50 kg	B	
				II	6.1	141, IB8, IP2, IP4, T3, TP33	None	212	243	25 kg	100 kg	B	
				III	6.1	141, IB8, IP3, T1, TP33	153	213	241	100 kg	200 kg	A	
D	Toy Caps	1.4S	NA0337	II	1.4S		None	62	None	25 kg	100 kg	05	
	Tracers for ammunition	1.3G	UN0212	II	1.3G		None	62	None	Forbidden	Forbidden	07	
	Tracers for ammunition	1.4G	UN0306	II	1.4G		None	62	None	Forbidden	75 kg	06	
	Tractors, see Vehicle, *etc*												
	Tri-(b-nitroxyethyl) ammonium nitrate	Forbidden											
	Triallyl borate	6.1	UN2609	III	6.1	IB3	153	203	241	60 L	220 L	A	13
	Triallylamine	3	UN2610	III	3, 8	B1, IB3, T4, TP1	None	203	242	5 L	60 L	A	40
	Triazine pesticides, liquid, flammable, toxic, *flash point less than 23 degrees C*	3	UN2764	I	3, 6.1	T14, TP2, TP13, TP27	None	201	243	Forbidden	30 L	B	40
				II	3, 6.1	IB2, T11, TP2, TP13, TP27	150	202	243	1 L	60 L	B	40
	Triazine pesticides, liquid, toxic	6.1	UN2998	I	6.1	T14, TP2, TP13, TP27	None	201	243	1 L	30 L	B	40
				II	6.1	IB2, T11, TP2, TP13, TP27	153	202	243	5 L	60 L	B	40

§ 172.101 HAZARDOUS MATERIALS TABLE—Continued

Symbols	Hazardous materials descriptions and proper shipping names	Hazard class or Division	Identification Numbers	PG	Label Codes	Special provisions (§172.102)	(8) Packaging (§173.***) Exceptions	Non-bulk	Bulk	(9) Quantity limitations Passenger aircraft/rail	Cargo aircraft only	(10) Vessel stowage Location	Other
(1)	(2)	(3)	(4)	(5)	(6)	(7)	(8A)	(8B)	(8C)	(9A)	(9B)	(10A)	(10B)
	.....	.....		III	6.1	IB3, T7, TP2, TP28	153	203	241	60 L	220 L	A	40
	Triazine pesticides, liquid, toxic, flammable, *flash point not less than 23 degrees C*	6.1	UN2997	I	6.1, 3	T14, TP2, TP13, TP27	None	201	243	1 L	30 L	B	40
	.....	.....		II	6.1, 3	IB2, T11, TP2, TP13, TP27	153	202	243	5 L	60 L	B	40
	.....	.....		III	6.1, 3	IB3, T7, TP2, TP28	153	203	242	60 L	220 L	A	40
	Triazine pesticides, solid, toxic	6.1	UN2763	I	6.1	IB7, IP1, T6, TP33	None	211	242	5 kg	50 kg	A	40
	.....	.....		II	6.1	IB8, IP2, IP4, T3, TP33	153	212	242	25 kg	100 kg	A	40
	.....	.....		III	6.1	IB8, IP3, T1, TP33	153	213	240	100 kg	200 kg	A	40
	Tributylamine	6.1	UN2542	II	6.1	IB2, T7, TP2	153	202	243	5 L	60 L	A	.....
	Tributylphosphane	4.2	UN3254	I	4.2	T21, TP7, TP33	None	211	242	Forbidden	Forbidden	D	136
	Trichloro-s-triazinetrione dry, with more than 39 percent available chlorine, see Trichloroisocyanuric acid, dry.	.....			.....		.....	.....	.....	.....	.....		.....
	Trichloroacetic acid	8	UN1839	II	8	A7, IB8, IP2, IP4, N34, T3, TP33	154	212	240	15 kg	50 kg	A	.....
	Trichloroacetic acid, solution	8	UN2564	II	8	A3, A6, A7, B2, IB2, N34, T7, TP2	154	202	242	1 L	30 L	B	.....
	.....	.....		III	8	A3, A6, A7, IB3, N34, T4, TP1	154	203	241	5 L	60 L	B	8
+	Trichloroacetyl chloride	8	UN2442	II	8, 6.1	2, B9, B14, B32, B74, N34, T20, TP2, TP38, TP45	None	227	244	Forbidden	Forbidden	D	40
	Trichlorobenzenes, liquid	6.1	UN2321	III	6.1	IB3, T4, TP1	153	203	241	60 L	220 L	A	.....
	Trichlorobutene	6.1	UN2322	II	6.1	IB2, T7, TP2	153	202	243	5 L	60 L	A	25, 40
	1,1,1-Trichloroethane	6.1	UN2831	III	6.1	IB3, N36, T4, TP1	153	203	241	60 L	220 L	A	40
	Trichloroethylene	6.1	UN1710	III	6.1	IB3, N36, T4, TP1	153	203	241	60 L	220 L	A	40
	Trichloroisocyanuric acid, dry	5.1	UN2468	II	5.1	IB8, IP4, T3, TP33	152	212	240	5 kg	25 kg	A	13
	Trichloromethyl perchlorate	Forbidden			.....		.....	.....	.....	.....	.....		.....
	Trichlorosilane	4.3	UN1295	I	4.3, 3, 8.	N34, T14, TP2, TP7, TP13	None	201	244	Forbidden	Forbidden	D	21, 28, 40, 49, 100
	Tricresyl phosphate *with more than 3 percent ortho isomer*	6.1	UN2574	II	6.1	A3, IB2, N33, N34, T7, TP2	153	202	243	5 L	60 L	A	.....
	Triethyl phosphite	3	UN2323	III	3	B1, IB3, T2, TP1	150	203	242	60 L	220 L	A	.....
	Triethylamine	3	UN1296	II	3, 8	IB2, T7, TP1	150	202	243	1 L	5 L	B	40
	Triethylenetetramine	8	UN2259	II	8	B2, IB2, T7, TP2	154	202	242	1 L	30 L	B	40, 52
	Trifluoroacetic acid	8	UN2699	I	8	A3, A6, A7, B4, N3, N34, N36, T10, TP2, TP12	None	201	243	0.5 L	2.5 L	B	12, 40
	Trifluoroacetyl chloride	2.3	UN3057	.....	2.3, 8	2, B7, B9, B14, T50, TP21	None	304	314, 315.	Forbidden	Forbidden	D	40
	Trifluorochloroethylene, stabilized	2.3	UN1082	.....	2.3, 2.1.	3, B14, T50	None	304	314, 315.	Forbidden	Forbidden	D	40
	Trifluoromethane *or* Refrigerant gas R 23	2.2	UN1984	.....	2.2		306	304	314, 315.	75 kg	150 kg	A	.....
	1,1,1-Trifluoroethane *or* Refrigerant gas, R 143a	2.1	UN2035	.....	2.1	T50	306	304	314, 315.	Forbidden	150 kg	B	40
	Trifluoromethane, refrigerated liquid	2.2	UN3136	.....	2.2	T75, TP5	306	None	314, 315.	50 kg	500 kg	D	.....
	2-Trifluoromethylaniline	6.1	UN2942	III	6.1	IB3	153	203	241	60 L	220 L	A	.....
	3-Trifluoromethylaniline	6.1	UN2948	II	6.1	IB2, T7, TP2	153	202	243	5 L	60 L	A	40
	Triformoxime trinitrate	Forbidden			.....		.....	.....	.....	.....	.....		.....
	Triisobutylene	3	UN2324	III	3	B1, IB3, T4, TP1	150	203	242	60 L	220 L	A	.....
	Triisopropyl borate	3	UN2616	II	3	IB2, T4, TP1	150	202	242	5 L	60 L	A	.....
	.....	.....		III	3	B1, IB3, T2, TP1	150	203	242	60 L	220 L	A	.....

D	Trimethoxysilane	6.1	NA9269	I	6.1, 3	2, B9, B14, B32, B74, T20, TP4, TP12, TP13, TP38, TP45	None	227	244	Forbidden	Forbidden	E	40
	Trimethyl borate	3	UN2416	II	3	IB2, T7, TP1	150	202	242	5 L	60 L	B	
	Trimethyl phosphite	3	UN2329	III	3	B1, IB3, T2, TP1	150	203	242	60 L	220 L	A	
	1,3,5-Trimethyl-2,4,6-trinitrobenzene	Forbidden											
	Trimethylacetyl chloride	6.1	UN2438	I	6.1, 8, 3.	2, B3, B9, B14, B32, B74, N34, T20, TP2, TP13, TP38, TP45	None	227	244	Forbidden	Forbidden	D	25, 40
	Trimethylamine, anhydrous	2.1	UN1083		2.1	T50	306	304	314, 315.	Forbidden	150 kg	B	40
	Trimethylamine, aqueous solutions *with not more than 50 percent trimethylamine by mass*	3	UN1297	I	3, 8	T11, TP1	None	201	243	0.5 L	2.5 L	D	40, 135
				II	3, 8	B1, IB2, T7, TP1	150	202	243	1 L	5 L	B	40, 41
				III	3, 8	B1, IB3, T7, TP1	150	203	242	5 L	60 L	A	40, 41
	1,3,5-Trimethylbenzene	3	UN2325	III	3	B1, IB3, T2, TP1	150	203	242	60 L	220 L	A	
	Trimethylchlorosilane	3	UN1298	II	3, 8	A3, A7, B77, IB2, N34, T7, TP2, TP13	150	202	243	1 L	5 L	E	40
	Trimethylcyclohexylamine	8	UN2326	III	8	IB3, T4, TP1	154	203	241	5 L	60 L	A	
	Trimethylene glycol diperchlorate	Forbidden											
	Trimethylhexamethylene diisocyanate	6.1	UN2328	III	6.1	IB3, T4, TP2, TP13	153	203	241	60 L	220 L	B	
	Trimethylhexamethylenediamines	8	UN2327	III	8	IB3, T4, TP1	154	203	241	5 L	60 L	A	
	Trimethylol nitromethane trinitrate	Forbidden											
	Trinitro-meta-cresol	1.1D	UN0216	II	1.1D		None	62	None	Forbidden	Forbidden	10	5E
	2,4,6-Trinitro-1,3-diazobenzene	Forbidden											
	2,4,6-Trinitro-1,3,5-triazido benzene (dry)	Forbidden											
	Trinitroacetic acid	Forbidden											
	Trinitroacetonitrile	Forbidden											
	Trinitroamine cobalt	Forbidden											
	Trinitroaniline *or* Picramide	1.1D	UN0153	II	1.1D		None	62	None	Forbidden	Forbidden	10	
	Trinitroanisole	1.1D	UN0213	II	1.1D		None	62	None	Forbidden	Forbidden	10	
	Trinitrobenzene (picryl chloride), wetted, *with not less than 10% water by mass*	4.1	UN3365	I	4.1	162, A8, A19, N41, N84	None	211	None	0.5 kg	0.5 kg	E	36
	Trinitrobenzene, wetted, *with not less than 10% water, by mass*	4.1	UN3367	I	4.1	162, A8, A19, N41, N84	None	211	None	0.5 kg	0.5 kg	E	36
	Trinitrobenzene, *dry or wetted with less than 30 percent water, by mass*	1.1D	UN0214	II	1.1D		None	62	None	Forbidden	Forbidden	10	
	Trinitrobenzene, wetted *with not less than 30 percent water, by mass*	4.1	UN1354	I	4.1	23, A2, A8, A19, N41	None	211	None	0.5 kg	0.5 kg	E	28
	Trinitrobenzenesulfonic acid	1.1D	UN0386	II	1.1D		None	62	None	Forbidden	Forbidden	10	5E
	Trinitrobenzoic acid, *dry or wetted with less than 30 percent water, by mass*	1.1D	UN0215	II	1.1D		None	62	None	Forbidden	Forbidden	10	
	Trinitrobenzoic acid, wetted *with not less than 10% water by mass*	4.1	UN3368	I	4.1	162, A8, A19, N41, N84	None	211	None	0.5 kg	0.5 kg	E	36
	Trinitrobenzoic acid, wetted *with not less than 30 percent water, by mass*	4.1	UN1355	I	4.1	23, A2, A8, A19, N41	None	211	None	0.5 kg	0.5 kg	E	28
	Trinitrochlorobenzene *or* Picryl chloride	1.1D	UN0155	II	1.1D		None	62	None	Forbidden	Forbidden	10	
	Trinitroethanol	Forbidden											
	Trinitroethylnitrate	Forbidden											
	Trinitrofluorenone	1.1D	UN0387	II	1.1D		None	62	None	Forbidden	Forbidden	10	
	Trinitromethane	Forbidden											
	1,3,5-Trinitronaphthalene	Forbidden											
	Trinitronaphthalene	1.1D	UN0217	II	1.1D		None	62	None	Forbidden	Forbidden	10	
	Trinitrophenetole	1.1D	UN0218	II	1.1D		None	62	None	Forbidden	Forbidden	10	
	Trinitrophenol (picric acid), wetted, *with not less than 10 percent water by mass*	4.1	UN3364	I	4.1	162, A8, A19, N41, N84	None	211	None	0.5 kg	0.5 kg	E	36
	Trinitrophenol *or* Picric acid, *dry or wetted with less than 30 percent water, by mass*	1.1D	UN0154	II	1.1D		None	62	None	Forbidden	Forbidden	10	5E
	Trinitrophenol, wetted *with not less than 30 percent water, by mass*	4.1	UN1344	I	4.1	23, A8, A19, N41	None	211	None	1 kg	15 kg	E	28, 36
	2,4,6-Trinitrophenyl guanidine (dry)	Forbidden											
	2,4,6-Trinitrophenyl nitramine	Forbidden											
	2,4,6-Trinitrophenyl trimethylol methyl nitramine trinitrate (dry)	Forbidden											
	Trinitrophenylmethylnitramine *or* Tetryl	1.1D	UN0208	II	1.1D		None	62	None	Forbidden	Forbidden	10	
	Trinitroresorcinol *or* Styphnic acid, *dry or wetted with less than 20 percent water, or mixture of alcohol and water, by mass.*	1.1D	UN0219	II	1.1D		None	62	None	Forbidden	Forbidden	10	5E
	Trinitroresorcinol, wetted *or* Styphnic acid, wetted *with not less than 20 percent water, or mixture of alcohol and water by mass.*	1.1D	UN0394	II	1.1D		None	62	None	Forbidden	Forbidden	10	5E
	2,4,6-Trinitroso-3-methyl nitraminoanisole	Forbidden											
	Trinitrotetramine cobalt nitrate	Forbidden											
	Trinitrotoluene and Trinitrobenzene mixtures *or* TNT and trinitrobenzene mixtures *or* TNT and hexanitrostilbene mixtures *or* Trinitrotoluene and hexanitrostilnene mixtures.	1.1D	UN0388	II	1.1D		None	62	None	Forbidden	Forbidden	10	
	Trinitrotoluene mixtures containing Trinitrobenzene and Hexanitrostilbene *or* TNT mixtures containing trinitrobenzene and hexanitrostilbene.	1.1D	UN0389	II	1.1D		None	62	None	Forbidden	Forbidden	10	
	Trinitrotoluene *or* TNT, *dry or wetted with less than 30 percent water, by mass*	1.1D	UN0209	II	1.1D		None	62	None	Forbidden	Forbidden	10	
	Trinitrotoluene (TNT), wetted, *with not less than 10 percent water by mass*	4.1	UN3366	I	4.1	162, A8, A19, N41, N84	None	211	None	0.5 kg	0.5 kg	E	36

§ 172.101 HAZARDOUS MATERIALS TABLE—Continued

Symbols	Hazardous materials descriptions and proper shipping names	Hazard class or Division	Identification Numbers	PG	Label Codes	Special provisions (§172.102)	(8) Packaging (§173.***)			(9) Quantity limitations		(10) Vessel stowage	
							Exceptions	Non-bulk	Bulk	Passenger aircraft/rail	Cargo aircraft only	Location	Other
(1)	(2)	(3)	(4)	(5)	(6)	(7)	(8A)	(8B)	(8C)	(9A)	(9B)	(10A)	(10B)
	Trinitrotoluene, wetted *with not less than 30 percent water, by mass*	4.1	UN1356	I	4.1	23, A2, A8, A19, N41	None	211	None	0.5 kg	0.5 kg	E	28
	Tripropylamine	3	UN2260	III	3, 8	B1, IB3, T4, TP1	150	203	242	5 L	60 L	A	40
	Tripropylene	3	UN2057	II	3	IB2, T4, TP1	150	202	242	5 L	60 L	B	
				III	3	B1, IB3, T2, TP1	150	203	242	60 L	220 L	A	
	Tris-(1-aziridinyl)phosphine oxide, solution	6.1	UN2501	II	6.1	IB2, T7, TP2	153	202	243	5 L	60 L	A	
				III	6.1	IB3, T4, TP1	153	203	241	60 L	220 L	A	
	Tris, bis-bifluoroamino diethoxy propane (TVOPA)	Forbidden											
	Tritonal	1.1D	UN0390	II	1.1D		None	62	None	Forbidden	Forbidden	10	
	Tungsten hexafluoride	2.3	UN2196		2.3, 8	2	None	338	None	Forbidden	Forbidden	D	40
	Turpentine	3	UN1299	III	3	B1, IB3, T2, TP1	150	203	242	60 L	220 L	A	
	Turpentine substitute	3	UN1300	I	3	T11, TP1, TP8, TP27	None	201	243	1 L	30 L	B	
				II	3	IB2, T4, TP1	150	202	242	5 L	60 L	B	
				III	3	B1, IB3, T2, TP1	150	203	242	60 L	220 L	A	
	Undecane	3	UN2330	III	3	B1, IB3, T2, TP1	150	203	242	60 L	220 L	A	
	Urea hydrogen peroxide	5.1	UN1511	III	5.1, 8	A1, A7, A29, IB8, IP3, T1, TP33	152	213	240	25 kg	100 kg	A	13
	Urea nitrate, *dry or wetted with less than 20 percent water, by mass*	1.1D	UN0220	II	1.1D	119	None	62	None	Forbidden	Forbidden	10	
	Urea nitrate, wetted, *with not less than 10 percent water by mass*	4.1	UN3370	I	4.1	162, A8, A19, N41, N84	None	211	None	0.5 kg	0.5 kg	E	36
	Urea nitrate, wetted *with not less than 20 percent water, by mass*	4.1	UN1357	I	4.1	23, 39, A8, A19, N41	None	211	None	1 kg	15 kg	E	28, 36
	Urea peroxide, see Urea hydrogen peroxide												
	Valeraldehyde	3	UN2058	II	3	IB2, T4, TP1	150	202	242	5 L	60 L	B	
	Valeric acid, see Corrosive liquids, n.o.s.												
	Valeryl chloride	8	UN2502	II	8, 3	A3, A6, A7, B2, IB2, N34, T7, TP2	154	202	243	1 L	30 L	C	40
	Vanadium compound, n.o.s.	6.1	UN3285	I	6.1	IB7, IP1, T6, TP33	None	211	242	5 kg	50 kg	B	
				II	6.1	IB8, IP2, IP4, T3, TP33	153	212	242	25 kg	100 kg	B	
				III	6.1	IB8, IP3, T1, TP33	153	213	240	100 kg	200 kg	A	
	Vanadium oxytrichloride	8	UN2443	II	8	A3, A6, A7, B2, B16, IB2, N34, T7, TP2	154	202	242	Forbidden	30 L	C	40
	Vanadium pentoxide, *non-fused form*	6.1	UN2862	III	6.1	IB8, IP3, T1, TP33	153	213	240	100 kg	200 kg	A	40
	Vanadium tetrachloride	8	UN2444	I	8	A3, A6, A7, B4, N34, T10, TP2	None	201	243	Forbidden	2.5 L	C	40
	Vanadium trichloride	8	UN2475	III	8	IB8, IP3, T1, TP33	154	213	240	25 kg	100 kg	A	40
	Vanadyl sulfate	6.1	UN2931	II	6.1	IB8, IP2, IP4, T3, TP33	153	212	242	25 kg	100 kg	A	
	Vehicle, flammable gas powered	9	UN3166		9	135, 157	220	220	220	Forbidden	No limit	A	
	Vehicle, flammable liquid powered	9	UN3166		9	135, 157	220	220	220	No limit	No limit	A	
	Very signal cartridge, see Cartridges, signal												
	Vinyl acetate, stabilized	3	UN1301	II	3	IB2, T4, TP1	150	202	242	5 L	60 L	B	
	Vinyl bromide, stabilized	2.1	UN1085		2.1	T50	306	304	314, 315.	Forbidden	150 kg	B	40
	Vinyl butyrate, stabilized	3	UN2838	II	3	IB2, T4, TP1	150	202	242	5 L	60 L	B	
	Vinyl chloride, stabilized	2.1	UN1086		2.1	21, B44, T50	306	304	314, 315.	Forbidden	150 kg	B	40
	Vinyl chloroacetate	6.1	UN2589	II	6.1, 3	IB2, T7, TP2	153	202	243	5 L	60 L	A	
	Vinyl ethyl ether, stabilized	3	UN1302	I	3	A3, T11, TP2	None	201	243	1 L	30 L	D	
	Vinyl fluoride, stabilized	2.1	UN1860		2.1		306	304	314, 315.	Forbidden	150 kg	E	40
	Vinyl isobutyl ether, stabilized	3	UN1304	II	3	IB2, T4, TP1	150	202	242	5 L	60 L	B	
	Vinyl methyl ether, stabilized	2.1	UN1087		2.1	B44, T50	306	304	314, 315.	Forbidden	150 kg	B	40
	Vinyl nitrate polymer	Forbidden											
	Vinylidene chloride, stabilized	3	UN1303	I	3	T12, TP2, TP7	150	201	243	1 L	30 L	E	40

	Vinylpyridines, stabilized	6.1	UN3073	II	6.1, 3, 8.	IB1, T7, TP2, TP13	153	202	243	1 L	30 L	B	40
	Vinyltoluenes, stabilized	3	UN2618	III	3	B1, IB3, T2, TP1	150	203	242	60 L	220 L	A	
	Vinyltrichlorosilane, stabilized	3	UN1305	I	3, 8	A3, A7, B6, N34, T11, TP2, TP13	None	201	243	Forbidden	2.5 L	B	40
	Warheads, rocket *with burster or expelling charge*	1.4D	UN0370	II	1.4D		None	62	None	Forbidden	75 kg	02	
	Warheads, rocket *with burster or expelling charge*	1.4F	UN0371	II	1.4F		None	62	None	Forbidden	Forbidden	08	
	Warheads, rocket *with bursting charge*	1.1D	UN0286	II	1.1D		None	62	None	Forbidden	Forbidden	03	
	Warheads, rocket *with bursting charge*	1.2D	UN0287	II	1.2D		None	62	None	Forbidden	Forbidden	03	
	Warheads, rocket *with bursting charge*	1.1F	UN0369	II	1.1F		None	62	None	Forbidden	Forbidden	08	
	Warheads, torpedo *with bursting charge*	1.1D	UN0221	II	1.1D		None	62	None	Forbidden	Forbidden	03	
G	Water-reactive liquid, corrosive, n.o.s.	4.3	UN3129	I	4.3, 8		None	201	243	Forbidden	1 L	D	
				II	4.3, 8	IB1	None	202	243	1 L	5 L	E	85
				III	4.3, 8	IB2	None	203	242	5 L	60 L	E	
G	Water-reactive liquid, n.o.s.	4.3	UN3148	I	4.3		None	201	244	Forbidden	1 L	E	40
				II	4.3	IB1	None	202	243	1 L	5 L	E	40
				III	4.3	IB2	None	203	242	5 L	60 L	E	40
G	Water-reactive liquid, toxic, n.o.s.	4.3	UN3130	I	4.3, 6.1.	A4	None	201	243	Forbidden	1 L	D	
				II	4.3, 6.1.	IB1	None	202	243	1 L	5 L	E	85
				III	4.3, 6.1.	IB2	None	203	242	5 L	60 L	E	85
G	Water-reactive solid, corrosive, n.o.s.	4.3	UN3131	I	4.3, 8	IB4, IP1, N40	None	211	242	Forbidden	15 kg	D	
				II	4.3, 8	IB6, IP2, T3, TP33	151	212	242	15 kg	50 kg	E	85
				III	4.3, 8	IB8, IP4, T1, TP33	151	213	241	25 kg	100 kg	E	85
G	Water-reactive solid, flammable, n.o.s.	4.3	UN3132	I	4.3, 4.1.	IB4, N40	None	211	242	Forbidden	15 kg	D	
				II	4.3, 4.1.	IB4, T3, TP33	151	212	242	15 kg	50 kg	E	
				III	4.3, 4.1.	IB6, T1, TP33	151	213	241	25 kg	100 kg	E	
G	Water-reactive solid, n.o.s.	4.3	UN2813	I	4.3	IB4, N40	None	211	242	Forbidden	15 kg	E	40
				II	4.3	IB7, IP2, T3, TP33	151	212	242	15 kg	50 kg	E	40
				III	4.3	IB8, IP4, T1, TP33	151	213	241	25 kg	100 kg	E	40
G	Water-reactive, solid, oxidizing, n.o.s.	4.3	UN3133	II	4.3, 5.1.		None	214	214	Forbidden	Forbidden	E	40
				III	4.3, 5.1.		None	214	214	Forbidden	Forbidden	E	40
G	Water-reactive solid, self-heating, n.o.s.	4.3	UN3135	I	4.3, 4.2.	N40	None	211	242	Forbidden	15 kg	E	
				II	4.3, 4.2.	IB5, IP2, T3, TP33	None	212	242	15 kg	50 kg	E	
				III	4.3, 4.2.	IB8, IP4, T1, TP33	None	213	241	25 kg	100 kg	E	
G	Water-reactive solid, toxic, n.o.s.	4.3	UN3134	I	4.3, 6.1.	A8, IB4, IP1, N40	None	211	242	Forbidden	15 kg	D	
				II	4.3, 6.1.	IB5, IP2, T3, TP33	151	212	242	15 kg	50 kg	E	85
				III	4.3, 6.1.	IB8, IP4, T1, TP33	151	213	241	25 kg	100 kg	E	85
	Wheel chair, electric, see Battery powered vehicle *or* Battery powered equipment												
	White acid, see Hydrofluoric acid												
I	White asbestos *(chrysotile, actinolite, anthophyllite, tremolite)*	9	UN2590	III	9	156, IB8, IP2, IP3, T1, TP33	155	216	240	200 kg	200 kg	A	34, 40
	Wood preservatives, liquid	3	UN1306	II	3	149, IB2, T4, TP1, TP8	150	202	242	5 L	60 L	B	
				III	3	B1, IB3, T2, TP1	150	203	242	60 L	220 L	A	40
A I W	Wool waste, wet	4.2	UN1387	III	4.2		151	213	240	Forbidden	Forbidden	A	
	Xanthates	4.2	UN3342	II	4.2	IB6, IP2, T3, TP33	None	212	241	15 kg	50 kg	D	40
				III	4.2	IB8, IP3, T1, TP33	None	213	241	25 kg	100 kg	D	40
	Xenon	2.2	UN2036		2.2		306	302	None	75 kg	150 kg	A	
	Xenon, refrigerated liquid *(cryogenic liquids)*	2.2	UN2591		2.2	T75, TP5	320	None	None	50 kg	500 kg	B	
	Xylenes	3	UN1307	II	3	IB2, T4, TP1	150	202	242	5 L	60 L	B	
				III	3	B1, IB3, T2, TP1	150	203	242	60 L	220 L	A	
	Xylenols, solid	6.1	UN2261	II	6.1	IB8, IP2, IP4, T3, TP33	153	212	242	25 kg	100 kg	A	
	Xylenols, liquid	6.1	UN3430	II	6.1	IB2, T7, TP2	153	202	243	5 L	60 L	A	
	Xylidines, liquid	6.1	UN1711	II	6.1	IB2, T7, TP2	153	202	243	5 L	60 L	A	

§ 172.101 HAZARDOUS MATERIALS TABLE—Continued

Symbols	Hazardous materials descriptions and proper shipping names	Hazard class or Division	Identification Numbers	PG	Label Codes	Special provisions (§172.102)	(8) Packaging (§173.***)			(9) Quantity limitations		(10) Vessel stowage	
							Exceptions	Non-bulk	Bulk	Passenger aircraft/rail	Cargo aircraft only	Location	Other
(1)	(2)	(3)	(4)	(5)	(6)	(7)	(8A)	(8B)	(8C)	(9A)	(9B)	(10A)	(10B)
	Xylidines, solid	6.1	UN3452	II	6.1	IB8, IP2, IP4, T3, TP33	153	212	242	25 kg	100 kg	A	
	Xylyl bromide, liquid	6.1	UN1701	II	6.1	A3, A6, A7, IB2, N33, T7, TP2, TP13	None	340	None	Forbidden	60 L	D	40
	Xylyl bromide, solid	6.1	UN3417	II	6.1	A3, A6, A7, IB8, IP2, IP4, N33, T3, TP33	None	340	None	25 kg	100 kg	B	40
	p-Xylyl diazide	Forbidden											
	Zinc ammonium nitrite	5.1	UN1512	II	5.1	IB8, IP4, T3, TP33	None	212	242	5 kg	25 kg	E	
	Zinc arsenate *or* Zinc arsenite *or* Zinc arsenate and zinc arsenite mixtures	6.1	UN1712	II	6.1	IB8, IP2, IP4, T3, TP33	153	212	242	25 kg	100 kg	A	
	Zinc ashes	4.3	UN1435	III	4.3	A1, A19, IB8, IP4, T1, TP33	151	213	241	25 kg	100 kg	A	
	Zinc bisulfite solution, see Bisulfites, aqueous solutions, n.o.s.												
	Zinc bromate	5.1	UN2469	III	5.1	A1, A29, IB8, IP3, T1, TP33	152	213	240	25 kg	100 kg	A	56, 58
	Zinc chlorate	5.1	UN1513	II	5.1	A9, IB8, IP2, IP4, N34, T3, TP33	152	212	242	5 kg	25 kg	A	56, 58
	Zinc chloride, anhydrous	8	UN2331	III	8	IB8, IP3, T1, TP33	None	213	240	25 kg	100 kg	A	
	Zinc chloride, solution	8	UN1840	III	8	IB3, T4, TP1	154	203	241	5 L	60 L	A	
	Zinc cyanide	6.1	UN1713	I	6.1	IB7, IP1, T6, TP33	None	211	242	5 kg	50 kg	A	52
	Zinc dithionite *or* Zinc hydrosulfite	9	UN1931	III	None	IB8, IP3, T1, TP33	155	204	240	100 kg	200 kg	A	49
	Zinc ethyl, see Diethylzinc												
	Zinc fluorosilicate	6.1	UN2855	III	6.1	IB8, IP3, T1, TP33	153	213	240	100 kg	200 kg	A	52
	Zinc hydrosulfite, *see* Zinc dithionite												
	Zinc muriate solution, see Zinc chloride, solution												
	Zinc nitrate	5.1	UN1514	II	5.1	IB8, IP4, T3, TP33	152	212	240	5 kg	25 kg	A	
	Zinc permanganate	5.1	UN1515	II	5.1	IB6, IP2, T3, TP33	152	212	242	5 kg	25 kg	D	56, 58, 138
	Zinc peroxide	5.1	UN1516	II	5.1	IB6, IP2, T3, TP33	152	212	242	5 kg	25 kg	A	13, 52, 66, 75
	Zinc phosphide	4.3	UN1714	I	4.3, 6.1.	A19, N40	None	211	None	Forbidden	15 kg	E	40, 52, 85
	Zinc powder *or* Zinc dust	4.3	UN1436	I	4.3, 4.2.	A19, IB4, IP1, N40	None	211	242	Forbidden	15 kg	A	52, 53
				II	4.3, 4.2.	A19, IB7, IP2, T3, TP33	None	212	242	15 kg	50 kg	A	52, 53
				III	4.3, 4.2.	IB8, IP4, T1, TP33	None	213	242	25 kg	100 kg	A	52, 53
	Zinc resinate	4.1	UN2714	III	4.1	A1, IB6, T1, TP33	151	213	240	25 kg	100 kg	A	
	Zinc selenate, see Selenates *or* Selenites												
	Zinc selenite, see Selenates *or* Selenites												
	Zinc silicofluoride, see Zinc fluorosilicate												
	Zirconium, dry, *coiled wire, finished metal sheets, strip (thinner than 254 microns but not thinner than 18 microns).*	4.1	UN2858	III	4.1	A1	151	213	240	25 kg	100 kg	A	
	Zirconium, dry, *finished sheets, strip or coiled wire*	4.2	UN2009	III	4.2	A1, A19	None	213	240	25 kg	100 kg	D	
	Zirconium hydride	4.1	UN1437	II	4.1	A19, A20, IB4, N34, T3, TP33	None	212	240	15 kg	50 kg	E	
	Zirconium nitrate	5.1	UN2728	III	5.1	A1, A29, IB8, IP3, T1, TP33	152	213	240	25 kg	100 kg	A	
	Zirconium picramate, *dry or wetted with less than 20 percent water, by mass*	1.3C	UN0236	II	1.3C		None	62	None	Forbidden	Forbidden	10	5E
	Zirconium picramate, wetted *with not less than 20 percent water, by mass*	4.1	UN1517	I	4.1	23, N41	None	211	None	1 kg	15 kg	D	28, 36
	Zirconium powder, dry	4.2	UN2008	I	4.2	T21, TP7, TP33	None	211	242	Forbidden	Forbidden	D	
				II	4.2	A19, A20, IB6, IP2, N5, N34, T3, TP33	None	212	241	15 kg	50 kg	D	

.....	.....		III	4.2	IB8, IP3, T1, TP33	None	213	241	25 kg	100 kg	D	.....
Zirconium powder, wetted *with not less than 25 percent water (a visible excess of water must be present) (a) mechanically produced, particle size less than 53 microns; (b) chemically produced, particle size less than 840 microns.*	4.1	UN1358	II	4.1	A19, A20, IB6, IP2, N34, T3, TP33	None	212	241	15 kg	50 kg	E	74
Zirconium scrap	4.2	UN1932	III	4.2	IB8, IP3, N34, T1, TP33	None	213	240	Forbidden	Forbidden	D	.....
Zirconium suspended in a liquid	3	UN1308	I	3		None	201	243	Forbidden	Forbidden	B	.....
.....	.....		II	3	IB2	None	202	242	5 L	60 L	B	.....
.....	.....		III	3	B1, IB2	150	203	242	60 L	220 L	B	.....
Zirconium tetrachloride	8	UN2503	III	8	IB8, IP3, T1, TP33	154	213	240	25 kg	100 kg	A	.....

BILLING CODE 4910–01–S

* * * * *

■ 10. In Appendix B to § 172.101, the List of Marine Pollutants is amended by removing three entries, revising one entry and adding one entry in appropriate alphabetical order to read as follows:

Appendix B to § 172.101—List of Marine Pollutants.

* * * * *

LIST OF MARINE POLLUTANTS

S, M, P (1)	Marine Pollutant (2)
[Remove:] ..	Diphenyl oxide and biphenyl phenyl ether mixtures
	Isoamyl mercaptan
	Pentanethiols
	Tetrachlorophenol
[Revise:]	
PP	2, 6-Di-tert-Butylphenol
[Add:]	
* *	* * *
	Chloropicrin
* *	* * *

■ 11. In § 172.102:

■ a. Paragraphs (b)(3), (b)(4), (b)(7) and (b)(8) are revised and a new paragraph (b)(9) is added.

■ b. In paragraph (c)(1), Special Provisions 47, 135, and 137 are revised; Special Provisions 163, 164, 165, 166, 167, 170 and 171 are added; and Special Provision 143 and 153 are removed.

■ c. In paragraph (c)(2), a new Special Provision A14 is added.

■ d. The introductory text of paragraph (c)(3) is revised; in paragraph (c)(3) Special Provision B69 is revised and paragraph (c)(4) is revised.

■ e. Paragraphs (c)(7)(viii) and (c)(8) are redesignated as paragraphs (c)(8) and (c)(9) respectively, the introductory paragraph of (c)(8) is revised, a new paragraph (c)(8)(ii) is added, Special Provisions TP3 and TP6 are revised and a new Special Provision TP32 and TP33 are added.

■ f. Paragraph (c)(7) is revised.

The additions and revisions read as follows:

§ 172.102 Special provisions.

* * * * *

(b) * * *

(3) A code containing the letter ''B'' refers to a special provision that applies only to bulk packaging requirements. Unless otherwise provided in this subchapter, these special provisions do not apply to UN, IM Specification portable tanks or IBCs.

(4) A code containing the letters ''IB'' or ''IP'' refers to a special provision that applies only to transportation in IBCs.

* * * * *

(7) A code containing the letter ''T'' refers to a special provision which applies only to transportation in UN or IM Specification portable tanks.

(8) A code containing the letters ''TP'' refers to a portable tank special provision for UN or IM Specification portable tanks that is in addition to those provided by the portable tank instructions or the requirements in part 178 of this subchapter.

(9) A code containing the letter ''W'' refers to a special provision that applies only to transportation by water.

(c) * * *

(1) * * *

Code/Special Provisions

* * * * *

47 Mixtures of solids that are not subject to this subchapter and flammable liquids may be transported under this entry without first applying the classification criteria of Division 4.1, provided there is no free liquid visible at the time the material is loaded or at the time the packaging or transport unit is closed. Except when the liquids are fully absorbed in solid material contained in sealed bags, each packaging must correspond to a design type that has passed a leakproofness test at the Packing Group II level. Small inner packagings consisting of sealed packets containing less than 10 mL of a Class 3 liquid in Packing Group II or III absorbed into a solid material are not subject to this subchapter provided there is no free liquid in the packet.

* * * * *

135 The entries ''Vehicle, flammable gas powered'' or ''Vehicle, flammable liquid powered,'' as appropriate, must be used when internal combustion engines are installed in a vehicle. These entries include hybrid electric vehicles powered by both an internal combustion engine and batteries.

* * * * *

137 Cotton, dry; flax, dry; and sisal, dry are not subject to the requirements of this subchapter when they are baled in accordance with ISO 8115, ''Cotton Bales—Dimensions and Density'' (IBR, see § 171.7 of this subchapter) to a density of not less than 360 kg/m^3 (22.1 lb/ft^3) for cotton, 400 kg/m^3 (24.97 lb/ft^3) for flax and 620 kg/m^3 (38.71 lb/ft^3) for sisal and transported in a freight container or closed transport vehicle.

* * * * *

163 Substances must satisfactorily pass Test Series 8 of the UN Manual of Tests and Criteria, Part I, Section 18 (IBR, see § 171.7 of this subchapter).

164 Substances must not be transported under this entry unless approved by the Associate Administrator on the basis of the results of appropriate tests according to Part I of the UN Manual of Tests and Criteria (IBR, see § 171.7 of this subchapter). The material must be packaged so that the percentage of diluent does not fall below that stated in the approval at any time during transportation.

165 These substances are susceptible to exothermic decomposition at elevated temperatures. Decomposition can be initiated by heat, moisture or by impurities (e.g., powdered metals (iron, manganese, cobalt, magnesium)). During the course of transportation, these substances must be shaded from direct sunlight and all sources of heat and be placed in adequately ventilated areas.

166 When transported in non-friable tablet form calcium hypochlorite, dry or hydrated, may be transported as a Packing Group III material.

167 These storage systems shall always be considered as containing hydrogen.

170 Air must be eliminated from the vapor space by nitrogen or other means.

171 This entry may only be used when the material is transported in non-friable tablet form or for granular or powered mixtures that have been shown to meet the PG III criteria in § 173.127.

(2) *''A'' codes.* These provisions apply only to transportation by aircraft:

Code/Special Provisions

* * * * *

A14 This material is not authorized to be transported as a limited quantity or consumer commodity in accordance with § 173.306 of this subchapter when transported aboard an aircraft.

* * * * *

(3) *''B'' codes.* These provisions apply only to bulk packagings. Except as otherwise provided in this subchapter, these special provisions do not apply to UN portable tanks or IBCs:

Code/Special Provisions

* * * * *

B69 Dry sodium cyanide or potassium cyanide may be shipped in sift-proof weather-resistant metal covered hopper cars, covered motor vehicles, portable tanks or non-specification bins. Bins must approved by the Associate Administrator.

* * * * *

(4) *Table 1 and Table 2—IB Codes and IP Special IBC Packing Provisions.* These provisions apply only to

transportation in IBCs. When no IBC code is assigned in the § 172.101 Table for a specific proper shipping name, or in § 173.225(e) for Type F organic peroxides, an IBC may not be used unless authorized by the Associate Administrator. The letter ''Z'' shown in the marking code for composite IBCs must be replaced with a capital code letter designation found in § 178.702(a)(2) of this subchapter to specify the material used for the outer packaging. Tables 1 and 2 follow:

TABLE 1.—IB CODES (IBC CODES)

IBC Code	Authorized IBCs
IB1	*Authorized IBCs:* Metal (31A, 31B and 31N). *Additional Requirement:* Only liquids with a vapor pressure less than or equal to 110 kPa at 50 °C (1.1 bar at 122 °F), or 130 kPa at 55 °C (1.3 bar at 131 °F) are authorized.
B2	*Authorized IBCs:* Metal (31A, 31B and 31N); Rigid plastics (31H1 and 31H2); Composite (31HZ1). *Additional Requirement:* Only liquids with a vapor pressure less than or equal to 110 kPa at 50 °C (1.1 bar at 122 °F), or 130kPa at 55 °C (1.3 bar at 131 °F) are authorized.
IB3	*Authorized IBCs:* Metal (31A, 31B and 31N); Rigid plastics (31H1 and 31H2); Composite (31HZ1 and 31HA2, 31HB2, 31HN2, 31HD2 and 31HH2). *Additional Requirement:* Only liquids with a vapor pressure less than or equal to 110 kPa at 50 °C (1.1 bar at 122 °F), or 130 kPa at 55 °C (1.3 bar at 131 °F) are authorized, except for UN2672 (also see Special Provision IP8 in Table 3 for UN2672).
IB4	*Authorized IBCs:* Metal (11A, 11B, 11N, 21A, 21B, 21N, 31A, 31B and 31N).
IB5	*Authorized IBCs:* Metal (11A, 11B, 11N, 21A, 21B, 21N, 31A, 31B and 31N); Rigid plastics (11H1, 11H2, 21H1, 21H2, 31H1 and 31H2); Composite (11HZ1, 21HZ1 and 31HZ1).
IB6	*Authorized IBCs:* Metal (11A, 11B, 11N, 21A, 21B, 21N, 31A, 31B and 31N); Rigid plastics (11H1, 11H2, 21H1, 21H2, 31H1 and 31H2); Composite (11HZ1, 11HZ2, 21HZ1, 21HZ2, 31HZ1 and 31HZ2). *Additional Requirement:* Composite IBCs 11HZ2 and 21HZ2 may not be used when the hazardous materials being transported may become liquid during transport.
IB7	*Authorized IBCs:* Metal (11A, 11B, 11N, 21A, 21B, 21N, 31A, 31B and 31N); Rigid plastics (11H1, 11H2, 21H1, 21H2, 31H1 and 31H2); Composite (11HZ1, 11HZ2, 21HZ1, 21HZ2, 31HZ1 and 31HZ2); Wooden (11C, 11D and 11F). *Additional Requirement:* Liners of wooden IBCs must be sift- proof.
IB8	*Authorized IBCs:* Metal (11A, 11B, 11N, 21A, 21B, 21N, 31A, 31B and 31N); Rigid plastics (11H1, 11H2, 21H1, 21H2, 31H1 and 31H2); Composite (11HZ1, 11HZ2, 21HZ1, 21HZ2, 31HZ1 and 31HZ2); Fiberboard (11G); Wooden (11C, 11D and 11F); Flexible (13H1, 13H2, 13H3, 13H4, 13H5, 13L1, 13L2, 13L3, 13L4, 13M1 or 13M2).
IB9	IBCs are only authorized if approved by the Associate Administrator.

TABLE 2.—IP CODES

IBC Code	Authorized IBCs
IP1	IBCs must be packed in closed freight containers or a closed transport vehicle.
IP2	When IBCs other than metal or rigid plastics IBCs are used, they must be offered for transportation in a closed freight container or a closed transport vehicle.
IP3	Flexible IBCs must be sift-proof and water-resistant or must be fitted with a sift-proof and water-resistant liner.
IP4	Flexible, fiberboard or wooden IBCs must be sift-proof and water-resistant or be fitted with a sift-proof and water-resistant liner.
IP5	IBCs must have a device to allow venting. The inlet to the venting device must be located in the vapor space of the IBC under maximum filling conditions.
IP6	Non-specification bulk bins are authorized.
IP7	For UN identification numbers 1327, 1363, 1364, 1365, 1386, 1841, 2211, 2217, 2793 and 3314, IBCs are not required to meet the IBC performance tests specified in part 178, subpart N of this subchapter.
IP8	Ammonia solutions may be transported in rigid or composite plastic IBCs (31H1, 31H2 and 31HZ1) that have successfully passed, without leakage or permanent deformation, the hydrostatic test specified in § 178.814 of this subchapter at a test pressure that is not less than 1.5 times the vapor pressure of the contents at 55 °C (131 °F).
IP13	Transportation by vessel in IBCs is prohibited.
IP14	Air shall be eliminated from the vapor space by nitrogen or other means.
IP20	Dry sodium cyanide or potassium cyanide is also permitted in siftproof, water-resistant, fiberboard IBCs when transported in closed freight containers or transport vehicles.

* * * * *

(7) *''T'' codes.* (i) These provisions apply to the transportation of hazardous materials in UN portable tanks. Portable tank instructions specify the requirements applicable to a portable tank when used for the transportation of a specific hazardous material. These requirements must be met in addition to the design and construction specifications in part 178 of this subchapter. Portable tank instructions T1 through T22 specify the applicable minimum test pressure, the minimum shell thickness (in reference steel), bottom opening requirements and pressure relief requirements. Liquefied compressed gases are assigned to portable tank instruction T50. Refrigerated liquefied gases that are authorized to be transported in portable tanks are specified in tank instruction T75.

(ii) The following table specifies the portable tank requirements applicable to ''T'' Codes T1 through T22. Column 1 specifies the ''T'' Code. Column 2 specifies the minimum test pressure, in bar (1 bar = 14.5 psig), at which the periodic hydrostatic testing required by § 180.605 of this subchapter must be conducted. Column 3 specifies the section reference for minimum shell thickness or, alternatively, the minimum shell thickness value. Column 4 specifies the applicability of § 178.275(g)(3) of this subchapter for the pressure relief devices. When the word ''Normal'' is indicated, § 178.275(g)(3) of this subchapter does not apply. Column 5 references the applicable requirements for bottom openings in part 178 of this

subchapter or references ''Prohibited'' which means bottom openings are prohibited. The table follows:

TABLE OF PORTABLE TANK T CODES T1–T22

[Portable tank codes T1–T22 apply to liquid and solid hazardous materials of Classes 3 through 9 which are transported in portable tanks.]

Portable tank instruction (1)	Minimum test pressure (bar) (2)	Minimum shell thickness (in mm-reference steel) (*See* § 178.274(d)) (3)	Pressure-relief requirements (*See* § 178.275(g)) (4)	Bottom opening requirements (*See* § 178.275(d)) (5)
T1	1.5	§ 178.274(d)(2)	Normal	§ 178.275(d)(2)0
T2	1.5	§ 178.274(d)(2)	Normal	§ 178.275(d)(3)
T3	2.65	§ 178.274(d)(2)	Normal	§ 178.275(d)(2)
T4	2.65	§ 178.274(d)(2)	Normal	§ 178.275(d)(3)
T5	2.65	§ 178.274(d)(2)	§ 178.275(g)(3)	Prohibited
T6	4	§ 178.274(d)(2)	Normal	§ 178.275(d)(2)
T7	4	§ 178.274(d)(2)	Normal	§ 178.275(d)(3)
T8	4	§ 178.274(d)(2)	Normal	Prohibited
T9	4	6 mm	Normal	Prohibited
T10	4	6 mm	§ 178.275(g)(3)	Prohibited
T11	6	§ 178.274(d)(2)	Normal	§ 178.275(d)(3)
T12	6	§ 178.274(d)(2)	§ 178.275(g)(3)	§ 178.275(d)(3)
T13	6	6 mm	Normal	Prohibited
T14	6	6 mm	§ 178.275(g)(3)	Prohibited
T15	10	§ 178.274(d)(2)	Normal	§ 178.275(d)(3)
T16	10	§ 178.274(d)(2)	§ 178.275(g)(3)	§ 178.275(d)(3)
T17	10	6 mm	Normal	§ 178.275(d)(3)
T18	10	6 mm	§ 178.275(g)(3)	§ 178.275(d)(3)
T19	10	6 mm	§ 178.275(g)(3)	Prohibited
T20	10	8 mm	§ 178.275(g)(3)	Prohibited
T21	10	10 mm	Normal	Prohibited
T22	10	10 mm	§ 178.275(g)(3)	Prohibited

(iii) *T50.* When portable tank instruction T50 is referenced in Column (7) of the § 172.101 Table, the applicable liquefied compressed gases are authorized to be transported in portable tanks in accordance with the requirements of § 173.313 of this subchapter.

(iv) *T75.* When portable tank instruction T75 is referenced in Column (7) of the § 172.101 Table, the applicable refrigerated liquefied gases are authorized to be transported in portable tanks in accordance with the requirements of § 178.277 of this subchapter.

(v) *UN and IM portable tank codes/special provisions.* When a specific portable tank instruction is specified by a ''T'' Code in Column (7) of the § 172.101 Table for a specific hazardous material, a specification portable tank conforming to an alternative tank instruction may be used if:

(A) The alternative portable tank has a higher or equivalent test pressure (for example, 4 bar when 2.65 bar is specified);

(B) The alternative portable tank has greater or equivalent wall thickness (for example, 10 mm when 6 mm is specified);

(C) The alternative portable tank has a pressure relief device as specified in the ''T'' Code. If a frangible disc is required in series with the reclosing pressure relief device for the specified portable tank, the alternative portable tank must be fitted with a frangible disc in series with the reclosing pressure relief device; and

(D) With regard to bottom openings—

(1) When two effective means are specified, the alternative portable tank is fitted with bottom openings having two or three effective means of closure or no bottom openings; or

(2) When three effective means are specified, the portable tank has no bottom openings or three effective means of closure; or

(3) When no bottom openings are authorized, the alternative portable tank must not have bottom openings.

(vi) Except when an organic peroxide is authorized under § 173.225(g), if a hazardous material is not assigned a portable tank ''T'' Code, the hazardous material may not be transported in a portable tank unless approved by the Associate Administrator.

(8) *''TP'' codes.* (i) These provisions apply to the transportation of hazardous materials in IM and UN Specification portable tanks. Portable tank special provisions are assigned to certain hazardous materials to specify requirements that are in addition to those provided by the portable tank instructions or the requirements in part 178 of this subchapter. Portable tank special provisions are designated with the abbreviation TP (tank provision) and are assigned to specific hazardous materials in Column (7) of the § 172.101 Table.

(ii) The following is a list of the portable tank special provisions:

* * * * *

Code/Special Provisions

* * * * *

TP3 The maximum degree of filling (in %) for solids transported above their melting points and for elevated temperature liquids shall be determined by the following:

$$\left(\text{Degree of filling} = 95\frac{dr}{df}\right).$$

Where: d_f and d_r are the mean densities of the liquid at the mean temperature of the liquid during filling and the maximum mean bulk temperature during transport respectively.

* * * * *

TP6 The tank must be equipped with a pressure release device which prevent a tank from bursting under fire engulfment conditions (the conditions prescribed in CGA pamphlet S–1.2 (see § 171.7 of this subchapter) or alternative conditions approved by the Associate Administrator may be used to consider the fire engulfment condition), taking

into account the properties of the hazardous material to be transported.

* * * * *

TP32 Portable tanks may be used subject to the following conditions:

a. Each portable tank constructed of metal must be fitted with a pressure-relief device consisting of a reclosing spring loaded type, a frangible disc or a fusible element. The set to discharge for the spring loaded pressure relief device and the burst pressure for the frangible disc, as applicable, must not be greater than 2.65 bar for portable tanks with minimum test pressures greater than 4 bar;

b. The suitability for transport in tanks must be demonstrated using test 8(d) in Test Series 8 (see UN Manual of Tests and Criteria, Part 1, Sub-section 18.7) (IBR, see § 171.7 of this subchapter) or an alternative means approved by the Associate Administrator.

TP33 The portable tank instruction assigned for this substance applies for granular and powdered solids and for solids which are filled and discharged at temperatures above their melting point which are cooled and transported as a solid mass. Solid substances transported or offered for transport above their melting point are authorized for transportation in portable tanks conforming to the provisions of portable tank instruction T4 for solid substances of packing group III or T7 for solid substances of packing group II, unless a tank with more stringent requirements for minimum shell thickness, maximum allowable working pressure, pressure-relief devices or bottom outlets are assigned in which case the more stringent tank instruction and special provisions shall apply. Filling limits must be in accordance with portable tank special provision TP3. Solids meeting the definition of an elevated temperature material must be transported in accordance with the applicable requirements of this subchapter.

* * * * *

■ 12. In § 172.202, paragraphs (a)(2)(iii) and (a)(5)(i) are revised to read as follows:

§ 172.202 Description of hazardous material on shipping papers.

(a) * * *

(2) * * *

(iii) For domestic shipments, primary and subsidiary hazard class or division names may be entered following the numerical hazard class or division, or following the basic description.

(5) * * *

(i) For Class I materials, the quantity must be the net explosive mass. For an explosive that is an article, such as Cartridges, small arms, the net explosive mass may be expressed in terms of the net mass of either the article or the explosive materials contained in the article.

* * * * *

■ 13. In § 172.203, paragraphs (f), (m)(2) and (o)(3) are revised and a new paragraph (i)(3) is added to read as follows:

§ 172.203 Additional description requirements.

* * * * *

(f) *Transportation by air.* A statement indicating that the shipment is within the limitations prescribed for either passenger and cargo aircraft or cargo aircraft only must be entered on the shipping paper.

* * * * *

(i) * * *

(3) For a hazardous material consigned under an ''n.o.s.'' entry not included in the segregation groups listed in section 3.1.4 of the IMDG Code but belonging, in the opinion of the consignor, to one of these groups, the appropriate segregation group must be shown in association with the basic description (for example, IMDG Code segregation group—1 Acids). When no segregation group is applicable, there is no requirement to indicate that condition.

* * * * *

(m) * * *

(2) For materials that are poisonous by inhalation (see § 171.8 of this subchapter), the words ''Poison-Inhalation Hazard'' or ''Toxic-Inhalation Hazard'' and the words ''Zone A'', ''Zone B'', ''Zone C'', or ''Zone D'', for gases or ''Zone A'' or ''Zone B'' for liquids, as appropriate, must be entered on the shipping description. The word ''Poison'' or ''Toxic'' or the phrase ''Poison-Inhalation Hazard'' or ''Toxic Inhalation Hazard'' need not be repeated if it otherwise appears in the shipping description.

* * * * *

(o) * * *

(3) The word ''SAMPLE'' must be included in association with the basic description when a sample of a Division 4.1 (self-reactive) material (see § 173.224(c)(3) of this subchapter) or Division 5.2 (organic peroxide) material (see § 173.225(b)(2) of this subchapter) is offered for transportation.

■ 14. In § 172.204, paragraph (c)(3) is revised to read as follows:

§ 172.204 Shipper's certification.

* * * * *

(c) * * *

(3) *Additional certification requirements.* Effective October 1, 2006, each person who offers a hazardous material for transportation by air must add to the certification required in this section the following statement:

''I declare that all of the applicable air transport requirements have been met.''

(i) Each person who offers any package or overpack of hazardous materials for transport by air must ensure that:

(A) The articles or substances are not prohibited for transport by air (see the § 172.101 Table);

(B) The articles or substances are properly classed, marked and labeled and otherwise in a condition for transport as required by this subchapter;

(C) The articles or substances are packaged in accordance with all the applicable air transport requirements, including appropriate types of packaging that conform to the packing requirements and the ''A'' Special Provisions in § 172.102; inner packaging and maximum quantity per package limits; the compatibility requirements (see, for example, § 173.24 of this subchapter); and requirements for closure for both inner and outer packagings, absorbent materials, and pressure differential in § 173.27 of this subchapter. Other requirements may also apply. For example, single packagings may be prohibited, inner packaging may need to be packed in intermediate packagings, and certain materials may be required to be transported in packagings meeting a more stringent performance level.

(ii) [Reserved]

* * * * *

■ 14a. The introductory text of § 172.315 is revised to read as follows:

§ 172.315 Packages containing limited quantities.

Except for transportation by aircraft or as otherwise provided in this subchapter, a package containing a limited quantity of hazardous materials is not required to be marked with the proper shipping name provided it is marked with the identification (ID) number, preceded by the letters ''UN'' or ''NA,'' as applicable, for the entry as shown in the § 172.101 Table, and placed within a square-on-point border in accordance with the following:

* * * * *

■ 15. A new § 172.317 is added to read as follows:

§ 172.317 KEEP AWAY FROM HEAT handling mark.

(a) *General.* For transportation by aircraft, each package containing self-

reactive substances of Division 4.1 or organic peroxides of Division 5.2 must be marked with the KEEP AWAY FROM HEAT handling mark specified in this section.

(b) *Location and design.* The marking must be a rectangle measuring at least 105 mm (4.1 inches) in height by 74 mm (2.9 inches) in width. Markings with not less than half this dimension are permissible where the dimensions of the package can only bear a smaller mark.

(c) *KEEP AWAY FROM HEAT handling mark.* The KEEP AWAY FROM HEAT handling mark must conform to the following:

(1) Except for size, the KEEP AWAY FROM HEAT handling mark must appear as follows:

BILLING CODE 4910–60–U

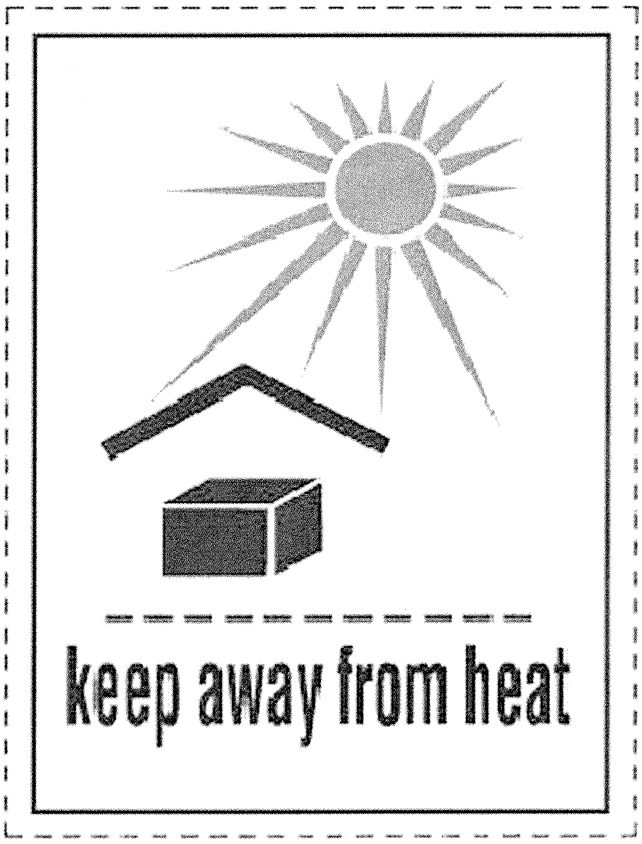

(2) The symbol, letters and border must be black and the background white, except for the starburst which must be red.

(3) The KEEP AWAY FROM HEAT handling marking required by paragraph (a) of this section must be durable, legible and displayed on a background of contrasting color.

§ 172.321 [Removed]

■ 16. Section 172.321 is removed.

PART 173—SHIPPERS—GENERAL REQUIREMENTS FOR SHIPMENTS AND PACKAGINGS

■ 17. The authority citation for part 173 continues to read as follows:

Authority: 49 U.S.C. 5101–5127, 44701; 49 CFR 1.45, 1.53.

■ 18. In § 173.3, paragraph (c) introductory text is revised to read as follows:

§ 173.3 Packaging and exceptions.

* * * * *

(c) *Salvage drums.* During transportation, as defined in 49 U.S.C. 5102(12), damaged or defective hazardous materials packages, hazardous materials packages that are found not to conform with the requirements of this subchapter, leaking hazardous materials packages, or hazardous materials that have spilled or leaked may be placed for repackaging or disposal in a metal or plastic removable head salvage drum that is compatible with the lading under the following conditions:

* * * * *

■ 19. In § 173.24, paragraphs (g) and (i) are revised to read as follows:

§ 173.24 General requirements for packagings and packages.

* * * * *

(g) *Venting.* Venting of packagings, to reduce internal pressure which may develop by the evolution of gas from the contents, is permitted only when—

(1) Transportation by aircraft is not involved;

(2) Except as otherwise provided in this subchapter, the evolved gases are not poisonous, likely to create a flammable mixture with air or be an asphyxiant under normal conditions of transportation;

(3) The packaging is designed so as to preclude an unintentional release of hazardous materials from the receptacle;

(4) For bulk packagings, other than IBCs, venting is authorized for the specific hazardous material by a special provision in the § 172.101 table or by the applicable bulk packaging specification in part 178 of this subchapter; and

(5) Intermediate bulk packagings (IBCs) may be vented when required to reduce internal pressure that may develop by the evolution of gas subject to the requirements of paragraphs (g)(1) through (g)(3) of this section. The IBC

must be of a type that has successfully passed (with the vent in place) the applicable design qualification tests with no release of hazardous material.

* * * * *

(i) *Air transportation.* Packages offered or intended for transportation by aircraft are subject to requirements additional to those of other modes of transport (*e.g.*, quantity limitations, requirements for absorbent material, pressure differential requirements, appropriate closure procedures, and specific packaging requirements) and must conform to the general requirements for transportation by aircraft in § 173.27.

■ 20. In § 173.25, paragraphs (a)(2) and (a)(4) are revised to read as follows:

§ 173.25 Authorized packagings and overpacks.

(a) * * *

* * * * *

(2) The overpack is marked with the proper shipping name and identification number, when applicable, and is labeled as required by this subchapter for each hazardous material contained therein, unless marking and labels representative of each hazardous material in the overpack are visible.

* * * * *

(4) The overpack is marked with the word ''OVERPACK'' when specification packagings are required, unless specification markings on the inside packages are visible. Alternatively, until October 1, 2007, the overpack may be marked with a statement indicating that the ''inside (inner) packages comply with prescribed specifications.''

* * * * *

■ 21. In § 173.27, paragraph (i) is revised to read as follows:

§ 173.27 General requirements for transportation by aircraft.

* * * * *

(i) Effective October 1, 2006, each person who offers a hazardous material for transportation by aircraft must include the certification statement specified in § 172.204(c)(3).

■ 22. In § 173.28, paragraph (c)(2) introductory text is revised to read as follows:

§ 173.28 Reuse, reconditioning and remanufacture of packagings.

* * * * *

(c) * * *

(2) For the purpose of this subchapter, reconditioning of a non-bulk packaging other than a metal drum includes:

* * * * *

■ 23. In § 173.115, a new paragraph (k) is added to read as follows:

§ 173.115 Class 2, Division 2.1, 2.2 and 2.3—Definitions.

* * * * *

(k) The following applies to aerosols (see § 171.8 of this subchapter):

(1) An aerosol must be assigned to Division 2.1 if the contents include 85% by mass or more flammable components and the chemical heat of combustion is 30 kJ/g or more;

(2) An aerosol must be assigned to Division 2.2 if the contents contain 1% by mass or less flammable components and the heat of combustion is less than 20 kJ/g.

(3) Aerosols not meeting the provisions of paragraphs (a) or (b) of this section must be classed in accordance with the appropriate tests of the UN Manual of Tests and Criteria (IBR, see § 171.7 of this subchapter).

(4) Division 2.3 gases may not be transported in an aerosol container.

(5) When the contents are classified as Division 6.1 or Class 8, PG III, the aerosol must be assigned a subsidiary hazard of Division 6.1 or Class 8.

(6) Substances of Division 6.1, PG I or II, and substances of Class 8, PG I are forbidden from transportation in an aerosol container.

(7) Flammable components are Class 3 flammable liquids, Class 4.1 flammable solids, or Division 2.1 flammable gases. The chemical heat of combustion must be determined in accordance with the UN Manual of Tests and Criteria (IBR, see § 171.7 of this subchapter).

■ 24. In § 173.128, paragraph (d)(1) is revised to read as follows:

§ 173.128 Class 5, Division 5.2—Definitions and types.

* * * * *

(d) *Approvals.* (1) An organic peroxide must be approved, in writing, by the Associate Administrator, before being offered for transportation or transported, including assignment of a generic type and shipping description, except for—

(i) An organic peroxide which is identified by technical name in the Organic Peroxides Table in § 173.225(c);

(ii) A mixture of organic peroxides prepared according to § 173.225(b); or

(iii) An organic peroxide which may be shipped as a sample under the provisions of § 173.225(b).

* * * * *

■ 25. In 173.132, paragraph (b)(1) is revised to read as follows:

§ 173.132 Class 6, Division 6.1—Definitions.

* * * * *

(b) * * *

(1) LD_{50} (median lethal dose) for acute oral toxicity is the statistically derived single dose of a substance that can be expected to cause death within 14 days in 50% of young adult albino rats when administered by the oral route. The LD_{50} value is expressed in terms of mass of test substance per mass of test animal (mg/kg).

* * * * *

■ 26. In § 173.136, paragraph (d) is added to read as follows:

§ 173.136 Class 8—Definitions.

* * * * *

(d) Steel or aluminum corrosion test data produced no later than September 30, 2005, using the procedures of § 173.137(c)(2), in effect on September 30, 2004 (see 49 CFR 173.137 revised as of October 1, 2003), for appropriate steel or aluminum types may be used for classification and assignment of packing group for Class 8 materials corrosive to steel or aluminum.

■ 27. In § 173.137, paragraph (c)(2) is revised to read as follows:

§ 173.137 Class 8—Assignment of packing group.

* * * * *

(c) * * *

* * * * *

(2) That do not cause full thickness destruction of intact skin tissue but exhibit a corrosion on steel or aluminum surfaces exceeding 6.25 mm (0.25 inch) a year at a test temperature of 55 °C (130 °F). The corrosion must be determined in accordance with the UN Manual of Tests and Criteria (IBR, see § 171.7 of this subchapter).

■ 28. In § 173.150, paragraph (a), the introductory text of paragraph (b), paragraph (b)(2) and paragraph (c) are revised to read as follows:

§ 173.150 Exceptions for Class 3 (flammable) and combustible liquids.

(a) *General.* Exceptions for hazardous materials shipments in the following paragraphs are permitted only if this section is referenced for the specific hazardous material in the § 172.101 Table of this subchapter.

(b) *Limited quantities.* Limited quantities of flammable liquids (Class 3) and combustible liquids are excepted from labeling requirements, unless the material also meets the definition of Division 6.1 or is offered for transportation or transported by aircraft, and the specification packaging requirements of this subchapter when packaged in combination packagings according to this paragraph. In addition, shipments of limited quantities are not subject to subpart F (Placarding) of part 172 of this subchapter. Each package must conform to the packaging

requirements of subpart B of this part and may not exceed 30 kg (66 pounds) gross weight. The following combination packagings are authorized:

* * * * *

(2) For flammable liquids in Packing Group II, inner packagings not over 1.0 L (0.3 gallons) net capacity each, unless the material has a subsidiary hazard of Division 6.1, Packing Group II, in which case the inner packagings may not exceed 100 mL (3.38 ounces) net capacity each, packed in a strong outer packaging.

* * * * *

(c) *Consumer commodities.* Except for a material that has a subsidiary hazard of Division 6.1, Packing Group II, a limited quantity which conforms to the provisions of paragraph (b) of this section and is a ''consumer commodity'' as defined in 171.8 of this subchapter, may be renamed ''Consumer commodity'' and reclassed as ORM–D material. In addition to the exceptions provided by paragraph (b) of this section, shipments of ORM–D materials are not subject to the shipping paper requirements of subpart C of part 172 of this subchapter, unless the material meets the definition of a hazardous substance, hazardous waste, marine pollutant, or are offered for transportation and transported by aircraft, and are eligible for the exceptions provided in § 173.156.

* * * * *

■ 29. In 173.151, paragraphs (b) and (c), and the introductory text of paragraph (d) are revised to read as follows:

§ 173.151 Exceptions for Class 4.

* * * * *

(b) *Limited quantities of Division 4.1.* Limited quantities of flammable solids (Division 4.1) in Packing Group II or III are excepted from labeling requirements, unless the material also meets the definition of Division 6.1 or is offered for transportation or transported by aircraft, and the specification packaging requirements of this subchapter when packaged in combination packagings according to this paragraph. In addition, shipments of limited quantities are not subject to subpart F (Placarding) of part 172 of this subchapter. Each package must conform to the packaging requirements of subpart B of this part and may not exceed 30 kg (66 pounds) gross weight. The following combination packagings are authorized:

(1) For flammable solids in Packing Group II, inner packagings not over 1.0 kg (2.2 pounds) net capacity each, unless the material has a subsidiary hazard of Division 6.1, Packing Group II, in which case the inner packagings may not exceed 0.5 kg (1.1 pounds) net capacity each, packed in a strong outer packaging.

(2) For flammable solids in Packing Group III, inner packagings not over 5.0 kg (11 pounds) net capacity each, packed in a strong outer packaging.

(c) *Consumer commodities.* Except for a material that has a subsidiary hazard of Division 6.1, Packing Group II, a limited quantity which conforms to the provisions of paragraph (b) of this section, and charcoal briquettes in packagings not exceeding 30 kg (66 pounds) gross weight, may be renamed ''Consumer commodity'' and reclassed as ORM–D material if the material is a ''consumer commodity'' as defined in 171.8 of this subchapter. In addition to the exceptions provided by paragraph (b) of this section, shipments of ORM–D materials are not subject to the shipping paper requirements of subpart C of part 172 of this subchapter, unless the material meets the definition of a hazardous substance, hazardous waste, marine pollutant, or is offered for transportation and transported by aircraft, and are eligible for the exceptions provided in § 173.156.

(d) *Limited quantities of Division 4.3.* Limited quantities of dangerous when wet (Division 4.3) solids in Packing Group II or III are excepted from labeling requirements, unless the material also meets the definition of Division 6.1 or is offered for transportation or transported by aircraft, and the specification packaging requirements of this subchapter when packaged in combination packagings according to this paragraph. In addition, shipments of limited quantities are not subject to subpart F (Placarding) of part 172 of this subchapter. Each package must conform to the packaging requirements of subpart B of this part and may not exceed 30 kg (66 pounds) gross weight. The following combination packagings are authorized:

* * * * *

■ 30. In § 173.152, the introductory text of paragraph (b), paragraph (b)(1), and paragraph (c) are revised to read as follows:

§ 173.152 Exceptions for Division 5.1 (oxidizers) and Division 5.2 (organic peroxides).

* * * * *

(b) *Limited quantities.* Limited quantities of oxidizers (Division 5.1) in Packing Group II and III and organic peroxides are excepted from labeling requirements, unless the material also meets the definition of Division 6.1 or is offered for transportation or transported by aircraft, and the specification packaging requirements of this subchapter when packaged in combination packagings according to this paragraph. In addition, shipments of limited quantities are not subject to subpart F (Placarding) of part 172 of this subchapter. Each package must conform to the packaging requirements of subpart B of this part and may not exceed 30 kg (66 pounds) gross weight. The following combination packagings are authorized:

(1) For oxidizers in Packing Group II, inner packagings not over 1.0 L (0.3 gallon) net capacity each for liquids or not over 1.0 kg (2.2 pounds) net capacity each for solids, unless the material has a subsidiary hazard of Division 6.1, Packing Group II, in which case the inner packagings may not exceed 100 mL (3.38 ounces) for liquids or 0.5 kg (1.1 pounds) for solids, packed in a strong outer packaging.

* * * * *

(c) *Consumer commodities.* Except for a material that has a subsidiary hazard of Division 6.1, Packing Group II, a limited quantity which conforms to the provisions of paragraph (b) of this section, and is a ''consumer commodity'' as defined in § 171.8 of this subchapter, may be renamed ''Consumer commodity'' and reclassed as ORM–D. In addition to the exceptions provided by paragraph (b) of this section, shipments of ORM–D materials are not subject to the shipping paper requirements of subpart C of part 172 of this subchapter, unless the material meets the definition of a hazardous substance, hazardous waste, marine pollutant, or are offered for transportation and transported by aircraft, and are eligible for the exceptions provided in § 173.156.

■ 31. In § 173.153, paragraph (b), and paragraph (c)(1) are revised to read as follows:

§ 173.153 Exceptions for Division 6.1 (poisonous materials).

* * * * *

(b) *Limited quantities.* The exceptions in this paragraph do not apply to poison-by-inhalation materials. Limited quantities of poisonous materials (Division 6.1) in Packing Group II and III are excepted from the specification packaging requirements of this subchapter when packaged in combination packagings according to this paragraph. In addition, shipments of limited quantities are not subject to subpart F (Placarding) of part 172 of this subchapter. Each package must conform to the packaging requirements of subpart B of this part and may not exceed 30 kg (66 pounds) gross weight.

The following combination packagings are authorized:

(1) For poisonous materials in Packing Group II, inner packagings not over 100 mL (3.38 ounces) each for liquids or 0.5 kg (1.1 pounds) each for solids, packed in a strong outer packaging.

(2) For poisonous materials in Packing Group III, inner packagings not over 4 L (1.0 gallon) each for liquids or 5.0 kg (11 pounds) each for solids, packed in a strong outer packaging.

(c) * * *

(1) A limited quantity of poisonous material in Packing Group III which conforms to the provisions of paragraph (b) of this section, and is a ''consumer commodity'' as defined in § 171.8 of this subchapter, may be renamed ''Consumer commodity'' and reclassed as ORM–D.

* * * * *

■ 32. In § 173.154, the introductory text of paragraph (b), paragraph (b)(1), and paragraph (c) are revised to read as follows:

§ 173.154 Exceptions for Class 8 (corrosive materials).

* * * * *

(b) *Limited quantities.* Limited quantities of corrosive materials (Class 8) in Packing Group II and III are excepted from labeling requirements, unless the material also meets the definition of Division 6.1 or is offered for transportation or transported by aircraft, and the specification packaging requirements of this subchapter when packaged in combination packagings according to this paragraph. In addition, shipments of limited quantities are not subject to subpart F (Placarding) of part 172 of this subchapter. Each package must conform to the packaging requirements of subpart B of this part and may not exceed 30 kg (66 pounds) gross weight. The following combination packagings are authorized:

(1) For corrosive materials in Packing Group II, inner packagings not over 1.0 L (0.3 gallon) net capacity each for liquids or not over 1.0 kg (2.2 pounds) net capacity each for solids, unless the material has a subsidiary hazard of Division 6.1, Packing Group II in which case the inner packagings may not exceed 100 mL (3.38 ounces) for liquids or 0.5 kg (1.1 pounds) for solids, packed in a strong outer packaging.

* * * * *

(c) *Consumer commodities.* Except for a material that has a subsidiary hazard of Division 6.1, Packing Group II, a limited quantity which conforms to the provisions of paragraph (b) of this section, and is a ''consumer commodity'' as defined in § 171.8 of this subchapter, may be renamed ''Consumer commodity'' and reclassed as ORM–D. In addition to the exceptions provided by paragraph (b) of this section, shipments of ORM–D materials are not subject to the shipping paper requirements of subpart C of part 172 of this subchapter, unless the material meets the definition of a hazardous substance, hazardous waste, marine pollutant, or are offered for transportation and transported by aircraft, and are eligible for the exceptions provided in § 173.156.

* * * * *

■ 33. In § 173.185, paragraphs (c)(3) and (e)(6) are revised to read as follows:

§ 173.185 Lithium batteries and cells.

* * * * *

(c) * * *

(3) Each cell or battery is of the type proven to be non-dangerous by testing in accordance with Tests in the UN Manual of Tests and Criteria (IBR; see § 171.7 of this subchapter). Such testing must be carried out on each type of cell or battery prior to the initial transport of that type. A cell or battery and equipment containing a cell or battery which was first transported prior to January 1, 2006 and is of a type proven to meet the criteria of Class 9 by testing in accordance with the tests in the UN Manual of Tests and Criteria, Third Revised Edition, 1999 is not required to be retested;

* * * * *

(e) * * *

(6) Each cell or battery is of the type proven to meet the lithium battery requirements in the UN Manual of Tests and Criteria (IBR; see § 171.7 of this subchapter). A cell or battery and equipment containing a cell or battery which was first transported prior to January 1, 2006 and is of a type proven to meet the criteria of Class 9 by testing in accordance with the tests in the UN Manual of Tests and Criteria, Third Revised Edition, 1999 is not required to be retested.

* * * * *

■ 34. In § 173.186, paragraph (e) is revised to read as follows:

§ 173.186 Matches.

* * * * *

(e) Packagings. Strike-anywhere matches must be tightly packed in securely closed chipboard, fiberboard, wooden, or metal inner packagings to prevent accidental ignition under conditions normally incident to transportation. Each inner packaging may contain no more than 700 strike-anywhere matches and must be packed in outer steel drums (1A2), aluminum drums (1B2), steel jerricans (3A2), wooden (4C1, 4C2), plywood (4D), reconstituted wood (4F) or fiberboard (4G) boxes, plywood (1D) or fiber (1G) drums. Gross weight of fiberboard boxes (4G) must not exceed 30 kg (66 pounds). Gross weight of other outer packagings must not exceed 45 kg (100 pounds).

■ 35. In § 173.187, a new paragraph (f) is added to read as follows:

§ 173.187 Pyrophoric solids, metals or alloys, n.o.s.

* * * * *

(f) In specification cylinders, as prescribed for any compressed gas, except for Specifications 8 and 3HT.

■ 36. In § 173.211, paragraph (c) is revised to read as follows:

§ 173.211 Non-bulk packagings for solid hazardous materials in Packing Group I.

* * * * *

(c) Except for transportation by passenger aircraft, the following single packagings are authorized:

Steel drum: 1A1 or 1A2
Aluminum drum: 1B1 or 1B2
Metal drum other than steel or aluminum: 1N1 or 1N2
Plastic drum: 1H1 or 1H2
Fiber drum: 1G
Steel jerrican: 3A1 or 3A2
Plastic jerrican: 3H1 or 3H2
Aluminum jerrican: 3B1 or 3B2
Steel box with liner: 4A
Aluminum box with liner: 4B
Natural wood box, sift proof: 4C2
Plastic receptacle in steel, aluminum, plywood, fiber or plastic drum: 6HA1, 6HB1, 6HD1, 6HG1 or 6HH1
Glass, porcelain or stoneware in steel, aluminum, plywood or fiber drum: 6PA1, 6PB1, 6PD1 or 6PG1
Glass, porcelain or stoneware in steel, aluminum, wooden or fiberboard box: 6PA2, 6PB2, 6PC or 6PG2
Glass, porcelain or stoneware in expanded or solid plastic packaging: 6PH1 or 6PH2
Cylinders, as prescribed for any compressed gas, except for Specification 8 and 3HT

■ 37. In § 173.212, paragraph (c) is revised to read as follows:

§ 173.212 Non-bulk packagings for solid hazardous materials in Packing Group III.

* * * * *

(c) Except for transportation by passenger aircraft, the following single packagings are authorized:

Steel drum: 1A1 or 1A2
Aluminum drum: 1B1 or 1B2
Plywood drum: 1D
Plastic drum: 1H1 or 1H2
Fiber drum: 1G
Metal drum other than steel or aluminum: 1N1 or 1N2

Wooden barrel: 2C1 or 2C2
Steel jerrican: 3A1 or 3A2
Plastic jerrican: 3H1 or 3H2
Aluminum jerrican: 3B1 or 3B2
Steel box: 4A
Steel box with liner: 4A
Aluminum box: 4B
Aluminum box with liner: 4B
Natural wood box: 4C1
Natural wood box, sift proof: 4C2
Plywood box: 4D
Reconstituted wood box: 4F
Fiberboard box: 4G
Expanded plastic box: 4H1
Solid plastic box: 4H2
Bag, woven plastic: 5H1, 5H2 or 5H3
Bag, plastic film: 5H4
Bag, textile: 5L1, 5L2 or 5L3
Bag, paper, multiwall, water resistant: 5M2
Plastic receptacle in steel, aluminum, plywood, fiber or plastic drum: 6HA1, 6HB1, 6HD1, 6HG1 or 6HH1
Plastic receptacle in steel, aluminum, wood, plywood or fiberboard box: 6HA2, 6HB2, 6HC, 6HD2 or 6HG2
Glass, porcelain or stoneware in steel, aluminum, plywood or fiber drum: 6PA1, 6PB1, 6PD1 or 6PG1
Glass, porcelain or stoneware in steel, aluminum, wooden or fiberboard box: 6PA2, 6PB1, 6PC or 6PG2
Glass, porcelain or stoneware in expanded or solid plastic packaging: 6PH1 or 6PH2
Cylinders, as prescribed for any compressed gas, except for Specification 8 and 3HT

■ 38. In § 173.213, paragraph (c) is revised to read as follows:

§ 173.213 Non-bulk packagings for solid hazardous materials in Packing Group III.

* * * * *

(c) The following single packagings are authorized:

Steel drum: 1A1 or 1A2
Aluminum drum: 1B1 or 1B2
Plywood drum: 1D
Plastic drum: 1H1 or 1H2
Fiber drum: 1G
Metal drum other than steel or aluminum: 1N1 or 1N2
Wooden barrel: 2C1 or 2C2
Steel jerrican: 3A1 or 3A2
Plastic jerrican: 3H1 or 3H2
Aluminum jerrican: 3B1 or 3B2
Steel box: 4A
Steel box with liner: 4A
Aluminum box: 4B
Aluminum box with liner: 4B
Natural wood box: 4C1
Natural wood box, sift proof: 4C2
Plywood box: 4D
Reconstituted wood box: 4F
Fiberboard box: 4G
Expanded plastic box: 4H1
Solid plastic box: 4H2
Bag, woven plastic: 5H1, 5H2 or 5H3
Bag, plastic film: 5H4
Bag, textile: 5L1, 5L2 or 5L3
Bag, paper, multiwall, water resistant: 5M2
Plastic receptacle in steel, aluminum, plywood, fiber or plastic drum: 6HA1, 6HB1, 6HD1, 6HG1 or 6HH1
Plastic receptacle in steel, aluminum, wood, plywood or fiberboard box: 6HA2, 6HB2, 6HC, 6HD2 or 6HG2
Glass, porcelain or stoneware in steel, aluminum, plywood or fiber drum: 6PA1, 6PB1, 6PD1 or 6PG1
Glass, porcelain or stoneware in steel, aluminum, wooden or fiberboard box: 6PA2, 6PB1, 6PC or 6PG2
Glass, porcelain or stoneware in expanded or solid plastic packaging: 6PH1 or 6PH2
Cylinders, as prescribed for any compressed gas, except for Specification 8 and 3HT

■ 39. Section 173.219 is revised to read as follows:

§ 173.219 Life-saving appliances.

(a) A life-saving appliance, self-inflating or non-self-inflating, containing small quantities of hazardous materials that are required as part of the life-saving appliance must conform to the requirements of this section. Packagings must conform to the general packaging requirements of subpart B of this part but need not conform to the requirements of part 178 of this subchapter. The appliances must be packed, so that they cannot be accidentally activated and, except for life vests, the hazardous materials must be in inner packagings packed so as to prevent movement. The hazardous materials must be an integral part of the appliance and in quantities that do not exceed those appropriate for the actual appliance when in use.

(b) Life saving appliances may contain:

(1) Division 2.2 compressed gases, including oxygen. However, oxygen generators are not permitted;

(2) Signal devices (Class 1), which may include smoke and illumination signal flares;

(3) Electric storage batteries and lithium batteries (Life saving appliances containing lithium batteries must be transported in accordance with § 173.185.);

(4) First aid or repair kits conforming to the applicable material and quantity limitations of § 173.161 of this subchapter;

(5) Strike-anywhere matches;

(6) For self-inflating life saving appliances only, cartridges power device of Division 1.4S, for purposes of the self-inflating mechanism provided that the quantity of explosives per appliance does not exceed 3.2 g; or

(7) Limited quantities of other hazardous materials.

(c) Hazardous materials in life saving appliances must be packaged as follows:

(1) Division 2.2 compressed gases must be packaged in cylinders in accordance with the requirements of this subchapter;

(2) Signal devices (Class 1) must be in packagings that prevent them from being inadvertently activated;

(3) Strike-anywhere matches must be cushioned to prevent movement or friction in a metal or composition receptacle with a screw-type closure in a manner that prevents them from being inadvertently activated;

(4) Limited quantities of other hazardous materials must be packaged in accordance with the requirements of this subchapter; and

(5) For other than transportation by aircraft, life saving appliances containing no hazardous materials other than carbon dioxide cylinders with a capacity not exceeding 100 cm^3 are not subject to the provisions of this subchapter provided they are overpacked in rigid outer packagings with a maximum gross mass of 40 kg.

■ 40. In § 173.220, paragraph (b)(2) is revised to read as follows:

§ 173.220 Internal combustion engines, self-propelled vehicles, mechanical equipment containing internal combustion engines, and battery powered vehicles or equipment.

* * * * *

(b) * * *

(2) *Flammable liquefied or compressed gas fuel.* (i) For transportation by motor vehicle, rail car or vessel, fuel tanks and fuel systems containing flammable liquefied or compressed gas fuel must be securely closed. For transportation by vessel, the requirements of §§ 176.78(k) and 176.905 of this subchapter apply.

(ii) For transportation by aircraft:

(A) Flammable gas-powered vehicles, machines, equipment or cylinders containing the flammable gas must be completely emptied of flammable gas. Lines from vessels to gas regulators, and gas regulators themselves, must also be drained of all traces of flammable gas. To ensure that these conditions are met, gas shut-off valves must be left open and connections of lines to gas regulators must be left disconnected upon delivery of the vehicle to the operator. Shut-off valves must be closed and lines reconnected at gas regulators before loading the vehicle aboard the aircraft; or alternatively

(B) Flammable gas powered vehicles, machines or equipment, which have

cylinders (fuel tanks) that are equipped with electrically operated valves, may be transported under the following conditions:

(1) The valves must be in the closed position and in the case of electrically operated valves, power to those valves must be disconnected;

(2) After closing the valves, the vehicle, equipment or machinery must be operated until it stops from lack of fuel before being loaded aboard the aircraft;

(3) In no part of the system between the pressure receptacle and the shut off valve shall the pressure exceed more than 5% of the maximum allowable working pressure of the system; and

(4) There must not be any residual liquefied gas in the system, including the fuel tank.

■ 41. In § 173.224, paragraph (b)(4) is revised to read as follows:

§ 173.224 Packaging and control and emergency temperatures for self-reactive materials.

* * * * *

(b) * * *

(4) *Packing method.* Column 4 specifies the highest packing method which is authorized for the self-reactive material. A packing method corresponding to a smaller package size may be used, but a packing method corresponding to a larger package size may not be used. The Table of Packing Methods in § 173.225(d) defines the packing methods. Bulk packagings for Type F self-reactive substances are authorized by § 173.225(f) for IBCs and § 173.225(h) for bulk packagings other than IBCs. Additional bulk packagings are authorized if approved by the Associate Administrator.

* * * * *

■ 42. Section 173.225 is revised to read as follows:

§ 173.225 Packaging requirements and other provisions for organic peroxides.

(a) *General.* When the § 172.101 table specifies that an organic peroxide must be packaged under this section, the organic peroxide must be packaged and offered for transportation in accordance with the provisions of this section. Each packaging must conform to the general requirements of subpart B of part 173 and to the applicable requirements of part 178 of this subchapter. Non-bulk packagings must meet Packing Group II performance levels. To avoid unnecessary confinement, metallic non-bulk packagings meeting Packing Group I are not authorized. No used material, other than production residues or regrind from the same production process, may be used in plastic packagings. Organic peroxides that require temperature control are subject to the provisions of § 173.21(f). When an IBC or bulk packaging is authorized and meets the requirements of paragraph (f) or (h) of this section, respectively, lower control temperatures than those specified for non-bulk packaging may be required. An organic peroxide not identified in paragraph (c), (e), or (g) of this section by technical name, or not assigned to a generic type in accordance with the provisions in paragraph (b)(3) of this section, must conform to the provisions of paragraph (c) of § 173.128.

(b) *New organic peroxides, formulations and samples.* (1) Except as provided for samples in paragraph (b)(2) of this section, no person may offer for transportation an organic peroxide that is not identified by technical name in the Organic Peroxides Table, Organic Peroxide IBC Table, or the Organic Peroxide Portable Tank Table of this section, or a formulation of one or more organic peroxides that are identified by technical name in one of those tables, unless the organic peroxide is assigned a generic type and shipping description and is approved by the Associate Administrator under the provisions of § 173.128(d) of this subchapter.

(2) *Samples.* Samples of new organic peroxides or new formulations of organic peroxides identified in the Organic Peroxides Table in paragraph (c) of this section, for which complete test data are not available, and that are to be transported for further testing or product evaluation, may be assigned an appropriate shipping description for organic peroxide Type C, packaged and offered for transportation, under the following conditions:

(i) Data available to the person offering the material for transportation must indicate that the sample would pose a level of hazard no greater than that of an organic peroxide Type B and that the control temperature, if any, is sufficiently low to prevent any dangerous decomposition and sufficiently high to prevent any dangerous phase separation;

(ii) The sample must be packaged in accordance with packing method OP2, for a liquid or solid, respectively;

(iii) Packages of the organic peroxide may be offered for transportation and transported in a quantity not to exceed 10 kg (22 pounds) per transport vehicle; and

(iv) One of the following shipping descriptions must be assigned:

(A) Organic peroxide Type C, liquid, 5.2, UN 3103;

(B) Organic peroxide Type C, solid, 5.2, UN 3104;

(C) Organic peroxide Type C, liquid, temperature controlled, 5.2, UN 3113; or

(D) Organic peroxide Type C, solid, temperature controlled, 5.2, UN 3114.

(3) *Mixtures.* Mixtures of organic peroxides individually identified in the Organic Peroxides Table in paragraph (c) of this section may be classified as the same type of organic peroxide as that of the most dangerous component and be transported under the conditions for transportation given for this type. If the stable components form a thermally less stable mixture, the SADT of the mixture must be determined and the new control and emergency temperature derived under the provisions of § 173.21(f).

(c) *Organic peroxides table.* The following Organic Peroxides Table specifies by technical name those organic peroxides that are authorized for transportation and not subject to the approval provisions of § 173.128 of this part. An organic peroxide identified by technical name in the following table is authorized for transportation only if it conforms to all applicable provisions of the table. The column headings of the Organic Peroxides Table are as follows:

(1) *Technical name.* The first column specifies the technical name.

(2) *ID number.* The second column specifies the identification (ID) number which is used to identify the proper shipping name in the § 172.101 table. The word ''EXEMPT'' appearing in the column denotes that the material is not regulated as an organic peroxide.

(3) *Concentration of organic peroxide.* The third column specifies concentration (mass percent) limitations, if any, in mixtures or solutions for the organic peroxide. Limitations are given as minimums, maximums, or a range, as appropriate. A range includes the lower and upper limits (*i.e.*, ''53–100'' means from, and including, 53% to, and including 100%). See introductory paragraph of § 172.203(k) of this subchapter for additional description requirements for an organic peroxide that may qualify for more than one generic listing, depending on its concentration.

(4) *Concentration of diluents.* The fourth column specifies the type and concentration (mass percent) of diluent or inert solid, when required. Other types and concentrations of diluents may be used if approved by the Associate Administrator.

(i) The required mass percent of ''Diluent type A'' is specified in column 4a. A diluent type A is an organic liquid that does not detrimentally affect the thermal stability or increase the hazard of the organic peroxide and with a boiling point not less than 150 °C at

atmospheric pressure. Type A diluents may be used for desensitizing all organic peroxides.

(ii) The required mass percent of ''Diluent type B'' is specified in column 4b. A diluent type B is an organic liquid which is compatible with the organic peroxide and which has a boiling point, at atmospheric pressure, of less than 150 °C (302 °F) but at least 60 °C (140 °F), and a flash point greater than 5 °C (41 °F). Type B diluents may be used for desensitizing all organic peroxides, when specified in the organic peroxide tables, provided that the boiling point is at least 60 °C (140 °F) above the SADT of the peroxide in a 50 kg (110 lbs) package. A type A diluent may be used to replace a type B diluent in equal concentration.

(iii) The required mass percent of ''Inert solid'' is specified in column 4c. An inert solid is a solid that does not detrimentally affect the thermal stability or hazard of the organic peroxide.

(5) *Concentration of water.* Column 5 specifies, in mass percent, the minimum amount of water, if any, which must be in formulation.

(6) *Packing method.* Column 6 specifies the highest packing method (largest packaging capacity) authorized for the organic peroxide. Lower numbered packing methods (smaller packaging capacities) are also authorized. For example, if OP3 is specified, then OP2 and OP1 are also authorized. The Table of Packing Methods in paragraph (d) of this section defines the non-bulk packing methods.

(7) *Temperatures.* Column 7a specifies the control temperature. Column 7b specifies the emergency temperature. Temperatures are specified only when temperature controls are required. (See § 173.21(f)).

(8) *Notes.* Column 8 specifies other applicable provisions, as set forth in notes following the table.

BILLING CODE 4910–60–U

ORGANIC PEROXIDE TABLE

Technical name	ID number	Concentration (mass %)	Diluent (mass %)			Water (mass %)	Packing method	Temperature (°C)		Notes
			A	B	I			Control	Emergency	
(1)	(2)	(3)	(4a)	(4b)	(4c)	(5)	(6)	(7a)	(7b)	(8)
Acetyl acetone peroxide	UN3105	≤42	≥48			≥8	OP7			2
Acetyl acetone peroxide [as a paste].	UN3106	≤32					OP7			21
Acetyl cyclohexanesulfonyl peroxide.	UN3112	≤82				≥12	OP4	−10	0	
Acetyl cyclohexanesulfonyl peroxide.	UN3115	≤32		≥68			OP7	−10	0	
tert-Amyl hydroperoxide	UN3107	≤88	≥6			≥6	OP8			
tert-Amyl peroxyacetate	UN3105	≤62	≥38				OP7			
tert-Amyl peroxybenzoate	UN3103	≤100					OP5			
tert-Amyl peroxy-2-ethylhexanoate.	UN3115	≤100					OP7	+20	+25	
tert-Amyl peroxy-2-ethylhexyl carbonate.	UN3105	≤100					OP7			
tert-Amyl peroxy isopropyl carbonate.	UN3103	≤77	≥23				OP5			
tert-Amyl peroxyneodecanoate.	UN3115	≤77		≥23			OP7	0	+10	
tert-Amyl peroxypivalate	UN3113	≤77		≥23			OP5	+10	+15	
tert-Amyl peroxy-3,5,5-trimethylhexanoate.	UN3101	≤100					OP5			
tert-Butyl cumyl peroxide	UN3107	>42–100					OP8			9
tert-Butyl cumyl peroxide	UN3108	≤52			≥48		OP8			9
n-Butyl-4,4-di-(tert-butylperoxy)valerate.	UN3103	>52–100					OP5			
n-Butyl-4,4-di-(tert-butylperoxy)valerate.	UN3108	≤52			≥48		OP8			
tert-Butyl hydroperoxide	UN3103	>79–90				≥10	OP5			13
tert-Butyl hydroperoxide	UN3105	≤80	≥20				OP7			4, 13
tert-Butyl hydroperoxide	UN3107	≤79				>14	OP8			13, 16
tert-Butyl hydroperoxide	UN3109	≤72				≥28	OP8			13
tert-Butyl hydroperoxide [and] Di-tert-butylperoxide.	UN3103	<82+>9				≥7	OP5			13
tert-Butyl monoperoxymaleate.	UN3102	>52–100					OP5			
tert-Butyl monoperoxymaleate.	UN3103	≤52	≥48				OP6			
tert-Butyl monoperoxymaleate.	UN3108	≤52			≥48		OP8			
tert-Butyl monoperoxymaleate [as a paste].	UN3108	≤52					OP8			
tert-Butyl peroxyacetate	UN3101	>52–77	≥23				OP5			
tert-Butyl peroxyacetate	UN3103	>32–52	≥48				OP6			
tert-Butyl peroxyacetate	UN3109	≤32		≥68			OP8			
tert-Butyl peroxybenzoate	UN3103	>77–100					OP5			

ORGANIC PEROXIDE TABLE—Continued

Technical name	ID number	Concentration (mass %)	Diluent (mass %)			Water (mass %)	Packing method	Temperature (°C)		Notes
			A	B	I			Control	Emergency	
(1)	(2)	(3)	(4a)	(4b)	(4c)	(5)	(6)	(7a)	(7b)	(8)
tert-Butyl peroxybenzoate	UN3105	>52–77	≥23				OP7			1
tert-Butyl peroxybenzoate	UN3106	≤52			≥48		OP7			
tert-Butyl peroxybutyl fumarate.	UN3105	≤52	≥48				OP7			
tert-Butyl peroxycrotonate	UN3105	≤77	≥23				OP7			
tert-Butyl peroxydiethylacetate.	UN3113	≤100					OP5	+20	+25	
tert-Butyl peroxy-2-ethylhexanoate.	UN3113	>52–100					OP6	+20	+25	
tert-Butyl peroxy-2-ethylhexanoate.	UN3117	>32–52		≥48			OP8	+30	+35	
tert-Butyl peroxy-2-ethylhexanoate.	UN3118	≤52			≥48		OP8	+20	+25	
tert-Butyl peroxy-2-ethylhexanoate.	UN3119	≤32		≥68			OP8	+40	+45	
tert-Butyl peroxy-2-ethylhexanoate [and] 2,2-di-(tert-Butylperoxy)butane.	UN3106	≤12+≤14	≥14		≥60		OP7			
tert-Butyl peroxy-2-ethylhexanoate [and] 2,2-di-(tert-Butylperoxy)butane.	UN3115	≤31+≤36		≥33			OP7	+35	+40	
tert-Butyl peroxy-2-ethylhexylcarbonate.	UN3105	≤100					OP7			
tert-Butyl peroxyisobutyrate.	UN3111	>52–77		≥23			OP5	+15	+20	
tert-Butyl peroxyisobutyrate.	UN3115	≤52		≥48			OP7	+15	+20	
tert-Butylperoxy isopropylcarbonate.	UN3103	≤77	≥23				OP5			
1-(2-tert-Butylperoxy isopropyl)-3-isopropenylbenzene.	UN3105	≤77	≥23				OP7			
1-(2-tert-Butylperoxy isopropyl)-3-isopropenylbenzene.	UN3108	≤42			≥58		OP8			
tert-Butyl peroxy-2-methylbenzoate.	UN3103	≤100					OP5			
tert-Butyl peroxyneodecanoate.	UN3115	>77–100					OP7	−5	+5	
tert-Butyl peroxyneodecanoate.	UN3115	≤77		≥23			OP7	0	+10	
tert-Butyl peroxyneodecanoate [as a stable dispersion in water].	UN3119	≤52					OP8	0	+10	
tert-Butyl peroxyneodecanoate [as a stable dispersion in water (frozen)].	UN3118	≤42					OP8	0	+10	
tert-Butyl peroxyneodecanoate.	UN3119	≤32	≥68				OP8	0	+10	
tert-Butyl peroxyneoheptanoate.	UN3115	≤77	≥23				OP7	0	+10	
tert-Butyl peroxyneoheptanoate [as a stable dispersion in water].	UN3117	≤42					OP8	0	+10	
tert-Butyl peroxypivalate	UN3113	>67–77	≥23				OP5	0	+10	
tert-Butyl peroxypivalate	UN3115	>27–67		≥33			OP7	0	+10	
tert-Butyl peroxypivalate	UN3119	≤27		≥73			OP8	+30	+35	
tert-Butylperoxy stearylcarbonate.	UN3106	≤100					OP7			
tert-Butyl peroxy-3,5,5-trimethylhexanoate.	UN3105	>32–100					OP7			

ORGANIC PEROXIDE TABLE—Continued

Technical name	ID number	Concentration (mass %)	Diluent (mass %)			Water (mass %)	Packing method	Temperature (°C)		Notes
			A	B	I			Control	Emergency	
(1)	(2)	(3)	(4a)	(4b)	(4c)	(5)	(6)	(7a)	(7b)	(8)
tert-Butyl peroxy-3,5,5-trimethylhexanoate.	UN3109	≤32		≥68			OP8			
3-Chloroperoxybenzoic acid.	UN3102	>57–86			≥14		OP1			
3-Chloroperoxybenzoic acid.	UN3106	≤57			≥3	≥40	OP7			
3-Chloroperoxybenzoic acid.	UN3106	≤77			≥6	≥17	OP7			
Cumyl hydroperoxide	UN3107	>90–98	≤10				OP8			13
Cumyl hydroperoxide	UN3109	≤90	≥10				OP8			13, 15
Cumyl peroxyneodecanoate.	UN3115	≤77		≥23			OP7	−10	0	
Cumyl peroxyneodecanoate [as a stable dispersion in water].	UN3119	≤52					OP8	−10	0	
Cumyl peroxyneoheptanoate.	UN3115	≤77	≥23				OP7	−10	0	
Cumyl peroxypivalate	UN3115	≤77		≥23			OP7	−5	+5	
Cyclohexanone peroxide(s).	UN3104	≤91				≥9	OP6			13
Cyclohexanone peroxide(s).	UN3105	≤72	≥28				OP7			5
Cyclohexanone peroxide(s) [as a paste].	UN3106	≤72					OP7			5, 21
Cyclohexanone peroxide(s).	Exempt	≤32			≥68		Exempt			
Diacetone alcohol peroxides.	UN3115	≤57		≥26		≥8	OP7	+40	+45	5
Diacetyl peroxide	UN3115	≤27		≥73			OP7	+20	+25	8,13
Di-tert-amyl peroxide	UN3107	≤100					OP8			
1,1-Di-(tert-amylperoxy)cyclohexane.	UN3103	≤82	≥18				OP6			
Dibenzoyl peroxide	UN3102	>51–100			≤48		OP2			3
Dibenzoyl peroxide	UN3102	>77–94				≥6	OP4			3
Dibenzoyl peroxide	UN3104	≤77				≥23	OP6			
Dibenzoyl peroxide	UN3106	≤62			≥28	≥10	OP7			
Dibenzoyl peroxide [as a paste].	UN3106	>52–62					OP7			21
Dibenzoyl peroxide	UN3106	>35–52			≥48		OP7			
Dibenzoyl peroxide	UN3107	>36–42	≥18			≤40	OP8			
Dibenzoyl peroxide [as a paste].	UN3108	≤56.5				≥15	OP8			
Dibenzoyl peroxide [as a paste].	UN3108	≤52					OP8			21
Dibenzoyl peroxide [as a stable dispersion in water].	UN3109	≤42					OP8			
Dibenzoyl peroxide	Exempt	≤35			≥65		Exempt			
Di-(4-tert-butylcyclohexyl)peroxydicarbonate.	UN3114	≤100					OP6	+30	+35	
Di-(4-tert-butylcyclohexyl)peroxydicarbonate [as a stable dispersion in water].	UN3119	≤42					OP8	+30	+35	
Di-tert-butyl peroxide	UN3107	>52–100					OP8			
Di-tert-butyl peroxide	UN3109	≤52		≥48			OP8			24
Di-tert-butyl peroxyazelate	UN3105	≤52	≥48				OP7			
2,2-Di-(tert-butylperoxy)butane.	UN3103	≤52	≥48				OP6			
1,6-Di-(tert-butylperoxycarbonyloxy)hexane.	UN3103	≤72	≥28				OP5			

ORGANIC PEROXIDE TABLE—Continued

Technical name	ID number	Concentration (mass %)	Diluent (mass %)			Water (mass %)	Packing method	Temperature (°C)		Notes
			A	B	I			Control	Emergency	
(1)	(2)	(3)	(4a)	(4b)	(4c)	(5)	(6)	(7a)	(7b)	(8)
1,1-Di-(tert-butylperoxy)cyclohexane.	UN3101	>80–100					OP5			
1,1-Di-(tert-butylperoxy)cyclohexane.	UN3103	>52–80	≥20				OP5			
1,1-Di-(tert-butylperoxy)cyclohexane.	UN3105	>42–52	≥48				OP7			
1,1-Di-(tert-butylperoxy)cyclohexane.	UN3106	≤42	≥13		≥45		OP7			
1,1-Di-(tert-butylperoxy)cyclohexane.	UN3107	≤27	≥25				OP8			22
1,1-Di-(tert-butylperoxy)cyclohexane.	UN3109	≤42	≥58				OP8			
1,1-Di-(tert-butylperoxy)cyclohexane.	UN3109	≤25	≥25	≥50			OP8			29
1,1-Di-(tert-butylperoxy)cyclohexane.	UN3109	≤13	≥13	≥74			OP8			
Di-n-butyl peroxydicarbonate.	UN3115	>27–52		≥48			OP7	−15	−5	
Di-n-butyl peroxydicarbonate.	UN3117	≤27		≥73			OP8	−10	0	
Di-n-butyl peroxydicarbonate [as a stable dispersion in water (frozen)].	UN3118	≤42					OP8	−15	−5	
Di-sec-butyl peroxydicarbonate.	UN3113	>52–100					OP4	−20	−10	6
Di-sec-butyl peroxydicarbonate.	UN3115	≤52		≥48			OP7	−15	−5	
Di-(2-tert-butylperoxyisopropyl)benzene(s).	UN3106	>42–100			≤57		OP7			1, 9
Di-(2-tert-butylperoxyisopropyl)benzene(s).	Exempt	≤42			≥58		Exempt			
Di-(tert-butylperoxy)phthalate.	UN3105	>42–52	≥48				OP7			
Di-(tert-butylperoxy)phthalate [as a paste].	UN3106	≤52					OP7			21
Di-(tert-butylperoxy)phthalate.	UN3107	≤42	≥58				OP8			
2,2-Di-(tert-butylperoxy)propane.	UN3105	≤52	≥48				OP7			
2,2-Di-(tert-butylperoxy)propane.	UN3106	≤42	≥13		≥45		OP7			
1,1-Di-(tert-butylperoxy)-3,3,5-trimethylcyclohexane.	UN3101	>90–100					OP5			
1,1-Di-(tert-butylperoxy)-3,3,5-trimethylcyclohexane.	UN3103	>57–90	≥10				OP5			
1,1-Di-(tert-butylperoxy)-3,3,5-trimethylcyclohexane.	UN3103	≤77		≥23			OP5			
1,1-Di-(tert-butylperoxy)-3,3,5-trimethylcyclohexane.	UN3110	≤57			≥43		OP8			
1,1-Di-(tert-butylperoxy)-3,3,5-trimethylcyclohexane.	UN3107	≤57	≥43				OP8			
1,1-Di-(tert-butylperoxy)-3,3,5-trimethylcyclohexane.	UN3107	≤32	≥26	≥42			OP8			
Dicetyl peroxydicarbonate	UN3116	≤100					OP7	+30	+35	

ORGANIC PEROXIDE TABLE—Continued

Technical name	ID number	Concentration (mass %)	Diluent (mass %)			Water (mass %)	Packing method	Temperature (°C)		Notes
			A	B	I			Control	Emergency	
(1)	(2)	(3)	(4a)	(4b)	(4c)	(5)	(6)	(7a)	(7b)	(8)
Dicetyl peroxydicarbonate [as a stable dispersion in water].	UN3119	≤42	.....	.....	.....	.....	OP8	+30	+35	
Di-4-chlorobenzoyl peroxide.	UN3102	≤77	.....	.....	.....	≥23	OP5	.....	.....	
Di-4-chlorobenzoyl peroxide [as a paste].	UN3106	≤52	.....	.....	.....	.....	OP7	.....	.....	21
Di-4-chlorobenzoyl peroxide.	Exempt	≤32	.....	.....	≥68	.....	Exempt	.....	.....	
Dicumyl peroxide	UN3110	>52–100	.....	.....	≤48	.....	OP8	.....	.....	
Dicumyl peroxide	Exempt	≤52	.....	.....	≥48	.....	Exempt	.....	.....	
Dicyclohexyl peroxydicarbonate.	UN3112	>91–100	.....	.....	.....	.....	OP3	+10	+15	
Dicyclohexyl peroxydicarbonate.	UN3114	≤91	.....	.....	.....	≥9	OP5	+10	+15	
Dicyclohexyl peroxydicarbonate [as a stable dispersion in water].	UN3119	≤42	.....	.....	.....	.....	OP8	+15	+20	
Didecanoyl peroxide	UN3114	≤100	.....	.....	.....	.....	OP6	+30	+35	
2,2-Di-(4,4-di(tert-butylperoxy)cyclohexyl)propane.	UN3106	≤42	.....	.....	≥58	.....	OP7	.....	.....	
2,2-Di-(4,4-di(tert-butylperoxy)cyclohexyl)propane.	UN3107	≤22	.....	≥78	.....	.....	OP8	.....	.....	
Di-2,4-dichlorobenzoyl peroxide.	UN3102	≤77	.....	.....	.....	≥23	OP5	.....	.....	
Di-2,4-dichlorobenzoyl peroxide [as a paste with silicone oil].	UN3106	≤52	.....	.....	.....	.....	OP7	.....	.....	
Di-(2-ethoxyethyl) peroxydicarbonate.	UN3115	≤52	.....	≥48	.....	.....	OP7	−10	0	
Di-(2-ethylhexyl) peroxydicarbonate.	UN3113	>77–100	.....	.....	.....	.....	OP5	−20	−10	
Di-(2-ethylhexyl) peroxydicarbonate.	UN3115	≤77	.....	≥23	.....	.....	OP7	−15	−5	
Di-(2-ethylhexyl) peroxydicarbonate [as a stable dispersion in water].	UN3117	≤62	.....	.....	.....	.....	OP8	−15	−5	
Di-(2-ethylhexyl) peroxydicarbonate [as a stable dispersion in water].	UN3119	≤52	.....	.....	.....	.....	OP8	−15	−5	
Di-(2-ethylhexyl) peroxydicarbonate [as a stable dispersion in water (frozen)].	UN3120	≤52	.....	.....	.....	.....	OP8	−15	−5	
2,2-Dihydroperoxypropane	UN3102	≤27	.....	.....	≥73	.....	OP5	.....	.....	
Di-(1-hydroxycyclohexyl)peroxide.	UN3106	≤100	.....	.....	.....	.....	OP7	.....	.....	
Diisobutyryl peroxide	UN3111	>32–52	.....	≥48	.....	.....	OP5	−20	−10	
Diisobutyryl peroxide	UN3115	≤32	.....	≥68	.....	.....	OP7	−20	−10	
Diisopropylbenzene dihydroperoxide.	UN3106	≤82	≥5	.....	.....	≥5	OP7	.....	.....	17
Diisopropyl peroxydicarbonate.	UN3112	>52–100	.....	.....	.....	.....	OP2	−15	−5	
Diisopropyl peroxydicarbonate.	UN3115	≤52	.....	≥48	.....	.....	OP7	−20	−10	
Diisopropyl peroxydicarbonate.	UN3115	≤28	≥72	.....	.....	.....	OP7	−15	−5	
Dilauroyl peroxide	UN3106	≤100	.....	.....	.....	.....	OP7	.....	.....	

ORGANIC PEROXIDE TABLE—Continued

Technical name	ID number	Concentration (mass %)	Diluent (mass %)			Water (mass %)	Packing method	Temperature (°C)		Notes
			A	B	I			Control	Emergency	
(1)	(2)	(3)	(4a)	(4b)	(4c)	(5)	(6)	(7a)	(7b)	(8)
Dilauroyl peroxide [as a stable dispersion in water].	UN3109	≤42	.....	.....	.....	.....	OP8	.....	.....	
Di-(3-methoxybutyl) peroxydicarbonate.	UN3115	≤52	.....	≥48	.....	.....	OP7	−5	+5	
Di-(2-methylbenzoyl)peroxide.	UN3112	≤87	.....	.....	.....	≥13	OP5	+30	+35	
Di-(4-methylbenzoyl)peroxide [as a paste with silicone oil].	UN3106	≤52	.....	.....	.....	.....	OP7	.....	.....	
Di-(3-methylbenzoyl) peroxide + Benzoyl (3-methylbenzoyl) peroxide + Dibenzoyl peroxide.	UN3115	≤20+≤18+≤4	.....	≥58	.....	.....	OP7	+35	+40	
2,5-Dimethyl-2,5-di-(benzoylperoxy)hexane.	UN3102	>82–100	.....	.....	.....	.....	OP5	.....	.....	
2,5-Dimethyl-2,5-di-(benzoylperoxy)hexane.	UN3106	≤82	.....	.....	≥18	.....	OP7	.....	.....	
2,5-Dimethyl-2,5-di-(benzoylperoxy)hexane.	UN3104	≤82	.....	.....	.....	≥18	OP5	.....	.....	
2,5-Dimethyl-2,5-di-(tert-butylperoxy)hexane.	UN3105	>52–100	.....	.....	.....	.....	OP7	.....	.....	
2,5-Dimethyl-2,5-di-(tert-butylperoxy)hexane.	UN3108	≤77	.....	.....	≥23	.....	OP8	.....	.....	
2,5-Dimethyl-2,5-di-(tert-butylperoxy)hexane.	UN3109	≤52	≥48	.....	.....	.....	OP8	.....	.....	
2,5-Dimethyl-2,5-di-(tert-butylperoxy)hexane [as a paste].	UN3108	≤47	.....	.....	.....	.....	OP8	.....	.....	
2,5-Dimethyl-2,5-di-(tert-butylperoxy)hexyne-3.	UN3101	>86–100	.....	.....	.....	.....	OP5	.....	.....	
2,5-Dimethyl-2,5-di-(tert-butylperoxy)hexyne-3.	UN3103	>52–86	≥14	.....	.....	.....	OP5	.....	.....	
2,5-Dimethyl-2,5-di-(tert-butylperoxy)hexyne-3.	UN3106	≤52	.....	.....	≥48	.....	OP7	.....	.....	
2,5-Dimethyl-2,5-di-(2-ethylhexanoylperoxy)hexane.	UN3113	≤100	.....	.....	.....	.....	OP5	+20	+25	
2,5-Dimethyl-2,5-dihydroperoxyhexane.	UN3104	≤82	.....	.....	.....	≥18	OP6	.....	.....	
2,5-Dimethyl-2,5-di-(3,5,5-trimethylhexanoylperoxy)hexane.	UN3105	≤77	≥23	.....	.....	.....	OP7	.....	.....	
1,1-Dimethyl-3-hydroxybutylperoxyneoheptanoate.	UN3117	≤52	≥48	.....	.....	.....	OP8	0	+10	
Dimyristyl peroxydicarbonate.	UN3116	≤100	.....	.....	.....	.....	OP7	+20	+25	
Dimyristyl peroxydicarbonate [as a stable dispersion in water].	UN3119	≤42	.....	.....	.....	.....	OP8	+20	+25	
Di-(2-neodecanoylperoxyisopropyl)benzene.	UN3115	≤52	≥48	.....	.....	.....	OP7	−10	0	
Di-n-nonanoyl peroxide	UN3116	≤100	.....	.....	.....	.....	OP7	0	+10	
Di-n-octanoyl peroxide	UN3114	≤100	.....	.....	.....	.....	OP5	+10	+15	
Di-(2-phenoxyethyl)peroxydicarbonate.	UN3102	>85–100	.....	.....	.....	.....	OP5	.....	.....	
Di-(2-phenoxyethyl)peroxydicarbonate.	UN3106	≤85	.....	.....	.....	≥15	OP7	.....	.....	
Dipropionyl peroxide	UN3117	≤27	.....	≥73	.....	.....	OP8	+15	+20	

ORGANIC PEROXIDE TABLE—Continued

Technical name	ID number	Concentration (mass %)	Diluent (mass %)			Water (mass %)	Packing method	Temperature (°C)		Notes
			A	B	I			Control	Emergency	
(1)	(2)	(3)	(4a)	(4b)	(4c)	(5)	(6)	(7a)	(7b)	(8)
Di-n-propyl peroxydicarbonate.	UN3113	≤100	.....	.....	.....	.....	OP3	−25	−15	
Di-n-propyl peroxydicarbonate.	UN3113	≤77	.....	≥23	.....	.....	OP5	−20	−10	
Disuccinic acid peroxide	UN3102	>72–100	.....	.....	.....	.....	OP4	.....	.....	18
Disuccinic acid peroxide	UN3116	≤72	.....	.....	.....	≥28	OP7	+10	+15	
Di-(3,5,5-trimethylhexanoyl)peroxide.	UN3115	>38–82	≥18	.....	.....	.....	OP7	0	+10	
Di-(3,5,5-trimethylhexanoyl)peroxide [as a stable dispersion in water].	UN3119	≤52	.....	.....	.....	.....	OP8	+10	+15	
Di-(3,5,5-trimethylhexanoyl)peroxide.	UN3119	≤38	≥62	.....	.....	.....	OP8	+20	+25	
Ethyl 3,3-di-(tert-amylperoxy)butyrate.	UN3105	≤67	≥33	.....	.....	.....	OP7	.....	.....	
Ethyl 3,3-di-(tert-butylperoxy)butyrate.	UN3103	>77–100	.....	.....	.....	.....	OP5	.....	.....	
Ethyl 3,3-di-(tert-butylperoxy)butyrate.	UN3105	≤77	≥23	.....	.....	.....	OP7	.....	.....	
Ethyl 3,3-di-(tert-butylperoxy)butyrate.	UN3106	≤52	.....	.....	≥48	.....	OP7	.....	.....	
1-(2-ethylhexanoylperoxy)-1,3-Dimethylbutyl peroxypivalate.	UN3115	≤52	≥45	≥10	.....	.....	OP7	−20	−10	
tert-Hexyl peroxyneodecanoate.	UN3115	≤71	≥29	.....	.....	.....	OP7	0	+10	
tert-Hexyl peroxypivalate	UN3115	≤72	.....	≥28	.....	.....	OP7	+10	+15	
Isopropyl sec-butyl peroxydicarbonat +Di-sec-butyl peroxydicarbonate+Di-isopropyl peroxydicarbonate.	UN3111	≤52+≤28+≤22	.....	.....	.....	.....	OP5	−20	−10	
Isopropyl sec-butyl peroxydicarbonate+Di-sec-butyl peroxydicarbonate+Di-isopropyl peroxydicarbonate.	UN3115	≤32+≤15−18+≤12−15	≥38	.....	.....	.....	OP7	−20	−10	
Isopropylcumyl hydroperoxide.	UN3109	≤72	≥28	.....	.....	.....	OP8	.....	.....	13
p-Menthyl hydroperoxide	UN3105	> 72–100	.....	.....	.....	.....	OP7	.....	.....	13
p-Menthyl hydroperoxide	UN3109	≤72	≥28	.....	.....	.....	OP8	.....	.....	
Methylcyclohexanone peroxide(s).	UN3115	≤67	.....	≥33	.....	.....	OP7	+35	+40	
Methyl ethyl ketone peroxide(s).	UN3101	≤52	≥48	.....	.....	.....	OP5	.....	.....	5, 13, 29
Methyl ethyl ketone peroxide(s).	UN3105	≤45	≥55	.....	.....	.....	OP7	.....	.....	5, 29
Methyl ethyl ketone peroxide(s).	UN3107	≤40	≥60	.....	.....	.....	OP8	.....	.....	7
Methyl isobutyl ketone peroxide(s).	UN3105	≤62	≥19	.....	.....	.....	OP7	.....	.....	5, 23
Organic peroxide, liquid, sample.	UN3103	.....	.....	.....	.....	.....	OP2	.....	.....	12
Organic peroxide, liquid, sample, temperature controlled.	UN3113	.....	.....	.....	.....	.....	OP2	.....	.....	12
Organic peroxide, solid, sample.	UN3104	.....	.....	.....	.....	.....	OP2	.....	.....	12
Organic peroxide, solid, sample, temperature controlled.	UN3114	.....	.....	.....	.....	.....	OP2	.....	.....	12

ORGANIC PEROXIDE TABLE—Continued

Technical name	ID number	Concentration (mass %)	Diluent (mass %)			Water (mass %)	Packing method	Temperature (°C)		Notes
			A	B	I			Control	Emergency	
(1)	(2)	(3)	(4a)	(4b)	(4c)	(5)	(6)	(7a)	(7b)	(8)
Peroxyacetic acid, type D, stabilized.	UN3105	≤43	.....	.....	.....	.....	OP7	.....	.....	13, 20
Peroxyacetic acid, type E, stabilized.	UN3107	≤43	.....	.....	.....	.....	OP8	.....	.....	13, 20
Peroxyacetic acid, type F, stabilized.	UN3109	≤43	.....	.....	.....	.....	OP8	.....	.....	13, 20, 28
Peroxyacetic acid or peracetic acid [with not more than 7% hydrogen peroxide].	UN3107	≤36	.....	.....	.....	≥15	OP8	.....	.....	13, 20, 28, 29
Peroxyacetic acid or peracetic acid [with not more than 20% hydrogen peroxide].	Exempt	≤6	.....	.....	.....	≥60	Exempt	.....	.....	28, 29
Peroxyacetic acid or peracetic acid [with not more than 26% hydrogen peroxide].	UN3109	≤17	.....	.....	.....	.....	OP8	.....	.....	13, 20, 28, 29
Peroxylauric acid	UN3118	≤100	.....	.....	.....	.....	OP8	+35	+40	
Pinanyl hydroperoxide	UN3105	>56–100	.....	.....	.....	.....	OP7	.....	.....	13
Pinanyl hydroperoxide	UN3109	≤56	≥44	.....	.....	.....	OP8	.....	.....	
Polyether poly-tert-butylperoxycarbonate.	UN3107	≤52	.....	≥48	.....	.....	OP8	.....	.....	
Tetrahydronaphthyl hydroperoxide.	UN3106	≤100	.....	.....	.....	.....	OP7	.....	.....	
1,1,3,3-Tetramethylbutyl hydroperoxide.	UN3105	≤100	.....	.....	.....	.....	OP7	.....	.....	
1,1,3,3-Tetramethylbutyl peroxy-2-ethylhexanoate.	UN3115	≤100	.....	.....	.....	.....	OP7	+15	+20	
1,1,3,3-Tetramethylbutyl peroxyneodecanoate.	UN3115	≤72	.....	≥28	.....	.....	OP7	-5	+5	
1,1,3,3-Tetramethylbutyl peroxyneodecanoate [as a stable dispersion in water].	UN3119	≤52	.....	.....	.....	.....	OP8	−5	+5	
1,1,3,3-tetramethylbutyl peroxypivalate.	UN3115	≤77	≥23	.....	.....	.....	OP7	0	+10	
3,6,9-Triethyl-3,6,9-trimethyl-1,4,7-triperoxonane.	UN3105	≤42	≥58	.....	.....	.....	OP7	.....	.....	26

BILLING CODE 4910–60–S

Notes

1. For domestic shipments, OP8 is authorized.
2. Available oxygen must be <4.7%.
3. For concentrations <80% OP5 is allowed. For concentrations of at least 80% but <85%, OP4 is allowed. For concentrations of at least 85%, maximum package size is OP2.
4. The diluent may be replaced by di-tert-butyl peroxide.
5. Available oxygen must be ≤9% with or without water.
6. For domestic shipments, OP5 is authorized.
7. Available oxygen must be ≤8.2% with or without water.
8. Only non-metallic packagings are authorized.
9. For domestic shipments this material maybe transported under the provisions of paragraph (h)(3)(xii) of this section.
10. [Reserved]
11. [Reserved]
12. Samples may only be offered for transportation under the provisions of paragraph (c)(2) of this section.
13. ''Corrosive'' subsidiary risk label is required.
14. [Reserved]
15. No ''Corrosive'' subsidiary risk label is required for concentrations below 80%.
16. With <6% di-tert-butyl peroxide.
17. With ≥8% 1-isopropylhydroperoxy-4-isopropylhydroxybenzene.
18. Addition of water to this organic peroxide will decrease its thermal stability.
19. [Reserved]
20. Mixtures with hydrogen peroxide, water and acid(s).
21. With diluent type A, with or without water.
22. With ≥36% diluent type A by mass, and in addition ethylbenzene.
23. With ≥19% diluent type A by mass, and in addition methyl isobutyl ketone.
24. Diluent type B with boiling point >100 C.
25. No ''Corrosive'' subsidiary risk label is required for concentrations below 56%.
26. Available oxygen must be ≤7.6%.
27. Formulations derived from distillation of peroxyacetic acid originating from peroxyacetic acid in a concentration of not more than 41% with water, total active oxygen less than or equal to 9.5% (peroxyacetic acid plus hydrogen peroxide).
28. For the purposes of this section, the names ''Peroxyacetic acid'' and ''Peracetic acid'' are synonymous.
29. For international transportation, shipments of this material must be accompanied by a Competent Authority approval from the Associate Administrator.

(d) *Packing Method Table.* Packagings for organic peroxides and self-reactive substances are listed in the Maximum

Quantity per Packing Method Table. The packing methods are designated OP1 to OP8. The quantities specified for each packing method represent the maximum that is authorized.

(1) The following types of packagings are authorized:

(i) Drums: 1A1, 1A2, 1B1, 1B2, 1D, 1G, 1H1, 1H2;

(ii) Jerricans: 3A1, 3A2, 3B1, 3B2, 3H1, 3H2;

(iii) Boxes: 4C1, 4C2, 4D, 4F, 4G, 4H1, 4H2, 4A, 4B; or

(iv) Composite packagings with a plastic inner receptacle: 6HA1, 6HA2, 6HB1, 6HB2, 6HC, 6HD1, 6HD2, 6HG1, 6HG2, 6HH1, 6HH2.

(2) Metal packaging (including inner packagings of combination packagings and outer packagings of combination or composite packagings) are used only for packing methods OP7 and OP8.

(3) In combination packagings, glass receptacles are used only as inner packagings with a maximum content of 0.5 kg for solids or 0.5 L for liquids.

(4) The maximum quantity per packaging or package for Packing Methods OP1–OP8 must be as follows:

MAXIMUM QUANTITY PER PACKAGING/PACKAGE

[For Packing Methods OP1 to OP8]

Maximum quantity	Packing Method							
	OP1	OP2	OP3	OP4 [1]	OP5	OP6	OP7	OP8
Solids and combination packagings (liquid and solid) (kg)	0.5	0.5/10	5	5	25	50	50	[2] 400
Liquids (L)	0.5	.....	5	.....	30	60	60	[3] 225

[1] If two values are given, the first applies to the maximum net mass per inner packaging and the second to the maximum net mass of the complete package.

[2] 60 kg for jerricans/200 kg for boxes and, for solids, 400 kg in combination packagings with outer packagings comprising boxes (4C1, 4C2, 4D, 4F, 4G, 4H1, and 4H2) and with inner packagings of plastics or fiber with a maximum net mass of 25 kg.

[3] 60 L for jerricans.

(e) *Organic Peroxide IBC Table.* The following Organic Peroxide IBC Table specifies, by technical name, those organic peroxides that are authorized for transportation in certain IBCs and not subject to the approval provisions of § 173.128 of this part. Additional requirements for authorized IBCs are found in paragraph (f) of this section.

ORGANIC PEROXIDE IBC TABLE

UN No.	Organic peroxide	Type of IBC	Maximum quantity (litres)	Control temperature	Emergency temperature
3109	ORGANIC PEROXIDE, TYPE F, LIQUID.				
	tert-Butyl hydroperoxide, not more than 72% with water.	31A	1250		
	tert-Butyl peroxyacetate, not more than 32% in diluent type A.	31A	1250		
	.....	31HA1	1000		
	tert-Butyl peroxy-3,5,5-trimethylhexanoate, not more than 32% in diluent type A.	31A	1250		
	.....	31HA1	1000		
	Cumyl hydroperoxide, not more than 90% in diluent type A.	31HA1	1250		
	Dibenzoyl peroxide, not more than 42% as a stable dispersion.	31H1	1000		
	Di-tert-butyl peroxide, not more than 52% in diluent type B.	31A	1250		
	.....	31HA1	1000		
	1,1-Di-(tert-butylperoxy) cyclohexane, not more than 42% in diluent type A.	31H1	1000		
	Dicumyl peroxide, less than or equal to 100%	31A	1250		
	.....	31HA1	1000		
	Dilauroyl peroxide, not more than 42%, stable dispersion, in water.	31HA1	1000		
	Isopropyl cumyl hydroperoxide, not more than 72% in diluent type A.	31HA1	1250		
	p-Menthyl hydroperoxide, not more than 72% in diluent type A.	31HA1	1250		
	Peroxyacetic acid, stabilized, not more than 17%	31H1	1500		
	.....	31HA1	1500		
	.....	31A	1500		
	Peroxyacetic acid, with not more than 26% hydrogen peroxide.	31A	1500		
	.....	31HA1	1500		
	Peroxyacetic acid, type F, stabilized	31A	1500		
	.....	31HA1	1500		
3110	ORGANIC PEROXIDE TYPE F, SOLID.				
	Dicumyl peroxide, less than or equal to 100%	31A	2000		

ORGANIC PEROXIDE IBC TABLE—Continued

UN No.	Organic peroxide	Type of IBC	Maximum quantity (litres)	Control temperature	Emergency temperature
	.....	31H1			
	.....	31HA1			
3119	ORGANIC PEROXIDE, TYPE F, LIQUID, TEMPERATURE CONTROLLED.				
	tert-Butyl peroxy-2-ethylhexanoate, not more than 32% in diluent type B.	31HA1	1000	+30 °C	+35 °C
	.....	31A	1250	+30 °C	+35 °C
	tert-Butyl peroxyneodecanoate, not more than 32% in diluent type A.	31A	1250	0 °C	+10 °C
	tert-Butyl peroxyneodecanoate, not more than 42% stable dispersion, in water.	31A	1250	−5 °C	+5 °C
	tert-Butyl peroxypivalate, not more than 27% in diluent type B.	31HA1	1000	+10 °C	+15 °C
	.....	31A	1250	+10 °C	+15 °C
	Cumyl peroxyneodecanoate, not more than 52%, stable dispersion, in water.	31A	1250	−15 °C	−5 °C
	Dicyclohexylperoxydicarbonate, not more than 42% as a stable dispersion, in water.	31A	1250	+10 °C	+15 °C
	Di-(4-tert-butylcyclohexyl) peroxydicarbonate, not more than 42%, stable dispersion, in water.	31HA1	1000	+30 °C	+35 °C
	Dicetyl peroxydicarbonate, not more than 42%, stable dispersion, in water.	31HA1	1000	+30 °C	+35 °C
	Di-(2-ethylhexyl) peroxydicarbonate, not more than 52%, stable dispersion, in water.	31A	1250	−20 °C	−10 °C
	Dimyristyl peroxydicarbonate, not more than 42%, stable dispersion, in water.	31HA1	1000	+15 °C	+20 °C
	Di-(3,5,5-trimethylhexanoyl) peroxide, not more than 38% in diluent type A.	31HA1	1000	+10 °C	+15 °C
	.....	31A	1250	+10 °C	+15 °C
	Di-(3,5,5-trimethylhexanoyl) peroxide, not more than 52%, stable dispersion, in water.	31A	1250	+10 °C	+15 °C
	1,1,3,3-Tetramethylbutyl peroxyneodecanoate, not more than 52%, stable dispersion, in water.	31A	1250	−5 °C	+5 °C

(f) *IBCs.* IBCs are authorized subject to the conditions and limitations of this section if the IBC type is authorized according to paragraph (e) of this section, as applicable, and the IBC conforms to the requirements in subpart O of part 178 of this subchapter at the Packing Group II performance level. Type F organic peroxides or self-reactive substances are not authorized for transportation in IBCs other than those specified, unless approved by the Associate Administrator.

(1) IBCs shall be provided with a device to allow venting during transportation. The inlet to the pressure relief device shall be sited in the vapor space of the IBC under maximum filling conditions during transportation.

(2) To prevent explosive rupture of metal IBCs or composite IBCs with a complete metal casing, the emergency-relief devices shall be designed to vent all the decomposition products and vapors evolved during self-accelerating decomposition or during a period of not less than one hour of complete fire-engulfment as calculated by the formula in paragraph (h)(3)(v) of this section. The control and emergency temperatures specified in the Organic Peroxide IBC Table are based on a non-insulated IBC.

(g) Organic Peroxide Portable Tank Table. The following Organic Peroxide Portable Tank Table provides certain portable tank requirements and identifies, by technical name, those organic peroxides that are authorized for transportation in the bulk packagings listed in paragraph (h). Organic peroxides listed in this table, provided they meet the specific packaging requirements found in paragraph (h), are not subject to the approval provisions of § 173.128 of this part.

ORGANIC PEROXIDE PORTABLE TANK TABLE

UN No.	Hazardous material	Minimum test pressure (bar)	Minimum shell thickness (mm-reference steel) See. . .	Bottom opening requirements See. . .	Pressure-relief requirements See. . .	Filling limits	Control temperature	Emergency temperature
3109	ORGANIC PEROXIDE, TYPE F, LIQUID.							
	tert-Butyl hydroperoxide, not more than 72% with water. *Provided that steps have been taken to achieve the safety equivalence of 65% tert-Butyl hydroperoxide and 35% water.	4	§ 178.274(d)(2)	§ 178.275(d)(3)	§ 178.275(g)(1)	Not more than 90% at 59 °F (15 °C)		
	Cumyl hydro-peroxide, not more than 90% in diluent type A.	4	§ 178.274(d)(2)	§ 178.275(d)(3)	§ 178.275(g)(1)	Not more than 90% at 59 °F (15 °C)		
	Di-tert-butyl peroxide, not more 32% in diluent type A.	4	§ 178.274(d)(2)	§ 178.275(d)(3)	§ 178.275(g)(1)	Not more than 90% at 59 °F (15 °C)		
	Dicumyl peroxide, less than or equal to 100% in diluent type B.	4	§ 178.274(d)(2)	§ 178.275(d)(3)	§ 178.275(g)(1)	Not more than 90% at 59 °F (15 °C)		
	Isopropyl cumyl hydroperoxide, not more 72% in diluent type A.	4	§ 178.274(d)(2)	§ 178.275(d)(3)	§ 178.275(g)(1)	Not more than 90% at 59 °F (15 °C)		
	p-Menthyl hydro-peroxide, not more 72% in diluent type A.	4	§ 178.274(d)(2)	§ 178.275(d)(3)	§ 178.275(g)(1)	Not more than 90% at 59 °F (15 °C)		
	Pinanyl hydro-peroxide, not more than 56% in diluent type A.	4	§ 178.274(d)(2)	§ 178.275(d)(3)	§ 178.275(g)(1)	Not more than 90% at 59 °F (15 °C)		
3110	ORGANIC PEROXIDE, TYPE F, SOLID.							
	Dicumyl peroxide less than or equal to 100% with inert solids. *Maximum quantity per portable tank 2,000 kg.	4	§ 178.274(d)(2)	§ 178.275(d)(3)	§ 178.275(g)(1)	Not more than 90% at 59 °F (15 °C)		
3119	ORGANIC PEROXIDE, TYPE F, LIQUID, TEMPERATURE CONTROLLED.							
	tert-Butyl peroxyacetate, not more than 32% in diluent type B.	4	§ 178.274(d)(2)	§ 178.275(d)(3)	§ 178.275(g)(1)	Not more than 90% at 59 °F (15 °C)	+30 °C	+35 °C
	tert-Butyl peroxy-2-ethylhexanoate, not more than 32% in diluent B.	4	§ 178.274(d)(2)	§ 178.275(d)(3)	§ 178.275(g)(1)	Not more than 90% at 59 °F (15 °C)	+15 °C	+20 °C
	tert-Butylperoxypivalate, not more than 27% in diluent type B.	4	§ 178.274(d)(2)	§ 178.275(d)(3)	§ 178.275(g)(1)	Not more than 90% at 59 °F (15 °C)	+5 °C	+10 °C
	tert-Butyl peroxy-3,5,5-trimethylhexanoate, not more than 32% in diluent type B.	4	§ 178.274(d)(2)	§ 178.275(d)(3)	§ 178.275(g)(1)	Not more than 90% at 59 °F (15 °C)	+35 °C	+40 °C

Di-(3,5,5-trimethyl-hexanoyl) peroxide, not more than 38% in diluent type A.	4	§ 178.274(d)(2)	§ 178.275(d)(3)	§ 178.275(g)(1)	Not more than 90% at 59 °F (15 °C)	0 °C	+5 °C
Peroxyacetic acid, distilled, stabilized, not more than 41%.	4	§ 178.274(d)(2)	§ 178.275(d)(3)	§ 178.275(g)(1)	Not more than 90% at 59 °F (15 °C)	+30 °C	+35 °C

(h) *Bulk packagings other than IBCs.* The following bulk packagings are authorized, subject to the conditions and limitations of this section, if the organic peroxide is listed in the Organic Peroxide Portable Tank Table and bulk packagings are authorized, or if the organic peroxide is specifically authorized for transport in a bulk packaging by this paragraph (h), and the bulk packaging conforms to the requirements of this subchapter:

(1) *Rail cars.* Class DOT 103, 104, 105, 109, 111, 112, 114, 115, or 120 fusion-weld tank car tanks are authorized. DOT 103W, 111A60F1 and 111A60W1 tank car tanks must have bottom outlets effectively sealed from inside. Gauging devices are required on DOT 103W tank car tanks. Riveted tank car tanks are not authorized.

(2) *Cargo tanks.* Specification MC 307, MC 310, MC 311, MC 312, DOT 407, and DOT 412 cargo tank motor vehicles with a tank design pressure of at least 172 kPa (25 psig) are authorized.

(3) *Portable tanks.* The following requirements apply to portable tanks intended for the transport of organic peroxides or self-reactive substances. DOT 51, 57, IM 101 portable tanks, and UN portable tanks that conform to the requirements of paragraph (g) of this section, are authorized. Type F organic peroxide or self-reactive substance formulations other than those indicated in the Organic Peroxide Portable Tank Table may be transported in portable tanks if approved by the Associate Administrator. The following conditions also apply:

(i) The portable tank must be designed for a test pressure of at least 0.4 MPa (4 bar).

(ii) The portable tank must be fitted with temperature-sensing devices.

(iii) The portable tank must be fitted with pressure relief devices and emergency-relief devices. Vacuum-relief devices may also be used. Pressure relief devices must operate at pressures determined according to both the properties of the hazardous material and the construction characteristics of the portable tank. Fusible elements are not allowed in the shell.

(iv) The pressure relief devices must consist of reclosing devices fitted to prevent significant build-up within the portable tank of the decomposition products and vapors released at a temperature of 50 °C (122 °F). The capacity and start-to-discharge pressure of the relief devices must be in accordance with the applicable requirements of this subchapter specified for the portable tank. The pressure relief devices must not allow liquid to escape in the event the portable tank is overturned in a loaded condition.

(v)(A) The emergency-relief devices may be of the reclosing or frangible types, or a combination of the two, designed to vent all the decomposition products and vapors evolved during a period of not less than one hour of complete fire engulfment as calculated by the following formula:

$$q = 70961\ F\ A^{0.82}$$

Where:
q = heat absorption (W)
A = wetted area (m^2)
F = insulation factor (−)

(B) Insulation factor (F) in the formula in paragraph (h)(3)(v)(A) of this section equals 1 for non-insulated vessels and for insulated vessels F is calculated using the following formula:

$$F = \frac{U\left(923 - T_{PO}\right)}{47032}$$

Where:
U = K/L = heat transfer coefficient of the insulation ($W \cdot m^{-2} \cdot K^{-1}$); where K = heat conductivity of insulation layer ($W \cdot m^{-1} \cdot K^{-1}$), and L = thickness of insulation layer (m).
T_{PO} = temperature of material at relieving conditions (K).

(vi) The start-to-discharge pressure of emergency-relief devices must be higher than that specified for the pressure relief devices in paragraph (h)(3)(iv) of this section. The emergency-relief devices must be sized and designed in such a way that the maximum pressure in the shell never exceeds the test pressure of the portable tank.

Note to Paragraph (h)(3)(vi): An example of a method to determine the size of emergency-relief devices is given in Appendix 5 of the UN Manual of Tests and Criteria (IBR, see § 171.7 of this subchapter). A second example of a test method for venting sizing is given in the American Institute of Chemical Engineers Process Safety Progress Journal, June 2002 issue (Vol. 21, No. 2) (Informational materials not requiring incorporation by reference, see § 171.7(b)).

(vii) For insulated portable tanks, the capacity and setting of emergency-relief devices must be determined assuming a loss of insulation from 1% of the surface area.

(viii) Vacuum-relief devices and reclosing devices on portable tanks used for flammable hazardous materials must be provided with flame arresters. Any reduction of the relief capacity caused by the flame arrester must be taken into account and the appropriate relief capacity must be provided.

(ix) Service equipment such as devices and external piping must be designed and constructed so that no hazardous material remains in them after filling the portable tank.

(x) Portable tanks may be either insulated or protected by a sun-shield. If the SADT of the hazardous material in the portable tank is 55 °C (131 °F) or less, the portable tank must be completely insulated. The outer surface must be finished in white or bright metal.

(xi) The degree of filling must not exceed 90% at 15 °C (59 °F).

(xii) DOT 57 metal portable tanks are authorized only for tert-butyl cumyl peroxide, di-(2-tert-butylperoxyisopropyl-benzene(s)), dicumyl peroxide and mixtures of two or more of these peroxides. DOT 57 portable tanks must conform to the venting requirements of paragraph (f) of this section. These portable tanks are not subject to any other requirements of paragraph (h) of this section.

(4) For tertiary butyl hydroperoxide (TBHP), each tank car, cargo tank or portable tank must contain 7.6 cm (3.0 inches) low density polyethylene (PE) saddles having a melt index of at least 0.2 grams per 10 minutes (for example see, ASTM D1238, condition E) as part of the lading, with a ratio of PE to TBHP over a range of 0.008 to 0.012 by mass. Alternatively, plastic or metal containers equipped with fusible plugs having a melting point between 69 °C (156 °F) and 71 °C (160 °F) and filled with a sufficient quantity of water to dilute the TBHP to 65% or less by mass may be used. The PE saddles must be visually inspected after each trip and, at a minimum, once every 12 months, and replaced when discoloration, fracture, severe deformation, or other indication of change is noted.

■ 43. Section 173.226 is revised to read as follows:

§ 173.226 Materials poisonous by inhalation, Division 6.1, Packing Group I, Hazard Zone A.

Division 6.1, Packing Group I, Zone A poisonous by inhalation (see § 173.133) must be packed in non-bulk packagings in accordance with the following paragraphs:

(a) In seamless specification cylinders conforming to the requirements of § 173.40.

(b) In 1A1, 1B1, 1H1, 1N1, or 6HA1 drums further packed in a 1A2 or 1H2 drum. Both inner and outer drums must conform to the performance test requirements of subpart M of part 178 of this subchapter at the Packing Group I performance level. The outer drums may be tested either as a package

intended to contain inner packagings (combination package) or as a single packaging intended to contain solids or liquids at a mass corresponding to the mass of the assembled packaging system. All outer drums, even those tested to contain inner packaging or as single packagings for solids, must withstand a hydrostatic test pressure of 100 kPa (15 psig). The outer drum must have a minimum thickness of 1.35 mm (0.053 inch) for a 1A2 outer drum or 6.3 mm (0.248 inch) for a 1H2 outer drum. In addition, the inner drum must—

(1) Be capable of satisfactorily withstanding the hydrostatic pressure test in § 178.605 of this subchapter at a test pressure of 300 kPa (45 psig);

(2) Satisfactorily withstand the leakproofness test in § 178.604 of this subchapter using an internal air pressure of at least twice the vapor pressure at 55 °C (131 °F) of the material to be packaged;

(3) Have screw-type closures that are—

(i) Closed and tightened to a torque prescribed by the closure manufacturer, using a properly calibrated device that is capable of measuring torque;

(ii) Physically held in place by any means capable of preventing back-off or loosening of the closure by impact or vibration during transportation; and

(iii) Provided with a cap seal that is properly applied in accordance with the cap seal manufacturer's recommendations and is capable of withstanding an internal pressure of at least 100 kPa (15 psig).

(4) Have a minimum thickness as follows:

(i) For a 1A1 or 1N1 drum, 1.3 mm (0.051 inch);

(ii) For a 1B1 drum, 3.9 mm (0.154 inch);

(iii) For a 1H1 drum, 3.16 mm (0.124 inch); and

(iv) For a 6HA1 drum, the plastic inner container shall be 1.58 mm (0.0622 inch) and the outer steel drum shall be 0.96 mm (0.0378 inch).

(5) Be isolated from the outer drum by a shock-mitigating, non-reactive material, which completely surrounds the inner packaging on all sides.

(c) In combination packagings, consisting of an inner packaging system and an outer packaging, as follows:

(1) Outer packagings:

Steel drum: 1A2
Aluminum drum: 1B2
Metal drum, other than steel or aluminum: 1N2
Plywood drum: 1D
Fiber drum: 1G
Plastic drum: 1H2
Steel box: 4A
Aluminum box: 4B
Natural wood box: 4C1 or 4C2
Plywood box: 4D
Reconstituted wood box: 4F
Fiberboard box: 4G
Expanded plastic box: 4H2
Solid plastic box: 4H2

(2) Inner packaging system. The inner packaging system consists of two packagings:

(i) an impact-resistant receptacle of glass, earthenware, plastic or metal securely cushioned with a non-reactive, absorbent material, and

(A) Capacity of each inner receptacle may not exceed 4 L (1 gallon).

(B) An inner receptacle that has a closure must have a closure which is physically held in place by any means capable of preventing back-off or loosening of the closure by impact or vibration during transportation.

(ii) Packed within a leak-tight packaging of metal or plastic.

(iii) This combination packaging in turn is packed within the outer packaging.

(A) The total amount of liquid contained in the outer packaging may not exceed 16 L (4 gallons).

(iv) the inner packaging system must conform to the performance test requirements of subpart M of part 178 of this subchapter, at the Packaging Group I performance level when subjected to the following tests:

(A) § 178.603—Drop Test

(B) § 178.604—Leakproofness Test

(C) § 178.605—Hydrostatic Pressure Test

(v) The inner packaging system must meet the above tests without the benefit of the outer packaging.

(vi) The leakproofness and hydrostatic pressure test may be conducted on either the inner receptacle or the outer packaging of the inner packaging system.

(vii) In addition to the requirements in § 173.226(b), the outer package must conform to the performance test requirements of subpart M of part 178 of this subchapter, at the Packaging Group I performance level as applicable for the type of package being used.

(d) If approved by the Associate Administrator, 1A1, 1B1, 1H1, 1N1, 6HA1 or 6HH1 drums described in paragraph (b) of this section may be used without being further packed in a 1A2 or 1H2 drum if the shipper loads the material, palletizes the drums, blocks and braces the drums within the transport vehicle and seals the transport vehicle used. Drums may not be stacked (double decked) within the transport vehicle. Shipments must be from one origin to one destination only without any intermediate pickup or delivery.

(e) Prior to reuse, all authorized inner drums must be leakproofness tested and marked in accordance with § 173.28 using a minimum test pressure as indicated in paragraph (b)(2) of this section.

■ 44. Section 173.227 is revised to read as follows:

§ 173.227 Materials poisonous by inhalation. Division 6.1, Packing Group I, Hazard Zone B.

(a) In packagings as authorized in § 173.226 and seamless and welded specification cylinders conforming to the requirements of § 173.40.

(b) 1A1, 1B1, 1N1 or 1H1 drum or 6HA1 composite further packed in a 1A2 or 1H2 drum. Both the inner and outer drums must conform to the performance test requirements of subpart M of part 178 of this subchapter at the Packing Group I performance level. The outer drums may be tested either as a package intended to contain inner packagings (combination package) or as a single packaging intended to contain solids or liquids at a mass corresponding to the mass of the assembled packaging system. The outer drum must have a minimum thickness of 1.35 mm (0.053 inches) for a 1A2 outer drum or 6.30 mm (0.248 inches) for a 1H2 outer drum. Outer 1A2 and 1H2 drums must withstand a hydrostatic test pressure of 100 kPa (15 psig). Capacity of the inner drum may not exceed 220 liters. In addition, the inner drum must conform to all of the following requirements:

(2) Have screw closures that are—

(i) Closed and tightened to a torque prescribed by the closure manufacturer, using a properly calibrated device that is capable of measuring torque;

(ii) Physically held in place by any means capable of preventing back-off or loosening of the closure by impact or vibration during transportation; and

(iii) Provided with a cap seal that is properly applied in accordance with the cap seal manufacturer's recommendations and is capable of withstanding an internal pressure of at least 100 kPa (15 psig).

(3) Have a minimum thickness as follows:

(i) For a 1A1 drum, 0.69 mm (0.027 inch);

(ii) For a 1B1 drum, 2.79 mm (0.110 inch);

(iii) For a 1H1 drum, 1.14 mm (0.045 inch); or

(iv) For a 6HA1 drum, the plastic inner container shall be 1.58 mm (0.0625 inch), the outer steel drum shall be 0.70 mm (0.027 inch).

(4) Be isolated from the outer drum by a shock-mitigating, non-reactive

material which completely surrounds the inner packaging on all sides.

(5) Prior to reuse, all authorized inner drums must be leakproofness tested and marked in accordance with § 173.28 using a minimum test pressure as indicated in paragraph (b)(1) of this section.

(c) 1A1, 1B1, 1H1, 1N1, 6HA1 or 6HH1 drums described in paragraph (b) of this section may be used without being further packed in a 1A2 or 1H2 drum if the shipper loads the material, blocks and braces the drums within the transport vehicle and seals the transport vehicle used. Drums may not be stacked (double decked) within the transport vehicle. Shipments must be from one origin to one destination only without any intermediate pickup or delivery.

■ 45. In § 173.249, paragraph (c) is revised to read as follows:

§ 173.249 Bromine.

* * * * *

(c) UN portable tanks conforming to tank code T22 (see § 172.102 of this subchapter) or specification IM 101 portable tanks conforming with paragraphs (d) through (f) of this section. Except when transported as a residue, the total quantity in one tank may not be less than 88% nor more than 92% of the volume of the tank.

* * * * *

■ 46. In § 173.306, paragraphs (i) and (j) are removed and a new paragraph (i) is added to read as follows:

§ 173.306 Limited quantities of compressed gases.

* * * * *

(i) *Aerosols with a capacity of less than 50 ml.* Aerosols, as defined in § 171.8 of this subchapter, with a capacity not exceeding 50 ml and with a pressure not exceeding 970 kPa (141 psig) at 55 °C (131 °F), containing no hazardous materials other than a Division 2.2 gas, are not subject to the requirements of this subchapter.

* * * * *

§ 173.307 [Amended]

■ 47. In § 173.307, paragraph (a)(5) is removed.

■ 48. Section 173.313 is added to read as follows:

§ 173.313 UN Portable Tank Table for Liquefied Compressed Gases.

The UN Portable Tank Table for Liquefied Compressed Gases is referenced in § 172.102(c)(7)(iii) of this subchapter for portable tanks that are used to transport liquefied compressed gases. The table applies to each liquefied compressed gas that is identified with Special Provision T50 in Column (7) of the § 172.101 Table. In addition to providing the UN identification number and proper shipping name, the table provides maximum allowable working pressures, bottom opening requirements, pressure relief device requirements, and degree of filling requirements for liquefied compressed gas permitted for transportation in a T50 portable tank. In the minimum test pressure column, ''small'' means a portable tank with a diameter of 1.5 meters or less when measured at the widest part of the shell, ''sunshield'' means a portable tank with a shield covering at least the upper third of the shell, ''bare'' means no sunshield or insulation is provided, and ''insulated'' means a complete cladding of sufficient thickness of insulating material necessary to provide a minimum conductance of not more than 0.67 w/m²/k. In the pressure relief requirements column, the word ''Normal'' denotes that a frangible disc as specified in § 178.276(e)(3) of this subchapter is not required.

UN PORTABLE TANK TABLE FOR LIQUEFIED COMPRESSED GASES

UN No.	Non-refrigerated liquefied compressed gases	Minimum design pressure (bar) small; bare; sunshield; insulated	Openings below liquid level	Pressure relief requirements (*See* § 178.276(e))	Maximum filling density (kg/l)
1005	Ammonia, anhydrous	29.0 25.7 22.0 19.7	Allowed	§ 178.276(e)(3)	0.53
1009	Bromotrifluoromethane or Refrigerant gas R 13B1	38.0 34.0 30.0 27.5	Allowed	Normal	1.13
1010	Butadienes, stabilized	7.5 7.0 7.0 7.0	Allowed	Normal	0.55
1011	Butane	7.0 7.0 7.0 7.0	Allowed	Normal	0.51
1012	Butylene	8.0 7.0 7.0 7.0	Allowed	Normal	0.53
1017	Chlorine	19.0 17.0 15.0 13.5	Not Allowed	§ 178.276(e)(3)	1.25
1018	Chlorodifluoromethane or Refrigerant gas R 22	26.0 24.0 21.0 19.0	Allowed	Normal	1.03
1020	Chloropentafluoroethane or Refrigerant gas R 115	23.0 20.0 18.0 16.0	Allowed	Normal	1.06

UN PORTABLE TANK TABLE FOR LIQUEFIED COMPRESSED GASES—Continued

UN No.	Non-refrigerated liquefied compressed gases	Minimum design pressure (bar) small; bare; sunshield; insulated	Openings below liquid level	Pressure relief requirements (*See* § 178.276(e))	Maximum filling density (kg/l)
1021	1-Chloro-1,2,2,2-tetrafluoroethane or Refrigerant gas R 124.	10.3 9.8 7.9 7.0	Allowed	Normal	1.2
1027	Cyclopropane	18.0 16.0 14.5 13.0	Allowed	Normal	0.53
1028	Dichlorodifluoromethane or Refrigerant gas R 12	16.0 15.0 13.0 11.5	Allowed	Normal	1.15
1029	Dichlorofluoromethane or Refrigerant gas R 21	7.0 7.0 7.0 7.0	Allowed	Normal	1.23
1030	1,1-Difluoroethane or Refrigerant gas R 152a	16.0 14.0 12.4 11.0	Allowed	Normal	0.79
1032	Dimethylamine, anhydrous	7.0 7.0 7.0 7.0	Allowed	Normal	0.59
1033	Dimethyl ether	15.5 13.8 12.0 10.6	Allowed	Normal	0.58
1036	Ethylamine	7.0 7.0 7.0 7.0	Allowed	Normal	0.61
1037	Ethyl chloride	7.0 7.0 7.0 7.0	Allowed	Normal	0.8
1040	Ethylene oxide with nitrogen up to a total pressure of 1MPa (10 bar) at 50 °C.	Only authorized in 10 bar insulated portable tanks—	Not Allowed	§ 178.276(e)(3)	0.78
1041	Ethylene oxide and carbon dioxide mixture with more than 9% but not more than 87% ethylene oxide.	See MAWP definition in § 178.276(a)	Allowed	Normal	*See* § 173.32(f)
1055	Isobutylene	8.1 7.0 7.0 7.0	Allowed	Normal	0.52
1060	Methyl acetylene and propadiene mixture, stabilized	28.0 24.5 22.0 20.0	Allowed	Normal	0.43
1061	Methylamine, anhydrous	10.8 9.6 7.8 7.0	Allowed	Normal	0.58
1062	Methyl bromide	7.0 7.0 7.0 7.0	Not Allowed	§ 178.276(e)(3)	1.51
1063	Methyl chloride *or* Refrigerant gas R 40	14.5 12.7 11.3 10.0	Allowed	Normal	0.81
1064	Methyl mercaptan	7.0 7.0 7.0 7.0	Not Allowed	§ 178.276(e)(3)	0.78

UN PORTABLE TANK TABLE FOR LIQUEFIED COMPRESSED GASES—Continued

UN No.	Non-refrigerated liquefied compressed gases	Minimum design pressure (bar) small; bare; sunshield; insulated	Openings below liquid level	Pressure relief requirements (*See* § 178.276(e))	Maximum filling density (kg/l)
1067	Dinitrogen tetroxide	7.0 7.0 7.0 7.0	Not Allowed	§ 178.276(e)(3)	1.3
1075	Petroleum gas, liquefied	See MAWP definition in § 178.276(a)	Allowed	Normal	See § 173.32(f)
1077	Propylene	28.0 24.5 22.0 20.0	Allowed	Normal	0.43
1078	Refrigerant gas, n.o.s.	See MAWP definition in § 178.276(a)	Allowed	Normal	See § 173.32(f)
1079	Sulphur dioxide	11.6 10.3 8.5 7.6	Not Allowed	§ 178.276(e)(3)	1.23
1082	Trifluorochloroethylene, stabilized *or* Refrigerant gas R 1113.	17.0 15.0 13.1 11.6	Not Allowed	§ 178.276(e)(3)	1.13
1083	Trimethylamine, anhydrous	7.0 7.0 7.0 7.0	Allowed	Normal	0.56
1085	Vinyl bromide, stabilized	7.0 7.0 7.0 7.0	Allowed	Normal	1.37
1086	Vinyl chloride, stabilized	10.6 9.3 8.0 7.0	Allowed	Normal	0.81
1087	Vinyl methyl ether, stabilized	7.0 7.0 7.0 7.0	Allowed	Normal	0.67
1581	Chloropicrin and methyl bromide mixture	7.0 7.0 7.0 7.0	Not Allowed	§ 178.276(e)(3)	1.51
1582	Chloropicrin and methyl chloride mixture	19.2 16.9 15.1 13.1	Not Allowed	§ 178.276(e)(3)	0.81
1858	Hexafluoropropylene compressed *or* Refrigerant gas R 1216.	19.2 16.9 15.1 13.1	Allowed	Normal	1.11
1912 1954	Methyl chloride and methylene chloride mixture n.o.s..	15.2 13.0 11.6 10.1	Allowed	Normal	0.811954
NA	Insecticide gases, flammable,	See MAWP definition in § 178.276(a)	Allowed	Normal	§ 173.32(f)
1958	1,2-Dichloro-1,1,2,2-tetrafluoroethane or Refrigerant gas R 114.	7.0 7.0 7.0 7.0	Allowed	Normal	1.3
1965	Hydrocarbon gas, mixture liquefied, n.o.s.	See MAWP definition in 178.276(a)	Allowed	Normal	See § 173.32(f)

UN PORTABLE TANK TABLE FOR LIQUEFIED COMPRESSED GASES—Continued

UN No.	Non-refrigerated liquefied compressed gases	Minimum design pressure (bar) small; bare; sunshield; insulated	Openings below liquid level	Pressure relief requirements (*See* § 178.276(e))	Maximum filling density (kg/l)
1969	Isobutane	8.5 7.5 7.0 7.0	Allowed	Normal	0.49
1973	Chlorodifluoromethane and chloropentafluoroethane mixture with fixed boiling point, with approximately 49% chlorodifluoromethane or Refrigerant gas R 502.	28.3 25.3 22.8 20.3	Allowed	Normal	1.05
1974	Chlorodifluorobromomethane *or* Refrigerant gas R 12B1 ...	7.4 7.0 7.0 7.0	Allowed	Normal	1.61
1976	Octafluorocyclobutane *or* Refrigerant gas RC 318	8.8 7.8 7.0 7.0	Allowed	Normal	1.34
1978	Propane	22.5 20.4 18.0 16.5	Allowed	Normal	0.42
1983	1-Chloro-2,2,2-trifluoroethane or Refrigerant gas R 133a ...	7.0 7.0 7.0 7.0	Allowed	Normal	1.18
2035	1,1,1-Trifluoroethane compressed or Refrigerant gas R 143a.	31.0 27.5 24.2 21.8	Allowed	Normal	0.76
2424	Octafluoropropane or Refrigerant gas R 218	23.1 20.8 18.6 16.6	Allowed	Normal	1.07
2517	1-Chloro-1,1-difluoroethane or Refrigerant gas R 142b	8.9 7.8 7.0 7.0	Allowed	Normal	0.99
2602	Dichlorodifluoromethane and difluoroethane azeotropic mixture with approximately 74% dichlorodifluoromethane or Refrigerant gas R 500.	20.0 18.0 16.0 14.5	Allowed	Normal	1.01
3057	Trifluoroacetyl chloride	14.6 12.9 11.3 9.9	Not allowed	§ 178.276(e)(3)	1.17
3070	Ethylene oxide and dichlorodifluoromethane mixture with not more than 12.5% ethylene oxide.	14.0 12.0 11.0 9.0	Allowed	§ 178.276(e)(3)	1.09
3153	Perfluoro (methyl vinyl ether)	14.3 13.4 11.2 10.2	Allowed	Normal	1.14
3159	1,1,1,2-Tetrafluoroethane or Refrigerant gas R 134a	17.7 15.7 13.8 12.1	Allowed	Normal	1.04
3161	Liquefied gas, flammable, n.o.s.	See MAWP definition in § 178.276(a)	Allowed	Normal	§ 173.32(f)
3163	Liquefied gas, n.o.s.	See MAWP definition in § 178.276(a)	Allowed	Normal	§ 173.32(f)

UN PORTABLE TANK TABLE FOR LIQUEFIED COMPRESSED GASES—Continued

UN No.	Non-refrigerated liquefied compressed gases	Minimum design pressure (bar) small; bare; sunshield; insulated	Openings below liquid level	Pressure relief requirements (*See* § 178.276(e))	Maximum filling density (kg/l)
3220	Pentafluoroethane or Refrigerant gas R 125	34.4 30.8 27.5 24.5	Allowed	Normal	0.95
3252	Difluoromethane or Refrigerant gas R 32	43.0 39.0 34.4 30.5	Allowed	Normal	0.78
3296	Heptafluoropropane or Refrigerant gas R 227	16.0 14.0 12.5 11.0	Allowed	Normal	1.2
3297	Ethylene oxide and chlorotetrafluoroethane mixture, with not more than 8.8% ethylene oxide.	8.1 7.0 7.0 7.0	Allowed	Normal	1.16
3298	Ethylene oxide and pentafluoroethane mixture, with not more than 7.9% ethylene oxide.	25.9 23.4 20.9 18.6	Allowed	Normal	1.02
3299	Ethylene oxide and tetrafluoroethane mixture, with not more than 5.6% ethylene oxide.	16.7 14.7 12.9 11.2	Allowed	Normal	1.03
3318	Ammonia solution, relative density less than 0.880 at 15 °C in water, with more than 50% ammonia.	See MAWP definition in § 178.276(a)	Allowed	§ 178.276(e)(3)	§ 173.32(f)
3337	Refrigerant gas R 404A	31.6 28.3 25.3 22.5	Allowed	Normal	0.84
3338	Refrigerant gas R 407A	31.3 28.1 25.1 22.4	Allowed	Normal	0.95
3339	Refrigerant gas R 407B	33.0 29.6 26.5 23.6	Allowed	Normal	0.95
3340	Refrigerant gas R 407C	29.9 26.8 23.9 21.3	Allowed	Normal	0.95

■ 49. In § 173.315, paragraph (a) introductory text is revised to read as follows:

§ 173.315 Compressed gases in cargo tanks and portable tanks.

(a) Liquefied compressed gases that are transported in UN portable tanks must be loaded and offered for transportation in accordance with the UN Portable Tank Table for Liquefied Compressed Gases in § 173.313. A liquefied compressed gas offered for transportation in a cargo tank motor vehicle or a portable tank must be prepared in accordance with this section, §§ 173.32 and 173.33 and subpart E or subpart G of part 180 of this subchapter, as applicable. For cryogenic liquids, see § 173.318. For marking requirements, see §§ 172.326 and 172.328 of this subchapter. Except for UN portable tanks, a liquefied compressed gas must be loaded and offered for transportation in accordance with the following table:

* * * * *

■ 50. In § 173.323, paragraph (b) is revised to read as follows:

§ 173.323 Ethylene oxide.

* * * * *

(b) Ethylene oxide must be packaged in one of the following:

(1) In hermetically sealed glass or metal inner packagings suitably cushioned in an outer package authorized by § 173.201(b). The maximum quantity permitted in any glass inner packaging is 100 g (3.5 ounces), and the maximum quantity permitted in any metal inner packaging is 340 g (12 ounces). After filling, each inner packaging shall be determined to be leak-tight by placing the inner packaging in a hot water bath at a temperature, and for a period of time, sufficient to ensure that an internal pressure equal to the vapor pressure of ethylene oxide at 55 °C is achieved. The total quantity in any outer packaging

shall not exceed 100 g (3.5 ounces), and the total quantity in any outer packaging containing only metal inner packagings shall not exceed 2.5 kg (5.5 pounds). Each completed package must be capable of passing all Packing Group I performance tests.

(2) In specification cylinders, as authorized for any compressed gas except acetylene. Pressurizing valves and insulation are required for cylinders over 4 L (1 gallon) capacity. Eductor tubes must be provided for cylinders over 19 L (5 gallons) capacity. Cylinders must be seamless or welded steel (not brazed) with a nominal capacity of no more than 115 L (30 gallons) and may not be liquid full below 82 °C (180 °F). Before each refilling, each cylinder must be tested for leakage at no less than 103.4 kPa (15 psig) pressure. In addition, each cylinder must be equipped with a fusible type relief device with yield temperature of 69 °C to 77 °C (157 °F to 170 °F). The capacity of the relief device and the effectiveness of the insulation must be such that the charged cylinder will not explode when tested by the method described in CGA Pamphlet C–14 or other equivalent method.

(3) In 1A1 steel drums of no more than 231 L (61 gallons) and meeting Packing Group I performance standards. The drum must be lagged of all welded construction with the inner shell having a minimum thickness of 1.7 mm (0.068 inches) and the outer shell having a minimum thickness of 2.4 mm (0.095 inches). Drums must be capable of withstanding a hydrostatic test pressure of 690 kPa (100 psig). Lagging must be of sufficient thickness so that the drum, when filled with ethylene oxide and equipped with the required pressure relief device, will not rupture when exposed to fire. The drum may not be liquid full below 85 °C (185 °F), and must be marked ''THIS END UP'' on the top head. Before each refilling, each drum must be tested for leakage at no less than 103 kPa (15 psig) pressure. Each drum must be equipped with a fusible type relief device with yield temperature of 69 °C to 77 °C (157 °F to 170 °F), and the capacity of the relief device must be such that the filled drum is capable of passing, without rupture, the test method described in CGA Pamphlet C–14 or other equivalent method.

* * * * *

■ 50a. In Appendix H to Part 173, the fifth sentence of paragraph 3. and paragraph 3.(a) are revised to read as follows:

Appendix H to Part 173—Method of Testing for Sustained Combustibility

3. * * * A suitable apparatus is shown in Figure 32.5.2.1 of the UN Manual of Test and Criteria, and the essential dimensions are given in Figures 32.5.2.1 and 32.5.2.2 of the UN Manual and Tests and Criteria. * * *

(a) *Gauge,* for checking that the height of the center of the gas jet above the top of the test portion well is 2.2 mm (*see* Figure 32.5.2.1);

* * * * *

PART 175—CARRIAGE BY AIRCRAFT

■ 51. The authority citation for part 175 continues to read as follows:

Authority: 49 U.S.C. 5101–5127; 49 CFR 1.53.

■ 52. In § 175.10, paragraphs (a)(4)(i), (a)(4)(iii), and (a)(18) are revised to read as follows:

§ 175.10 Exceptions.

(a) * * *

(4) * * *

(i) Non-radioactive medicinal and toilet articles (including aerosols) may be carried in checked or carry-on baggage. Release devices on aerosols must be protected by a cap or other suitable means to prevent inadvertent release;

* * * * *

(iii) Other aerosols in Division 2.2 with no subsidiary risk may be carried in checked baggage only. Release devices on aerosols must be protected by a cap or other suitable means to prevent inadvertent release;

* * * * *

(18) Compressed gas cylinders of Division 2.2 worn by passengers for the operation of mechanical limbs and spare cylinders of a similar size for the same purpose in sufficient quantities to ensure an adequate supply for the duration of the journey.

* * * * *

■ 53. Section 175.85 is revised by adding new paragraph (j) to read as follows:

§ 175.85 Cargo location.

* * * * *

(j) A package bearing a KEEP AWAY FROM HEAT handling marking must be protected from direct sunshine and stored in a cool and ventilated place, away from sources of heat.

PART 176—CARRIAGE BY VESSEL

■ 54. The authority citation for part 176 continues to read as follows:

Authority: 49 U.S.C. 5101–5127; 49 CFR 1.53.

■ 55. In § 176.2:

■ a. The definitions for ''Explosive article'', ''Explosive substance'' and ''Magazine'' are revised.

■ b. The term ''Transport unit'' is revised to read ''Cargo transport unit''.

■ c. In the definition ''In containers or the like'', the term ''transport unit'' is removed and the term ''cargo transport unit'' is added in its place.

The revisions and additions read as follows:

* * * * *

Cargo transport unit means a transport vehicle, a freight container or a portable tank. A *closed cargo transport unit* means a cargo transport unit in which the contents are totally enclosed by permanent structures. An *open cargo transport unit* means a cargo transport unit that is not a closed cargo transport unit. Cargo transport units with fabric sides or tops are not closed cargo transport units for the purposes of this part.

* * * * *

Explosive article means an article or device which contains one or more explosive substances. Individual explosive substances are identified in column 17 of the Dangerous Goods List in the IMDG Code.

* * * * *

Explosive substance means a solid or liquid material, or a mixture of materials, which is in itself capable by chemical reaction of producing gas at such a temperature and pressure and at such a speed as to cause damage to its surroundings. Individual explosive substances are identified in column 17 of the Dangerous Goods List in the IMDG Code.

* * * * *

In containers or the like means any clean, substantial, weatherproof box structure which can be secured to the vessel's structure, including a portable magazine or a closed cargo transport unit. Whenever this stowage is specified, stowage in deckhouses, mast lockers and oversized weatherproof packages (overpacks) is also acceptable.

* * * * *

Magazine means an enclosure designed to protect certain goods of Class 1 (explosive) materials from damage by other cargo and adverse weather conditions during loading, unloading, and when in transit; and to prevent unauthorized access. A magazine may be a fixed structure or compartment in the vessel, a closed freight container, a closed transport vehicle, or a portable magazine. Magazines may be positioned in any part of the ship conforming with the relevant provisions for Class 1 (explosive) materials contained in

Subpart G of this part provided that magazines which are fixed structures are sited so that their doors, where fitted, are easily accessible.

* * * * *

■ 56. Section 176.27 is revised to read as follows:

§ 176.27 Certificate.

(a) A carrier may not transport a hazardous material by vessel unless a certificate prepared in accordance with § 172.204 of this subchapter has been received.

(b) In the case of an import or export shipment of a hazardous material that will not be transported by rail, highway, or air, the shipper may certify on the bill of lading or other shipping paper that the hazardous material is properly classed, described, marked, packaged, and labeled according to part 172 of this subchapter or in accordance with the requirements of the IMDG Code (IBR, *see* § 171.7 of this subchapter). *See* § 171.12 of this subchapter.

(c)(1) A person responsible for packing or loading a freight container or transport vehicle with packages of hazardous materials for transportation by a manned vessel in ocean or coastwise service, must provide the vessel operator, at the time the shipment is offered for transportation by vessel, with a signed container packing certificate stating, at a minimum, that—

(i) The freight container or transport vehicle is serviceable for the materials loaded therein, contains no incompatible goods, and is properly marked, labeled or placarded, as applicable; and

(ii) When the freight container or transport vehicle contains packages, those packages have been inspected prior to loading, are properly marked, labeled or placarded, as applicable; are not damaged; and are properly secured.

(2) The certification may appear on a shipping paper or on a separate document as a statement, such as ''It is declared that the packing of the container has been carried out in accordance with the applicable provisions [of 49 CFR], [of the IMDG Code], or [of 49 CFR and the IMDG Code].''

■ 57. In § 176.63, paragraph (e) is revised to read as follows:

§ 176.63 Stowage locations.

* * * * *

(e) *Closed cargo transport unit,* for the purpose of stowage of Class 1 (explosive) materials on board a vessel, means a unit which fully encloses the contents by permanent structures and can be secured to the ship's structure, and includes a magazine. Cargo transport units with fabric sides or tops are not closed cargo transport units. Where this stowage is specified, stowage in small compartments such as deck-houses and mast lockers are acceptable alternatives. The floor of any closed cargo transport unit or compartment shall either be constructed of wood, close-boarded or so arranged that goods are stowed on sparred gratings, wooden pallets or dunnage. Provided that the necessary additional specifications are met, a closed cargo transport unit may be used for type ''A'' or ''C'' class 1 stowage or as a magazine.''

* * * * *

■ 58. In § 176.76, paragraphs (h) and (i) are revised to read as follows:

§ 176.76 Transport vehicles, freight containers, and portable tanks containing hazardous materials.

* * * * *

(h) A fumigated cargo transport unit may only be transported on board a vessel subject to the following conditions and limitations:

(1) The fumigated cargo transport unit may be placed on board a vessel only if at least 24 hours have elapsed since the unit was last fumigated;

(2) The fumigated cargo transport unit is accompanied by a document showing the date of fumigation and the type and amount of fumigant used;

(3) Prior to loading, the master is informed of the intended placement of the fumigated cargo transport unit on board the vessel and the information provided on the accompanying document;

(4) Equipment that is capable of detecting the fumigant and instructions for the equipment's use is provided on the vessel;

(5) The fumigated cargo transport unit must be stowed at least 5 m from any opening to accommodation spaces;

(6) Fumigated cargo transport units may only be transported on deck on vessels carrying more than 25 passengers; and

(7) Fumigants may not be added to cargo transport units while on board a vessel.

(i) A cargo transport unit packed or loaded with flammable gas or flammable liquid having a flashpoint below +23 °C transported on deck must be stowed ''away from'' possible sources of ignition. In the case of container ships, a distance equivalent to one container space athwartships away from possible sources of ignition applied in any direction will satisfy this requirement.

■ 59. In § 176.83:

■ a. Paragraphs (a)(5), (d), (e), (f)(1), (f)(3), (g)(1), (g)(2), (g)(3), and (l) are revised;

■ b. The headings to paragraphs (g) and (f) and the title to Table 176.83(g) are revised; and

■ c. A new paragraph (m) is added.

The revisions and additions read as follows:

§ 176.83 Segregation.

* * * * *

(a) * * *

(5) Whenever hazardous materials are stowed together, whether or not in a cargo transport unit, the segregation of such hazardous materials from others must always be in accordance with the most restrictive requirements for any of the hazardous materials concerned.

* * * * *

(d) *Segregation in cargo transport units:* Two hazardous materials for which any segregation is required may not be stowed in the same cargo transport unit.

(e) *Segregation of hazardous materials stowed as breakbulk cargo from those packed in cargo transport units:* (1) Hazardous materials stowed as breakbulk cargo must be segregated from materials packed in open cargo transport units in accordance with paragraph (c) of this section.

(2) Hazardous materials stowed as breakbulk cargo must be segregated from materials packed in closed cargo transport units in accordance with paragraph (c) of this section, except that:

(i) Where ''away from'' is required, no segregation between packages and the closed cargo transport units is required; and

(ii) Where ''separated from'' is required, the segregation between the packages and the closed cargo transport units may be the same as for ''away from''.

(f) *Segregation of cargo transport units on board container vessels:* (1) Except for hatchless container ships, this paragraph applies to segregation of cargo transport units that are carried on board container vessels, or on other types of vessels, provided these cargo spaces are properly fitted for permanent stowage of containers during transport.

* * * * *

(3) *Segregation Table.* Table § 176.83(f) sets forth the general requirements for segregation between cargo transport units on board container vessels.

* * * * *

(g) *Segregation of cargo transport units on board trailerships and trainships:* (1) The requirements of this paragraph apply to the segregation of

cargo transport units which are carried on board trailerships and trainships or in ''roll-on/roll-off'' cargo spaces.

(2) For trailerships and trainships which have spaces suitable for breakbulk cargo, containers, or any other method of stowage, the appropriate paragraph of this section applies to the relevant cargo space.

(3) *Segregation Table.* Table § 176.83(g) sets forth the general requirements for segregation between transport units on board trailerships and trainships.

Table 176.83(g).—Segregation of Cargo Transport Units on Board Trailerships and Trainships

* * * * *

(1) *Segregation of containers on board hatchless (open-top) container ships:* (1) This paragraph applies to the segregation of cargo transport units that are transported on board hatchless container ships provided that the cargo spaces are properly fitted to give permanent stowage of the cargo transport units during transport.

(2) For container ships that have both hatchless container spaces and other spaces suitable for breakbulk cargo, conventional container stowage, or any other method of stowage, the appropriate requirements of this section apply to the relevant cargo space.

(3) *Segregation Table.* Table § 176.83(l)(3) sets forth the general requirements for segregation of cargo transport units on board hatchless container ships.

(4) In Table § 176.83(l)(3), a container space means a distance of not less than 6 m (20 feet) fore and aft or not less than 2.5 m (8 feet) athwartship.

TABLE 176.83(L)(3)—SEGREGATION OF CARGO TRANSPORT UNITS ON BOARD HATCHLESS CONTAINER SHIPS

Segregation requirement	VERTICAL			HORIZONTAL						
	Closed versus closed	Closed versus open	Open versus open		Closed versus closed		Closed versus open		Open versus open	
					On deck	Under deck	On deck	Under deck	On deck	Under deck
"Away from" 1.	One on top of the other permitted.	Open on top of closed permitted.	.....	Fore and AFT.	No restriction ...	No restriction ...	No restriction ...	No restriction ...	one container space.	one container space or *one* bulkhead
	.....	Otherwise as for "Open versus open".	.....	Athwartships.	No restriction ...	No restriction ...	No restriction ...	No restriction ...	One container space.	One container space
"Separated from" 2.	.....	.....	*Not* in the same vertical line.	Fore and AFT.	One container space.	One container space or one bulkhead.	One container space.	one container space or one bulkhead.	One container space and not in or above same hold.	One bulkhead
	Not in the same vertical line.	As for "open versus open".	.....	Athwartships.	One container space.	One container space.	Two container spaces.	Two container spaces.	Two container spaces and not in or above same hold.	One bulkhead
"Separated by a complete compartment or hold from". 3.	.....	.....	.....	Fore and AFT.	One container space and not in or above same hold.	One bulkhead ..	One container space and not in or above same hold.	One bulkhead ..	Two container spaces and not in or above same hold.	Two bulkheads
	.....	.....	.....	Athwartships.	Two container spaces and not in or above same hold.	One bulkhead ..	Two container spaces and not in or above same hold.	One bulkhead ..	Tree container spaces and not in or above same hold.	Two bulkheads
"Separated longitudinally by an intervening complete compartment or hold from". 4.	Prohibited	Fore and AFT.	Minimum horizontal distance of 24 m and not in or above same hold.	One bulkhead *and* minimum horizontal distance of 24 M*.	Minimum horizontal distance of 24 m and not in or above same hold.	Two bulkheads	Minimum horizontal distance of 24 m and not in or above same hold.	Two bulkheads.		
	.....	Athwartships.	Prohibited	Prohibited	Prohibited	Prohibited	Prohibited	Prohibited.		

*Containers not less than 6 m (20 feet) from intervening bulkhead.
Note: All bulkheads and decks must be resistant to fire and liquid.

(m) *Provisions for segregation groups:* (1) For the purpose of segregation, materials having certain similar chemical properties have been grouped together in segregation groups. The segregation groups (such as ''acids'', ''chlorates'', ''permanganates'') and the entries allocated to each of these groups include the substances identified in section 3.1.4 of the IMDG Code. When column (10B) of the § 172.101 Table refers to a numbered stowage provision set forth in § 176.84(b) such as ''Stow 'away from' acids'', that particular stowage/segregation requirement applies to all the materials allocated to the respective segregation group.

(2) Not all hazardous materials falling within a segregation group are listed by name in the regulations. These materials are shipped under ''n.o.s.'' entries. Although these ''n.o.s.'' entries are not listed themselves in the above groups, the shipper must decide whether allocation under a segregation group is appropriate. Mixtures, solutions or preparations containing hazardous materials falling within a segregation group and shipped under an ''n.o.s.'' entry are also considered to fall within that segregation group.

(3) The segregation groups described above do not address materials which fall outside the classification criteria of the hazardous materials regulations although it is recognized that some non-hazardous materials have certain chemical properties similar to hazardous materials listed in the segregation groups. A shipper or the person responsible for packing the materials into a cargo transport unit who does have knowledge of the chemical properties of such non-hazardous materials may identify a relevant segregation group and apply the segregation requirements for that segregation group.

■ 60. In § 176.84, paragraph (a) is revised, in paragraph (b), Table of provisions, eleven new entries are added in appropriate numerical order and in paragraph (c)(2), three notes in the Provisions for the stowage of Class 1 (explosive) materials table are revised to read as follows: *§ 176.84 Other requirements for stowage and segregation for cargo vessels and passenger vessels.*

(a) *General.* When Column 10B of the § 172.101 Table refers to a numbered or alpha-numeric stowage provision for water shipments, the meaning and requirements of that provision are set forth in this section. Terms in quotation marks are defined in § 176.83. Other terms used in the table in this section such as ''acids'', ''chlorates'' and ''permanganates'' indicate different chemical groups referred to here as segregation groups. Materials falling within a segregation group are considered to have certain similar chemical properties and, although not exhaustive in nature, the materials belonging to each group include those substances identified in section 3.1.4 of the IMDG Code as set forth in § 176.83(m).

(b) * * *

Code	Provisions
	* * * * *
133	Stow ''separated from'' sulfur.
134	Stow ''separated from'' UN2716.
135	Stow ''Separated from'' mercury and mercury compounds.
136	Stow ''Separated from'' carbon tetrachloride.
137	For arsenic sulphides, Stow ''separated from'' acids.
138	Stow ''Separated from'' peroxides.
139	Stow ''Separated from'' mercury salts.
140	Stow ''Separated from'' UN3052 and UN3461.
141	Stow ''away from'' radioactive materials.
142	Packages in cargo transport units must be stowed so as to allow for adequate air circulation throughout the cargo.
143	Prohibited on any vessel carrying explosives (except explosives in Division 1.4, Compatibility group S).
	* * * * *

* * * * *

(c) * * *

(2) * * *

Note	Provision
	* * * * *
19E	''Away from'' explosives containing chlorates or perchlorates.
	* * * * *
22E	''Away from'' ammonium compounds and explosives containing ammonium compounds or salts.
23E	''Separated from'' Division 1.4 and ''separated longitudinally by an intervening complete compartment or hold from'' Division 1.1, 1.2, 1.3, 1.5, and 1.6 except from explosives of compatibility group J.
	* * * * *

* * * * *

■ 61. In § 176.116, paragraph (c) is revised and a new paragraph (f) is added to read as follows:

§ 176.116 General stowage conditions for Class 1 (explosive) materials.

* * * * *

(c) *Security:* All compartments, magazines, and cargo transport units containing Class 1 (explosive) materials must be locked or suitably secured in order to prevent unauthorized access.

* * * * *

(f) *Under deck stowage of Class 1 (explosive) materials allocated stowage categories 09 and 10:*

(1) These Class 1 (explosive) materials must not be stowed in the same compartment or hold with other cargo that is readily combustible (such as items packaged in straw).

(2) The position of stowage of these Class 1 (explosive) materials must be such as to maintain direct access to the hatchway by not overstowing with other cargo except for other Class 1 (explosive) materials.

(3) In all cases, all cargo within the compartment or hold, including Class 1 (explosive) materials stowed in cargo transport units, must be secured so as to eliminate the possibility of significant movement. Where an entire deck is used as a magazine, the stowage must be so arranged that the Class 1 (explosive) materials stowed therein must be removed from the ship before working any cargo in any decks above or below the space in the same hold.

§ 176.122 [Removed and Reserved]

■ 62. Section 176.122 is removed and reserved.

§ 176.124 [Removed and Reserved]

■ 63. Section 176.124 is removed and reserved.

■ 64. Section 176.128 is revised to read as follows:

§ 176.128 Magazine stowage types ''A'', ''C'' and Special Stowage.

(a) The stowage arrangements of Class 1 (explosive) substances and certain articles are subject to varying levels of containment, (except for compatibility group S substances), when stowed below deck. The levels are dependent on the hazard presented and the nature of the particular explosives involved. Columns (10A) and (10B) of the Hazardous Materials Table specify the stowage applicable to each substance or article. The different levels of containment are defined below as ''A'', ''C'' and ''Special''.

(b) *Magazine stowage type ''A''.* Magazine stowage type A is required for those substances that must be kept clear of steelwork.

(c) *Magazine stowage type ''C''.* Magazine stowage type C is required for

those substances in compatibility group A.

(d) *Special Stowage.* Special Stowage is required for Explosive substances, n.o.s. in compatibility groups G or L, and for articles in compatibility groups G, H, L and K, which are particularly hazardous.

§ 176.132 [Removed and Reserved]

■ 65. Section 176.132 is removed and reserved.

■ 66. Section 176.133 is revised to read as follows:

§ 176.133 Magazine stowage Type C.

The construction requirements for magazine stowage type C are the same as for a closed cargo transport unit in § 176.63(e). In addition, the magazine must be located as near as practicable to the centerline of the vessel and must not be closer to the vessel's side than a distance equal to one-eighth of the vessel's beam or 2.4 m (8 feet), whichever is less.

■ 67. Section 176.136 is revised to read as follows:

§ 176.136 Special stowage.

(a) Special stowage is required for certain articles presenting both explosive and chemical hazards, such as smoke or lachrymatory (compatibility group G or H), toxic (compatibility group K), or substances and articles which present a special risk (compatibility group L). Except as permitted in paragraph (c) of this section, Class 1 (explosive) materials requiring special stowage must be stowed on deck unless such stowage is impracticable and the COTP authorizes special stowage below deck. Where on deck stowage is recommended and an alternative stowage below deck is permitted by the COTP, the stowage must always be subject to special stowage.

(b) Class 1 (explosive) materials for which special stowage is required must be stowed as far away as practicable from living, accommodation, and working areas, and may not be overstowed. Closed cargo transport units in which such Class 1 (explosive) materials are stowed may not be located closer to the vessel's side than a distance equal to one-eighth of the vessel's beam or 2.4 m (8 feet), whichever is less.

(c) Class 1 (explosive) materials in compatibility groups G and H may be transported in steel magazines or in freight containers. If a freight container is used for this purpose, the floor of the freight container must be leakproof; for example, an all-metal container may be used and a fillet of cement or other material worked across the bottom of the door opening.

(d) Class 1 (explosive) materials stowed in one compartment may not be of more than one compatibility group, except the COTP may allow Class 1 (explosive) materials of compatibility groups G and H in separate steel magazines to be stowed in the same compartment, not less than 3 m (10 feet) apart.

(e) Class 1 (explosive) materials in compatibility groups K and L must be stowed in a steel magazine regardless of the stowage position in the vessel.

■ 68. In § 176.138, paragraph (a) is revised to read as follows:

§ 176.138 Deck stowage.

(a) [Reserved]

* * * * *

■ 69. In § 176.142, paragraph (a) is revised to read as follows:

§ 176.142 Hazardous materials of extreme flammability.

(a) Except as allowed by paragraph (b) of this section, certain hazardous materials of extreme flammability may not be transported in a vessel carrying Class 1 (explosive) materials. This prohibition applies to the following liquid hazardous materials:

Carbon disulfide.	UN1131 ...	Class 3
Diethylzinc	UN1366 ...	Division 4.2
Dimethylzinc ...	UN1370 ...	Division 4.2
Magnesium alkys.	UN3053 ...	Division 4.2
Methyl phosphonous di-chloride, *pyrophoric liquid*..	NA2845 ...	Division 6.1
Nickel carbonyl	UN1259 ...	Division 6.1
Pyrophoric liquid, inorganic, n.o.s..	UN3194 ...	Division 4.2
Pyrophoric liquid, organic, n.o.s..	UN2845 ...	Division 4.2
Organometallic substance, liquid, pyrophoric..	UN3392 ...	Division 4.2
Organometallic substance, liquid, pyrophoric, water-reactive..	UN3394 ...	Division 4.2

* * * * *

■ 70. In § 176.144, paragraphs (a), (b), (c) and (e) are revised to read as follows:

§ 176.144 Segregation of Class 1 (explosive) materials.

(a) Except as provided in § 176.145 of this subchapter, stowage of Class 1 (explosive) materials within the same compartment, magazine, or cargo transport unit is subject to provisions contained in table 176.144(a).

TABLE 176.144(A)—AUTHORIZED MIXED STOWAGE FOR EXPLOSIVES

[An "X" indicates that explosives in the two different compatibility groups reflected by the location of the "X" may not be stowed in the same compartment, magazine, or cargo transport unit]

Compatibility groups	A	B	C	D	E	F	G	H	J	K	L	N	S
A	.....	X	X	X	X	X	X	X	X	X	X	X	X
B	X	.....	X	X	X	X	X	X	X	X	X	X	.....
C	X	X	.....	6	6	X	1	X	X	X	X	4	.....
D	X	X	6	.....	6	X	1	X	X	X	X	4	.....
E	X	X	6	6	.....	.....	1	X	X	X	X	4	.....
F	X	X	X	X	X	X	X	X	X	X	X	X	.....
G	X	X	1	1	1	X	.....	X	X	X	X	X	.....
H	X	X	X	X	X	X	X	.....	X	X	X	X	.....
J	X	X	X	X	X	X	X	X	.....	X	X	X	.....
K	X	X	X	X	X	X	X	X	X	.....	X	X	.....
L	X	X	X	X	X	X	X	X	X	X	2	X	X
N	X	X	4	4	4	X	X	X	X	X	X	3	5
S	X	.....	.....	.....	.....	.....	.....	.....	.....	.....	X	5	.....

NOTES: 1. Explosive articles in compatibility group G, other than fireworks and those requiring special stowage, may be stowed with articles of compatibility groups C, D, and E, provided no explosive substances are carried in the same compartment, magazine or cargo transport unit.

2. Explosives in compatibility group L may only be stowed in the same compartment, magazine or cargo transport unit with identical explosives within compatibility group L.
3. Different types of articles of Division 1.6, compatibility group N, may only be transported together when it is proven that there is no additional risk of sympathetic detonation between the articles. Otherwise they must be treated as division 1.1.
4. When articles of compatibility group N are transported with articles or substances of compatibility groups C, D or E, the goods of compatibility group N must be treated as compatibility group D.
5. When articles of compatibility group N are transported together with articles or substances of compatibility group S, the entire load must be treated as compatibility group N.
6. Any combination of articles in compatibility groups C, D and E must be treated as compatibility group E. Any combination of substances in compatibility groups C and D must be treated as the most appropriate compatibility group shown in Table 2 of § 173.52 taking into account the predominant characteristics of the combined load. This overall classification code must be displayed on any label or placard on a unit load or cargo transport unit as prescribed in subpart E (Labeling) and subpart F (Placarding).

(b) Where Class 1 (explosive) materials of different compatibility groups are allowed to be stowed in the same compartment, magazine, or cargo transport unit, the stowage arrangements must conform to the most stringent requirements for the entire load.

(c) Where a mixed load of Class 1 (explosive) materials of different hazard divisions and/or stowage arrangements is carried within a compartment, magazine, or cargo transport unit, the entire load must be treated as belonging to the hazard division having the greatest hazard. (For example, if a load of Division 1.1 (explosive) materials is mixed with Division 1.3 (explosive) materials, the load is treated as a Division 1.1 (explosive) material as defined in § 173.50(b) of this subchapter and the stowage must conform to the most stringent requirements for the entire load).

* * * * *

(e) Segregation on deck: When Class 1 (explosive) materials in different compatibility groups are carried on deck, they must be stored not less than 6 m (20 feet) apart unless they are allowed under Table 176.144(a) to be stowed in the same compartment, magazine, or cargo transport unit.

* * * * *

■ 71. In § 176.146, paragraph (d)(1) is revised to read as follows:

§ 176.146 Segregation from non-hazardous materials.

* * * * *

(d) In order to avoid contamination:

(1) An explosive substance or article which has a secondary POISON hazard label must be stowed ''separated from'' all foodstuffs, except when such materials are stowed in separate closed cargo transport units, the requirements for ''away from'' segregation apply.

* * * * *

§ 176.168 [Amended]

■ 72. In § 176.168, the undesignated center heading before § 176.168 is revised to read ''CARGO TRANSPORT UNITS AND SHIPBORNE BARGES''.

■ 73. In § 176.170, a new paragraph (b) is added to read as follows:

§ 176.170 Transport of Class 1 (explosive) materials in freight containers.

* * * * *

(b) Freight containers loaded with Class 1 (explosive) materials, except for explosives in Division 1.4, must not be stowed in the outermost row of containers.

* * * * *

■ 74. In § 176.174, paragraphs (a) and (b) are revised to read as follows:

§ 176.174 Transport of Class 1 (explosive) materials in shipborne barges.

(a) Fixed magazines may be built within a shipboard barge. Freight containers may be used as magazines within a barge.

(b) Shipborne barges may be used for the carriage of all types of Class 1 (explosive) materials. When carrying Class 1 (explosive) materials requiring special stowage, the following requirements apply:

(1) Class 1 (explosive) materials in compatibility group G or H must be stowed in freight containers.

(2) Class 1 (explosive) materials in compatibility group K or L must be stowed in steel magazines.

* * * * *

§ 176.600 [Amended]

■ 75. In § 176.600, in paragraph (a), in the last sentence, the wording ''closed transport units'' is removed and the wording ''closed cargo transport units'' is added in its place.

PART 178—SPECIFICATIONS FOR PACKAGINGS

■ 76. The authority citation for part 178 continues to read as follows:

Authority: 49 U.S.C. 5101–5127; 49 CFR 1.53.

■ 77. In § 178.274, paragraph (f)(l)(v) is revised to read as follows:

§ 178.274 Specifications for UN portable tanks.

* * * * *

(f) * * *

(l) * * *

(v) The rated flow capacity of the spring loaded pressure relief devices, frangible disc or fusible elements in standard cubic meters of air per second (m^3/s). For spring loaded pressure relief device the rated flow capacity shall be determined according to ISO 4126–1 (IBR, see § 171.1 of this subchapter); and

* * * * *

■ 78. In § 178.275, paragraph (i)(2) is revised to read as follows:

§ 178.275 Specification for UN Portable Tanks intended for the transportation of liquid and solid hazardous materials.

* * * * *

(i) * * *

(2) The combined delivery capacity of the pressure relief system (taking into account the reduction of the flow when the portable tank is fitted with frangible-discs preceding spring-loaded pressure-relief devices or when the spring-loaded pressure-relief devices are provided with a device to prevent the passage of the flame), in condition of complete fire engulfment of the portable tank must be sufficient to limit the pressure in the shell to 20% above the start to discharge pressure limiting device (pressure relief device). The total required capacity of the relief devices may be determined using the formula in paragraph (i)(2)(i)(A) of this section or the table in paragraph (i)(2)(iii) of this section.

* * * * *

■ 79. In § 178.276, paragraphs (a)(4)(ii)(A), (d), and (e)(3) are revised to read as follows:

§ 178.276 Requirements for the design, construction, inspection and testing of portable tanks intended for the transportation of non-refrigerated liquefied compressed gases.

(a) * * *

(4) * * *

(ii) * * *

(A) Not less than the pressure specified for each liquefied compressed gas listed in the UN Portable Tank Table for Liquefied Compressed Gases in § 173.313; and

* * * * *

(d) *Bottom openings.* Bottom openings are prohibited on portable tanks when the UN Portable Tank Table for Liquefied Compressed Gases in § 173.313 of this subchapter indicates that bottom openings are not allowed. In

this case, there may be no openings located below the liquid level of the shell when it is filled to its maximum permissible filling limit.

(e) * * *

(3) A portable tank intended for the transportation of certain liquefied compressed gases identified in the UN Portable Tank Table for Liquefied Compressed Gases in § 173.313 of this subchapter must have a pressure relief device which conforms to the requirements of this subchapter. Unless a portable tank, in dedicated service, is fitted with a relief device constructed of materials compatible with the hazardous material, the relief device must be comprised of a frangible disc preceded by a reclosing device. The space between the frangible disc and the device must be provided with a pressure gauge or a suitable tell-tale indicator. This arrangement must facilitate the detection of disc rupture, pinholing or leakage which could cause a malfunction of the pressure relief device. The frangible disc must rupture at a nominal pressure 10% above the start-to-discharge pressure of the relief device.

* * * * *

■ 80. In § 178.602, paragraph (b) is revised to read as follows:

§ 178.602 Preparation of packagings and packages for testing.

* * * * *

(b) For the drop and stacking test, inner and single-unit receptacles other than bags must be filled to not less than 95% of maximum capacity (see § 171.8 of this subchapter) in the case of solids and not less than 98% of maximum in the case of liquids. Bags shall be filled to the maximum mass at which they may be used. The material to be transported in the packagings may be replaced by a non-hazardous material, except for chemical compatibility testing or where this would invalidate the results of the tests.

* * * * *

■ 81. In § 178.603, paragraphs (c) and (e)(2) introductory text are revised to read as follows:

§ 178.603 Drop test.

* * * * *

(c) *Special preparation of test samples for the drop test.*

(1) Testing of plastic drums, plastic jerricans, plastic boxes other than expanded polystyrene boxes, composite packagings (plastic material), and combination packagings with plastic inner packagings other than plastic bags intended to contain solids or articles must be carried out when the temperature of the test sample and its contents has been reduced to −18 °C (0 °F) or lower. Test liquids must be kept in the liquid state, if necessary, by the addition of anti-freeze. Water/anti-freeze solutions with a minimum specific gravity of 0.95 for testing at −18 °C (0 °F) or lower are considered acceptable test liquids. Test samples prepared in this way are not required to be conditioned in accordance with § 178.602(d).

* * * * *

(e) * * *

* * * * *

(2) For liquids in single packagings and for inner packagings of combination packagings, if the test is performed with water:

* * * * *

■ 82. In § 178.810, paragraph (b)(3) is revised to read as follows:

§ 178.810 Drop test.

* * * * *

(b) *Special preparation for the drop test.*

* * * * *

(3) Rigid plastic IBCs and composite IBCs with plastic inner receptacles must be conditioned for testing by reducing the temperature of the packaging and its contents to −18 °C (0 °F) or lower. Test liquids must be kept in the liquid state, if necessary, by the addition of anti-freeze. Water/anti-freeze solutions with a minimum specific gravity of 0.95 for testing at −18 °C (0 °F) or lower are considered acceptable test liquids, and may be considered equivalent to water for test purposes. IBCs conditioned in this way are not required to be conditioned in accordance with § 178.802.

* * * * *

PART 180—CONTINUING QUALIFICATION AND MAINTENANCE OF PACKAGINGS

■ 83. The authority citation for part 180 continues to read as follows:

Authority: 49 U.S.C. 5101–5127; 49 CFR 1.53.

■ 84. In § 180.350, paragraph (c) is revised to read as follows:

§ 180.350 Applicability and definitions.

* * * * *

(c) Routine maintenance of IBCs is the routine performance on:

(1) Metal, rigid plastic or composite IBCs of operations such as:

(i) Cleaning;

(ii) Removal and reinstallation or replacement of body closures (including associated gaskets), or of service equipment conforming to the original manufacturer's specifications provided that the leaktightness of the IBC is verified; or

(iii) Restoration of structural equipment not directly performing a hazardous material containment or discharge pressure retention function so as to conform to the design type (for example, the straightening of legs or lifting attachments), provided the containment function of the IBC is not affected.

(2) Plastics or textile flexible IBCs of operations, such as:

(i) Cleaning; or

(ii) Replacement of non-integral components, such as non-integral liners and closure ties, with components conforming to the original manufacturer's specification; provided that these operations do not adversely affect the containment function of the flexible IBC or alter the design type.

■ 85. In § 180.352, paragraph (d)(1)(iv) is revised and a new paragraph (d)(1)(v) is added to read as follows:

§ 180.352 Requirements for retest and inspection of IBCs.

* * * * *

(d) * * *

(1) * * *

(iv) Retests and inspections performed in accordance with paragraphs (d)(1)(i) and (ii) of this section may be used to satisfy the requirements for the 2.5 and five year periodic tests and inspections required by paragraph (b) of this section, as applicable.

(A) The County in which the routine maintenance was carried out; and

(B) The name or authorized symbol of the party performing the routine maintenance.

(v) Retests and inspections performed in accordance with paragraphs (d)(1)(i) and (ii) of this section may be used to satisfy the requirements for the 2.5 and five year periodic tests and inspections required by paragraph (b) of this section, as applicable.

(e) *Requirements applicable to routine maintenance of IBCs.* Except for routine maintenance of metal, rigid plastics and composite IBCs performed by the owner of the IBC, whose State and name or authorized symbol is durably marked on the IBC, the party performing the routine maintenance shall durably mark the IBC near the manufacturer's UN design type marking to show the following:

(1) The County in which the routine maintenance was carried out; and

(2) The name or authorized symbol of the party performing the routine maintenance.

(f) *Retest date.* The date of the most recent periodic retest must be marked as

provided in § 178.703(b) of this subchapter.

(g) *Record retention.* The owner or lessee of the IBC must keep records of periodic retests, initial and periodic inspections, and tests performed on the IBC if it has been repaired. Records must include design types and packaging specifications, test and inspection dates, name and address of test and inspection facilities, names or name of any persons conducting tests or inspections, and test or inspection specifics and results. Records must be kept for each packaging at each location where periodic tests are conducted, until such tests are successfully performed again or for at least 2.5 years from the date of the last test. These records must be made available for inspection by a representative of the Department on request.

* * * * *

Issued in Washington, DC on November 24, 2004, under authority delegated in 49 CFR part 1.

Elaine E. Joost,

Acting Deputy Administrator, Research and Special Programs Administration.

[FR Doc. 04–27087 Filed 12–17–04; 8:45 am]

BILLING CODE 4910–60–P

Federal Register

Monday,
December 20, 2004

Part III

Federal Reserve System

Home Mortgage Disclosure; Notice

FEDERAL RESERVE SYSTEM

[Regulation C; Docket No. R–1186]

Home Mortgage Disclosure

AGENCY: Board of Governors of the Federal Reserve System.

ACTION: Publication of revised formats for public disclosure of lending data.

SUMMARY: The Board is publishing revised formats for public disclosure of mortgage lending data reported pursuant to the Home Mortgage Disclosure Act and Regulation C, in light of revisions to Regulation C requiring lending institutions to report new loan pricing and other loan data. These revisions to the formats for public disclosures do not affect requirements applicable to financial institutions subject to Regulation C; the new requirements applicable to financial institutions have already taken effect (on January 1, 2004). The first year for which the new data will be reported is 2004; data from institutions are due no later than March 1, 2005, and the data will be reflected in the public disclosures scheduled to be released in the summer or fall of 2005.

DATES: The new disclosure formats set forth in this notice are expected to be used for the first time in summer or fall 2005.

FOR FURTHER INFORMATION CONTACT: Glenn Canner, Senior Adviser, Division of Research and Statistics, at (202) 452–2910; or John C. Wood or Kathleen C. Ryan, Counsel, Division of Consumer and Community Affairs, Board of Governors of the Federal Reserve System, Washington, DC 20551, at (202) 452–3667 or (202) 452–2412. For users of Telecommunications Device for the Deaf (TDD) *only,* contact (202) 263–4869.

SUPPLEMENTARY INFORMATION:

I. Background

The Home Mortgage Disclosure Act (HMDA), 12 U.S.C. 2801 *et seq.*, requires certain depository and for-profit nondepository institutions to collect, report, and publicly disclose data about applications for, and originations and purchases of, home mortgage and home improvement loans. The Board's Regulation C, 12 CFR part 203, implements HMDA. The data reported include the application date; the type, purpose, and amount of the loan or application; the date and type of action taken on the application; the location of the property to which the loan relates; the race, ethnicity, sex, and income of the applicant or borrower; the type of purchaser if the loan is sold; and the reasons for denial if the application is denied.

Pursuant to section 304(h) of HMDA, lending institutions subject to the act report data on the HMDA Loan/Application Register (HMDA–LAR) in a loan-by-loan and application-by-application form. The data are then submitted to the federal financial regulatory agencies. Sections 304 and 310 of HMDA direct the Federal Financial Institutions Examination Council (FFIEC) to edit and process the data and to produce public disclosure statements, which are sent back to the reporting institutions to be made available to the public upon request. In addition, the FFIEC sends the institutions' public disclosure statements to central depositories (such as public libraries) in each metropolitan statistical area (MSA), along with aggregate disclosures covering all reporting institutions in that MSA. Under section 304(h) of HMDA, the Board—in cooperation with the Office of the Comptroller of the Currency (OCC), the Office of Thrift Supervision (OTS), the Federal Deposit Insurance Corporation (FDIC), the National Credit Union Administration (NCUA), and the Department of Housing and Urban Development (HUD)—is directed to develop the format for the public disclosures.

The Board recently completed a review of Regulation C (see 67 FR 7222, February 15, 2002, and 67 FR 43217, June 27, 2002). Amendments to the regulation adopted as a result of the review require institutions to report new items, including a rate spread between the annual percentage rate (APR) on the loan and the yield on Treasury securities of comparable maturity; whether the loan is subject to the Home Ownership and Equity Protection Act (HOEPA); whether manufactured housing is involved; the type of lien on the property (first, subordinate, or none); and certain information about requests for preapproval. In addition, the regulation was amended to conform to changes in standards for collection of applicant data on race and ethnicity adopted by the Office of Management and Budget (OMB). The first year for which the new data will be reported is 2004; data from institutions must be submitted to the appropriate federal financial regulatory agency no later than March 1, 2005, and the data will be reflected in the public disclosures scheduled to be released in summer or fall 2005.

To facilitate public access to the new information that will be reported, in keeping with the purposes of the act, the formats for the public HMDA disclosure statements are being revised. The Board and the other regulatory agencies requested public comment on proposed formats for the revised disclosure statements (69 FR 15469, March 25, 2004). The proposed changes included revisions to some of the existing disclosure tables, deletion of one set of existing tables, and the addition of new tables. Approximately 30 comments were received. In response to the comments, some changes to the proposed disclosure table formats have been made; the Board is now publishing the table formats in final form.

The revisions to the existing tables are primarily to reflect the changes to the race and ethnicity categories adopted by OMB and the itemization of data on manufactured housing. One series of tables (Tables 6–1 through 6–6) will be deleted. The new tables reflect new data on rate spread, HOEPA status, lien status, preapproval requests, and manufactured housing.

II. Explanation of Revised Disclosure Formats

A. Revisions to Existing Tables and Series of Tables

The existing tables for each reporting financial institution are Tables 1, 2, 3, 4–1 through 4–6, 5–1 through 5–6, 6–1 through 6–6, 7–1 through 7–6, and 8–1 through 8–6, and Supplemental Tables 1 and 2. There are also aggregate versions of Tables 1 through 8–6, reflecting the aggregated data of all reporting financial institutions in each MSA. In addition, there are Aggregate Tables 9 and 10, but no versions of these tables for individual financial institutions. In each case, the same changes that are being made to the basic individual institution tables (1 through 8–6) are also being made to the aggregate and supplemental versions. For example, Table 1, Aggregate Table 1, and Supplemental Table 1 are revised in the same way.

1. Table 1 and Supplemental Table 1—Disposition of Loan Applications, by Location of Property and Type of Loan

Existing Table 1 shows action taken on loan applications (such as loan originated, application approved but not accepted, application denied), detailed by the state, county, and census tract in which a property is located. The table also shows the type of loan (government-backed 1-to-4 family home purchase loans, conventional 1-to-4 family home purchase loans, 1-to-4 family refinancings, 1-to-4 family home improvement loans, multifamily loans, and loans on 1-to-4 family non-owner-occupied property).

Institutions are required to report property location (generally MSA, state, county, and census tract) for loans on property located in MSAs in which they have home or branch offices. Therefore, for each reporting institution, Table 1 is produced for each MSA in which the institution has offices. In addition, some institutions are required by the regulations implementing the Community Reinvestment Act (12 U.S.C. 2901 *et seq.*) to report property location for all loans, no matter where the property is located, and some institutions voluntarily choose to do so. In these cases, Supplemental Table 1 is produced to reflect the same information as Table 1 for loans on property not located in MSAs where the institution has offices.

The only change proposed for Table 1 (and Aggregate Table 1 and Supplemental Table 1) was the addition of a new column G to provide separately itemized data for loan applications for manufactured housing. Existing Table 1 shows combined data covering both manufactured housing loans and 1-to-4 family housing loans. In the proposal, the revised table continued to include manufactured housing loans along with 1-to-4 family loans in columns A, B, C, and D, and the heading for these columns was changed to reflect this fact. The final changes to Table 1 are identical to the proposal.

2. Table 2 and Supplemental Table 2—Loans Purchased, by Location of Property and Type of Loan

Existing Table 2 shows loans purchased by the institution, detailed by state, county, and census tract and by type of loan, using the same loan types as in Table 1. As with Table 1, Table 2 is produced for each MSA in which the institution has offices. Supplemental Table 2 reflects the same information as Table 2, for loans on property not located in MSAs where the institution has offices.

The only changes proposed for Table 2 (and Aggregate Table 2 and Supplemental Table 2) were the same as for Table 1: the addition of a column G for manufactured housing loans and the change in the heading for columns A, B, C, and D to reflect the fact that data in those columns include manufactured housing loans. The final changes to Table 2 are identical to the proposal.

3. Table 3 Series—Loans Sold, by Type of Purchaser

Existing Table 3 shows loans sold by the institution, detailed by the race or national origin, sex, and income of the borrower; by the race/national origin and income characteristics of the census tract in which the property is located; and by the type of entity that purchased the loan (such as Fannie Mae, commercial bank, or affiliate of the institution). Table 3 is produced for each MSA in which the institution has offices. Existing Table 3 is renumbered Table 3–1; new Table 3–2 is added, as discussed later.

As proposed, the types of purchasers shown in Table 3–1 are conformed to the revised categories for type of purchaser used under the amended Regulation C. The changes include combining the commercial bank and savings institution categories; adding credit unions, mortgage banks, and finance companies to the life insurance company category; adding a new category for private securitization; and nonsubstantive terminology changes.

Also as proposed, Table 3–1 reflects the changes in borrower characteristics collected under the Regulation C revisions. The Regulation C revisions conform to standards for collection of data on race and ethnicity adopted by OMB. The OMB standards allow individuals to self-identify using more than one racial category, treat ethnicity and race as separate items of information, separate ''Asian or Pacific Islander'' into two categories (''Asian'' and ''Native Hawaiian or Other Pacific Islander,'') eliminate the category ''Other,'' and make nonsubstantive terminology changes.

The racial categories in Table 3–1 follow the new categories adopted in revised Regulation C. To reflect loans where the applicant has marked more than one minority race, a new category entitled ''2 or More Minority Races'' is added. Where the applicant chooses white and one minority race category (for example, Asian) the loan will be reflected in the data for the minority race (Asian, in this example). Ethnicity will be shown separately from race, using the categories ''Hispanic or Latino,'' ''Not Hispanic or Latino,'' ''Joint (Hispanic or Latino/ Not Hispanic or Latino),'' and ''Ethnicity Not Available'' (paralleling ''Race Not Available''). ''Joint (Hispanic or Latino/ Not Hispanic or Latino)'' applies where one joint applicant is Hispanic or Latino and the other is not, paralleling the ''Joint'' category under race which applies where one applicant is of a minority race and the other is white.

In the proposal, white was divided into ''White—Hispanic or Latino'' and ''White—Not Hispanic or Latino,'' to provide better data about lending to minorities and to provide some continuity with data generated under the existing HMDA disclosures (in that ''White—Not Hispanic or Latino'' in the proposed revised disclosures appeared to be substantially equivalent to ''White'' in the existing disclosures). For similar reasons, the proposed revised Table 3 contained a data line entitled ''Total Minority,'' consisting of data on situations where the applicant is of a minority race, of Hispanic or Latino origin, or both. In final Table 3–1, in order to keep the race and ethnicity categories more distinct, the white race category is not divided, and instead the white non-Hispanic category is shown in a new section entitled ''Minority Status,'' which is displayed separately from both the race and the ethnicity categories. ''Minority Status'' also includes a category entitled ''Others, Including Hispanic,'' which is the same as the ''Total Minority'' category in the proposal.

As proposed, the section of Table 3 detailing loans sold by sex of the borrower—users—is being deleted. The information can be derived from the institution's modified HMDA-LAR data, which are publicly available.

The section of Table 3–1 showing loans sold by income of the borrower remains unchanged. The section showing loans sold by racial/ethnic composition of census tracts and by income of census tracts also remains unchanged, except for a change affecting loans on property in the Commonwealth of Puerto Rico.

The existing public disclosure tables for MSAs in Puerto Rico contain no data in the section on racial/ethnic composition of census tracts, because in the decennial censuses up to and including 1990, this information was not collected for areas in Puerto Rico. In the 2000 census, information was collected on the racial and ethnic composition of census tracts in Puerto Rico, and Table 3 for MSAs in Puerto Rico therefore will be revised to show the data.

In addition, the census tract data from all MSAs are rolled up into national aggregates, which are not part of the public HMDA disclosures sent to central depositories, but are available from the FFIEC. In the proposal, comment was solicited on whether the national aggregate tables should include or exclude the Puerto Rico census tract data; the issue was whether inclusion of the Puerto Rico census tract data would make trend analysis at the national level more difficult. Most commenters addressing this issue stated that the advantages of inclusion of the Puerto Rico data ''more complete data ''would outweigh the disadvantages. The final national aggregate tables, accordingly, will include the Puerto Rico data.

In response to comments, new Table 3–2 is being added to show loan pricing data for loans sold. Table 3–2 shows rate spread (between the APR on the loan and the yield on Treasury securities of comparable maturity) and HOEPA status (whether the loan is subject to the Home Ownership and Equity Protection Act) for loans sold, by type of purchaser of the loan and by lien status. The rate spread is shown using the same categories (no reported pricing data; reported pricing data; ranges of rate spreads above the comparable Treasury yield; and mean and median rate spread) as in the new Table 11 and Table 12 series, discussed later.

4. Table 4 Series—Disposition of Applications, by Race, Ethnicity, Gender and Income of Applicant

The existing tables in the Table 4 series show action taken on applications for various types of loans, detailed by race/national origin of applicants and further itemized by sex of applicants, and detailed by income of applicants. There is one table for each type of loan, using the same loan types as in Table 1. Thus, Table 4–1 shows disposition of applications for government-insured and government-guaranteed home purchase loans on 1-to-4 family dwellings; Table 4–2 shows disposition of applications for conventional home purchase loans on 1-to-4 family dwellings; Table 4–3 shows disposition of applications for refinancings on 1-to-4 family dwellings; Table 4–4 shows disposition of applications for home improvement loans on 1-to-4 family dwellings; Table 4–5 shows disposition of applications for loans on multifamily dwellings; and Table 4–6 shows disposition of applications for loans on 1-to-4 family non-owner-occupied property. Each of these tables is produced for each MSA in which the institution has offices.

The changes to the tables in the Table 4 series are substantially the same as proposed, and parallel changes to Table 3 with regard to the race and ethnicity categories, as described above. In the final version of the Table 4 series, the same adjustments as in Table 3 are made to the proposed version (showing white as a single category, rather than divided into ''White—Hispanic or Latino'' and ''White—Not Hispanic or Latino,'' and instead showing the white non-Hispanic category under ''Minority Status,'' which also includes ''Others, Including Hispanic''). Within each of these categories, itemized data are also shown for Male, Female, and Joint (applying where one joint applicant is male and the other is female).

As in Table 3, the section in the Table 4 series showing action taken on applications by income of applicants remains unchanged. The titles of the tables also remain substantially unchanged. ''1-to-4 Family and Manufactured Home Dwellings'' replaces ''1-to-4 Family Homes'' in Tables 4–1, 4–2, 4–3, 4–4, and 4–6, to make clear that these tables continue to include manufactured homes along with 1-to-4 family homes. ''Ethnicity'' is added to the titles on each of the tables, since ethnicity is now treated as a separate item of data from race.

A new Table 4–7 is being added, entitled ''Disposition of Applications for Home Purchase, Home Improvement, or Refinancing Loans, Manufactured Home Dwellings, by Race, Ethnicity, Gender and Income of Applicant.'' The data shown are the same as in the other tables in the Table 4 series, as revised, except that the data relate only to manufactured home loan applications. Thus, the data in Table 4–7 will be a subset of the data in Tables 4–1, 4–2, 4–3, and 4–4. In this respect, new Table 4–7 parallels the new columns covering manufactured home loans and applications in Tables 1 and 2.

One additional change that was not proposed but responds to comments is the addition of a ''Total'' line at the end of each table in the Table 4 series, including new Table 4–7. The figures in each column of this line will show the total of all applications or loans, for the particular institution and MSA covered by the table, for the category represented by the column. For example, the total line for the first column in Table 4–7 will show total applications received for manufactured housing loans by that institution in that MSA.

5. Table 5 Series—Disposition of Applications, by Income, Race and Ethnicity of Applicant

The existing tables in the Table 5 series show action taken on applications for various types of loans, detailed by income of applicants and further itemized by race/national origin of applicants. There is one table for each type of loan, using the same loan types as in the Table 4 series; the two series of tables differ only in how the data are itemized.

The final changes are substantially the same as proposed, and mirror those made to the Table 4 series. The racial categories are changed, ethnicity placed in a separate section of data, and the table titles conformed, in the same manner as in the Table 4 series. Also paralleling the Table 4 series, a new Table 5–7 is added to show data for manufactured home loan applications, and ''Total'' lines are added at the end of each table.

6. Table 6 Series—Disposition of Applications, by Income and Gender of Applicant

The existing tables in the Table 6 series show action taken on applications for various types of loans, detailed by income of applicants and further itemized by sex of applicants. Again, there is one table for each type of loan. The Table 6 series parallels the 4 and 5 series; the only difference is in how the data are itemized.

The proposal was to eliminate the Table 6 series as redundant, on the basis that the Table 6 series is used very infrequently. Most commenters addressing this issue supported the proposal, and accordingly the Table 6 series will be eliminated. Information on lending patterns by income and by sex of loan applicants remains available in the 4 and 5 series of tables, as well as through the modified HMDA–LAR data that are also publicly available.

7. Table 7 Series—Disposition of Applications, by Characteristics of Census Tract in Which Property Is Located

The existing tables in the Table 7 series show action taken on applications, using the same types of loans as in the 4, 5, and 6 series, but in this case detailed by the racial/ethnic composition and median family income of the census tract in which the property is located.

The Table 7 series remains unchanged, except for the addition of a Table 7–7 to reflect manufactured housing loan applications and the inclusion of data from census tracts in Puerto Rico, as proposed, and the addition of a ''Total'' line as in the Table 4 and Table 5 series.

8. Table 8 Series—Reasons for Denial of Applications, by Race, Ethnicity, Gender, and Income of Applicant

The existing tables in the Table 8 series cover applications that have been denied, and show the reasons for denial detailed by the race or national origin, sex, and income of the loan applicant. As in the other series, there is one table for each type of loan, using the same loan types.

The changes made to the Table 8 series mirror those in the Tables 3, 4 and 5 series in regard to the race/ethnicity categories and inclusion of ethnicity as a separate item of data. A new Table 8–7 shows reasons for denial of manufactured housing loan applications.

9. Aggregate Table 9—Disposition of Loan Applications, by Median Age of Homes in Census Tract in Which Property Is Located and Type of Loan

Existing Aggregate Table 9 shows action taken on loan applications, by median age of homes within census tracts where the subject property is located and by type of loan. The Aggregate Table 9 for each MSA covers the aggregated data for all reporting institutions in that MSA; no Table 9 is produced for individual financial institutions.

As proposed, the changes to Aggregate Table 9 include adding a column to reflect data on manufactured home loan applications and updating the ranges of median ages of homes by ten years. A section of data covering median ages from 1990 through March 2000 is added at the beginning of the table; the section covering median ages of 1949 or earlier, at the end of the existing Aggregate Table 9, is deleted; and the range 1950–1959 in the existing table is changed to 1959 or earlier. (The updated ranges of median ages have already been put into use, for the disclosures covering 2003 lending data.)

10. Aggregate Table 10—Disposition of Loan Applications, by Principal City versus Non-Principal City Property Location and Type of Loan

Existing Aggregate Table 10 shows action taken on loan applications, by property location and by type of loan. The property location itemization consists of only two categories: central city in the given MSA, and any other location in that MSA outside the central city. No Table 10 is produced for individual financial institutions.

As proposed, the changes to Aggregate Table 10 include adding a column for data on manufactured home loan applications and substituting ''principal city'' for ''central city,'' to reflect terminology adopted by OMB.

B. New Tables and Series of Tables

A number of new tables will be produced to reflect new data items that are being collected under revised Regulation C on loan pricing (rate spread and HOEPA status), lien status, and preapproval requests. The new tables will also reflect manufactured home lending in more detail than is given in the revised existing tables.

1. Table 11 Series—Pricing Information for Loans on 1-to-4 Family Owner-Occupied Dwellings

The new Table 11 series provides loan pricing information (rate spread and HOEPA status). Under revised Regulation C, institutions must report the rate spread between the APR on the loan and the yield on Treasury securities of comparable maturity for loans subject to the Truth in Lending Act (TILA), since these loans have an APR for use in calculating the rate spread. Loans on 1-to-4 family owner-occupied homes are generally subject to TILA, and accordingly the new Table 11 series, as proposed, focuses on this category of loans. (Loans on owner-occupied manufactured homes are also generally subject to TILA, and are covered in the Table 12 series, as discussed below.)

In the proposal, the Table 11 series tables focused on conventional loans, on the basis that concern about loan pricing problems has centered on conventional, rather than government-backed, lending. Many commenters, however, urged that comparable tables be produced to show loan pricing information for government-backed lending. Accordingly, the final Table 11 series includes tables relating to Federal Housing Administration (FHA) and Veterans Administration (VA) loans.

In the proposal, the Table 11 series comprised Tables 11–1 through 11–6; the final version comprises Tables 11–1 through 11–10. The new final tables that have been added are Table 11–1 for FHA first-lien home purchase loans, Table 11–2 for VA first-lien home purchase loans, Table 11–5 for FHA first-lien refinancings, and Table 11–6 for VA first-lien refinancings. Proposed Tables 11–1, 11–2, 11–3, 11–4, 11–5, and 11–6 (covering conventional home purchase, refinancing, and home improvement loans) have been renumbered as Tables 11–3, 11–4, 11–7, 11–8, 11–9, and 11–10, respectively.

Each of the tables shows, as in the proposal, for a given reporting institution in each of the institution's MSAs, the number of such loans for which the institution did not report rate spread data because the difference between the APR on the loan and the yield on the applicable Treasury security was below the three or five percentage point reporting threshold for first-lien or subordinate-lien loans, respectively, or because no APR was available to calculate the rate spread. Each table also shows the number of such loans for which the institution did report rate spread data. The table then shows the number of loans falling into various ranges of percentage points above the applicable Treasury yield, such as 3–3.99, 4–4.99, and so on up to 8 percentage points or more above the Treasury yield for first-lien loans, and 5–5.99, 6–6.99, and so on up to 10 percentage points or more above Treasury for subordinate-lien loans. Each table also shows, for loans on which the institution reported rate spread data, the mean and median percentage points above the Treasury yield.

The final tables differ from the proposal in that they show rate spread data in terms of not only number of loans, but also dollar amount of loans, for consistency with other tables. Also, the banner heading above the columns showing ranges of rate spreads and mean and median spreads has been changed to make clear that the data shown include only loans with APRs above the applicable thresholds (3 or 5 percentage points over the comparable Treasury yields). Some commenters expressed concern that, without such clarification, some users of the data might believe that the mean and median rate spreads were calculated based on all loans made by the institution, including those with APRs below the applicable thresholds. In addition, a footnote has been added to the ''no reported pricing data'' column, to clarify the content of the data in the column.

As mentioned above, a loan will be reflected in the ''no reported pricing data'' column because the difference between the APR on the loan and the yield on the applicable Treasury security was below the reporting threshold or because no APR was available to calculate the rate spread. No APR will be available when the loan (for example, a loan for business purposes) was not subject to Regulation Z (Truth in Lending) and therefore the lender was not required to calculate and disclose an APR. Purchased loans and applications not resulting in loan originations also will not have APRs; however, these types of transactions will not be reflected in the ''no reported pricing data'' column, because the Table 11 series covers only loan originations. Also, for the 2004 data year, loans with application dates on or before December 31, 2003, will be excluded from the Table 11 series, because under the special rules for such loans, the rate spread is not required to be reported if the rate was set on or before that date. (These loans will also be excluded, for the 2004 data year, from all other tables containing loan pricing data, i.e., Tables 3–2 and 12–2 and Summary Table B.)

As in the proposal, the data in the Table 11 series are itemized by the race, ethnicity, income, and sex of the borrower, and by the racial/ethnic composition and the income of the census tract in which the property is located. The same changes to the race and ethnicity categories have been made in the Table 11 series as in the final

Tables 3, 4, 5, and 8 series, discussed above.

As in the proposal, the tables covering refinancings and home improvement loans (Tables 11–5 through 11–10 in the final version) each include an additional column showing the number (and in the final version, dollar amount) of HOEPA loans made by the institution in the particular MSA. (Under TILA, home purchase loans on 1-to-4 family owner-occupied dwellings are excluded from HOEPA coverage; thus, there is no comparable HOEPA column in final Tables 11–1 through 11–4, covering home purchase loans.) One of the triggers for HOEPA coverage is an APR 8 or more percentage points over the comparable Treasury yield for first-lien loans, and 10 or more percentage points over the comparable Treasury yield for subordinate-lien loans. Thus, for the tables with a column showing the number or dollar amount of HOEPA loans, there could be some similarity between the data in that column and the data in the column showing number or dollar amount of loans with an APR of 8 or more (or 10 or more, for subordinate-lien loans) percentage points over the comparable Treasury yield. However, there are some differences between the two columns. First, the Treasury yield for HOEPA trigger purposes is the yield as of the 15th day of the calendar month preceding the month in which the lender received the loan application; the Treasury yield for HMDA rate spread purposes is the yield as of the 15th day of a given month, if the interest rate on the loan was set on or after that day through the 14th day of the following month. Therefore, while the two yields may often be identical, they may not be in some cases. Second, a loan can be classified as a HOEPA loan even though it does not meet the APR trigger, if it meets another trigger for HOEPA coverage, based on the loan's points and fees.

2. Table 12 Series—Disposition of Applications and Pricing Information for Conventional Manufactured Home Purchase Loans, First Lien, Owner-Occupied Dwelling, by Borrower or Census Tract Characteristics

In the proposal, new Table 12 focused on manufactured home lending and showed two types of information: action taken on applications, and rate spread data for originated loans. In the final version, there are two tables, Table 12–1 which provides data on action taken, and Table 12–2 which provides rate spread data in more detail than proposed. The Table 12 series is limited, as proposed, to conventional first-lien home purchase loans on owner-occupied manufactured homes because the majority of manufactured home loan applications likely fall into this category. In addition, loans on non-owner-occupied properties are generally not subject to TILA and thus will not have an APR available for calculating rate spread.

In final Table 12–1, the action taken data are itemized by the race, ethnicity, income, and sex of the applicant, and by the racial/ethnic composition and income of the census tract where the property is located. The categories used for the applicant and census tract characteristics are identical to those used in the revised existing tables and in the new Table 11 series. Proposed Table 12 showed the data in terms of number of applications or loans; final Table 12–1 displays the data in terms of both numbers and dollar amounts, for consistency with other tables.

Table 12–1 bears some similarity to new Tables 4–7, 5–7, and 7–7, which also display action taken data relating to manufactured home lending, but there are significant differences. Tables 4–7, 5–7, and 7–7 show activity on all manufactured home lending (home purchase, home improvement, and refinancings; both conventional and government-backed; both owner-occupied and non-owner-occupied; and both first-lien and subordinate-lien), while Table 12 is limited to conventional first-lien home purchase loans on owner-occupied manufactured homes.

In the proposal, the format of the rate spread section of Table 12 was similar to the Table 11 series, except that the columns showing the numbers of loans with rate spreads falling into various ranges were omitted. Thus, the proposed rate spread section of Table 12 included columns for the number of loans with no reported pricing data, the number of loans with such data reported, and the mean and median percentage points over the applicable Treasury yield for those loans with pricing data reported. In response to comment, final Table 12–2 includes columns covering various ranges of rate spreads. The ranges are the same as in the tables in the 11 series relating to first-lien loans, except that instead of the highest range being 8 or more percentage points over the comparable Treasury yield, a range of 8–9.99 is added, and the highest range accordingly is 10 or more.

Like final Table 12–1, final Table 12–2 displays the data in terms of both numbers and dollar amounts, for consistency with other tables. Also, as in the Table 11 series, the banner heading above the columns showing ranges of rate spreads and mean and median spreads has been changed to make clear that the data shown include only loans with APRs above the applicable threshold, and a footnote has been added to the ''no reported pricing data'' column to clarify the content of the data in the column. (The content of the data in this column parallels that of the ''no reported pricing data'' column in the Table 11 series, discussed above.)

Although Table 12–2 on manufactured home loans is limited to home purchase loans, while the Table 11 series on 1-to-4 family home loans also has tables covering refinancings and home improvement loans, Summary Table B, discussed later, provides some information on rate spreads for refinancings and home improvement loans on manufactured housing.

3. Summary Table A Series—Disposition of Applications and Loan Sales by Loan Type and Disposition of Preapprovals by Borrower or Census Tract Characteristics

The new Summary Table A series provides an overview of actions taken by an institution on loan applications, including actions taken on preapproval requests, with detailed itemizations by type of loan. As in the proposal, Summary Table A–1 shows action taken on applications for loans on 1-to-4 family dwellings; Summary Table A–2 shows the same data for applications on manufactured home loans; and Summary Table A–3 shows the same data for applications relating to multifamily housing, except that it does not contain data on preapproval requests; lending on multifamily housing likely does not generally involve preapproval requests as defined in Regulation C.

The tables itemize lending by (1) loan purpose (home purchase, refinancing, and home improvement); (2) lien status (first-lien, subordinate-lien, and unsecured); (3) loan type (conventional, FHA, VA, and FSA/RHS (Farm Service Agency or Rural Housing Service)); and (4) action taken. Summary Tables A–1, A–2, and A–3 do not show itemization by applicant or census tract characteristics; tables in the 4, 5, and 7 series serve that purpose. Rather, these summary tables detail at a glance the types of lending in which an institution is engaged. (New Summary Table A–4, added in the final version and focusing on preapprovals, does contain an itemization by applicant and census tract characteristics. See below for further discussion of Summary Table A–4.)

The summary tables will be produced in two versions for each reporting institution. One version reflects activity for each MSA for which the institution reports data, and the other shows the institution's total activity nationwide. Both versions itemize data by type of action taken (such as loans originated, applications approved but not accepted, and applications denied). In addition, both versions show the number of preapproval requests that resulted in loan originations and the number of originated loans sold by the institution.

Only the nationwide version shows preapproval requests denied and preapproval requests approved but not accepted. Data on preapproval requests denied and preapproval requests approved but not accepted cannot be shown in the MSA version, because to be included in the MSA-based tables, an application must have a property location, and property location is not reported on a preapproval request unless the request goes beyond the preapproval stage, for example, where it results in a loan origination.

Summary Tables A–1, A–2, and A–3 are unchanged from the proposal, except that a footnote has been added to clarify that reporting of preapproval requests approved but not accepted is optional. Some commenters were concerned that the data might be misleading to data users who did not realize the optional nature of reporting of this item.

Summary Table A–4 was not in the proposal, but has been added in the final version to address comments suggesting that information be shown on action taken on preapproval requests, itemized by applicant and census tract characteristics. The table covers conventional first-lien home purchase loans on 1-to-4 family dwellings, and shows preapprovals resulting in originations, preapprovals approved but not accepted, and preapprovals denied, itemized by the race, ethnicity, income, and sex of the applicant and by the racial/ethnic composition and income of the census tract in which the property is located. The categories used for the applicant and census tract characteristics are identical to those used in the revised existing tables and in the new Tables 11 and 12 series.

As in the case of Summary Tables A–1, A–2, and A–3, Summary Table A–4 will be produced in two versions for each reporting institution, one version reflecting activity for each MSA for which the institution reports data and the other showing the institution's total activity nationwide. However, only the nationwide version shows preapproval requests denied and preapproval requests approved but not accepted, for the same reason as discussed above with regard to the other summary tables.

4. Summary Table B—Loan Pricing Information for Conventional Loans by Incidence and Level

New Summary Table B shows rate spread and HOEPA status information for an institution as a whole, itemized in a manner similar to the Summary Table A series (by home purchase, refinancing, and home improvement; and by first-lien and subordinate-lien status). Summary Table B covers conventional loans on 1-to-4 family owner-occupied dwellings and on manufactured housing owner-occupied dwellings (shown in separate sections of the table). Summary Table B does not contain data on multifamily housing loans or on unsecured home improvement loans, because rate spread and HOEPA status data are not available for such loans.

Like the Summary Table A series, Summary Table B will be produced in two versions for each reporting institution, one version reflecting the activity of that institution for each MSA for which the institution reports data, and another version showing the institution's total activity nationwide.

Summary Table B is unchanged from the proposed version, except that a footnote has been added to the ''no pricing reported'' data and explanatory text has been added to the mean and median rate spread data, in both cases to clarify the content of the data, as has been done in other tables containing loan pricing data. (The content of the ''no pricing reported'' data parallels that of the ''no reported pricing data'' column in the Table 11 series, discussed above.)

Summary Table B shows data that in some respects are comparable to data shown in the Tables 11 and 12 series. Both the Table 11 series and the first section of Summary Table B display loan pricing information on 1-to-4 family dwellings. For example, Table 11–3 shows rate spread data for conventional first-lien home purchase loans on owner-occupied 1-to-4 family dwellings; the first column of the first section in Summary Table B shows the same type of data. Table 11–4 provides rate spread data on conventional subordinate-lien home purchase loans on owner-occupied 1-to-4 family dwellings, as does the second column of the first section in Summary Table B. There are differences, however. First, the tables in the Table 11 series do not show the total number of loans for the institution, but instead provide itemizations by borrower and census tract characteristics. Summary Table B provides total loan numbers (in various categories of pricing information, such as no pricing reported, pricing reported, and so on), both at the MSA level and in total activity nationwide, but no itemization by borrower and census tract characteristics. In addition, the nationwide version of Summary Table B includes loans for which no property location was reported (for example, because the property is located outside the MSAs in which the institution has offices), while the Table 11 series does not include such loans. Thus, a data user could use Summary Table B to determine at a glance the overall level of an institution's loan pricing, detailed by loan type.

The second section of Summary Table B and Table 12–2 both provide loan pricing data for manufactured housing, but again, there are differences. First, Summary Table B shows total numbers of loans for an institution (in various categories of pricing information) both at the MSA level and nationwide, but does not include an itemization by borrower or census tract characteristics; Table 12–2 includes the itemization but not the totals. In addition, Table 12–2 provides data only on first-lien home purchase loans on manufactured housing, while Summary Table B also provides data on subordinate-lien home purchase loans, first- and subordinate-lien refinancings, and first- and subordinate-lien home improvement loans, as well as HOEPA status for the refinancings and home improvement loans.

Text of Proposed Revisions

For the reasons set forth in the preamble, the Board adopts revised formats for public disclosure of mortgage lending data under the Home Mortgage Disclosure Act, as set forth in the attachment to this document.

By order of the Board of Governors of the Federal Reserve System, December 10, 2004.

Jennifer J. Johnson,

Secretary of the Board.

BILLING CODE 6210–01–P

TABLE 1: DISPOSITION OF LOAN APPLICATIONS, BY LOCATION OF PROPERTY AND TYPE OF LOAN, 2004

PAGE: 9999
RUN DATE: MM/DD/CCYY

INSTITUTION: XXXXXXXXXX-X XXXXXXXXXXXXXXXXXXXXXXXXXXXX

MSA/MD: 99999 - XXXXXXXXXXXXXXXXXXXXXXXXXXXXXXXXXXXXXX

SECTION 1 -- PROPERTY LOCATED IN MSA/MD WHERE INSTITUTION HAS A HOME OR BRANCH OFFICE

CENSUS TRACT OR COUNTY NAME AND DISPOSITION OF APPLICATION 1/	LOANS ON 1-TO-4 FAMILY AND MANUFACTURED HOME DWELLINGS								LOANS ON DWELLINGS FOR 5 OR MORE FAMILIES		NONOCCUPANT LOANS FROM COLUMNS A, B, C AND D		LOANS ON MANUFACTURED HOME DWELLINGS FROM COLUMNS A,B,C AND D	
	HOME PURCHASE LOANS				REFINANCINGS		HOME IMPROVEMENT LOANS							
	FHA, FSA/RHS & VA		CONVENTIONAL											
	A		B		C		D		E		F		G	
(STATE/COUNTY/TRACT NUMBER)	NUMBER	AMOUNTS ($000'S)	NUMBER	AMOUNTS ($000'S)	NUMBER	AMOUNTS ($000'S)	NUMBER	AMOUNTS ($000'S)	NUMBER	AMOUNTS ($000'S)	NUMBER	AMOUNTS ($000'S)	NUMBER	AMOUNTS ($000'S)
GA/HENRY /0703.00														
LOANS ORIGINATED	99999999	99999999	99999999	99999999	99999999	99999999	99999999	99999999	99999999	99999999	99999999	99999999	99999999	99999999
APPLICAT'N APPROVED, NOT ACCEPTED	99999999	99999999	99999999	99999999	99999999	99999999	99999999	99999999	99999999	99999999	99999999	99999999	99999999	99999999
APPLICATIONS DENIED	99999999	99999999	99999999	99999999	99999999	99999999	99999999	99999999	99999999	99999999	99999999	99999999	99999999	99999999
APPLICATIONS WITHDRAWN	99999999	99999999	99999999	99999999	99999999	99999999	99999999	99999999	99999999	99999999	99999999	99999999	99999999	99999999
FILES CLOSED FOR INCOMPLETENESS	99999999	99999999	99999999	99999999	99999999	99999999	99999999	99999999	99999999	99999999	99999999	99999999	99999999	99999999
GA/DOUGLAS /0801.00														
LOANS ORIGINATED	99999999	99999999	99999999	99999999	99999999	99999999	99999999	99999999	99999999	99999999	99999999	99999999	99999999	99999999
APPLICAT'N APPROVED, NOT ACCEPTED	99999999	99999999	99999999	99999999	99999999	99999999	99999999	99999999	99999999	99999999	99999999	99999999	99999999	99999999
APPLICATIONS DENIED	99999999	99999999	99999999	99999999	99999999	99999999	99999999	99999999	99999999	99999999	99999999	99999999	99999999	99999999
APPLICATIONS WITHDRAWN	99999999	99999999	99999999	99999999	99999999	99999999	99999999	99999999	99999999	99999999	99999999	99999999	99999999	99999999
FILES CLOSED FOR INCOMPLETENESS	99999999	99999999	99999999	99999999	99999999	99999999	99999999	99999999	99999999	99999999	99999999	99999999	99999999	99999999
GA/CHEROKEE /0901.00														
LOANS ORIGINATED	99999999	99999999	99999999	99999999	99999999	99999999	99999999	99999999	99999999	99999999	99999999	99999999	99999999	99999999
APPLICAT'N APPROVED, NOT ACCEPTED	99999999	99999999	99999999	99999999	99999999	99999999	99999999	99999999	99999999	99999999	99999999	99999999	99999999	99999999
APPLICATIONS DENIED	99999999	99999999	99999999	99999999	99999999	99999999	99999999	99999999	99999999	99999999	99999999	99999999	99999999	99999999
APPLICATIONS WITHDRAWN	99999999	99999999	99999999	99999999	99999999	99999999	99999999	99999999	99999999	99999999	99999999	99999999	99999999	99999999
FILES CLOSED FOR INCOMPLETENESS	99999999	99999999	99999999	99999999	99999999	99999999	99999999	99999999	99999999	99999999	99999999	99999999	99999999	99999999
GA/NEWTON /1001.00														
LOANS ORIGINATED	99999999	99999999	99999999	99999999	99999999	99999999	99999999	99999999	99999999	99999999	99999999	99999999	99999999	99999999
APPLICAT'N APPROVED, NOT ACCEPTED	99999999	99999999	99999999	99999999	99999999	99999999	99999999	99999999	99999999	99999999	99999999	99999999	99999999	99999999
APPLICATIONS DENIED	99999999	99999999	99999999	99999999	99999999	99999999	99999999	99999999	99999999	99999999	99999999	99999999	99999999	99999999
APPLICATIONS WITHDRAWN	99999999	99999999	99999999	99999999	99999999	99999999	99999999	99999999	99999999	99999999	99999999	99999999	99999999	99999999
FILES CLOSED FOR INCOMPLETENESS	99999999	99999999	99999999	99999999	99999999	99999999	99999999	99999999	99999999	99999999	99999999	99999999	99999999	99999999
GA/FAYETTE /SMALL														
LOANS ORIGINATED	99999999	99999999	99999999	99999999	99999999	99999999	99999999	99999999	99999999	99999999	99999999	99999999	99999999	99999999
APPLICAT'N APPROVED, NOT ACCEPTED	99999999	99999999	99999999	99999999	99999999	99999999	99999999	99999999	99999999	99999999	99999999	99999999	99999999	99999999
APPLICATIONS DENIED	99999999	99999999	99999999	99999999	99999999	99999999	99999999	99999999	99999999	99999999	99999999	99999999	99999999	99999999
APPLICATIONS WITHDRAWN	99999999	99999999	99999999	99999999	99999999	99999999	99999999	99999999	99999999	99999999	99999999	99999999	99999999	99999999
FILES CLOSED FOR INCOMPLETENESS	99999999	99999999	99999999	99999999	99999999	99999999	99999999	99999999	99999999	99999999	99999999	99999999	99999999	99999999

TABLE 1: DISPOSITION OF LOAN APPLICATIONS, BY LOCATION OF PROPERTY AND TYPE OF LOAN, 2004

PAGE: 9999
RUN DATE: MM/DD/CCYY

INSTITUTION: XXXXXXXXXX-X XXXXXXXXXXXXXXXXXXXXXXXXXXXX

MSA/MD: 99999 - XXXXXXXXXXXXXXXXXXXXXXXXXXXXXXXXXXXXXXXX

SECTION 1 -- PROPERTY LOCATED IN MSA/MD WHERE INSTITUTION HAS A HOME OR BRANCH OFFICE

DISPOSITION OF APPLICATIONS	LOANS ON 1-TO-4 FAMILY AND MANUFACTURED HOME DWELLINGS								LOANS ON DWELLINGS FOR 5 OR MORE FAMILIES		NONOCCUPANT LOANS FROM COLUMNS A, B, C AND D		LOANS ON MANUFACTURED HOME DWELLINGS FROM COLUMNS A,B,C AND D	
	HOME PURCHASE LOANS				REFINANCINGS		HOME IMPROVEMENT LOANS							
	FHA, FSA/RHS & VA		CONVENTIONAL											
	A		B		C		D		E		F		G	
	NUMBER	AMOUNTS ($000'S)	NUMBER	AMOUNTS ($000'S)	NUMBER	AMOUNTS ($000'S)	NUMBER	AMOUNTS ($000'S)	NUMBER	AMOUNTS ($000'S)	NUMBER	AMOUNTS ($000'S)	NUMBER	AMOUNTS ($000'S)
MSA/MD TOTAL														
LOANS ORIGINATED	99999999	99999999	99999999	99999999	99999999	99999999	99999999	99999999	99999999	99999999	99999999	99999999	99999999	99999999
APPLICAT'N APPROVED, NOT ACCEPTED	99999999	99999999	99999999	99999999	99999999	99999999	99999999	99999999	99999999	99999999	99999999	99999999	99999999	99999999
APPLICATIONS DENIED	99999999	99999999	99999999	99999999	99999999	99999999	99999999	99999999	99999999	99999999	99999999	99999999	99999999	99999999
APPLICATIONS WITHDRAWN	99999999	99999999	99999999	99999999	99999999	99999999	99999999	99999999	99999999	99999999	99999999	99999999	99999999	99999999
FILES CLOSED FOR INCOMPLETENESS	99999999	99999999	99999999	99999999	99999999	99999999	99999999	99999999	99999999	99999999	99999999	99999999	99999999	99999999
INVALID GEOGRAPHIC IDENTIFIERS 2/														
LOANS ORIGINATED	99999999	99999999	99999999	99999999	99999999	99999999	99999999	99999999	99999999	99999999	99999999	99999999	99999999	99999999
APPLICAT'N APPROVED, NOT ACCEPTED	99999999	99999999	99999999	99999999	99999999	99999999	99999999	99999999	99999999	99999999	99999999	99999999	99999999	99999999
APPLICATIONS DENIED	99999999	99999999	99999999	99999999	99999999	99999999	99999999	99999999	99999999	99999999	99999999	99999999	99999999	99999999
APPLICATIONS WITHDRAWN	99999999	99999999	99999999	99999999	99999999	99999999	99999999	99999999	99999999	99999999	99999999	99999999	99999999	99999999
FILES CLOSED FOR INCOMPLETENESS	99999999	99999999	99999999	99999999	99999999	99999999	99999999	99999999	99999999	99999999	99999999	99999999	99999999	99999999

SECTION 2 -- PROPERTY NOT LOCATED IN MSA/MDS WHERE INSTITUTION HAS HOME OR BRANCH OFFICES

LOANS ORIGINATED	99999999	99999999	99999999	99999999	99999999	99999999	99999999	99999999	99999999	99999999	99999999	99999999	99999999	99999999
APPLICAT'N APPROVED, NOT ACCEPTED	99999999	99999999	99999999	99999999	99999999	99999999	99999999	99999999	99999999	99999999	99999999	99999999	99999999	99999999
APPLICATIONS DENIED	99999999	99999999	99999999	99999999	99999999	99999999	99999999	99999999	99999999	99999999	99999999	99999999	99999999	99999999
APPLICATIONS WITHDRAWN	99999999	99999999	99999999	99999999	99999999	99999999	99999999	99999999	99999999	99999999	99999999	99999999	99999999	99999999
FILES CLOSED FOR INCOMPLETENESS	99999999	99999999	99999999	99999999	99999999	99999999	99999999	99999999	99999999	99999999	99999999	99999999	99999999	99999999
INVALID MSA/MD NUMBER 2/														
LOANS ORIGINATED	99999999	99999999	99999999	99999999	99999999	99999999	99999999	99999999	99999999	99999999	99999999	99999999	99999999	99999999
APPLICAT'N APPROVED, NOT ACCEPTED	99999999	99999999	99999999	99999999	99999999	99999999	99999999	99999999	99999999	99999999	99999999	99999999	99999999	99999999
APPLICATIONS DENIED	99999999	99999999	99999999	99999999	99999999	99999999	99999999	99999999	99999999	99999999	99999999	99999999	99999999	99999999
APPLICATIONS WITHDRAWN	99999999	99999999	99999999	99999999	99999999	99999999	99999999	99999999	99999999	99999999	99999999	99999999	99999999	99999999
FILES CLOSED FOR INCOMPLETENESS	99999999	99999999	99999999	99999999	99999999	99999999	99999999	99999999	99999999	99999999	99999999	99999999	99999999	99999999

AGGREGATE TABLE 1: DISPOSITION OF LOAN APPLICATIONS, BY LOCATION OF PROPERTY AND TYPE OF LOAN, 2004

PAGE: 9999
RUN DATE: MM/DD/CCYY

MSA/MD: 99999 - XXXXXXXXXXXXXXXXXXXXXXXXXXXXXXXXXXXXXXXX

ALL LOANS ON PROPERTY LOCATED IN MSA/MD 3/

CENSUS TRACT OR COUNTY NAME AND DISPOSITION OF APPLICATION 1/	LOANS ON 1-TO-4 FAMILY AND MANUFACTURED HOME DWELLINGS								LOANS ON DWELLINGS FOR 5 OR MORE FAMILIES		NONOCCUPANT LOANS FROM COLUMNS A, B, C AND D		LOANS ON MANUFACTURED HOME DWELLINGS FROM COLUMNS A,B,C AND D		% MIN POP 4/	MEDIAN INCOME AS PCT OF MSA/MD MEDIAN
	HOME PURCHASE LOANS				REFINANCINGS		HOME IMPROVEMENT LOANS									
	FHA, FSA/RHS & VA A		CONVENTIONAL B		C		D		E		F		G			
(STATE/COUNTY/TRACT NUMBER)	NUMBER	AMOUNTS ($000'S)	NUMBER	AMOUNTS ($000'S)	NUMBER	AMOUNTS ($000'S)	NUMBER	AMOUNTS ($000'S)	NUMBER	AMOUNTS ($000'S)	NUMBER	AMOUNTS ($000'S)				
GA/HENRY /0703.00															999	999
LOANS ORIGINATED	99999999	99999999	99999999	99999999	99999999	99999999	99999999	99999999	99999999	99999999	99999999	99999999	99999999	99999999		
APPLICAT'N APPROVED, NOT ACCEPTED	99999999	99999999	99999999	99999999	99999999	99999999	99999999	99999999	99999999	99999999	99999999	99999999	99999999	99999999		
APPLICATIONS DENIED	99999999	99999999	99999999	99999999	99999999	99999999	99999999	99999999	99999999	99999999	99999999	99999999	99999999	99999999		
APPLICATIONS WITHDRAWN	99999999	99999999	99999999	99999999	99999999	99999999	99999999	99999999	99999999	99999999	99999999	99999999	99999999	99999999		
FILES CLOSED FOR INCOMPLETENESS	99999999	99999999	99999999	99999999	99999999	99999999	99999999	99999999	99999999	99999999	99999999	99999999	99999999	99999999		

SUPPLEMENTAL TABLE 1: DISPOSITION OF LOAN APPLICATIONS, BY LOCATION OF PROPERTY AND TYPE OF LOAN, 2004

PAGE: 9999
RUN DATE: MM/DD/CCYY

INSTITUTION: XXXXXXXXXX-X XXXXXXXXXXXXXXXXXXXXXXXXXXXXXX

SECTION 2 -- PROPERTY NOT LOCATED IN MSA/MDS WHERE INSTITUTION HAS HOME OR BRANCH OFFICES

CENSUS TRACT, COUNTY NAME OR STATE AND DISPOSITION OF APPLICATION 1/	LOANS ON 1-TO-4 FAMILY AND MANUFACTURED HOME DWELLINGS								LOANS ON DWELLINGS FOR 5 OR MORE FAMILIES		NONOCCUPANT LOANS FROM COLUMNS A, B, C AND D		LOANS ON MANUFACTURED HOME DWELLINGS FROM COLUMNS A,B,C AND D	
	HOME PURCHASE LOANS				REFINANCINGS		HOME IMPROVEMENT LOANS							
	FHA, FSA/RHS & VA		CONVENTIONAL											
	A		B		C		D		E		F		G	
(STATE/COUNTY/TRACT NUMBER) 26/27/	NUMBER	AMOUNTS ($000'S)	NUMBER	AMOUNTS ($000'S)	NUMBER	AMOUNTS ($000'S)	NUMBER	AMOUNTS ($000'S)	NUMBER	AMOUNTS ($000'S)	NUMBER	AMOUNTS ($000'S)	NUMBER	AMOUNTS ($000'S)
GA/CLARKE /0015.02														
LOANS ORIGINATED	99999999	99999999	99999999	99999999	99999999	99999999	99999999	99999999	99999999	99999999	99999999	99999999	99999999	99999999
APPLICAT'N APPROVED, NOT ACCEPTED	99999999	99999999	99999999	99999999	99999999	99999999	99999999	99999999	99999999	99999999	99999999	99999999	99999999	99999999
APPLICATIONS DENIED	99999999	99999999	99999999	99999999	99999999	99999999	99999999	99999999	99999999	99999999	99999999	99999999	99999999	99999999
APPLICATIONS WITHDRAWN	99999999	99999999	99999999	99999999	99999999	99999999	99999999	99999999	99999999	99999999	99999999	99999999	99999999	99999999
FILES CLOSED FOR INCOMPLETENESS	99999999	99999999	99999999	99999999	99999999	99999999	99999999	99999999	99999999	99999999	99999999	99999999	99999999	99999999
GA/CLARKE /TRACT UNKNOWN														
LOANS ORIGINATED	99999999	99999999	99999999	99999999	99999999	99999999	99999999	99999999	99999999	99999999	99999999	99999999	99999999	99999999
APPLICAT'N APPROVED, NOT ACCEPTED	99999999	99999999	99999999	99999999	99999999	99999999	99999999	99999999	99999999	99999999	99999999	99999999	99999999	99999999
APPLICATIONS DENIED	99999999	99999999	99999999	99999999	99999999	99999999	99999999	99999999	99999999	99999999	99999999	99999999	99999999	99999999
APPLICATIONS WITHDRAWN	99999999	99999999	99999999	99999999	99999999	99999999	99999999	99999999	99999999	99999999	99999999	99999999	99999999	99999999
FILES CLOSED FOR INCOMPLETENESS	99999999	99999999	99999999	99999999	99999999	99999999	99999999	99999999	99999999	99999999	99999999	99999999	99999999	99999999
GA/CLARKE /COUNTY TOTAL														
LOANS ORIGINATED	99999999	99999999	99999999	99999999	99999999	99999999	99999999	99999999	99999999	99999999	99999999	99999999	99999999	99999999
APPLICAT'N APPROVED, NOT ACCEPTED	99999999	99999999	99999999	99999999	99999999	99999999	99999999	99999999	99999999	99999999	99999999	99999999	99999999	99999999
APPLICATIONS DENIED	99999999	99999999	99999999	99999999	99999999	99999999	99999999	99999999	99999999	99999999	99999999	99999999	99999999	99999999
APPLICATIONS WITHDRAWN	99999999	99999999	99999999	99999999	99999999	99999999	99999999	99999999	99999999	99999999	99999999	99999999	99999999	99999999
FILES CLOSED FOR INCOMPLETENESS	99999999	99999999	99999999	99999999	99999999	99999999	99999999	99999999	99999999	99999999	99999999	99999999	99999999	99999999
GA/MADISON /SMALL														
LOANS ORIGINATED	99999999	99999999	99999999	99999999	99999999	99999999	99999999	99999999	99999999	99999999	99999999	99999999	99999999	99999999
APPLICAT'N APPROVED, NOT ACCEPTED	99999999	99999999	99999999	99999999	99999999	99999999	99999999	99999999	99999999	99999999	99999999	99999999	99999999	99999999
APPLICATIONS DENIED	99999999	99999999	99999999	99999999	99999999	99999999	99999999	99999999	99999999	99999999	99999999	99999999	99999999	99999999
APPLICATIONS WITHDRAWN	99999999	99999999	99999999	99999999	99999999	99999999	99999999	99999999	99999999	99999999	99999999	99999999	99999999	99999999
FILES CLOSED FOR INCOMPLETENESS	99999999	99999999	99999999	99999999	99999999	99999999	99999999	99999999	99999999	99999999	99999999	99999999	99999999	99999999
GA/MADISON /COUNTY TOTAL														
LOANS ORIGINATED	99999999	99999999	99999999	99999999	99999999	99999999	99999999	99999999	99999999	99999999	99999999	99999999	99999999	99999999
APPLICAT'N APPROVED, NOT ACCEPTED	99999999	99999999	99999999	99999999	99999999	99999999	99999999	99999999	99999999	99999999	99999999	99999999	99999999	99999999
APPLICATIONS DENIED	99999999	99999999	99999999	99999999	99999999	99999999	99999999	99999999	99999999	99999999	99999999	99999999	99999999	99999999
APPLICATIONS WITHDRAWN	99999999	99999999	99999999	99999999	99999999	99999999	99999999	99999999	99999999	99999999	99999999	99999999	99999999	99999999
FILES CLOSED FOR INCOMPLETENESS	99999999	99999999	99999999	99999999	99999999	99999999	99999999	99999999	99999999	99999999	99999999	99999999	99999999	99999999

SUPPLEMENTAL TABLE 1: DISPOSITION OF LOAN APPLICATIONS, BY LOCATION OF PROPERTY AND TYPE OF LOAN, 2004

PAGE: 9999
RUN DATE: MM/DD/CCYY

INSTITUTION: XXXXXXXXXX-X XXXXXXXXXXXXXXXXXXXXXXXXXXXXX

SECTION 2 -- PROPERTY NOT LOCATED IN MSA/MDS WHERE INSTITUTION HAS HOME OR BRANCH OFFICES

CENSUS TRACT, COUNTY NAME OR STATE AND DISPOSITION OF APPLICATION 1/	LOANS ON 1-TO-4 FAMILY AND MANUFACTURED HOME DWELLINGS								LOANS ON DWELLINGS FOR 5 OR MORE FAMILIES		NONOCCUPANT LOANS FROM COLUMNS A, B, C AND D		LOANS ON MANUFACTURED HOME DWELLINGS FROM COLUMNS A,B,C AND D	
	HOME PURCHASE LOANS				REFINANCINGS		HOME IMPROVEMENT LOANS							
	FHA, FSA/RHS & VA		CONVENTIONAL											
	A		B		C		D		E		F		G	
(STATE/COUNTY/TRACT NUMBER) 26/27/	NUMBER	AMOUNTS ($000'S)	NUMBER	AMOUNTS ($000'S)	NUMBER	AMOUNTS ($000'S)	NUMBER	AMOUNTS ($000'S)	NUMBER	AMOUNTS ($000'S)	NUMBER	AMOUNTS ($000'S)	NUMBER	AMOUNTS ($000'S)
GA/COUNTY UNKNOWN														
LOANS ORIGINATED	99999999	99999999	99999999	99999999	99999999	99999999	99999999	99999999	99999999	99999999	99999999	99999999	99999999	99999999
APPLICAT'N APPROVED, NOT ACCEPTED	99999999	99999999	99999999	99999999	99999999	99999999	99999999	99999999	99999999	99999999	99999999	99999999	99999999	99999999
APPLICATIONS DENIED	99999999	99999999	99999999	99999999	99999999	99999999	99999999	99999999	99999999	99999999	99999999	99999999	99999999	99999999
APPLICATIONS WITHDRAWN	99999999	99999999	99999999	99999999	99999999	99999999	99999999	99999999	99999999	99999999	99999999	99999999	99999999	99999999
FILES CLOSED FOR INCOMPLETENESS	99999999	99999999	99999999	99999999	99999999	99999999	99999999	99999999	99999999	99999999	99999999	99999999	99999999	99999999
GA/STATE TOTAL														
LOANS ORIGINATED	99999999	99999999	99999999	99999999	99999999	99999999	99999999	99999999	99999999	99999999	99999999	99999999	99999999	99999999
APPLICAT'N APPROVED, NOT ACCEPTED	99999999	99999999	99999999	99999999	99999999	99999999	99999999	99999999	99999999	99999999	99999999	99999999	99999999	99999999
APPLICATIONS DENIED	99999999	99999999	99999999	99999999	99999999	99999999	99999999	99999999	99999999	99999999	99999999	99999999	99999999	99999999
APPLICATIONS WITHDRAWN	99999999	99999999	99999999	99999999	99999999	99999999	99999999	99999999	99999999	99999999	99999999	99999999	99999999	99999999
FILES CLOSED FOR INCOMPLETENESS	99999999	99999999	99999999	99999999	99999999	99999999	99999999	99999999	99999999	99999999	99999999	99999999	99999999	99999999
GEOGRAPHIC ID NOT REPORTED OR INVALID														
LOANS ORIGINATED	99999999	99999999	99999999	99999999	99999999	99999999	99999999	99999999	99999999	99999999	99999999	99999999	99999999	99999999
APPLICAT'N APPROVED, NOT ACCEPTED	99999999	99999999	99999999	99999999	99999999	99999999	99999999	99999999	99999999	99999999	99999999	99999999	99999999	99999999
APPLICATIONS DENIED	99999999	99999999	99999999	99999999	99999999	99999999	99999999	99999999	99999999	99999999	99999999	99999999	99999999	99999999
APPLICATIONS WITHDRAWN	99999999	99999999	99999999	99999999	99999999	99999999	99999999	99999999	99999999	99999999	99999999	99999999	99999999	99999999
FILES CLOSED FOR INCOMPLETENESS	99999999	99999999	99999999	99999999	99999999	99999999	99999999	99999999	99999999	99999999	99999999	99999999	99999999	99999999
GRAND TOTAL														
LOANS ORIGINATED	99999999	99999999	99999999	99999999	99999999	99999999	99999999	99999999	99999999	99999999	99999999	99999999	99999999	99999999
APPLICAT'N APPROVED, NOT ACCEPTED	99999999	99999999	99999999	99999999	99999999	99999999	99999999	99999999	99999999	99999999	99999999	99999999	99999999	99999999
APPLICATIONS DENIED	99999999	99999999	99999999	99999999	99999999	99999999	99999999	99999999	99999999	99999999	99999999	99999999	99999999	99999999
APPLICATIONS WITHDRAWN	99999999	99999999	99999999	99999999	99999999	99999999	99999999	99999999	99999999	99999999	99999999	99999999	99999999	99999999
FILES CLOSED FOR INCOMPLETENESS	99999999	99999999	99999999	99999999	99999999	99999999	99999999	99999999	99999999	99999999	99999999	99999999	99999999	99999999

TABLE 2: LOANS PURCHASED, BY LOCATION OF PROPERTY AND TYPE OF LOAN, 2004

PAGE: 9999
RUN DATE: MM/DD/CCYY

INSTITUTION: XXXXXXXXXX-X XXXXXXXXXXXXXXXXXXXXXXXXXXXXX

MSA/MD: 99999 - XXXXXXXXXXXXXXXXXXXXXXXXXXXXXXXXXXXXXXXX

SECTION 1 -- PROPERTY LOCATED IN MSA/MD WHERE INSTITUTION HAS A HOME OR BRANCH OFFICE

CENSUS TRACT OR COUNTY NAME 1/ (STATE/COUNTY/TRACT NUMBER)	LOANS ON 1-TO-4 FAMILY AND MANUFACTURED HOME DWELLINGS								LOANS ON DWELLINGS FOR 5 OR MORE FAMILIES		NONOCCUPANT LOANS FROM COLUMNS A, B, C AND D		LOANS ON MANUFACTURED HOME DWELLINGS FROM COLUMNS A,B,C AND D	
	HOME PURCHASE LOANS				REFINANCINGS		HOME IMPROVEMENT LOANS							
	FHA, FSA/RHS & VA		CONVENTIONAL											
	A		B		C		D		E		F		G	
	NUMBER	AMOUNTS ($000'S)	NUMBER	AMOUNTS ($000'S)	NUMBER	AMOUNTS ($000'S)	NUMBER	AMOUNTS ($000'S)	NUMBER	AMOUNTS ($000'S)	NUMBER	AMOUNTS ($000'S)	NUMBER	AMOUNTS ($000'S)
GA/HENRY /0703.00	99999999	99999999	99999999	99999999	99999999	99999999	99999999	99999999	99999999	99999999	99999999	99999999	99999999	99999999
GA/DOUGLAS /0801.00	99999999	99999999	99999999	99999999	99999999	99999999	99999999	99999999	99999999	99999999	99999999	99999999	99999999	99999999
GA/CHEROKEE /0901.00	99999999	99999999	99999999	99999999	99999999	99999999	99999999	99999999	99999999	99999999	99999999	99999999	99999999	99999999
GA/NEWTON /1001.00	99999999	99999999	99999999	99999999	99999999	99999999	99999999	99999999	99999999	99999999	99999999	99999999	99999999	99999999
GA/FAYETTE /SMALL	99999999	99999999	99999999	99999999	99999999	99999999	99999999	99999999	99999999	99999999	99999999	99999999	99999999	99999999
MSA/MD TOTAL	99999999	99999999	99999999	99999999	99999999	99999999	99999999	99999999	99999999	99999999	99999999	99999999	99999999	99999999
INVALID GEOGRAPHIC IDENTIFIERS 2/	99999999	99999999	99999999	99999999	99999999	99999999	99999999	99999999	99999999	99999999	99999999	99999999	99999999	99999999

SECTION 2 -- PROPERTY NOT LOCATED IN MSA/MDS WHERE INSTITUTION HAS HOME OR BRANCH OFFICES

	99999999	99999999	99999999	99999999	99999999	99999999	99999999	99999999	99999999	99999999	99999999	99999999	99999999	99999999
INVALID MSA/MD NUMBER 2/	99999999	99999999	99999999	99999999	99999999	99999999	99999999	99999999	99999999	99999999	99999999	99999999	99999999	99999999

SUPPLEMENTAL TABLE 2: LOANS PURCHASED, BY LOCATION OF PROPERTY AND TYPE OF LOAN, 2004

PAGE: 9999
RUN DATE: MM/DD/CCYY

INSTITUTION: XXXXXXXXXX-X XXXXXXXXXXXXXXXXXXXXXXXXXXXXXX

SECTION 2 -- PROPERTY NOT LOCATED IN MSA/MDS WHERE INSTITUTION HAS HOME OR BRANCH OFFICES

CENSUS TRACT, COUNTY NAME OR STATE 1/ (STATE/COUNTY/TRACT NUMBER) 26/27/	LOANS ON 1-TO-4 FAMILY AND MANUFACTURED HOME DWELLINGS								LOANS ON DWELLINGS FOR 5 OR MORE FAMILIES		NONOCCUPANT LOANS FROM COLUMNS A, B, C AND D		LOANS ON MANUFACTURED HOME DWELLINGS FROM COLUMNS A,B,C AND D	
	HOME PURCHASE LOANS				REFINANCINGS		HOME IMPROVEMENT LOANS							
	FHA, FSA/RHS & VA A		CONVENTIONAL B		C		D		E		F		G	
	NUMBER	AMOUNTS ($000'S)	NUMBER	AMOUNTS ($000'S)	NUMBER	AMOUNTS ($000'S)	NUMBER	AMOUNTS ($000'S)	NUMBER	AMOUNTS ($000'S)	NUMBER	AMOUNTS ($000'S)	NUMBER	AMOUNTS ($000'S)
AL/JEFFERSON /0011.00	99999999	99999999	99999999	99999999	99999999	99999999	99999999	99999999	99999999	99999999	99999999	99999999	99999999	99999999
AL/JEFFERSON /COUNTY TOTAL	99999999	99999999	99999999	99999999	99999999	99999999	99999999	99999999	99999999	99999999	99999999	99999999	99999999	99999999
AL/STATE TOTAL	99999999	99999999	99999999	99999999	99999999	99999999	99999999	99999999	99999999	99999999	99999999	99999999	99999999	99999999
GA/CLARKE /0015.02	99999999	99999999	99999999	99999999	99999999	99999999	99999999	99999999	99999999	99999999	99999999	99999999	99999999	99999999
GA/CLARKE /TRACT UNKNOWN	99999999	99999999	99999999	99999999	99999999	99999999	99999999	99999999	99999999	99999999	99999999	99999999	99999999	99999999
GA/CLARKE /COUNTY TOTAL	99999999	99999999	99999999	99999999	99999999	99999999	99999999	99999999	99999999	99999999	99999999	99999999	99999999	99999999
GA/OCONEE /SMALL	99999999	99999999	99999999	99999999	99999999	99999999	99999999	99999999	99999999	99999999	99999999	99999999	99999999	99999999
GA/OCONEE /COUNTY TOTAL	99999999	99999999	99999999	99999999	99999999	99999999	99999999	99999999	99999999	99999999	99999999	99999999	99999999	99999999
GA/COUNTY UNKNOWN	99999999	99999999	99999999	99999999	99999999	99999999	99999999	99999999	99999999	99999999	99999999	99999999	99999999	99999999
GA/STATE TOTAL	99999999	99999999	99999999	99999999	99999999	99999999	99999999	99999999	99999999	99999999	99999999	99999999	99999999	99999999
GEOGRAPHIC ID NOT REPORTED OR INVALID	99999999	99999999	99999999	99999999	99999999	99999999	99999999	99999999	99999999	99999999	99999999	99999999	99999999	99999999
GRAND TOTAL	99999999	99999999	99999999	99999999	99999999	99999999	99999999	99999999	99999999	99999999	99999999	99999999	99999999	99999999

TABLE 3-1: LOANS SOLD, BY CHARACTERISTICS OF BORROWER AND OF CENSUS TRACT IN WHICH PROPERTY IS LOCATED AND BY TYPE OF PURCHASER (INCLUDES ORIGINATIONS AND PURCHASED LOANS), 2004

PAGE: 9999
RUN DATE: MM/DD/CCYY

INSTITUTION: XXXXXXXXXX-X XXXXXXXXXXXXXXXXXXXXXXXXXXXX

MSA/MD: 99999 - XXXXXXXXXXXXXXXXXXXXXXXXXXXXXXXXXXXXXXXX

BORROWER OR CENSUS TRACT CHARACTERISTICS	FANNIE MAE		GINNIE MAE		FREDDIE MAC		FARMER MAC		PRIVATE SECURITI-ZATION		COMMERCIAL BANK, SAVINGS BANK, OR SAVING ASSOC		INSURANCE CO, CREDIT UNION, MORTGAGE BK, OR FINANCE CO		AFFILIATE INSTITUTION		OTHER PURCHASER	
	#	$000'S	#	$000'S	#	$000'S	#	$000'S	#	$000'S	#	$000'S	#	$000'S	#	$000'S	#	$000'S
BORROWER CHARACTERISTICS																		
RACE 5/																		
AMERICAN INDIAN/ALASKA NATIVE	99999	9999999	99999	9999999	99999	9999999	99999	9999999	99999	9999999	99999	9999999	99999	9999999	99999	9999999	99999	9999999
ASIAN	99999	9999999	99999	9999999	99999	9999999	99999	9999999	99999	9999999	99999	9999999	99999	9999999	99999	9999999	99999	9999999
BLACK OR AFRICAN AMERICAN	99999	9999999	99999	9999999	99999	9999999	99999	9999999	99999	9999999	99999	9999999	99999	9999999	99999	9999999	99999	9999999
NAT HAWAIIAN/OTHER PACIFIC ISLND	99999	9999999	99999	9999999	99999	9999999	99999	9999999	99999	9999999	99999	9999999	99999	9999999	99999	9999999	99999	9999999
WHITE	99999	9999999	99999	9999999	99999	9999999	99999	9999999	99999	9999999	99999	9999999	99999	9999999	99999	9999999	99999	9999999
2 OR MORE MINORITY RACES	99999	9999999	99999	9999999	99999	9999999	99999	9999999	99999	9999999	99999	9999999	99999	9999999	99999	9999999	99999	9999999
JOINT (WHITE/MINORITY RACE)	99999	9999999	99999	9999999	99999	9999999	99999	9999999	99999	9999999	99999	9999999	99999	9999999	99999	9999999	99999	9999999
RACE NOT AVAILABLE 6/	99999	9999999	99999	9999999	99999	9999999	99999	9999999	99999	9999999	99999	9999999	99999	9999999	99999	9999999	99999	9999999
ETHNICITY 7/																		
HISPANIC OR LATINO	99999	9999999	99999	9999999	99999	9999999	99999	9999999	99999	9999999	99999	9999999	99999	9999999	99999	9999999	99999	9999999
NOT HISPANIC OR LATINO	99999	9999999	99999	9999999	99999	9999999	99999	9999999	99999	9999999	99999	9999999	99999	9999999	99999	9999999	99999	9999999
JOINT (HISPANIC OR LATINO/ NOT HISPANIC OR LATINO)	99999	9999999	99999	9999999	99999	9999999	99999	9999999	99999	9999999	99999	9999999	99999	9999999	99999	9999999	99999	9999999
ETHNICITY NOT AVAILABLE 6/	99999	9999999	99999	9999999	99999	9999999	99999	9999999	99999	9999999	99999	9999999	99999	9999999	99999	9999999	99999	9999999
MINORITY STATUS 8/																		
WHITE NON-HISPANIC	99999	9999999	99999	9999999	99999	9999999	99999	9999999	99999	9999999	99999	9999999	99999	9999999	99999	9999999	99999	9999999
OTHERS, INCLUDING HISPANIC	99999	9999999	99999	9999999	99999	9999999	99999	9999999	99999	9999999	99999	9999999	99999	9999999	99999	9999999	99999	9999999
INCOME 9/																		
LESS THAN 50% OF MSA/MD MEDIAN	99999	9999999	99999	9999999	99999	9999999	99999	9999999	99999	9999999	99999	9999999	99999	9999999	99999	9999999	99999	9999999
50-79% OF MSA/MD MEDIAN	99999	9999999	99999	9999999	99999	9999999	99999	9999999	99999	9999999	99999	9999999	99999	9999999	99999	9999999	99999	9999999
80-99% OF MSA/MD MEDIAN	99999	9999999	99999	9999999	99999	9999999	99999	9999999	99999	9999999	99999	9999999	99999	9999999	99999	9999999	99999	9999999
100-119% OF MSA/MD MEDIAN	99999	9999999	99999	9999999	99999	9999999	99999	9999999	99999	9999999	99999	9999999	99999	9999999	99999	9999999	99999	9999999
120% OR MORE OF MSA/MD MEDIAN	99999	9999999	99999	9999999	99999	9999999	99999	9999999	99999	9999999	99999	9999999	99999	9999999	99999	9999999	99999	9999999
INCOME NOT AVAILABLE 6/	99999	9999999	99999	9999999	99999	9999999	99999	9999999	99999	9999999	99999	9999999	99999	9999999	99999	9999999	99999	9999999
CENSUS TRACT CHARACTERISTICS 10/																		
RACIAL/ETHNIC COMPOSITION 11/																		
LESS THAN 10% MINORITY	99999	9999999	99999	9999999	99999	9999999	99999	9999999	99999	9999999	99999	9999999	99999	9999999	99999	9999999	99999	9999999
10-19% MINORITY	99999	9999999	99999	9999999	99999	9999999	99999	9999999	99999	9999999	99999	9999999	99999	9999999	99999	9999999	99999	9999999
20-49% MINORITY	99999	9999999	99999	9999999	99999	9999999	99999	9999999	99999	9999999	99999	9999999	99999	9999999	99999	9999999	99999	9999999
50-79% MINORITY	99999	9999999	99999	9999999	99999	9999999	99999	9999999	99999	9999999	99999	9999999	99999	9999999	99999	9999999	99999	9999999
80-100% MINORITY	99999	9999999	99999	9999999	99999	9999999	99999	9999999	99999	9999999	99999	9999999	99999	9999999	99999	9999999	99999	9999999
INCOME 12/ 13/																		
LOW INCOME	99999	9999999	99999	9999999	99999	9999999	99999	9999999	99999	9999999	99999	9999999	99999	9999999	99999	9999999	99999	9999999
MODERATE INCOME	99999	9999999	99999	9999999	99999	9999999	99999	9999999	99999	9999999	99999	9999999	99999	9999999	99999	9999999	99999	9999999
MIDDLE INCOME	99999	9999999	99999	9999999	99999	9999999	99999	9999999	99999	9999999	99999	9999999	99999	9999999	99999	9999999	99999	9999999
UPPER INCOME	99999	9999999	99999	9999999	99999	9999999	99999	9999999	99999	9999999	99999	9999999	99999	9999999	99999	9999999	99999	9999999
TOTAL 14/	99999	9999999	99999	9999999	99999	9999999	99999	9999999	99999	9999999	99999	9999999	99999	9999999	99999	9999999	99999	9999999

TABLE 3-2: PRICING INFORMATION FOR FIRST AND JUNIOR LIEN LOANS SOLD BY TYPE OF PURCHASER (INCLUDES ORIGINATIONS ONLY), 2004

PAGE: 9999
RUN DATE: MM/DD/CCYY

INSTITUTION: XXXXXXXXXX-X XXXXXXXXXXXXXXXXXXXXXXXXXXXXXX

MSA/MD: 99999 - XXXXXXXXXXXXXXXXXXXXXXXXXXXXXXXXXXXXXXXX

PRICING INFORMATION	FANNIE MAE		GINNIE MAE		FREDDIE MAC		FARMER MAC		PRIVATE SECURITI-ZATION		COMMERCIAL BANK, SAVINGS BANK, OR SAVING ASSOC		INSURANCE CO, CREDIT UNION, MORTGAGE BK, OR FINANCE CO		AFFILIATE INSTITUTION		OTHER PURCHASER	
	FIRST LIEN #	JUNIOR LIEN #	FIRST LIEN #	JUNIOR LIEN #	FIRST LIEN #	JUNIOR LIEN #	FIRST LIEN #	JUNIOR LIEN #	FIRST LIEN #	JUNIOR LIEN #	FIRST LIEN #	JUNIOR LIEN #	FIRST LIEN #	JUNIOR LIEN #	FIRST LIEN #	JUNIOR LIEN #	FIRST LIEN #	JUNIOR LIEN #
15/ NO REPORTED PRICING DATA	9999999	9999999	9999999	9999999	9999999	9999999	9999999	9999999	9999999	9999999	9999999	9999999	9999999	9999999	9999999	9999999	9999999	9999999
REPORTED PRICING DATA	9999999	9999999	9999999	9999999	9999999	9999999	9999999	9999999	9999999	9999999	9999999	9999999	9999999	9999999	9999999	9999999	9999999	9999999
PERCENTAGE POINTS ABOVE TREASURY: ONLY INCLUDES LOANS WITH APR ABOVE THE THRESHOLD 16/																		
3 - 3.99	9999999	NA	9999999	NA	9999999	NA	9999999	NA	9999999	NA	9999999	NA	9999999	NA	9999999	NA	9999999	NA
4 - 4.99	9999999	NA	9999999	NA	9999999	NA	9999999	NA	9999999	NA	9999999	NA	9999999	NA	9999999	NA	9999999	NA
5 - 5.99	9999999	9999999	9999999	9999999	9999999	9999999	9999999	9999999	9999999	9999999	9999999	9999999	9999999	9999999	9999999	9999999	9999999	9999999
6 - 6.99	9999999	9999999	9999999	9999999	9999999	9999999	9999999	9999999	9999999	9999999	9999999	9999999	9999999	9999999	9999999	9999999	9999999	9999999
7 - 7.99	9999999	9999999	9999999	9999999	9999999	9999999	9999999	9999999	9999999	9999999	9999999	9999999	9999999	9999999	9999999	9999999	9999999	9999999
8 - 8.99	9999999	9999999	9999999	9999999	9999999	9999999	9999999	9999999	9999999	9999999	9999999	9999999	9999999	9999999	9999999	9999999	9999999	9999999
9 - 9.99	9999999	9999999	9999999	9999999	9999999	9999999	9999999	9999999	9999999	9999999	9999999	9999999	9999999	9999999	9999999	9999999	9999999	9999999
10 OR MORE	9999999	9999999	9999999	9999999	9999999	9999999	9999999	9999999	9999999	9999999	9999999	9999999	9999999	9999999	9999999	9999999	9999999	9999999
MEAN	99.99	99.99	99.99	99.99	99.99	99.99	99.99	99.99	99.99	99.99	99.99	99.99	99.99	99.99	99.99	99.99	99.99	99.99
MEDIAN	99.99	99.99	99.99	99.99	99.99	99.99	99.99	99.99	99.99	99.99	99.99	99.99	99.99	99.99	99.99	99.99	99.99	99.99
HOEPA LOANS 17/	9999999	9999999	9999999	9999999	9999999	9999999	9999999	9999999	9999999	9999999	9999999	9999999	9999999	9999999	9999999	9999999	9999999	9999999

TABLE 3-2: PRICING INFORMATION FOR FIRST AND JUNIOR LIEN LOANS SOLD BY TYPE OF PURCHASER (INCLUDES ORIGINATIONS ONLY), 2004

PAGE: 9999
RUN DATE: MM/DD/CCYY

INSTITUTION: XXXXXXXXXX-X XXXXXXXXXXXXXXXXXXXXXXXXXXXXX

MSA/MD: 99999 - XXXXXXXXXXXXXXXXXXXXXXXXXXXXXXXXXXXXXXXX

PRICING INFORMATION	FANNIE MAE		GINNIE MAE		FREDDIE MAC		FARMER MAC		PRIVATE SECURITI-ZATION		COMMERCIAL BANK, SAVINGS BANK, OR SAVING ASSOC		INSURANCE CO, CREDIT UNION, MORTGAGE BK, OR FINANCE CO		AFFILIATE INSTITUTION		OTHER PURCHASER	
	FIRST LIEN $000'S	JUNIOR LIEN $000'S	FIRST LIEN $000'S	JUNIOR LIEN $000'S	FIRST LIEN $000'S	JUNIOR LIEN $000'S	FIRST LIEN $000'S	JUNIOR LIEN $000'S	FIRST LIEN $000'S	JUNIOR LIEN $000'S	FIRST LIEN $000'S	JUNIOR LIEN $000'S	FIRST LIEN $000'S	JUNIOR LIEN $000'S	FIRST LIEN $000'S	JUNIOR LIEN $000'S	FIRST LIEN $000'S	JUNIOR LIEN $000'S
15/ NO REPORTED PRICING DATA	9999999	9999999	9999999	9999999	9999999	9999999	9999999	9999999	9999999	9999999	9999999	9999999	9999999	9999999	9999999	9999999	9999999	9999999
REPORTED PRICING DATA	9999999	9999999	9999999	9999999	9999999	9999999	9999999	9999999	9999999	9999999	9999999	9999999	9999999	9999999	9999999	9999999	9999999	9999999
PERCENTAGE POINTS ABOVE TREASURY: ONLY INCLUDES LOANS WITH APR ABOVE THE THRESHOLD 16/																		
3 - 3.99	9999999	NA	9999999	NA	9999999	NA	9999999	NA	9999999	NA	9999999	NA	9999999	NA	9999999	NA	9999999	NA
4 - 4.99	9999999	NA	9999999	NA	9999999	NA	9999999	NA	9999999	NA	9999999	NA	9999999	NA	9999999	NA	9999999	NA
5 - 5.99	9999999	9999999	9999999	9999999	9999999	9999999	9999999	9999999	9999999	9999999	9999999	9999999	9999999	9999999	9999999	9999999	9999999	9999999
6 - 6.99	9999999	9999999	9999999	9999999	9999999	9999999	9999999	9999999	9999999	9999999	9999999	9999999	9999999	9999999	9999999	9999999	9999999	9999999
7 - 7.99	9999999	9999999	9999999	9999999	9999999	9999999	9999999	9999999	9999999	9999999	9999999	9999999	9999999	9999999	9999999	9999999	9999999	9999999
8 - 8.99	9999999	9999999	9999999	9999999	9999999	9999999	9999999	9999999	9999999	9999999	9999999	9999999	9999999	9999999	9999999	9999999	9999999	9999999
9 - 9.99	9999999	9999999	9999999	9999999	9999999	9999999	9999999	9999999	9999999	9999999	9999999	9999999	9999999	9999999	9999999	9999999	9999999	9999999
10 OR MORE	9999999	9999999	9999999	9999999	9999999	9999999	9999999	9999999	9999999	9999999	9999999	9999999	9999999	9999999	9999999	9999999	9999999	9999999
MEAN	NA	NA	NA	NA	NA	NA	NA	NA	NA	NA	NA	NA	NA	NA	NA	NA	NA	NA
MEDIAN	NA	NA	NA	NA	NA	NA	NA	NA	NA	NA	NA	NA	NA	NA	NA	NA	NA	NA
HOEPA LOANS 17/	9999999	9999999	9999999	9999999	9999999	9999999	9999999	9999999	9999999	9999999	9999999	9999999	9999999	9999999	9999999	9999999	9999999	9999999

TABLE 4-1: DISPOSITION OF APPLICATIONS FOR FHA, FSA/RHS, AND VA HOME-PURCHASE LOANS, 1- TO 4-FAMILY AND MANUFACTURED HOME DWELLINGS, BY RACE, ETHNICITY, GENDER AND INCOME OF APPLICANT, 2004

PAGE: 9999
RUN DATE: MM/DD/CCYY

INSTITUTION: XXXXXXXXXX-X XXXXXXXXXXXXXXXXXXXXXXXXXXXXX

MSA/MD: 99999 - XXXXXXXXXXXXXXXXXXXX

TABLE 4-1: DISPOSITION OF APPLICATIONS FOR FHA, FSA/RHS, AND VA HOME-PURCHASE LOANS, 1- TO 4-FAMILY AND MANUFACTURED HOME DWELLINGS, BY RACE, ETHNICITY, GENDER AND INCOME OF APPLICANT, 2004

PAGE: 9999
RUN DATE: MM/DD/CCYY

INSTITUTION: XXXXXXXXXX-X XXXXXXXXXXXXXXXXXXXXXXXXXXXX

MSA/MD: 99999 - XXXXXXXXXXXXXXXXXXXXXXXXXXXXXXXXXXXXXXXX

ETHNICITY, GENDER AND INCOME 7/ 18/ 19/	APPLICATIONS RECEIVED 20/		LOANS ORIGINATED		APPS. APPROVED BUT NOT ACCEPTED		APPLICATIONS DENIED		APPLICATIONS WITHDRAWN		FILES CLOSED FOR INCOMPLETENESS	
	NUMBER	$000'S	NUMBER	$000'S	NUMBER	$000'S	NUMBER	$000'S	NUMBER	$000'S	NUMBER	$000'S
HISPANIC OR LATINO (TOTAL)	99999999	99999999	99999999	99999999	99999999	99999999	99999999	99999999	99999999	99999999	99999999	99999999
MALE	99999999	99999999	99999999	99999999	99999999	99999999	99999999	99999999	99999999	99999999	99999999	99999999
FEMALE	99999999	99999999	99999999	99999999	99999999	99999999	99999999	99999999	99999999	99999999	99999999	99999999
JOINT (MALE/FEMALE)	99999999	99999999	99999999	99999999	99999999	99999999	99999999	99999999	99999999	99999999	99999999	99999999
NOT HISPANIC OR LATINO (TOTAL)	99999999	99999999	99999999	99999999	99999999	99999999	99999999	99999999	99999999	99999999	99999999	99999999
MALE	99999999	99999999	99999999	99999999	99999999	99999999	99999999	99999999	99999999	99999999	99999999	99999999
FEMALE	99999999	99999999	99999999	99999999	99999999	99999999	99999999	99999999	99999999	99999999	99999999	99999999
JOINT (MALE/FEMALE)	99999999	99999999	99999999	99999999	99999999	99999999	99999999	99999999	99999999	99999999	99999999	99999999
JOINT (HISPANIC OR LATINO/ NOT HISPANIC OR LATINO) (TOTAL)	99999999	99999999	99999999	99999999	99999999	99999999	99999999	99999999	99999999	99999999	99999999	99999999
MALE	99999999	99999999	99999999	99999999	99999999	99999999	99999999	99999999	99999999	99999999	99999999	99999999
FEMALE	99999999	99999999	99999999	99999999	99999999	99999999	99999999	99999999	99999999	99999999	99999999	99999999
JOINT (MALE/FEMALE)	99999999	99999999	99999999	99999999	99999999	99999999	99999999	99999999	99999999	99999999	99999999	99999999
ETHNICITY NOT AVAILABLE (TOTAL) 6/	99999999	99999999	99999999	99999999	99999999	99999999	99999999	99999999	99999999	99999999	99999999	99999999
MALE	99999999	99999999	99999999	99999999	99999999	99999999	99999999	99999999	99999999	99999999	99999999	99999999
FEMALE	99999999	99999999	99999999	99999999	99999999	99999999	99999999	99999999	99999999	99999999	99999999	99999999
JOINT (MALE/FEMALE)	99999999	99999999	99999999	99999999	99999999	99999999	99999999	99999999	99999999	99999999	99999999	99999999
MINORITY STATUS 8/ 18/ 19/												
WHITE NON-HISPANIC (TOTAL)	99999999	99999999	99999999	99999999	99999999	99999999	99999999	99999999	99999999	99999999	99999999	99999999
MALE	99999999	99999999	99999999	99999999	99999999	99999999	99999999	99999999	99999999	99999999	99999999	99999999
FEMALE	99999999	99999999	99999999	99999999	99999999	99999999	99999999	99999999	99999999	99999999	99999999	99999999
JOINT (MALE/FEMALE)	99999999	99999999	99999999	99999999	99999999	99999999	99999999	99999999	99999999	99999999	99999999	99999999
OTHERS, INCLUDING HISPANIC (TOTAL)	99999999	99999999	99999999	99999999	99999999	99999999	99999999	99999999	99999999	99999999	99999999	99999999
MALE	99999999	99999999	99999999	99999999	99999999	99999999	99999999	99999999	99999999	99999999	99999999	99999999
FEMALE	99999999	99999999	99999999	99999999	99999999	99999999	99999999	99999999	99999999	99999999	99999999	99999999
JOINT (MALE/FEMALE)	99999999	99999999	99999999	99999999	99999999	99999999	99999999	99999999	99999999	99999999	99999999	99999999
INCOME OF APPLICANTS 9/												
LESS THAN 50% OF MSA/MD MEDIAN	99999999	99999999	99999999	99999999	99999999	99999999	99999999	99999999	99999999	99999999	99999999	99999999
50-79% OF MSA/MD MEDIAN	99999999	99999999	99999999	99999999	99999999	99999999	99999999	99999999	99999999	99999999	99999999	99999999
80-99% OF MSA/MD MEDIAN	99999999	99999999	99999999	99999999	99999999	99999999	99999999	99999999	99999999	99999999	99999999	99999999
100-119% OF MSA/MD MEDIAN	99999999	99999999	99999999	99999999	99999999	99999999	99999999	99999999	99999999	99999999	99999999	99999999
120% OR MORE OF MSA/MD MEDIAN	99999999	99999999	99999999	99999999	99999999	99999999	99999999	99999999	99999999	99999999	99999999	99999999
INCOME NOT AVAILABLE 6/	99999999	99999999	99999999	99999999	99999999	99999999	99999999	99999999	99999999	99999999	99999999	99999999
TOTAL 14/	99999999	99999999	99999999	99999999	99999999	99999999	99999999	99999999	99999999	99999999	99999999	99999999

TABLE 4-2: DISPOSITION OF APPLICATIONS FOR CONVENTIONAL HOME-PURCHASE LOANS, 1- TO 4-FAMILY AND MANUFACTURED HOME DWELLINGS, BY RACE, ETHNICITY, GENDER AND INCOME OF APPLICANT, 2004

PAGE: 9999
RUN DATE: MM/DD/CCYY

INSTITUTION: XXXXXXXXXX-X XXXXXXXXXXXXXXXXXXXXXXXXXXXX

MSA/MD: 99999 - XXXXXXXXXXXXXXXXXXXXXXXXXXXXXXXXXXXXXXXX

RACE AND GENDER 5/ 18/ 19/	APPLICATIONS RECEIVED 20/		LOANS ORIGINATED		APPS. APPROVED BUT NOT ACCEPTED		APPLICATIONS DENIED		APPLICATIONS WITHDRAWN		FILES CLOSED FOR INCOMPLETENESS	
	NUMBER	$000'S	NUMBER	$000'S	NUMBER	$000'S	NUMBER	$000'S	NUMBER	$000'S	NUMBER	$000'S
AMERICAN INDIAN/ALASKA NATIVE(TOTAL)	99999999	99999999	99999999	99999999	99999999	99999999	99999999	99999999	99999999	99999999	99999999	99999999
MALE	99999999	99999999	99999999	99999999	99999999	99999999	99999999	99999999	99999999	99999999	99999999	99999999
FEMALE	99999999	99999999	99999999	99999999	99999999	99999999	99999999	99999999	99999999	99999999	99999999	99999999
JOINT (MALE/FEMALE)	99999999	99999999	99999999	99999999	99999999	99999999	99999999	99999999	99999999	99999999	99999999	99999999
ASIAN (TOTAL)	99999999	99999999	99999999	99999999	99999999	99999999	99999999	99999999	99999999	99999999	99999999	99999999
MALE	99999999	99999999	99999999	99999999	99999999	99999999	99999999	99999999	99999999	99999999	99999999	99999999
FEMALE	99999999	99999999	99999999	99999999	99999999	99999999	99999999	99999999	99999999	99999999	99999999	99999999
JOINT (MALE/FEMALE)	99999999	99999999	99999999	99999999	99999999	99999999	99999999	99999999	99999999	99999999	99999999	99999999
BLACK OR AFRICAN AMERICAN (TOTAL)	99999999	99999999	99999999	99999999	99999999	99999999	99999999	99999999	99999999	99999999	99999999	99999999
MALE	99999999	99999999	99999999	99999999	99999999	99999999	99999999	99999999	99999999	99999999	99999999	99999999
FEMALE	99999999	99999999	99999999	99999999	99999999	99999999	99999999	99999999	99999999	99999999	99999999	99999999
JOINT (MALE/FEMALE)	99999999	99999999	99999999	99999999	99999999	99999999	99999999	99999999	99999999	99999999	99999999	99999999
NAT HAWAIIAN/OTHER PACIFIC ISL(TOTAL)	99999999	99999999	99999999	99999999	99999999	99999999	99999999	99999999	99999999	99999999	99999999	99999999
MALE	99999999	99999999	99999999	99999999	99999999	99999999	99999999	99999999	99999999	99999999	99999999	99999999
FEMALE	99999999	99999999	99999999	99999999	99999999	99999999	99999999	99999999	99999999	99999999	99999999	99999999
JOINT (MALE/FEMALE)	99999999	99999999	99999999	99999999	99999999	99999999	99999999	99999999	99999999	99999999	99999999	99999999
WHITE (TOTAL)	99999999	99999999	99999999	99999999	99999999	99999999	99999999	99999999	99999999	99999999	99999999	99999999
MALE	99999999	99999999	99999999	99999999	99999999	99999999	99999999	99999999	99999999	99999999	99999999	99999999
FEMALE	99999999	99999999	99999999	99999999	99999999	99999999	99999999	99999999	99999999	99999999	99999999	99999999
JOINT (MALE/FEMALE)	99999999	99999999	99999999	99999999	99999999	99999999	99999999	99999999	99999999	99999999	99999999	99999999
2 OR MORE MINORITY RACES (TOTAL)	99999999	99999999	99999999	99999999	99999999	99999999	99999999	99999999	99999999	99999999	99999999	99999999
MALE	99999999	99999999	99999999	99999999	99999999	99999999	99999999	99999999	99999999	99999999	99999999	99999999
FEMALE	99999999	99999999	99999999	99999999	99999999	99999999	99999999	99999999	99999999	99999999	99999999	99999999
JOINT (MALE/FEMALE)	99999999	99999999	99999999	99999999	99999999	99999999	99999999	99999999	99999999	99999999	99999999	99999999
JOINT (WHITE/MINORITY RACE) (TOTAL)	99999999	99999999	99999999	99999999	99999999	99999999	99999999	99999999	99999999	99999999	99999999	99999999
MALE	99999999	99999999	99999999	99999999	99999999	99999999	99999999	99999999	99999999	99999999	99999999	99999999
FEMALE	99999999	99999999	99999999	99999999	99999999	99999999	99999999	99999999	99999999	99999999	99999999	99999999
JOINT (MALE/FEMALE)	99999999	99999999	99999999	99999999	99999999	99999999	99999999	99999999	99999999	99999999	99999999	99999999
RACE NOT AVAILABLE 6/(TOTAL)	99999999	99999999	99999999	99999999	99999999	99999999	99999999	99999999	99999999	99999999	99999999	99999999
MALE	99999999	99999999	99999999	99999999	99999999	99999999	99999999	99999999	99999999	99999999	99999999	99999999
FEMALE	99999999	99999999	99999999	99999999	99999999	99999999	99999999	99999999	99999999	99999999	99999999	99999999
JOINT (MALE/FEMALE)	99999999	99999999	99999999	99999999	99999999	99999999	99999999	99999999	99999999	99999999	99999999	99999999

TABLE 4-2: DISPOSITION OF APPLICATIONS FOR CONVENTIONAL HOME-PURCHASE LOANS, 1- TO 4-FAMILY AND MANUFACTURED HOME DWELLINGS, BY RACE, ETHNICITY, GENDER AND INCOME OF APPLICANT, 2004

PAGE: 9999
RUN DATE: MM/DD/CCYY

INSTITUTION: XXXXXXXXXX-X XXXXXXXXXXXXXXXXXXXXXXXXXXXXX

MSA/MD: 99999 - XXXXXXXXXXXXXXXXXXXXXXXXXXXXXXXXXXXXXXXX

ETHNICITY, GENDER AND INCOME 7/ 18/ 19/	APPLICATIONS RECEIVED 20/		LOANS ORIGINATED		APPS. APPROVED BUT NOT ACCEPTED		APPLICATIONS DENIED		APPLICATIONS WITHDRAWN		FILES CLOSED FOR INCOMPLETENESS	
	NUMBER	$000'S	NUMBER	$000'S	NUMBER	$000'S	NUMBER	$000'S	NUMBER	$000'S	NUMBER	$000'S
HISPANIC OR LATINO (TOTAL)	99999999	99999999	99999999	99999999	99999999	99999999	99999999	99999999	99999999	99999999	99999999	99999999
MALE	99999999	99999999	99999999	99999999	99999999	99999999	99999999	99999999	99999999	99999999	99999999	99999999
FEMALE	99999999	99999999	99999999	99999999	99999999	99999999	99999999	99999999	99999999	99999999	99999999	99999999
JOINT (MALE/FEMALE)	99999999	99999999	99999999	99999999	99999999	99999999	99999999	99999999	99999999	99999999	99999999	99999999
NOT HISPANIC OR LATINO (TOTAL)	99999999	99999999	99999999	99999999	99999999	99999999	99999999	99999999	99999999	99999999	99999999	99999999
MALE	99999999	99999999	99999999	99999999	99999999	99999999	99999999	99999999	99999999	99999999	99999999	99999999
FEMALE	99999999	99999999	99999999	99999999	99999999	99999999	99999999	99999999	99999999	99999999	99999999	99999999
JOINT (MALE/FEMALE)	99999999	99999999	99999999	99999999	99999999	99999999	99999999	99999999	99999999	99999999	99999999	99999999
JOINT (HISPANIC OR LATINO/ NOT HISPANIC OR LATINO)(TOTAL)	99999999	99999999	99999999	99999999	99999999	99999999	99999999	99999999	99999999	99999999	99999999	99999999
MALE	99999999	99999999	99999999	99999999	99999999	99999999	99999999	99999999	99999999	99999999	99999999	99999999
FEMALE	99999999	99999999	99999999	99999999	99999999	99999999	99999999	99999999	99999999	99999999	99999999	99999999
JOINT (MALE/FEMALE)	99999999	99999999	99999999	99999999	99999999	99999999	99999999	99999999	99999999	99999999	99999999	99999999
ETHNICITY NOT AVAILABLE (TOTAL) 6/	99999999	99999999	99999999	99999999	99999999	99999999	99999999	99999999	99999999	99999999	99999999	99999999
MALE	99999999	99999999	99999999	99999999	99999999	99999999	99999999	99999999	99999999	99999999	99999999	99999999
FEMALE	99999999	99999999	99999999	99999999	99999999	99999999	99999999	99999999	99999999	99999999	99999999	99999999
JOINT (MALE/FEMALE)	99999999	99999999	99999999	99999999	99999999	99999999	99999999	99999999	99999999	99999999	99999999	99999999
MINORITY STATUS 8/ 18/ 19/												
WHITE NON-HISPANIC (TOTAL)	99999999	99999999	99999999	99999999	99999999	99999999	99999999	99999999	99999999	99999999	99999999	99999999
MALE	99999999	99999999	99999999	99999999	99999999	99999999	99999999	99999999	99999999	99999999	99999999	99999999
FEMALE	99999999	99999999	99999999	99999999	99999999	99999999	99999999	99999999	99999999	99999999	99999999	99999999
JOINT (MALE/FEMALE)	99999999	99999999	99999999	99999999	99999999	99999999	99999999	99999999	99999999	99999999	99999999	99999999
OTHERS, INCLUDING HISPANIC (TOTAL)	99999999	99999999	99999999	99999999	99999999	99999999	99999999	99999999	99999999	99999999	99999999	99999999
MALE	99999999	99999999	99999999	99999999	99999999	99999999	99999999	99999999	99999999	99999999	99999999	99999999
FEMALE	99999999	99999999	99999999	99999999	99999999	99999999	99999999	99999999	99999999	99999999	99999999	99999999
JOINT (MALE/FEMALE)	99999999	99999999	99999999	99999999	99999999	99999999	99999999	99999999	99999999	99999999	99999999	99999999
INCOME OF APPLICANTS 9/												
LESS THAN 50% OF MSA/MD MEDIAN	99999999	99999999	99999999	99999999	99999999	99999999	99999999	99999999	99999999	99999999	99999999	99999999
50-79% OF MSA/MD MEDIAN	99999999	99999999	99999999	99999999	99999999	99999999	99999999	99999999	99999999	99999999	99999999	99999999
80-99% OF MSA/MD MEDIAN	99999999	99999999	99999999	99999999	99999999	99999999	99999999	99999999	99999999	99999999	99999999	99999999
100-119% OF MSA/MD MEDIAN	99999999	99999999	99999999	99999999	99999999	99999999	99999999	99999999	99999999	99999999	99999999	99999999
120% OR MORE OF MSA/MD MEDIAN	99999999	99999999	99999999	99999999	99999999	99999999	99999999	99999999	99999999	99999999	99999999	99999999
INCOME NOT AVAILABLE 6/	99999999	99999999	99999999	99999999	99999999	99999999	99999999	99999999	99999999	99999999	99999999	99999999
TOTAL 14/	99999999	99999999	99999999	99999999	99999999	99999999	99999999	99999999	99999999	99999999	99999999	99999999

TABLE 4-3: DISPOSITION OF APPLICATIONS TO REFINANCE LOANS ON
1- TO 4-FAMILY AND MANUFACTURED HOME DWELLINGS, BY RACE, ETHNICITY, GENDER AND INCOME OF APPLICANT, 2004

PAGE: 9999
RUN DATE: MM/DD/CCYY

INSTITUTION: XXXXXXXXXX-X XXXXXXXXXXXXXXXXXXXXXXXXXXXX

MSA/MD: 99999 - XXXXXXXXXXXXXXXXXXXXXXXXXXXXXXXXXXXXXXXX

RACE AND GENDER 5/ 18/ 19/	APPLICATIONS RECEIVED 20/		LOANS ORIGINATED		APPS. APPROVED BUT NOT ACCEPTED		APPLICATIONS DENIED		APPLICATIONS WITHDRAWN		FILES CLOSED FOR INCOMPLETENESS	
	NUMBER	$000'S	NUMBER	$000'S	NUMBER	$000'S	NUMBER	$000'S	NUMBER	$000'S	NUMBER	$000'S
AMERICAN INDIAN/ALASKA NATIVE(TOTAL)	99999999	99999999	99999999	99999999	99999999	99999999	99999999	99999999	99999999	99999999	99999999	99999999
MALE	99999999	99999999	99999999	99999999	99999999	99999999	99999999	99999999	99999999	99999999	99999999	99999999
FEMALE	99999999	99999999	99999999	99999999	99999999	99999999	99999999	99999999	99999999	99999999	99999999	99999999
JOINT (MALE/FEMALE)	99999999	99999999	99999999	99999999	99999999	99999999	99999999	99999999	99999999	99999999	99999999	99999999
ASIAN (TOTAL)	99999999	99999999	99999999	99999999	99999999	99999999	99999999	99999999	99999999	99999999	99999999	99999999
MALE	99999999	99999999	99999999	99999999	99999999	99999999	99999999	99999999	99999999	99999999	99999999	99999999
FEMALE	99999999	99999999	99999999	99999999	99999999	99999999	99999999	99999999	99999999	99999999	99999999	99999999
JOINT (MALE/FEMALE)	99999999	99999999	99999999	99999999	99999999	99999999	99999999	99999999	99999999	99999999	99999999	99999999
BLACK OR AFRICAN AMERICAN (TOTAL)	99999999	99999999	99999999	99999999	99999999	99999999	99999999	99999999	99999999	99999999	99999999	99999999
MALE	99999999	99999999	99999999	99999999	99999999	99999999	99999999	99999999	99999999	99999999	99999999	99999999
FEMALE	99999999	99999999	99999999	99999999	99999999	99999999	99999999	99999999	99999999	99999999	99999999	99999999
JOINT (MALE/FEMALE)	99999999	99999999	99999999	99999999	99999999	99999999	99999999	99999999	99999999	99999999	99999999	99999999
NAT HAWAIIAN/OTHER PACIFIC ISL(TOTAL)	99999999	99999999	99999999	99999999	99999999	99999999	99999999	99999999	99999999	99999999	99999999	99999999
MALE	99999999	99999999	99999999	99999999	99999999	99999999	99999999	99999999	99999999	99999999	99999999	99999999
FEMALE	99999999	99999999	99999999	99999999	99999999	99999999	99999999	99999999	99999999	99999999	99999999	99999999
JOINT (MALE/FEMALE)	99999999	99999999	99999999	99999999	99999999	99999999	99999999	99999999	99999999	99999999	99999999	99999999
WHITE (TOTAL)	99999999	99999999	99999999	99999999	99999999	99999999	99999999	99999999	99999999	99999999	99999999	99999999
MALE	99999999	99999999	99999999	99999999	99999999	99999999	99999999	99999999	99999999	99999999	99999999	99999999
FEMALE	99999999	99999999	99999999	99999999	99999999	99999999	99999999	99999999	99999999	99999999	99999999	99999999
JOINT (MALE/FEMALE)	99999999	99999999	99999999	99999999	99999999	99999999	99999999	99999999	99999999	99999999	99999999	99999999
2 OR MORE MINORITY RACES (TOTAL)	99999999	99999999	99999999	99999999	99999999	99999999	99999999	99999999	99999999	99999999	99999999	99999999
MALE	99999999	99999999	99999999	99999999	99999999	99999999	99999999	99999999	99999999	99999999	99999999	99999999
FEMALE	99999999	99999999	99999999	99999999	99999999	99999999	99999999	99999999	99999999	99999999	99999999	99999999
JOINT (MALE/FEMALE)	99999999	99999999	99999999	99999999	99999999	99999999	99999999	99999999	99999999	99999999	99999999	99999999
JOINT (WHITE/MINORITY RACE) (TOTAL)	99999999	99999999	99999999	99999999	99999999	99999999	99999999	99999999	99999999	99999999	99999999	99999999
MALE	99999999	99999999	99999999	99999999	99999999	99999999	99999999	99999999	99999999	99999999	99999999	99999999
FEMALE	99999999	99999999	99999999	99999999	99999999	99999999	99999999	99999999	99999999	99999999	99999999	99999999
JOINT (MALE/FEMALE)	99999999	99999999	99999999	99999999	99999999	99999999	99999999	99999999	99999999	99999999	99999999	99999999
RACE NOT AVAILABLE 6/(TOTAL)	99999999	99999999	99999999	99999999	99999999	99999999	99999999	99999999	99999999	99999999	99999999	99999999
MALE	99999999	99999999	99999999	99999999	99999999	99999999	99999999	99999999	99999999	99999999	99999999	99999999
FEMALE	99999999	99999999	99999999	99999999	99999999	99999999	99999999	99999999	99999999	99999999	99999999	99999999
JOINT (MALE/FEMALE)	99999999	99999999	99999999	99999999	99999999	99999999	99999999	99999999	99999999	99999999	99999999	99999999

TABLE 4-3: DISPOSITION OF APPLICATIONS TO REFINANCE LOANS ON
1- TO 4-FAMILY AND MANUFACTURED HOME DWELLINGS, BY RACE, ETHNICITY, GENDER AND INCOME OF APPLICANT, 2004

PAGE: 9999
RUN DATE: MM/DD/CCYY

INSTITUTION: XXXXXXXXXX-X XXXXXXXXXXXXXXXXXXXXXXXXXXXX

MSA/MD: 99999 - XXXXXXXXXXXXXXXXXXXXXXXXXXXXXXXXXXXXXXX

ETHNICITY, GENDER AND INCOME 7/ 18/ 19/	APPLICATIONS RECEIVED 20/		LOANS ORIGINATED		APPS. APPROVED BUT NOT ACCEPTED		APPLICATIONS DENIED		APPLICATIONS WITHDRAWN		FILES CLOSED FOR INCOMPLETENESS	
	NUMBER	$000'S	NUMBER	$000'S	NUMBER	$000'S	NUMBER	$000'S	NUMBER	$000'S	NUMBER	$000'S
HISPANIC OR LATINO (TOTAL)	99999999	99999999	99999999	99999999	99999999	99999999	99999999	99999999	99999999	99999999	99999999	99999999
MALE	99999999	99999999	99999999	99999999	99999999	99999999	99999999	99999999	99999999	99999999	99999999	99999999
FEMALE	99999999	99999999	99999999	99999999	99999999	99999999	99999999	99999999	99999999	99999999	99999999	99999999
JOINT (MALE/FEMALE)	99999999	99999999	99999999	99999999	99999999	99999999	99999999	99999999	99999999	99999999	99999999	99999999
NOT HISPANIC OR LATINO (TOTAL)	99999999	99999999	99999999	99999999	99999999	99999999	99999999	99999999	99999999	99999999	99999999	99999999
MALE	99999999	99999999	99999999	99999999	99999999	99999999	99999999	99999999	99999999	99999999	99999999	99999999
FEMALE	99999999	99999999	99999999	99999999	99999999	99999999	99999999	99999999	99999999	99999999	99999999	99999999
JOINT (MALE/FEMALE)	99999999	99999999	99999999	99999999	99999999	99999999	99999999	99999999	99999999	99999999	99999999	99999999
JOINT (HISPANIC OR LATINO/ NOT HISPANIC OR LATINO)(TOTAL)	99999999	99999999	99999999	99999999	99999999	99999999	99999999	99999999	99999999	99999999	99999999	99999999
MALE	99999999	99999999	99999999	99999999	99999999	99999999	99999999	99999999	99999999	99999999	99999999	99999999
FEMALE	99999999	99999999	99999999	99999999	99999999	99999999	99999999	99999999	99999999	99999999	99999999	99999999
JOINT (MALE/FEMALE)	99999999	99999999	99999999	99999999	99999999	99999999	99999999	99999999	99999999	99999999	99999999	99999999
ETHNICITY NOT AVAILABLE (TOTAL) 6/	99999999	99999999	99999999	99999999	99999999	99999999	99999999	99999999	99999999	99999999	99999999	99999999
MALE	99999999	99999999	99999999	99999999	99999999	99999999	99999999	99999999	99999999	99999999	99999999	99999999
FEMALE	99999999	99999999	99999999	99999999	99999999	99999999	99999999	99999999	99999999	99999999	99999999	99999999
JOINT (MALE/FEMALE)	99999999	99999999	99999999	99999999	99999999	99999999	99999999	99999999	99999999	99999999	99999999	99999999
MINORITY STATUS 8/ 18/ 19/												
WHITE NON-HISPANIC (TOTAL)	99999999	99999999	99999999	99999999	99999999	99999999	99999999	99999999	99999999	99999999	99999999	99999999
MALE	99999999	99999999	99999999	99999999	99999999	99999999	99999999	99999999	99999999	99999999	99999999	99999999
FEMALE	99999999	99999999	99999999	99999999	99999999	99999999	99999999	99999999	99999999	99999999	99999999	99999999
JOINT (MALE/FEMALE)	99999999	99999999	99999999	99999999	99999999	99999999	99999999	99999999	99999999	99999999	99999999	99999999
OTHERS, INCLUDING HISPANIC (TOTAL)	99999999	99999999	99999999	99999999	99999999	99999999	99999999	99999999	99999999	99999999	99999999	99999999
MALE	99999999	99999999	99999999	99999999	99999999	99999999	99999999	99999999	99999999	99999999	99999999	99999999
FEMALE	99999999	99999999	99999999	99999999	99999999	99999999	99999999	99999999	99999999	99999999	99999999	99999999
JOINT (MALE/FEMALE)	99999999	99999999	99999999	99999999	99999999	99999999	99999999	99999999	99999999	99999999	99999999	99999999
INCOME OF APPLICANTS 9/												
LESS THAN 50% OF MSA/MD MEDIAN	99999999	99999999	99999999	99999999	99999999	99999999	99999999	99999999	99999999	99999999	99999999	99999999
50-79% OF MSA/MD MEDIAN	99999999	99999999	99999999	99999999	99999999	99999999	99999999	99999999	99999999	99999999	99999999	99999999
80-99% OF MSA/MD MEDIAN	99999999	99999999	99999999	99999999	99999999	99999999	99999999	99999999	99999999	99999999	99999999	99999999
100-119% OF MSA/MD MEDIAN	99999999	99999999	99999999	99999999	99999999	99999999	99999999	99999999	99999999	99999999	99999999	99999999
120% OR MORE OF MSA/MD MEDIAN	99999999	99999999	99999999	99999999	99999999	99999999	99999999	99999999	99999999	99999999	99999999	99999999
INCOME NOT AVAILABLE 6/	99999999	99999999	99999999	99999999	99999999	99999999	99999999	99999999	99999999	99999999	99999999	99999999
TOTAL 14/	99999999	99999999	99999999	99999999	99999999	99999999	99999999	99999999	99999999	99999999	99999999	99999999

TABLE 4-4: DISPOSITION OF APPLICATIONS FOR HOME IMPROVEMENT LOANS, 1- TO 4-FAMILY AND MANUFACTURED HOME DWELLINGS, BY RACE, ETHNICITY, GENDER AND INCOME OF APPLICANT, 2004

PAGE: 9999
RUN DATE: MM/DD/CCYY

INSTITUTION: XXXXXXXXXX-X XXXXXXXXXXXXXXXXXXXXXXXXXXXXX

MSA/MD: 99999 - XXXXXXXXXXXXXXXXXXXXXXXXXXXXXXXXXXXXXXXX

RACE AND GENDER 5/ 18/ 19/	APPLICATIONS RECEIVED 20/		LOANS ORIGINATED		APPS. APPROVED BUT NOT ACCEPTED		APPLICATIONS DENIED		APPLICATIONS WITHDRAWN		FILES CLOSED FOR INCOMPLETENESS	
	NUMBER	$000'S	NUMBER	$000'S	NUMBER	$000'S	NUMBER	$000'S	NUMBER	$000'S	NUMBER	$000'S
AMERICAN INDIAN/ALASKA NATIVE(TOTAL)	99999999	99999999	99999999	99999999	99999999	99999999	99999999	99999999	99999999	99999999	99999999	99999999
MALE	99999999	99999999	99999999	99999999	99999999	99999999	99999999	99999999	99999999	99999999	99999999	99999999
FEMALE	99999999	99999999	99999999	99999999	99999999	99999999	99999999	99999999	99999999	99999999	99999999	99999999
JOINT (MALE/FEMALE)	99999999	99999999	99999999	99999999	99999999	99999999	99999999	99999999	99999999	99999999	99999999	99999999
ASIAN (TOTAL)	99999999	99999999	99999999	99999999	99999999	99999999	99999999	99999999	99999999	99999999	99999999	99999999
MALE	99999999	99999999	99999999	99999999	99999999	99999999	99999999	99999999	99999999	99999999	99999999	99999999
FEMALE	99999999	99999999	99999999	99999999	99999999	99999999	99999999	99999999	99999999	99999999	99999999	99999999
JOINT (MALE/FEMALE)	99999999	99999999	99999999	99999999	99999999	99999999	99999999	99999999	99999999	99999999	99999999	99999999
BLACK OR AFRICAN AMERICAN (TOTAL)	99999999	99999999	99999999	99999999	99999999	99999999	99999999	99999999	99999999	99999999	99999999	99999999
MALE	99999999	99999999	99999999	99999999	99999999	99999999	99999999	99999999	99999999	99999999	99999999	99999999
FEMALE	99999999	99999999	99999999	99999999	99999999	99999999	99999999	99999999	99999999	99999999	99999999	99999999
JOINT (MALE/FEMALE)	99999999	99999999	99999999	99999999	99999999	99999999	99999999	99999999	99999999	99999999	99999999	99999999
NAT HAWAIIAN/OTHER PACIFIC ISL(TOTAL)	99999999	99999999	99999999	99999999	99999999	99999999	99999999	99999999	99999999	99999999	99999999	99999999
MALE	99999999	99999999	99999999	99999999	99999999	99999999	99999999	99999999	99999999	99999999	99999999	99999999
FEMALE	99999999	99999999	99999999	99999999	99999999	99999999	99999999	99999999	99999999	99999999	99999999	99999999
JOINT (MALE/FEMALE)	99999999	99999999	99999999	99999999	99999999	99999999	99999999	99999999	99999999	99999999	99999999	99999999
WHITE (TOTAL)	99999999	99999999	99999999	99999999	99999999	99999999	99999999	99999999	99999999	99999999	99999999	99999999
MALE	99999999	99999999	99999999	99999999	99999999	99999999	99999999	99999999	99999999	99999999	99999999	99999999
FEMALE	99999999	99999999	99999999	99999999	99999999	99999999	99999999	99999999	99999999	99999999	99999999	99999999
JOINT (MALE/FEMALE)	99999999	99999999	99999999	99999999	99999999	99999999	99999999	99999999	99999999	99999999	99999999	99999999
2 OR MORE MINORITY RACES (TOTAL)	99999999	99999999	99999999	99999999	99999999	99999999	99999999	99999999	99999999	99999999	99999999	99999999
MALE	99999999	99999999	99999999	99999999	99999999	99999999	99999999	99999999	99999999	99999999	99999999	99999999
FEMALE	99999999	99999999	99999999	99999999	99999999	99999999	99999999	99999999	99999999	99999999	99999999	99999999
JOINT (MALE/FEMALE)	99999999	99999999	99999999	99999999	99999999	99999999	99999999	99999999	99999999	99999999	99999999	99999999
JOINT (WHITE/MINORITY RACE) (TOTAL)	99999999	99999999	99999999	99999999	99999999	99999999	99999999	99999999	99999999	99999999	99999999	99999999
MALE	99999999	99999999	99999999	99999999	99999999	99999999	99999999	99999999	99999999	99999999	99999999	99999999
FEMALE	99999999	99999999	99999999	99999999	99999999	99999999	99999999	99999999	99999999	99999999	99999999	99999999
JOINT (MALE/FEMALE)	99999999	99999999	99999999	99999999	99999999	99999999	99999999	99999999	99999999	99999999	99999999	99999999
RACE NOT AVAILABLE 6/(TOTAL)	99999999	99999999	99999999	99999999	99999999	99999999	99999999	99999999	99999999	99999999	99999999	99999999
MALE	99999999	99999999	99999999	99999999	99999999	99999999	99999999	99999999	99999999	99999999	99999999	99999999
FEMALE	99999999	99999999	99999999	99999999	99999999	99999999	99999999	99999999	99999999	99999999	99999999	99999999
JOINT (MALE/FEMALE)	99999999	99999999	99999999	99999999	99999999	99999999	99999999	99999999	99999999	99999999	99999999	99999999

TABLE 4-4: DISPOSITION OF APPLICATIONS FOR HOME IMPROVEMENT LOANS,
1- TO 4-FAMILY AND MANUFACTURED HOME DWELLINGS, BY RACE, ETHNICITY, GENDER AND INCOME OF APPLICANT, 2004

PAGE: 9999
RUN DATE: MM/DD/CCYY

INSTITUTION: XXXXXXXXXX-X XXXXXXXXXXXXXXXXXXXXXXXXXXXX

MSA/MD: 99999 - XXXXXXXXXXXXXXXXXXXXXXXXXXXXXXXXXXXXXXX

ETHNICITY, GENDER AND INCOME 7/ 18/ 19/	APPLICATIONS RECEIVED 20/		LOANS ORIGINATED		APPS. APPROVED BUT NOT ACCEPTED		APPLICATIONS DENIED		APPLICATIONS WITHDRAWN		FILES CLOSED FOR INCOMPLETENESS	
	NUMBER	$000'S	NUMBER	$000'S	NUMBER	$000'S	NUMBER	$000'S	NUMBER	$000'S	NUMBER	$000'S
HISPANIC OR LATINO (TOTAL)	99999999	99999999	99999999	99999999	99999999	99999999	99999999	99999999	99999999	99999999	99999999	99999999
MALE	99999999	99999999	99999999	99999999	99999999	99999999	99999999	99999999	99999999	99999999	99999999	99999999
FEMALE	99999999	99999999	99999999	99999999	99999999	99999999	99999999	99999999	99999999	99999999	99999999	99999999
JOINT (MALE/FEMALE)	99999999	99999999	99999999	99999999	99999999	99999999	99999999	99999999	99999999	99999999	99999999	99999999
NOT HISPANIC OR LATINO (TOTAL)	99999999	99999999	99999999	99999999	99999999	99999999	99999999	99999999	99999999	99999999	99999999	99999999
MALE	99999999	99999999	99999999	99999999	99999999	99999999	99999999	99999999	99999999	99999999	99999999	99999999
FEMALE	99999999	99999999	99999999	99999999	99999999	99999999	99999999	99999999	99999999	99999999	99999999	99999999
JOINT (MALE/FEMALE)	99999999	99999999	99999999	99999999	99999999	99999999	99999999	99999999	99999999	99999999	99999999	99999999
JOINT (HISPANIC OR LATINO/ NOT HISPANIC OR LATINO)(TOTAL)	99999999	99999999	99999999	99999999	99999999	99999999	99999999	99999999	99999999	99999999	99999999	99999999
MALE	99999999	99999999	99999999	99999999	99999999	99999999	99999999	99999999	99999999	99999999	99999999	99999999
FEMALE	99999999	99999999	99999999	99999999	99999999	99999999	99999999	99999999	99999999	99999999	99999999	99999999
JOINT (MALE/FEMALE)	99999999	99999999	99999999	99999999	99999999	99999999	99999999	99999999	99999999	99999999	99999999	99999999
ETHNICITY NOT AVAILABLE (TOTAL) 6/	99999999	99999999	99999999	99999999	99999999	99999999	99999999	99999999	99999999	99999999	99999999	99999999
MALE	99999999	99999999	99999999	99999999	99999999	99999999	99999999	99999999	99999999	99999999	99999999	99999999
FEMALE	99999999	99999999	99999999	99999999	99999999	99999999	99999999	99999999	99999999	99999999	99999999	99999999
JOINT (MALE/FEMALE)	99999999	99999999	99999999	99999999	99999999	99999999	99999999	99999999	99999999	99999999	99999999	99999999
MINORITY STATUS 8/ 18/ 19/												
WHITE NON-HISPANIC (TOTAL)	99999999	99999999	99999999	99999999	99999999	99999999	99999999	99999999	99999999	99999999	99999999	99999999
MALE	99999999	99999999	99999999	99999999	99999999	99999999	99999999	99999999	99999999	99999999	99999999	99999999
FEMALE	99999999	99999999	99999999	99999999	99999999	99999999	99999999	99999999	99999999	99999999	99999999	99999999
JOINT (MALE/FEMALE)	99999999	99999999	99999999	99999999	99999999	99999999	99999999	99999999	99999999	99999999	99999999	99999999
OTHERS, INCLUDING HISPANIC (TOTAL)	99999999	99999999	99999999	99999999	99999999	99999999	99999999	99999999	99999999	99999999	99999999	99999999
MALE	99999999	99999999	99999999	99999999	99999999	99999999	99999999	99999999	99999999	99999999	99999999	99999999
FEMALE	99999999	99999999	99999999	99999999	99999999	99999999	99999999	99999999	99999999	99999999	99999999	99999999
JOINT (MALE/FEMALE)	99999999	99999999	99999999	99999999	99999999	99999999	99999999	99999999	99999999	99999999	99999999	99999999
INCOME OF APPLICANTS 9/												
LESS THAN 50% OF MSA/MD MEDIAN	99999999	99999999	99999999	99999999	99999999	99999999	99999999	99999999	99999999	99999999	99999999	99999999
50-79% OF MSA/MD MEDIAN	99999999	99999999	99999999	99999999	99999999	99999999	99999999	99999999	99999999	99999999	99999999	99999999
80-99% OF MSA/MD MEDIAN	99999999	99999999	99999999	99999999	99999999	99999999	99999999	99999999	99999999	99999999	99999999	99999999
100-119% OF MSA/MD MEDIAN	99999999	99999999	99999999	99999999	99999999	99999999	99999999	99999999	99999999	99999999	99999999	99999999
120% OR MORE OF MSA/MD MEDIAN	99999999	99999999	99999999	99999999	99999999	99999999	99999999	99999999	99999999	99999999	99999999	99999999
INCOME NOT AVAILABLE 6/	99999999	99999999	99999999	99999999	99999999	99999999	99999999	99999999	99999999	99999999	99999999	99999999
TOTAL 14/	99999999	99999999	99999999	99999999	99999999	99999999	99999999	99999999	99999999	99999999	99999999	99999999

PAGE: 9999
RUN DATE: MM/DD/CCYY

TABLE 4-5: DISPOSITION OF APPLICATIONS FOR LOANS ON DWELLINGS FOR 5 OR MORE FAMILIES, BY RACE, ETHNICITY, GENDER AND INCOME OF APPLICANT, 2004

INSTITUTION: XXXXXXXXXX-X XXXXXXXXXXXXXXXXXXXXXXXXXXXXX

MSA/MD: 99999 - XXXXXXXXXXXXXXXXXXXXXXXXXXXXXXXXXXXXXXXX

RACE AND GENDER 5/ 18/ 19/	APPLICATIONS RECEIVED 20/		LOANS ORIGINATED		APPS. APPROVED BUT NOT ACCEPTED		APPLICATIONS DENIED		APPLICATIONS WITHDRAWN		FILES CLOSED FOR INCOMPLETENESS	
	NUMBER	$000'S	NUMBER	$000'S	NUMBER	$000'S	NUMBER	$000'S	NUMBER	$000'S	NUMBER	$000'S
AMERICAN INDIAN/ALASKA NATIVE(TOTAL)	99999999	99999999	99999999	99999999	99999999	99999999	99999999	99999999	99999999	99999999	99999999	99999999
MALE	99999999	99999999	99999999	99999999	99999999	99999999	99999999	99999999	99999999	99999999	99999999	99999999
FEMALE	99999999	99999999	99999999	99999999	99999999	99999999	99999999	99999999	99999999	99999999	99999999	99999999
JOINT (MALE/FEMALE)	99999999	99999999	99999999	99999999	99999999	99999999	99999999	99999999	99999999	99999999	99999999	99999999
ASIAN (TOTAL)	99999999	99999999	99999999	99999999	99999999	99999999	99999999	99999999	99999999	99999999	99999999	99999999
MALE	99999999	99999999	99999999	99999999	99999999	99999999	99999999	99999999	99999999	99999999	99999999	99999999
FEMALE	99999999	99999999	99999999	99999999	99999999	99999999	99999999	99999999	99999999	99999999	99999999	99999999
JOINT (MALE/FEMALE)	99999999	99999999	99999999	99999999	99999999	99999999	99999999	99999999	99999999	99999999	99999999	99999999
BLACK OR AFRICAN AMERICAN (TOTAL)	99999999	99999999	99999999	99999999	99999999	99999999	99999999	99999999	99999999	99999999	99999999	99999999
MALE	99999999	99999999	99999999	99999999	99999999	99999999	99999999	99999999	99999999	99999999	99999999	99999999
FEMALE	99999999	99999999	99999999	99999999	99999999	99999999	99999999	99999999	99999999	99999999	99999999	99999999
JOINT (MALE/FEMALE)	99999999	99999999	99999999	99999999	99999999	99999999	99999999	99999999	99999999	99999999	99999999	99999999
NAT HAWAIIAN/OTHER PACIFIC ISL(TOTAL)	99999999	99999999	99999999	99999999	99999999	99999999	99999999	99999999	99999999	99999999	99999999	99999999
MALE	99999999	99999999	99999999	99999999	99999999	99999999	99999999	99999999	99999999	99999999	99999999	99999999
FEMALE	99999999	99999999	99999999	99999999	99999999	99999999	99999999	99999999	99999999	99999999	99999999	99999999
JOINT (MALE/FEMALE)	99999999	99999999	99999999	99999999	99999999	99999999	99999999	99999999	99999999	99999999	99999999	99999999
WHITE (TOTAL)	99999999	99999999	99999999	99999999	99999999	99999999	99999999	99999999	99999999	99999999	99999999	99999999
MALE	99999999	99999999	99999999	99999999	99999999	99999999	99999999	99999999	99999999	99999999	99999999	99999999
FEMALE	99999999	99999999	99999999	99999999	99999999	99999999	99999999	99999999	99999999	99999999	99999999	99999999
JOINT (MALE/FEMALE)	99999999	99999999	99999999	99999999	99999999	99999999	99999999	99999999	99999999	99999999	99999999	99999999
2 OR MORE MINORITY RACES (TOTAL)	99999999	99999999	99999999	99999999	99999999	99999999	99999999	99999999	99999999	99999999	99999999	99999999
MALE	99999999	99999999	99999999	99999999	99999999	99999999	99999999	99999999	99999999	99999999	99999999	99999999
FEMALE	99999999	99999999	99999999	99999999	99999999	99999999	99999999	99999999	99999999	99999999	99999999	99999999
JOINT (MALE/FEMALE)	99999999	99999999	99999999	99999999	99999999	99999999	99999999	99999999	99999999	99999999	99999999	99999999
JOINT (WHITE/MINORITY RACE) (TOTAL)	99999999	99999999	99999999	99999999	99999999	99999999	99999999	99999999	99999999	99999999	99999999	99999999
MALE	99999999	99999999	99999999	99999999	99999999	99999999	99999999	99999999	99999999	99999999	99999999	99999999
FEMALE	99999999	99999999	99999999	99999999	99999999	99999999	99999999	99999999	99999999	99999999	99999999	99999999
JOINT (MALE/FEMALE)	99999999	99999999	99999999	99999999	99999999	99999999	99999999	99999999	99999999	99999999	99999999	99999999
RACE NOT AVAILABLE 6/(TOTAL)	99999999	99999999	99999999	99999999	99999999	99999999	99999999	99999999	99999999	99999999	99999999	99999999
MALE	99999999	99999999	99999999	99999999	99999999	99999999	99999999	99999999	99999999	99999999	99999999	99999999
FEMALE	99999999	99999999	99999999	99999999	99999999	99999999	99999999	99999999	99999999	99999999	99999999	99999999
JOINT (MALE/FEMALE)	99999999	99999999	99999999	99999999	99999999	99999999	99999999	99999999	99999999	99999999	99999999	99999999

TABLE 4-5: DISPOSITION OF APPLICATIONS FOR LOANS ON DWELLINGS FOR 5 OR MORE FAMILIES, BY RACE, ETHNICITY, GENDER, AND INCOME OF APPLICANT, 2004

PAGE: 9999
RUN DATE: MM/DD/CCYY

INSTITUTION: XXXXXXXXXX-X XXXXXXXXXXXXXXXXXXXXXXXXXXXX

MSA/MD: 99999 - XXXXXXXXXXXXXXXXXXXXXXXXXXXXXXXXXXXXXXXX

ETHNICITY, GENDER AND INCOME 7/ 18/ 19/	APPLICATIONS RECEIVED 20/		LOANS ORIGINATED		APPS. APPROVED BUT NOT ACCEPTED		APPLICATIONS DENIED		APPLICATIONS WITHDRAWN		FILES CLOSED FOR INCOMPLETENESS	
	NUMBER	$000'S	NUMBER	$000'S	NUMBER	$000'S	NUMBER	$000'S	NUMBER	$000'S	NUMBER	$000'S
HISPANIC OR LATINO (TOTAL)	99999999	99999999	99999999	99999999	99999999	99999999	99999999	99999999	99999999	99999999	99999999	99999999
MALE	99999999	99999999	99999999	99999999	99999999	99999999	99999999	99999999	99999999	99999999	99999999	99999999
FEMALE	99999999	99999999	99999999	99999999	99999999	99999999	99999999	99999999	99999999	99999999	99999999	99999999
JOINT (MALE/FEMALE)	99999999	99999999	99999999	99999999	99999999	99999999	99999999	99999999	99999999	99999999	99999999	99999999
NOT HISPANIC OR LATINO (TOTAL)	99999999	99999999	99999999	99999999	99999999	99999999	99999999	99999999	99999999	99999999	99999999	99999999
MALE	99999999	99999999	99999999	99999999	99999999	99999999	99999999	99999999	99999999	99999999	99999999	99999999
FEMALE	99999999	99999999	99999999	99999999	99999999	99999999	99999999	99999999	99999999	99999999	99999999	99999999
JOINT (MALE/FEMALE)	99999999	99999999	99999999	99999999	99999999	99999999	99999999	99999999	99999999	99999999	99999999	99999999
JOINT (HISPANIC OR LATINO/ NOT HISPANIC OR LATINO)(TOTAL)	99999999	99999999	99999999	99999999	99999999	99999999	99999999	99999999	99999999	99999999	99999999	99999999
MALE	99999999	99999999	99999999	99999999	99999999	99999999	99999999	99999999	99999999	99999999	99999999	99999999
FEMALE	99999999	99999999	99999999	99999999	99999999	99999999	99999999	99999999	99999999	99999999	99999999	99999999
JOINT (MALE/FEMALE)	99999999	99999999	99999999	99999999	99999999	99999999	99999999	99999999	99999999	99999999	99999999	99999999
ETHNICITY NOT AVAILABLE (TOTAL) 6/	99999999	99999999	99999999	99999999	99999999	99999999	99999999	99999999	99999999	99999999	99999999	99999999
MALE	99999999	99999999	99999999	99999999	99999999	99999999	99999999	99999999	99999999	99999999	99999999	99999999
FEMALE	99999999	99999999	99999999	99999999	99999999	99999999	99999999	99999999	99999999	99999999	99999999	99999999
JOINT (MALE/FEMALE)	99999999	99999999	99999999	99999999	99999999	99999999	99999999	99999999	99999999	99999999	99999999	99999999
MINORITY STATUS 8/ 18/ 19/												
WHITE NON-HISPANIC (TOTAL)	99999999	99999999	99999999	99999999	99999999	99999999	99999999	99999999	99999999	99999999	99999999	99999999
MALE	99999999	99999999	99999999	99999999	99999999	99999999	99999999	99999999	99999999	99999999	99999999	99999999
FEMALE	99999999	99999999	99999999	99999999	99999999	99999999	99999999	99999999	99999999	99999999	99999999	99999999
JOINT (MALE/FEMALE)	99999999	99999999	99999999	99999999	99999999	99999999	99999999	99999999	99999999	99999999	99999999	99999999
OTHERS, INCLUDING HISPANIC (TOTAL)	99999999	99999999	99999999	99999999	99999999	99999999	99999999	99999999	99999999	99999999	99999999	99999999
MALE	99999999	99999999	99999999	99999999	99999999	99999999	99999999	99999999	99999999	99999999	99999999	99999999
FEMALE	99999999	99999999	99999999	99999999	99999999	99999999	99999999	99999999	99999999	99999999	99999999	99999999
JOINT (MALE/FEMALE)	99999999	99999999	99999999	99999999	99999999	99999999	99999999	99999999	99999999	99999999	99999999	99999999
INCOME OF APPLICANTS 9/												
LESS THAN 50% OF MSA/MD MEDIAN	99999999	99999999	99999999	99999999	99999999	99999999	99999999	99999999	99999999	99999999	99999999	99999999
50-79% OF MSA/MD MEDIAN	99999999	99999999	99999999	99999999	99999999	99999999	99999999	99999999	99999999	99999999	99999999	99999999
80-99% OF MSA/MD MEDIAN	99999999	99999999	99999999	99999999	99999999	99999999	99999999	99999999	99999999	99999999	99999999	99999999
100-119% OF MSA/MD MEDIAN	99999999	99999999	99999999	99999999	99999999	99999999	99999999	99999999	99999999	99999999	99999999	99999999
120% OR MORE OF MSA/MD MEDIAN	99999999	99999999	99999999	99999999	99999999	99999999	99999999	99999999	99999999	99999999	99999999	99999999
INCOME NOT AVAILABLE 6/	99999999	99999999	99999999	99999999	99999999	99999999	99999999	99999999	99999999	99999999	99999999	99999999
TOTAL 14/	99999999	99999999	99999999	99999999	99999999	99999999	99999999	99999999	99999999	99999999	99999999	99999999

TABLE 4-6: DISPOSITION OF APPLICATIONS FROM NONOCCUPANTS FOR HOME-PURCHASE, HOME IMPROVEMENT, OR REFINANCING LOANS, 1- TO 4-FAMILY AND MANUFACTURED HOME DWELLINGS, BY RACE, ETHNICITY, GENDER, AND INCOME OF APPLICANT, 2004

PAGE: 9999
RUN DATE: MM/DD/CCYY

INSTITUTION: XXXXXXXXXX-X XXXXXXXXXXXXXXXXXXXXXXXXXXXXXX

MSA/MD: 99999 - XXXXXXXXXXXXXXXXXXXXXXXXXXXXXXXXXXXXXXXX

RACE AND GENDER 5/ 18/ 19/	APPLICATIONS RECEIVED 20/		LOANS ORIGINATED		APPS. APPROVED BUT NOT ACCEPTED		APPLICATIONS DENIED		APPLICATIONS WITHDRAWN		FILES CLOSED FOR INCOMPLETENESS	
	NUMBER	$000'S	NUMBER	$000'S	NUMBER	$000'S	NUMBER	$000'S	NUMBER	$000'S	NUMBER	$000'S
AMERICAN INDIAN/ALASKA NATIVE(TOTAL)	99999999	99999999	99999999	99999999	99999999	99999999	99999999	99999999	99999999	99999999	99999999	99999999
MALE	99999999	99999999	99999999	99999999	99999999	99999999	99999999	99999999	99999999	99999999	99999999	99999999
FEMALE	99999999	99999999	99999999	99999999	99999999	99999999	99999999	99999999	99999999	99999999	99999999	99999999
JOINT (MALE/FEMALE)	99999999	99999999	99999999	99999999	99999999	99999999	99999999	99999999	99999999	99999999	99999999	99999999
ASIAN (TOTAL)	99999999	99999999	99999999	99999999	99999999	99999999	99999999	99999999	99999999	99999999	99999999	99999999
MALE	99999999	99999999	99999999	99999999	99999999	99999999	99999999	99999999	99999999	99999999	99999999	99999999
FEMALE	99999999	99999999	99999999	99999999	99999999	99999999	99999999	99999999	99999999	99999999	99999999	99999999
JOINT (MALE/FEMALE)	99999999	99999999	99999999	99999999	99999999	99999999	99999999	99999999	99999999	99999999	99999999	99999999
BLACK OR AFRICAN AMERICAN (TOTAL)	99999999	99999999	99999999	99999999	99999999	99999999	99999999	99999999	99999999	99999999	99999999	99999999
MALE	99999999	99999999	99999999	99999999	99999999	99999999	99999999	99999999	99999999	99999999	99999999	99999999
FEMALE	99999999	99999999	99999999	99999999	99999999	99999999	99999999	99999999	99999999	99999999	99999999	99999999
JOINT (MALE/FEMALE)	99999999	99999999	99999999	99999999	99999999	99999999	99999999	99999999	99999999	99999999	99999999	99999999
NAT HAWAIIAN/OTHER PACIFIC ISL(TOTAL)	99999999	99999999	99999999	99999999	99999999	99999999	99999999	99999999	99999999	99999999	99999999	99999999
MALE	99999999	99999999	99999999	99999999	99999999	99999999	99999999	99999999	99999999	99999999	99999999	99999999
FEMALE	99999999	99999999	99999999	99999999	99999999	99999999	99999999	99999999	99999999	99999999	99999999	99999999
JOINT (MALE/FEMALE)	99999999	99999999	99999999	99999999	99999999	99999999	99999999	99999999	99999999	99999999	99999999	99999999
WHITE (TOTAL)	99999999	99999999	99999999	99999999	99999999	99999999	99999999	99999999	99999999	99999999	99999999	99999999
MALE	99999999	99999999	99999999	99999999	99999999	99999999	99999999	99999999	99999999	99999999	99999999	99999999
FEMALE	99999999	99999999	99999999	99999999	99999999	99999999	99999999	99999999	99999999	99999999	99999999	99999999
JOINT (MALE/FEMALE)	99999999	99999999	99999999	99999999	99999999	99999999	99999999	99999999	99999999	99999999	99999999	99999999
2 OR MORE MINORITY RACES (TOTAL)	99999999	99999999	99999999	99999999	99999999	99999999	99999999	99999999	99999999	99999999	99999999	99999999
MALE	99999999	99999999	99999999	99999999	99999999	99999999	99999999	99999999	99999999	99999999	99999999	99999999
FEMALE	99999999	99999999	99999999	99999999	99999999	99999999	99999999	99999999	99999999	99999999	99999999	99999999
JOINT (MALE/FEMALE)	99999999	99999999	99999999	99999999	99999999	99999999	99999999	99999999	99999999	99999999	99999999	99999999
JOINT (WHITE/MINORITY RACE) (TOTAL)	99999999	99999999	99999999	99999999	99999999	99999999	99999999	99999999	99999999	99999999	99999999	99999999
MALE	99999999	99999999	99999999	99999999	99999999	99999999	99999999	99999999	99999999	99999999	99999999	99999999
FEMALE	99999999	99999999	99999999	99999999	99999999	99999999	99999999	99999999	99999999	99999999	99999999	99999999
JOINT (MALE/FEMALE)	99999999	99999999	99999999	99999999	99999999	99999999	99999999	99999999	99999999	99999999	99999999	99999999
RACE NOT AVAILABLE 6/(TOTAL)	99999999	99999999	99999999	99999999	99999999	99999999	99999999	99999999	99999999	99999999	99999999	99999999
MALE	99999999	99999999	99999999	99999999	99999999	99999999	99999999	99999999	99999999	99999999	99999999	99999999
FEMALE	99999999	99999999	99999999	99999999	99999999	99999999	99999999	99999999	99999999	99999999	99999999	99999999
JOINT (MALE/FEMALE)	99999999	99999999	99999999	99999999	99999999	99999999	99999999	99999999	99999999	99999999	99999999	99999999

TABLE 4-6: DISPOSITION OF APPLICATIONS FROM NONOCCUPANTS FOR HOME-PURCHASE, HOME IMPROVEMENT, OR REFINANCING LOANS, 1- TO 4-FAMILY AND MANUFACTURED HOME DWELLINMGS, BY RACE, ETHNICITY, GENDER, AND INCOME OF APPLICANT, 2004

PAGE: 9999
RUN DATE: MM/DD/CCYY

INSTITUTION: XXXXXXXXXX-X XXXXXXXXXXXXXXXXXXXXXXXXXXXXX

MSA/MD: 99999 - XXXXXXXXXXXXXXXXXXXXXXXXXXXXXXXXXXXXXXXX

ETHNICITY, GENDER AND INCOME 7/ 18/ 19/	APPLICATIONS RECEIVED 20/		LOANS ORIGINATED		APPS. APPROVED BUT NOT ACCEPTED		APPLICATIONS DENIED		APPLICATIONS WITHDRAWN		FILES CLOSED FOR INCOMPLETENESS	
	NUMBER	$000'S	NUMBER	$000'S	NUMBER	$000'S	NUMBER	$000'S	NUMBER	$000'S	NUMBER	$000'S
HISPANIC OR LATINO (TOTAL)	99999999	99999999	99999999	99999999	99999999	99999999	99999999	99999999	99999999	99999999	99999999	99999999
MALE	99999999	99999999	99999999	99999999	99999999	99999999	99999999	99999999	99999999	99999999	99999999	99999999
FEMALE	99999999	99999999	99999999	99999999	99999999	99999999	99999999	99999999	99999999	99999999	99999999	99999999
JOINT (MALE/FEMALE)	99999999	99999999	99999999	99999999	99999999	99999999	99999999	99999999	99999999	99999999	99999999	99999999
NOT HISPANIC OR LATINO (TOTAL)	99999999	99999999	99999999	99999999	99999999	99999999	99999999	99999999	99999999	99999999	99999999	99999999
MALE	99999999	99999999	99999999	99999999	99999999	99999999	99999999	99999999	99999999	99999999	99999999	99999999
FEMALE	99999999	99999999	99999999	99999999	99999999	99999999	99999999	99999999	99999999	99999999	99999999	99999999
JOINT (MALE/FEMALE)	99999999	99999999	99999999	99999999	99999999	99999999	99999999	99999999	99999999	99999999	99999999	99999999
JOINT (HISPANIC OR LATINO/ NOT HISPANIC OR LATINO)(TOTAL)	99999999	99999999	99999999	99999999	99999999	99999999	99999999	99999999	99999999	99999999	99999999	99999999
MALE	99999999	99999999	99999999	99999999	99999999	99999999	99999999	99999999	99999999	99999999	99999999	99999999
FEMALE	99999999	99999999	99999999	99999999	99999999	99999999	99999999	99999999	99999999	99999999	99999999	99999999
JOINT (MALE/FEMALE)	99999999	99999999	99999999	99999999	99999999	99999999	99999999	99999999	99999999	99999999	99999999	99999999
ETHNICITY NOT AVAILABLE (TOTAL) 6/	99999999	99999999	99999999	99999999	99999999	99999999	99999999	99999999	99999999	99999999	99999999	99999999
MALE	99999999	99999999	99999999	99999999	99999999	99999999	99999999	99999999	99999999	99999999	99999999	99999999
FEMALE	99999999	99999999	99999999	99999999	99999999	99999999	99999999	99999999	99999999	99999999	99999999	99999999
JOINT (MALE/FEMALE)	99999999	99999999	99999999	99999999	99999999	99999999	99999999	99999999	99999999	99999999	99999999	99999999
MINORITY STATUS 8/ 18/ 19/												
WHITE NON-HISPANIC (TOTAL)	99999999	99999999	99999999	99999999	99999999	99999999	99999999	99999999	99999999	99999999	99999999	99999999
MALE	99999999	99999999	99999999	99999999	99999999	99999999	99999999	99999999	99999999	99999999	99999999	99999999
FEMALE	99999999	99999999	99999999	99999999	99999999	99999999	99999999	99999999	99999999	99999999	99999999	99999999
JOINT (MALE/FEMALE)	99999999	99999999	99999999	99999999	99999999	99999999	99999999	99999999	99999999	99999999	99999999	99999999
OTHERS, INCLUDING HISPANIC (TOTAL)	99999999	99999999	99999999	99999999	99999999	99999999	99999999	99999999	99999999	99999999	99999999	99999999
MALE	99999999	99999999	99999999	99999999	99999999	99999999	99999999	99999999	99999999	99999999	99999999	99999999
FEMALE	99999999	99999999	99999999	99999999	99999999	99999999	99999999	99999999	99999999	99999999	99999999	99999999
JOINT (MALE/FEMALE)	99999999	99999999	99999999	99999999	99999999	99999999	99999999	99999999	99999999	99999999	99999999	99999999
INCOME OF APPLICANTS 9/												
LESS THAN 50% OF MSA/MD MEDIAN	99999999	99999999	99999999	99999999	99999999	99999999	99999999	99999999	99999999	99999999	99999999	99999999
50-79% OF MSA/MD MEDIAN	99999999	99999999	99999999	99999999	99999999	99999999	99999999	99999999	99999999	99999999	99999999	99999999
80-99% OF MSA/MD MEDIAN	99999999	99999999	99999999	99999999	99999999	99999999	99999999	99999999	99999999	99999999	99999999	99999999
100-119% OF MSA/MD MEDIAN	99999999	99999999	99999999	99999999	99999999	99999999	99999999	99999999	99999999	99999999	99999999	99999999
120% OR MORE OF MSA/MD MEDIAN	99999999	99999999	99999999	99999999	99999999	99999999	99999999	99999999	99999999	99999999	99999999	99999999
INCOME NOT AVAILABLE 6/	99999999	99999999	99999999	99999999	99999999	99999999	99999999	99999999	99999999	99999999	99999999	99999999
TOTAL 14/	99999999	99999999	99999999	99999999	99999999	99999999	99999999	99999999	99999999	99999999	99999999	99999999

PAGE: 9999
RUN DATE: MM/DD/CCYY

TABLE 4-7: DISPOSITION OF APPLICATIONS FOR HOME-PURCHASE, HOME IMPROVEMENT, OR REFINANCING LOANS, MANUFACTURED HOME DWELLINGS, BY RACE, ETHNICITY, GENDER AND INCOME OF APPLICANT, 2004

INSTITUTION: XXXXXXXXXX-X XXXXXXXXXXXXXXXXXXXXXXXXXXXXX

MSA/MD: 99999 - XXXXXXXXXXXXXXXXXXXXXXXXXXXXXXXXXXXXXXXX

RACE AND GENDER 5/ 18/ 19/	APPLICATIONS RECEIVED 20/		LOANS ORIGINATED		APPS. APPROVED BUT NOT ACCEPTED		APPLICATIONS DENIED		APPLICATIONS WITHDRAWN		FILES CLOSED FOR INCOMPLETENESS	
	NUMBER	$000'S	NUMBER	$000'S	NUMBER	$000'S	NUMBER	$000'S	NUMBER	$000'S	NUMBER	$000'S
AMERICAN INDIAN/ALASKA NATIVE(TOTAL)	99999999	99999999	99999999	99999999	99999999	99999999	99999999	99999999	99999999	99999999	99999999	99999999
MALE	99999999	99999999	99999999	99999999	99999999	99999999	99999999	99999999	99999999	99999999	99999999	99999999
FEMALE	99999999	99999999	99999999	99999999	99999999	99999999	99999999	99999999	99999999	99999999	99999999	99999999
JOINT (MALE/FEMALE)	99999999	99999999	99999999	99999999	99999999	99999999	99999999	99999999	99999999	99999999	99999999	99999999
ASIAN (TOTAL)	99999999	99999999	99999999	99999999	99999999	99999999	99999999	99999999	99999999	99999999	99999999	99999999
MALE	99999999	99999999	99999999	99999999	99999999	99999999	99999999	99999999	99999999	99999999	99999999	99999999
FEMALE	99999999	99999999	99999999	99999999	99999999	99999999	99999999	99999999	99999999	99999999	99999999	99999999
JOINT (MALE/FEMALE)	99999999	99999999	99999999	99999999	99999999	99999999	99999999	99999999	99999999	99999999	99999999	99999999
BLACK OR AFRICAN AMERICAN (TOTAL)	99999999	99999999	99999999	99999999	99999999	99999999	99999999	99999999	99999999	99999999	99999999	99999999
MALE	99999999	99999999	99999999	99999999	99999999	99999999	99999999	99999999	99999999	99999999	99999999	99999999
FEMALE	99999999	99999999	99999999	99999999	99999999	99999999	99999999	99999999	99999999	99999999	99999999	99999999
JOINT (MALE/FEMALE)	99999999	99999999	99999999	99999999	99999999	99999999	99999999	99999999	99999999	99999999	99999999	99999999
NAT HAWAIIAN/OTHER PACIFIC ISL(TOTAL)	99999999	99999999	99999999	99999999	99999999	99999999	99999999	99999999	99999999	99999999	99999999	99999999
MALE	99999999	99999999	99999999	99999999	99999999	99999999	99999999	99999999	99999999	99999999	99999999	99999999
FEMALE	99999999	99999999	99999999	99999999	99999999	99999999	99999999	99999999	99999999	99999999	99999999	99999999
JOINT (MALE/FEMALE)	99999999	99999999	99999999	99999999	99999999	99999999	99999999	99999999	99999999	99999999	99999999	99999999
WHITE (TOTAL)	99999999	99999999	99999999	99999999	99999999	99999999	99999999	99999999	99999999	99999999	99999999	99999999
MALE	99999999	99999999	99999999	99999999	99999999	99999999	99999999	99999999	99999999	99999999	99999999	99999999
FEMALE	99999999	99999999	99999999	99999999	99999999	99999999	99999999	99999999	99999999	99999999	99999999	99999999
JOINT (MALE/FEMALE)	99999999	99999999	99999999	99999999	99999999	99999999	99999999	99999999	99999999	99999999	99999999	99999999
2 OR MORE MINORITY RACES (TOTAL)	99999999	99999999	99999999	99999999	99999999	99999999	99999999	99999999	99999999	99999999	99999999	99999999
MALE	99999999	99999999	99999999	99999999	99999999	99999999	99999999	99999999	99999999	99999999	99999999	99999999
FEMALE	99999999	99999999	99999999	99999999	99999999	99999999	99999999	99999999	99999999	99999999	99999999	99999999
JOINT (MALE/FEMALE)	99999999	99999999	99999999	99999999	99999999	99999999	99999999	99999999	99999999	99999999	99999999	99999999
JOINT (WHITE/MINORITY RACE) (TOTAL)	99999999	99999999	99999999	99999999	99999999	99999999	99999999	99999999	99999999	99999999	99999999	99999999
MALE	99999999	99999999	99999999	99999999	99999999	99999999	99999999	99999999	99999999	99999999	99999999	99999999
FEMALE	99999999	99999999	99999999	99999999	99999999	99999999	99999999	99999999	99999999	99999999	99999999	99999999
JOINT (MALE/FEMALE)	99999999	99999999	99999999	99999999	99999999	99999999	99999999	99999999	99999999	99999999	99999999	99999999
RACE NOT AVAILABLE 6/(TOTAL)	99999999	99999999	99999999	99999999	99999999	99999999	99999999	99999999	99999999	99999999	99999999	99999999
MALE	99999999	99999999	99999999	99999999	99999999	99999999	99999999	99999999	99999999	99999999	99999999	99999999
FEMALE	99999999	99999999	99999999	99999999	99999999	99999999	99999999	99999999	99999999	99999999	99999999	99999999
JOINT (MALE/FEMALE)	99999999	99999999	99999999	99999999	99999999	99999999	99999999	99999999	99999999	99999999	99999999	99999999

TABLE 4-7: DISPOSITION OF APPLICATIONS FOR HOME-PURCHASE, HOME IMPROVEMENT, OR REFINANCING LOANS, MANUFACTURED HOME DWELLINGS, BY RACE, ETHNICITY, GENDER, AND INCOME OF APPLICANT, 2004

PAGE: 9999
RUN DATE: MM/DD/CCYY

INSTITUTION: XXXXXXXXXX-X XXXXXXXXXXXXXXXXXXXXXXXXXXXXX

MSA/MD: 99999 - XXXXXXXXXXXXXXXXXXXXXXXXXXXXXXXXXXXXXXXX

ETHNICITY, GENDER AND INCOME 7/ 18/ 19/	APPLICATIONS RECEIVED 20/		LOANS ORIGINATED		APPS. APPROVED BUT NOT ACCEPTED		APPLICATIONS DENIED		APPLICATIONS WITHDRAWN		FILES CLOSED FOR INCOMPLETENESS	
	NUMBER	$000'S	NUMBER	$000'S	NUMBER	$000'S	NUMBER	$000'S	NUMBER	$000'S	NUMBER	$000'S
HISPANIC OR LATINO (TOTAL)	99999999	99999999	99999999	99999999	99999999	99999999	99999999	99999999	99999999	99999999	99999999	99999999
MALE	99999999	99999999	99999999	99999999	99999999	99999999	99999999	99999999	99999999	99999999	99999999	99999999
FEMALE	99999999	99999999	99999999	99999999	99999999	99999999	99999999	99999999	99999999	99999999	99999999	99999999
JOINT (MALE/FEMALE)	99999999	99999999	99999999	99999999	99999999	99999999	99999999	99999999	99999999	99999999	99999999	99999999
NOT HISPANIC OR LATINO (TOTAL)	99999999	99999999	99999999	99999999	99999999	99999999	99999999	99999999	99999999	99999999	99999999	99999999
MALE	99999999	99999999	99999999	99999999	99999999	99999999	99999999	99999999	99999999	99999999	99999999	99999999
FEMALE	99999999	99999999	99999999	99999999	99999999	99999999	99999999	99999999	99999999	99999999	99999999	99999999
JOINT (MALE/FEMALE)	99999999	99999999	99999999	99999999	99999999	99999999	99999999	99999999	99999999	99999999	99999999	99999999
JOINT (HISPANIC OR LATINO/ NOT HISPANIC OR LATINO) (TOTAL)	99999999	99999999	99999999	99999999	99999999	99999999	99999999	99999999	99999999	99999999	99999999	99999999
MALE	99999999	99999999	99999999	99999999	99999999	99999999	99999999	99999999	99999999	99999999	99999999	99999999
FEMALE	99999999	99999999	99999999	99999999	99999999	99999999	99999999	99999999	99999999	99999999	99999999	99999999
JOINT (MALE/FEMALE)	99999999	99999999	99999999	99999999	99999999	99999999	99999999	99999999	99999999	99999999	99999999	99999999
ETHNICITY NOT AVAILABLE (TOTAL) 6/	99999999	99999999	99999999	99999999	99999999	99999999	99999999	99999999	99999999	99999999	99999999	99999999
MALE	99999999	99999999	99999999	99999999	99999999	99999999	99999999	99999999	99999999	99999999	99999999	99999999
FEMALE	99999999	99999999	99999999	99999999	99999999	99999999	99999999	99999999	99999999	99999999	99999999	99999999
JOINT (MALE/FEMALE)	99999999	99999999	99999999	99999999	99999999	99999999	99999999	99999999	99999999	99999999	99999999	99999999
MINORITY STATUS 8/ 18/ 19/												
WHITE NON-HISPANIC (TOTAL)	99999999	99999999	99999999	99999999	99999999	99999999	99999999	99999999	99999999	99999999	99999999	99999999
MALE	99999999	99999999	99999999	99999999	99999999	99999999	99999999	99999999	99999999	99999999	99999999	99999999
FEMALE	99999999	99999999	99999999	99999999	99999999	99999999	99999999	99999999	99999999	99999999	99999999	99999999
JOINT (MALE/FEMALE)	99999999	99999999	99999999	99999999	99999999	99999999	99999999	99999999	99999999	99999999	99999999	99999999
OTHERS, INCLUDING HISPANIC (TOTAL)	99999999	99999999	99999999	99999999	99999999	99999999	99999999	99999999	99999999	99999999	99999999	99999999
MALE	99999999	99999999	99999999	99999999	99999999	99999999	99999999	99999999	99999999	99999999	99999999	99999999
FEMALE	99999999	99999999	99999999	99999999	99999999	99999999	99999999	99999999	99999999	99999999	99999999	99999999
JOINT (MALE/FEMALE)	99999999	99999999	99999999	99999999	99999999	99999999	99999999	99999999	99999999	99999999	99999999	99999999
INCOME OF APPLICANTS 9/												
LESS THAN 50% OF MSA/MD MEDIAN	99999999	99999999	99999999	99999999	99999999	99999999	99999999	99999999	99999999	99999999	99999999	99999999
50-79% OF MSA/MD MEDIAN	99999999	99999999	99999999	99999999	99999999	99999999	99999999	99999999	99999999	99999999	99999999	99999999
80-99% OF MSA/MD MEDIAN	99999999	99999999	99999999	99999999	99999999	99999999	99999999	99999999	99999999	99999999	99999999	99999999
100-119% OF MSA/MD MEDIAN	99999999	99999999	99999999	99999999	99999999	99999999	99999999	99999999	99999999	99999999	99999999	99999999
120% OR MORE OF MSA/MD MEDIAN	99999999	99999999	99999999	99999999	99999999	99999999	99999999	99999999	99999999	99999999	99999999	99999999
INCOME NOT AVAILABLE 6/	99999999	99999999	99999999	99999999	99999999	99999999	99999999	99999999	99999999	99999999	99999999	99999999
TOTAL 14/	99999999	99999999	99999999	99999999	99999999	99999999	99999999	99999999	99999999	99999999	99999999	99999999

TABLE 5-1: DISPOSITION OF APPLICATIONS FOR FHA, FSA/RHS, AND VA HOME-PURCHASE LOANS, 1- TO 4-FAMILY AND MANUFACTURED HOME DWELLINGS, BY INCOME, RACE AND ETHNICITY OF APPLICANT, 2004

PAGE: 9999
RUN DATE: MM/DD/CCYY

INSTITUTION: XXXXXXXXXX-X XXXXXXXXXXXXXXXXXXXXXXXXXXXXX

MSA/MD: 99999 - XXXXXXXXXXXXXXXXXXXXXXXXXXXXXXXXXXXXXXXX

INCOME, RACE AND ETHNICITY	APPLICATIONS RECEIVED 20/		LOANS ORIGINATED		APPS. APPROVED BUT NOT ACCEPTED		APPLICATIONS DENIED		APPLICATIONS WITHDRAWN		FILES CLOSED FOR INCOMPLETENESS	
	NUMBER	$000'S	NUMBER	$000'S	NUMBER	$000'S	NUMBER	$000'S	NUMBER	$000'S	NUMBER	$000'S
LESS THAN 50% OF MSA/MD MEDIAN												
RACE 5/												
AMERICAN INDIAN/ALASKA NATIVE	99999999	99999999	99999999	99999999	99999999	99999999	99999999	99999999	99999999	99999999	99999999	99999999
ASIAN	99999999	99999999	99999999	99999999	99999999	99999999	99999999	99999999	99999999	99999999	99999999	99999999
BLACK OR AFRICAN AMERICAN	99999999	99999999	99999999	99999999	99999999	99999999	99999999	99999999	99999999	99999999	99999999	99999999
NATIVE HAWAIIAN/OTHER PACIFIC ISL	99999999	99999999	99999999	99999999	99999999	99999999	99999999	99999999	99999999	99999999	99999999	99999999
WHITE	99999999	99999999	99999999	99999999	99999999	99999999	99999999	99999999	99999999	99999999	99999999	99999999
2 OR MORE MINORITY RACES	99999999	99999999	99999999	99999999	99999999	99999999	99999999	99999999	99999999	99999999	99999999	99999999
JOINT (WHITE/MINORITY RACE)	99999999	99999999	99999999	99999999	99999999	99999999	99999999	99999999	99999999	99999999	99999999	99999999
RACE NOT AVAILABLE 6/	99999999	99999999	99999999	99999999	99999999	99999999	99999999	99999999	99999999	99999999	99999999	99999999
ETHNICITY 7/												
HISPANIC OR LATINO	99999999	99999999	99999999	99999999	99999999	99999999	99999999	99999999	99999999	99999999	99999999	99999999
NOT HISPANIC OR LATINO	99999999	99999999	99999999	99999999	99999999	99999999	99999999	99999999	99999999	99999999	99999999	99999999
JOINT (HISPANIC OR LATINO/ NOT HISPANIC OR LATINO)	99999999	99999999	99999999	99999999	99999999	99999999	99999999	99999999	99999999	99999999	99999999	99999999
ETHNICITY NOT AVAILABLE 6/	99999999	99999999	99999999	99999999	99999999	99999999	99999999	99999999	99999999	99999999	99999999	99999999
MINORITY STATUS 8/												
WHITE NON-HISPANIC	99999999	99999999	99999999	99999999	99999999	99999999	99999999	99999999	99999999	99999999	99999999	99999999
OTHERS, INCLUDING HISPANIC	99999999	99999999	99999999	99999999	99999999	99999999	99999999	99999999	99999999	99999999	99999999	99999999
50-79% OF MSA/MD MEDIAN												
RACE 5/												
AMERICAN INDIAN/ALASKA NATIVE	99999999	99999999	99999999	99999999	99999999	99999999	99999999	99999999	99999999	99999999	99999999	99999999
ASIAN	99999999	99999999	99999999	99999999	99999999	99999999	99999999	99999999	99999999	99999999	99999999	99999999
BLACK OR AFRICAN AMERICAN	99999999	99999999	99999999	99999999	99999999	99999999	99999999	99999999	99999999	99999999	99999999	99999999
NATIVE HAWAIIAN/OTHER PACIFIC ISL	99999999	99999999	99999999	99999999	99999999	99999999	99999999	99999999	99999999	99999999	99999999	99999999
WHITE	99999999	99999999	99999999	99999999	99999999	99999999	99999999	99999999	99999999	99999999	99999999	99999999
2 OR MORE MINORITY RACES	99999999	99999999	99999999	99999999	99999999	99999999	99999999	99999999	99999999	99999999	99999999	99999999
JOINT (WHITE/MINORITY RACE)	99999999	99999999	99999999	99999999	99999999	99999999	99999999	99999999	99999999	99999999	99999999	99999999
RACE NOT AVAILABLE 6/	99999999	99999999	99999999	99999999	99999999	99999999	99999999	99999999	99999999	99999999	99999999	99999999
ETHNICITY 7/												
HISPANIC OR LATINO	99999999	99999999	99999999	99999999	99999999	99999999	99999999	99999999	99999999	99999999	99999999	99999999
NOT HISPANIC OR LATINO	99999999	99999999	99999999	99999999	99999999	99999999	99999999	99999999	99999999	99999999	99999999	99999999
JOINT (HISPANIC OR LATINO/ NOT HISPANIC OR LATINO)	99999999	99999999	99999999	99999999	99999999	99999999	99999999	99999999	99999999	99999999	99999999	99999999
ETHNICITY NOT AVAILABLE 6/	99999999	99999999	99999999	99999999	99999999	99999999	99999999	99999999	99999999	99999999	99999999	99999999
MINORITY STATUS 8/												
WHITE NON-HISPANIC	99999999	99999999	99999999	99999999	99999999	99999999	99999999	99999999	99999999	99999999	99999999	99999999
OTHERS, INCLUDING HISPANIC	99999999	99999999	99999999	99999999	99999999	99999999	99999999	99999999	99999999	99999999	99999999	99999999

TABLE 5-1: DISPOSITION OF APPLICATIONS FOR FHA, FSA/RHS, AND VA HOME-PURCHASE LOANS, 1- TO 4-FAMILY AND MANUFACTURED HOME DWELLINGS, BY INCOME, RACE AND ETHNICITY OF APPLICANT, 2004

PAGE: 9999
RUN DATE: MM/DD/CCYY

INSTITUTION: XXXXXXXXXX-X XXXXXXXXXXXXXXXXXXXXXXXXXXXXXX

MSA/MD: 99999 - XXXXXXXXXXXXXXXXXXXXXXXXXXXXXXXXXXXXXXXX

INCOME, RACE AND ETHNICITY CONTINUED	APPLICATIONS RECEIVED 20/		LOANS ORIGINATED		APPS. APPROVED BUT NOT ACCEPTED		APPLICATIONS DENIED		APPLICATIONS WITHDRAWN		FILES CLOSED FOR INCOMPLETENESS	
	NUMBER	$000'S	NUMBER	$000'S	NUMBER	$000'S	NUMBER	$000'S	NUMBER	$000'S	NUMBER	$000'S
80-99% OF MSA/MD MEDIAN												
RACE 5/												
AMERICAN INDIAN/ALASKA NATIVE	99999999	99999999	99999999	99999999	99999999	99999999	99999999	99999999	99999999	99999999	99999999	99999999
ASIAN	99999999	99999999	99999999	99999999	99999999	99999999	99999999	99999999	99999999	99999999	99999999	99999999
BLACK OR AFRICAN AMERICAN	99999999	99999999	99999999	99999999	99999999	99999999	99999999	99999999	99999999	99999999	99999999	99999999
NATIVE HAWAIIAN/OTHER PACIFIC ISL	99999999	99999999	99999999	99999999	99999999	99999999	99999999	99999999	99999999	99999999	99999999	99999999
WHITE	99999999	99999999	99999999	99999999	99999999	99999999	99999999	99999999	99999999	99999999	99999999	99999999
2 OR MORE MINORITY RACES	99999999	99999999	99999999	99999999	99999999	99999999	99999999	99999999	99999999	99999999	99999999	99999999
JOINT (WHITE/MINORITY RACE)	99999999	99999999	99999999	99999999	99999999	99999999	99999999	99999999	99999999	99999999	99999999	99999999
RACE NOT AVAILABLE 6/	99999999	99999999	99999999	99999999	99999999	99999999	99999999	99999999	99999999	99999999	99999999	99999999
ETHNICITY 7/												
HISPANIC OR LATINO	99999999	99999999	99999999	99999999	99999999	99999999	99999999	99999999	99999999	99999999	99999999	99999999
NOT HISPANIC OR LATINO	99999999	99999999	99999999	99999999	99999999	99999999	99999999	99999999	99999999	99999999	99999999	99999999
JOINT (HISPANIC OR LATINO/ NOT HISPANIC OR LATINO)	99999999	99999999	99999999	99999999	99999999	99999999	99999999	99999999	99999999	99999999	99999999	99999999
ETHNICITY NOT AVAILABLE 6/	99999999	99999999	99999999	99999999	99999999	99999999	99999999	99999999	99999999	99999999	99999999	99999999
MINORITY STATUS 8/												
WHITE NON-HISPANIC	99999999	99999999	99999999	99999999	99999999	99999999	99999999	99999999	99999999	99999999	99999999	99999999
OTHERS, INCLUDING HISPANIC	99999999	99999999	99999999	99999999	99999999	99999999	99999999	99999999	99999999	99999999	99999999	99999999
100-119% OF MSA/MD MEDIAN												
RACE 5/												
AMERICAN INDIAN/ALASKA NATIVE	99999999	99999999	99999999	99999999	99999999	99999999	99999999	99999999	99999999	99999999	99999999	99999999
ASIAN	99999999	99999999	99999999	99999999	99999999	99999999	99999999	99999999	99999999	99999999	99999999	99999999
BLACK OR AFRICAN AMERICAN	99999999	99999999	99999999	99999999	99999999	99999999	99999999	99999999	99999999	99999999	99999999	99999999
NATIVE HAWAIIAN/OTHER PACIFIC ISL	99999999	99999999	99999999	99999999	99999999	99999999	99999999	99999999	99999999	99999999	99999999	99999999
WHITE	99999999	99999999	99999999	99999999	99999999	99999999	99999999	99999999	99999999	99999999	99999999	99999999
2 OR MORE MINORITY RACES	99999999	99999999	99999999	99999999	99999999	99999999	99999999	99999999	99999999	99999999	99999999	99999999
JOINT (WHITE/MINORITY RACE)	99999999	99999999	99999999	99999999	99999999	99999999	99999999	99999999	99999999	99999999	99999999	99999999
RACE NOT AVAILABLE 6/	99999999	99999999	99999999	99999999	99999999	99999999	99999999	99999999	99999999	99999999	99999999	99999999
ETHNICITY 7/												
HISPANIC OR LATINO	99999999	99999999	99999999	99999999	99999999	99999999	99999999	99999999	99999999	99999999	99999999	99999999
NOT HISPANIC OR LATINO	99999999	99999999	99999999	99999999	99999999	99999999	99999999	99999999	99999999	99999999	99999999	99999999
JOINT (HISPANIC OR LATINO/ NOT HISPANIC OR LATINO)	99999999	99999999	99999999	99999999	99999999	99999999	99999999	99999999	99999999	99999999	99999999	99999999
ETHNICITY NOT AVAILABLE 6/	99999999	99999999	99999999	99999999	99999999	99999999	99999999	99999999	99999999	99999999	99999999	99999999
MINORITY STATUS 8/												
WHITE NON-HISPANIC	99999999	99999999	99999999	99999999	99999999	99999999	99999999	99999999	99999999	99999999	99999999	99999999
OTHERS, INCLUDING HISPANIC	99999999	99999999	99999999	99999999	99999999	99999999	99999999	99999999	99999999	99999999	99999999	99999999

TABLE 5-1: DISPOSITION OF APPLICATIONS FOR FHA, FSA/RHS, AND VA HOME-PURCHASE LOANS, 1- TO 4-FAMILY AND MANUFACTURED HOME DWELLINGS, BY INCOME, RACE AND ETHNICITY OF APPLICANT, 2004

PAGE: 9999
RUN DATE: MM/DD/CCYY

INSTITUTION: XXXXXXXXXX-X XXXXXXXXXXXXXXXXXXXXXXXXXXXX

MSA/MD: 99999 - XXXXXXXXXXXXXXXXXXXXXXXXXXXXXXXXXXXXXXXX

INCOME, RACE AND ETHNICITY CONTINUED	APPLICATIONS RECEIVED 20/		LOANS ORIGINATED		APPS. APPROVED BUT NOT ACCEPTED		APPLICATIONS DENIED		APPLICATIONS WITHDRAWN		FILES CLOSED FOR INCOMPLETENESS	
	NUMBER	$000'S	NUMBER	$000'S	NUMBER	$000'S	NUMBER	$000'S	NUMBER	$000'S	NUMBER	$000'S
120% OR MORE OF MSA/MD MEDIAN												
RACE 5/												
AMERICAN INDIAN/ALASKA NATIVE	99999999	99999999	99999999	99999999	99999999	99999999	99999999	99999999	99999999	99999999	99999999	99999999
ASIAN	99999999	99999999	99999999	99999999	99999999	99999999	99999999	99999999	99999999	99999999	99999999	99999999
BLACK OR AFRICAN AMERICAN	99999999	99999999	99999999	99999999	99999999	99999999	99999999	99999999	99999999	99999999	99999999	99999999
NATIVE HAWAIIAN/OTHER PACIFIC ISL	99999999	99999999	99999999	99999999	99999999	99999999	99999999	99999999	99999999	99999999	99999999	99999999
WHITE	99999999	99999999	99999999	99999999	99999999	99999999	99999999	99999999	99999999	99999999	99999999	99999999
2 OR MORE MINORITY RACES	99999999	99999999	99999999	99999999	99999999	99999999	99999999	99999999	99999999	99999999	99999999	99999999
JOINT (WHITE/MINORITY RACE)	99999999	99999999	99999999	99999999	99999999	99999999	99999999	99999999	99999999	99999999	99999999	99999999
RACE NOT AVAILABLE 6/	99999999	99999999	99999999	99999999	99999999	99999999	99999999	99999999	99999999	99999999	99999999	99999999
ETHNICITY 7/												
HISPANIC OR LATINO	99999999	99999999	99999999	99999999	99999999	99999999	99999999	99999999	99999999	99999999	99999999	99999999
NOT HISPANIC OR LATINO	99999999	99999999	99999999	99999999	99999999	99999999	99999999	99999999	99999999	99999999	99999999	99999999
JOINT (HISPANIC OR LATINO/ NOT HISPANIC OR LATINO)	99999999	99999999	99999999	99999999	99999999	99999999	99999999	99999999	99999999	99999999	99999999	99999999
ETHNICITY NOT AVAILABLE 6/	99999999	99999999	99999999	99999999	99999999	99999999	99999999	99999999	99999999	99999999	99999999	99999999
MINORITY STATUS 8/												
WHITE NON-HISPANIC	99999999	99999999	99999999	99999999	99999999	99999999	99999999	99999999	99999999	99999999	99999999	99999999
OTHERS, INCLUDING HISPANIC	99999999	99999999	99999999	99999999	99999999	99999999	99999999	99999999	99999999	99999999	99999999	99999999
TOTAL 14/	99999999	99999999	99999999	99999999	99999999	99999999	99999999	99999999	99999999	99999999	99999999	99999999

TABLE 5-2: DISPOSITION OF APPLICATIONS FOR CONVENTIONAL HOME-PURCHASE LOANS, 1- TO 4-FAMILY AND MANUFACTURED HOME DWELLING, BY INCOME, RACE AND ETHNICITY OF APPLICANT, 2004

PAGE: 9999
RUN DATE: MM/DD/CCYY

INSTITUTION: XXXXXXXXXX-X XXXXXXXXXXXXXXXXXXXXXXXXXXXX

MSA/MD: 99999 - XXXXXXXXXXXXXXXXXXXXXXXXXXXXXXXXXXXXXXXX

INCOME, RACE AND ETHNICITY	APPLICATIONS RECEIVED 20/		LOANS ORIGINATED		APPS. APPROVED BUT NOT ACCEPTED		APPLICATIONS DENIED		APPLICATIONS WITHDRAWN		FILES CLOSED FOR INCOMPLETENESS	
	NUMBER	$000'S	NUMBER	$000'S	NUMBER	$000'S	NUMBER	$000'S	NUMBER	$000'S	NUMBER	$000'S
LESS THAN 50% OF MSA/MD MEDIAN												
RACE 5/												
AMERICAN INDIAN/ALASKA NATIVE	99999999	99999999	99999999	99999999	99999999	99999999	99999999	99999999	99999999	99999999	99999999	99999999
ASIAN	99999999	99999999	99999999	99999999	99999999	99999999	99999999	99999999	99999999	99999999	99999999	99999999
BLACK OR AFRICAN AMERICAN	99999999	99999999	99999999	99999999	99999999	99999999	99999999	99999999	99999999	99999999	99999999	99999999
NATIVE HAWAIIAN/OTHER PACIFIC ISL	99999999	99999999	99999999	99999999	99999999	99999999	99999999	99999999	99999999	99999999	99999999	99999999
WHITE	99999999	99999999	99999999	99999999	99999999	99999999	99999999	99999999	99999999	99999999	99999999	99999999
2 OR MORE MINORITY RACES	99999999	99999999	99999999	99999999	99999999	99999999	99999999	99999999	99999999	99999999	99999999	99999999
JOINT (WHITE/MINORITY RACE)	99999999	99999999	99999999	99999999	99999999	99999999	99999999	99999999	99999999	99999999	99999999	99999999
RACE NOT AVAILABLE 6/	99999999	99999999	99999999	99999999	99999999	99999999	99999999	99999999	99999999	99999999	99999999	99999999
ETHNICITY 7/												
HISPANIC OR LATINO	99999999	99999999	99999999	99999999	99999999	99999999	99999999	99999999	99999999	99999999	99999999	99999999
NOT HISPANIC OR LATINO	99999999	99999999	99999999	99999999	99999999	99999999	99999999	99999999	99999999	99999999	99999999	99999999
JOINT (HISPANIC OR LATINO/ NOT HISPANIC OR LATINO)	99999999	99999999	99999999	99999999	99999999	99999999	99999999	99999999	99999999	99999999	99999999	99999999
ETHNICITY NOT AVAILABLE 6/	99999999	99999999	99999999	99999999	99999999	99999999	99999999	99999999	99999999	99999999	99999999	99999999
MINORITY STATUS 8/												
WHITE NON-HISPANIC	99999999	99999999	99999999	99999999	99999999	99999999	99999999	99999999	99999999	99999999	99999999	99999999
OTHERS, INCLUDING HISPANIC	99999999	99999999	99999999	99999999	99999999	99999999	99999999	99999999	99999999	99999999	99999999	99999999
50-79% OF MSA/MD MEDIAN												
RACE 5/												
AMERICAN INDIAN/ALASKA NATIVE	99999999	99999999	99999999	99999999	99999999	99999999	99999999	99999999	99999999	99999999	99999999	99999999
ASIAN	99999999	99999999	99999999	99999999	99999999	99999999	99999999	99999999	99999999	99999999	99999999	99999999
BLACK OR AFRICAN AMERICAN	99999999	99999999	99999999	99999999	99999999	99999999	99999999	99999999	99999999	99999999	99999999	99999999
NATIVE HAWAIIAN/OTHER PACIFIC ISL	99999999	99999999	99999999	99999999	99999999	99999999	99999999	99999999	99999999	99999999	99999999	99999999
WHITE	99999999	99999999	99999999	99999999	99999999	99999999	99999999	99999999	99999999	99999999	99999999	99999999
2 OR MORE MINORITY RACES	99999999	99999999	99999999	99999999	99999999	99999999	99999999	99999999	99999999	99999999	99999999	99999999
JOINT (WHITE/MINORITY RACE)	99999999	99999999	99999999	99999999	99999999	99999999	99999999	99999999	99999999	99999999	99999999	99999999
RACE NOT AVAILABLE 6/	99999999	99999999	99999999	99999999	99999999	99999999	99999999	99999999	99999999	99999999	99999999	99999999
ETHNICITY 7/												
HISPANIC OR LATINO	99999999	99999999	99999999	99999999	99999999	99999999	99999999	99999999	99999999	99999999	99999999	99999999
NOT HISPANIC OR LATINO	99999999	99999999	99999999	99999999	99999999	99999999	99999999	99999999	99999999	99999999	99999999	99999999
JOINT (HISPANIC OR LATINO/ NOT HISPANIC OR LATINO)	99999999	99999999	99999999	99999999	99999999	99999999	99999999	99999999	99999999	99999999	99999999	99999999
ETHNICITY NOT AVAILABLE 6/	99999999	99999999	99999999	99999999	99999999	99999999	99999999	99999999	99999999	99999999	99999999	99999999
MINORITY STATUS 8/												
WHITE NON-HISPANIC	99999999	99999999	99999999	99999999	99999999	99999999	99999999	99999999	99999999	99999999	99999999	99999999
OTHERS, INCLUDING HISPANIC	99999999	99999999	99999999	99999999	99999999	99999999	99999999	99999999	99999999	99999999	99999999	99999999

TABLE 5-2: DISPOSITION OF APPLICATIONS FOR CONVENTIONAL HOME-PURCHASE LOANS,
1- TO 4-FAMILY AND MANUFACTURED HOME DWELLINGS, BY INCOME, RACE AND ETHNICITY OF APPLICANT, 2004

PAGE: 9999
RUN DATE: MM/DD/CCYY

INSTITUTION: XXXXXXXXXX-X XXXXXXXXXXXXXXXXXXXXXXXXXXXXXX

MSA/MD: 99999 - XXXXXXXXXXXXXXXXXXXXXXXXXXXXXXXXXXXXXXXXXXXX

INCOME, RACE AND ETHNICITY CONTINUED	APPLICATIONS RECEIVED 20/		LOANS ORIGINATED		APPS. APPROVED BUT NOT ACCEPTED		APPLICATIONS DENIED		APPLICATIONS WITHDRAWN		FILES CLOSED FOR INCOMPLETENESS	
	NUMBER	$000'S	NUMBER	$000'S	NUMBER	$000'S	NUMBER	$000'S	NUMBER	$000'S	NUMBER	$000'S
80-99% OF MSA/MD MEDIAN												
RACE 5/												
AMERICAN INDIAN/ALASKA NATIVE	99999999	99999999	99999999	99999999	99999999	99999999	99999999	99999999	99999999	99999999	99999999	99999999
ASIAN	99999999	99999999	99999999	99999999	99999999	99999999	99999999	99999999	99999999	99999999	99999999	99999999
BLACK OR AFRICAN AMERICAN	99999999	99999999	99999999	99999999	99999999	99999999	99999999	99999999	99999999	99999999	99999999	99999999
NATIVE HAWAIIAN/OTHER PACIFIC ISL	99999999	99999999	99999999	99999999	99999999	99999999	99999999	99999999	99999999	99999999	99999999	99999999
WHITE	99999999	99999999	99999999	99999999	99999999	99999999	99999999	99999999	99999999	99999999	99999999	99999999
2 OR MORE MINORITY RACES	99999999	99999999	99999999	99999999	99999999	99999999	99999999	99999999	99999999	99999999	99999999	99999999
JOINT (WHITE/MINORITY RACE)	99999999	99999999	99999999	99999999	99999999	99999999	99999999	99999999	99999999	99999999	99999999	99999999
RACE NOT AVAILABLE 6/	99999999	99999999	99999999	99999999	99999999	99999999	99999999	99999999	99999999	99999999	99999999	99999999
ETHNICITY 7/												
HISPANIC OR LATINO	99999999	99999999	99999999	99999999	99999999	99999999	99999999	99999999	99999999	99999999	99999999	99999999
NOT HISPANIC OR LATINO	99999999	99999999	99999999	99999999	99999999	99999999	99999999	99999999	99999999	99999999	99999999	99999999
JOINT (HISPANIC OR LATINO/ NOT HISPANIC OR LATINO)	99999999	99999999	99999999	99999999	99999999	99999999	99999999	99999999	99999999	99999999	99999999	99999999
ETHNICITY NOT AVAILABLE 6/	99999999	99999999	99999999	99999999	99999999	99999999	99999999	99999999	99999999	99999999	99999999	99999999
MINORITY STATUS 8/												
WHITE NON-HISPANIC	99999999	99999999	99999999	99999999	99999999	99999999	99999999	99999999	99999999	99999999	99999999	99999999
OTHERS, INCLUDING HISPANIC	99999999	99999999	99999999	99999999	99999999	99999999	99999999	99999999	99999999	99999999	99999999	99999999
100-119% OF MSA/MD MEDIAN												
RACE 5/												
AMERICAN INDIAN/ALASKA NATIVE	99999999	99999999	99999999	99999999	99999999	99999999	99999999	99999999	99999999	99999999	99999999	99999999
ASIAN	99999999	99999999	99999999	99999999	99999999	99999999	99999999	99999999	99999999	99999999	99999999	99999999
BLACK OR AFRICAN AMERICAN	99999999	99999999	99999999	99999999	99999999	99999999	99999999	99999999	99999999	99999999	99999999	99999999
NATIVE HAWAIIAN/OTHER PACIFIC ISL	99999999	99999999	99999999	99999999	99999999	99999999	99999999	99999999	99999999	99999999	99999999	99999999
WHITE	99999999	99999999	99999999	99999999	99999999	99999999	99999999	99999999	99999999	99999999	99999999	99999999
2 OR MORE MINORITY RACES	99999999	99999999	99999999	99999999	99999999	99999999	99999999	99999999	99999999	99999999	99999999	99999999
JOINT (WHITE/MINORITY RACE)	99999999	99999999	99999999	99999999	99999999	99999999	99999999	99999999	99999999	99999999	99999999	99999999
RACE NOT AVAILABLE 6/	99999999	99999999	99999999	99999999	99999999	99999999	99999999	99999999	99999999	99999999	99999999	99999999
ETHNICITY 7/												
HISPANIC OR LATINO	99999999	99999999	99999999	99999999	99999999	99999999	99999999	99999999	99999999	99999999	99999999	99999999
NOT HISPANIC OR LATINO	99999999	99999999	99999999	99999999	99999999	99999999	99999999	99999999	99999999	99999999	99999999	99999999
JOINT (HISPANIC OR LATINO/ NOT HISPANIC OR LATINO)	99999999	99999999	99999999	99999999	99999999	99999999	99999999	99999999	99999999	99999999	99999999	99999999
ETHNICITY NOT AVAILABLE 6/	99999999	99999999	99999999	99999999	99999999	99999999	99999999	99999999	99999999	99999999	99999999	99999999
MINORITY STATUS 8/												
WHITE NON-HISPANIC	99999999	99999999	99999999	99999999	99999999	99999999	99999999	99999999	99999999	99999999	99999999	99999999
OTHERS, INCLUDING HISPANIC	99999999	99999999	99999999	99999999	99999999	99999999	99999999	99999999	99999999	99999999	99999999	99999999

TABLE 5-2: DISPOSITION OF APPLICATIONS FOR CONVENTIONAL HOME-PURCHASE LOANS, 1- TO 4-FAMILY AND MANUFACTURED HOME DWELLINGS, BY INCOME, RACE AND ETHNICITY OF APPLICANT, 2004

PAGE: 9999
RUN DATE: MM/DD/CCYY

INSTITUTION: XXXXXXXXXX-X XXXXXXXXXXXXXXXXXXXXXXXXXXXXX

MSA/MD: 99999 - XXXXXXXXXXXXXXXXXXXXXXXXXXXXXXXXXXXXXXXX

INCOME, RACE AND ETHNICITY CONTINUED	APPLICATIONS RECEIVED 20/		LOANS ORIGINATED		APPS. APPROVED BUT NOT ACCEPTED		APPLICATIONS DENIED		APPLICATIONS WITHDRAWN		FILES CLOSED FOR INCOMPLETENESS	
	NUMBER	$000'S	NUMBER	$000'S	NUMBER	$000'S	NUMBER	$000'S	NUMBER	$000'S	NUMBER	$000'S
120% OR MORE OF MSA/MD MEDIAN												
RACE 5/												
AMERICAN INDIAN/ALASKA NATIVE	99999999	99999999	99999999	99999999	99999999	99999999	99999999	99999999	99999999	99999999	99999999	99999999
ASIAN	99999999	99999999	99999999	99999999	99999999	99999999	99999999	99999999	99999999	99999999	99999999	99999999
BLACK OR AFRICAN AMERICAN	99999999	99999999	99999999	99999999	99999999	99999999	99999999	99999999	99999999	99999999	99999999	99999999
NATIVE HAWAIIAN/OTHER PACIFIC ISL	99999999	99999999	99999999	99999999	99999999	99999999	99999999	99999999	99999999	99999999	99999999	99999999
WHITE	99999999	99999999	99999999	99999999	99999999	99999999	99999999	99999999	99999999	99999999	99999999	99999999
2 OR MORE MINORITY RACES	99999999	99999999	99999999	99999999	99999999	99999999	99999999	99999999	99999999	99999999	99999999	99999999
JOINT (WHITE/MINORITY RACE)	99999999	99999999	99999999	99999999	99999999	99999999	99999999	99999999	99999999	99999999	99999999	99999999
RACE NOT AVAILABLE 6/	99999999	99999999	99999999	99999999	99999999	99999999	99999999	99999999	99999999	99999999	99999999	99999999
ETHNICITY 7/												
HISPANIC OR LATINO	99999999	99999999	99999999	99999999	99999999	99999999	99999999	99999999	99999999	99999999	99999999	99999999
NOT HISPANIC OR LATINO	99999999	99999999	99999999	99999999	99999999	99999999	99999999	99999999	99999999	99999999	99999999	99999999
JOINT (HISPANIC OR LATINO/ NOT HISPANIC OR LATINO)	99999999	99999999	99999999	99999999	99999999	99999999	99999999	99999999	99999999	99999999	99999999	99999999
ETHNICITY NOT AVAILABLE 6/	99999999	99999999	99999999	99999999	99999999	99999999	99999999	99999999	99999999	99999999	99999999	99999999
MINORITY STATUS 8/												
WHITE NON-HISPANIC	99999999	99999999	99999999	99999999	99999999	99999999	99999999	99999999	99999999	99999999	99999999	99999999
OTHERS, INCLUDING HISPANIC	99999999	99999999	99999999	99999999	99999999	99999999	99999999	99999999	99999999	99999999	99999999	99999999
TOTAL 14/	99999999	99999999	99999999	99999999	99999999	99999999	99999999	99999999	99999999	99999999	99999999	99999999

TABLE 5-3: DISPOSITION OF APPLICATIONS TO REFINANCE LOANS ON
1- TO 4-FAMILY AND MANUFACTURED HOME DWELLINGS, BY INCOME, RACE AND ETHNICITY OF APPLICANT, 2004

PAGE: 9999
RUN DATE: MM/DD/CCYY

INSTITUTION: XXXXXXXXXX-X XXXXXXXXXXXXXXXXXXXXXXXXXXXXX

MSA/MD: 99999 - XXXXXXXXXXXXXXXXXXXXXXXXXXXXXXXXXXXXXXXX

INCOME, RACE AND ETHNICITY	APPLICATIONS RECEIVED 20/		LOANS ORIGINATED		APPS. APPROVED BUT NOT ACCEPTED		APPLICATIONS DENIED		APPLICATIONS WITHDRAWN		FILES CLOSED FOR INCOMPLETENESS	
	NUMBER	$000'S	NUMBER	$000'S	NUMBER	$000'S	NUMBER	$000'S	NUMBER	$000'S	NUMBER	$000'S
LESS THAN 50% OF MSA/MD MEDIAN												
RACE 5/												
AMERICAN INDIAN/ALASKA NATIVE	99999999	99999999	99999999	99999999	99999999	99999999	99999999	99999999	99999999	99999999	99999999	99999999
ASIAN	99999999	99999999	99999999	99999999	99999999	99999999	99999999	99999999	99999999	99999999	99999999	99999999
BLACK OR AFRICAN AMERICAN	99999999	99999999	99999999	99999999	99999999	99999999	99999999	99999999	99999999	99999999	99999999	99999999
NATIVE HAWAIIAN/OTHER PACIFIC ISL	99999999	99999999	99999999	99999999	99999999	99999999	99999999	99999999	99999999	99999999	99999999	99999999
WHITE	99999999	99999999	99999999	99999999	99999999	99999999	99999999	99999999	99999999	99999999	99999999	99999999
2 OR MORE MINORITY RACES	99999999	99999999	99999999	99999999	99999999	99999999	99999999	99999999	99999999	99999999	99999999	99999999
JOINT (WHITE/MINORITY RACE)	99999999	99999999	99999999	99999999	99999999	99999999	99999999	99999999	99999999	99999999	99999999	99999999
RACE NOT AVAILABLE 6/	99999999	99999999	99999999	99999999	99999999	99999999	99999999	99999999	99999999	99999999	99999999	99999999
ETHNICITY 7/												
HISPANIC OR LATINO	99999999	99999999	99999999	99999999	99999999	99999999	99999999	99999999	99999999	99999999	99999999	99999999
NOT HISPANIC OR LATINO	99999999	99999999	99999999	99999999	99999999	99999999	99999999	99999999	99999999	99999999	99999999	99999999
JOINT (HISPANIC OR LATINO/ NOT HISPANIC OR LATINO)	99999999	99999999	99999999	99999999	99999999	99999999	99999999	99999999	99999999	99999999	99999999	99999999
ETHNICITY NOT AVAILABLE 6/	99999999	99999999	99999999	99999999	99999999	99999999	99999999	99999999	99999999	99999999	99999999	99999999
MINORITY STATUS 8/												
WHITE NON-HISPANIC	99999999	99999999	99999999	99999999	99999999	99999999	99999999	99999999	99999999	99999999	99999999	99999999
OTHERS, INCLUDING HISPANIC	99999999	99999999	99999999	99999999	99999999	99999999	99999999	99999999	99999999	99999999	99999999	99999999
50-79% OF MSA/MD MEDIAN												
RACE 5/												
AMERICAN INDIAN/ALASKA NATIVE	99999999	99999999	99999999	99999999	99999999	99999999	99999999	99999999	99999999	99999999	99999999	99999999
ASIAN	99999999	99999999	99999999	99999999	99999999	99999999	99999999	99999999	99999999	99999999	99999999	99999999
BLACK OR AFRICAN AMERICAN	99999999	99999999	99999999	99999999	99999999	99999999	99999999	99999999	99999999	99999999	99999999	99999999
NATIVE HAWAIIAN/OTHER PACIFIC ISL	99999999	99999999	99999999	99999999	99999999	99999999	99999999	99999999	99999999	99999999	99999999	99999999
WHITE	99999999	99999999	99999999	99999999	99999999	99999999	99999999	99999999	99999999	99999999	99999999	99999999
2 OR MORE MINORITY RACES	99999999	99999999	99999999	99999999	99999999	99999999	99999999	99999999	99999999	99999999	99999999	99999999
JOINT (WHITE/MINORITY RACE)	99999999	99999999	99999999	99999999	99999999	99999999	99999999	99999999	99999999	99999999	99999999	99999999
RACE NOT AVAILABLE 6/	99999999	99999999	99999999	99999999	99999999	99999999	99999999	99999999	99999999	99999999	99999999	99999999
ETHNICITY 7/												
HISPANIC OR LATINO	99999999	99999999	99999999	99999999	99999999	99999999	99999999	99999999	99999999	99999999	99999999	99999999
NOT HISPANIC OR LATINO	99999999	99999999	99999999	99999999	99999999	99999999	99999999	99999999	99999999	99999999	99999999	99999999
JOINT (HISPANIC OR LATINO/ NOT HISPANIC OR LATINO)	99999999	99999999	99999999	99999999	99999999	99999999	99999999	99999999	99999999	99999999	99999999	99999999
ETHNICITY NOT AVAILABLE 6/	99999999	99999999	99999999	99999999	99999999	99999999	99999999	99999999	99999999	99999999	99999999	99999999
MINORITY STATUS 8/												
WHITE NON-HISPANIC	99999999	99999999	99999999	99999999	99999999	99999999	99999999	99999999	99999999	99999999	99999999	99999999
OTHERS, INCLUDING HISPANIC	99999999	99999999	99999999	99999999	99999999	99999999	99999999	99999999	99999999	99999999	99999999	99999999

TABLE 5-3: DISPOSITION OF APPLICATIONS TO REFINANCE LOANS ON
1- TO 4-FAMILY AND MANUFACTURED HOME DWELLINGS, BY INCOME, RACE AND ETHNICITY OF APPLICANT, 2004

PAGE: 9999
RUN DATE: MM/DD/CCYY

INSTITUTION: XXXXXXXXXX-X XXXXXXXXXXXXXXXXXXXXXXXXXXXX

MSA/MD: 99999 - XXXXXXXXXXXXXXXXXXXXXXXXXXXXXXXXXXXXXXXX

INCOME, RACE AND ETHNICITY CONTINUED	APPLICATIONS RECEIVED 20/		LOANS ORIGINATED		APPS. APPROVED BUT NOT ACCEPTED		APPLICATIONS DENIED		APPLICATIONS WITHDRAWN		FILES CLOSED FOR INCOMPLETENESS	
	NUMBER	$000'S	NUMBER	$000'S	NUMBER	$000'S	NUMBER	$000'S	NUMBER	$000'S	NUMBER	$000'S
80-99% OF MSA/MD MEDIAN												
RACE 5/												
AMERICAN INDIAN/ALASKA NATIVE	99999999	99999999	99999999	99999999	99999999	99999999	99999999	99999999	99999999	99999999	99999999	99999999
ASIAN	99999999	99999999	99999999	99999999	99999999	99999999	99999999	99999999	99999999	99999999	99999999	99999999
BLACK OR AFRICAN AMERICAN	99999999	99999999	99999999	99999999	99999999	99999999	99999999	99999999	99999999	99999999	99999999	99999999
NATIVE HAWAIIAN/OTHER PACIFIC ISL	99999999	99999999	99999999	99999999	99999999	99999999	99999999	99999999	99999999	99999999	99999999	99999999
WHITE	99999999	99999999	99999999	99999999	99999999	99999999	99999999	99999999	99999999	99999999	99999999	99999999
2 OR MORE MINORITY RACES	99999999	99999999	99999999	99999999	99999999	99999999	99999999	99999999	99999999	99999999	99999999	99999999
JOINT (WHITE/MINORITY RACE)	99999999	99999999	99999999	99999999	99999999	99999999	99999999	99999999	99999999	99999999	99999999	99999999
RACE NOT AVAILABLE 6/	99999999	99999999	99999999	99999999	99999999	99999999	99999999	99999999	99999999	99999999	99999999	99999999
ETHNICITY 7/												
HISPANIC OR LATINO	99999999	99999999	99999999	99999999	99999999	99999999	99999999	99999999	99999999	99999999	99999999	99999999
NOT HISPANIC OR LATINO	99999999	99999999	99999999	99999999	99999999	99999999	99999999	99999999	99999999	99999999	99999999	99999999
JOINT (HISPANIC OR LATINO/ NOT HISPANIC OR LATINO)	99999999	99999999	99999999	99999999	99999999	99999999	99999999	99999999	99999999	99999999	99999999	99999999
ETHNICITY NOT AVAILABLE 6/	99999999	99999999	99999999	99999999	99999999	99999999	99999999	99999999	99999999	99999999	99999999	99999999
MINORITY STATUS 8/												
WHITE NON-HISPANIC	99999999	99999999	99999999	99999999	99999999	99999999	99999999	99999999	99999999	99999999	99999999	99999999
OTHERS, INCLUDING HISPANIC	99999999	99999999	99999999	99999999	99999999	99999999	99999999	99999999	99999999	99999999	99999999	99999999
100-119% OF MSA/MD MEDIAN												
RACE 5/												
AMERICAN INDIAN/ALASKA NATIVE	99999999	99999999	99999999	99999999	99999999	99999999	99999999	99999999	99999999	99999999	99999999	99999999
ASIAN	99999999	99999999	99999999	99999999	99999999	99999999	99999999	99999999	99999999	99999999	99999999	99999999
BLACK OR AFRICAN AMERICAN	99999999	99999999	99999999	99999999	99999999	99999999	99999999	99999999	99999999	99999999	99999999	99999999
NATIVE HAWAIIAN/OTHER PACIFIC ISL	99999999	99999999	99999999	99999999	99999999	99999999	99999999	99999999	99999999	99999999	99999999	99999999
WHITE	99999999	99999999	99999999	99999999	99999999	99999999	99999999	99999999	99999999	99999999	99999999	99999999
2 OR MORE MINORITY RACES	99999999	99999999	99999999	99999999	99999999	99999999	99999999	99999999	99999999	99999999	99999999	99999999
JOINT (WHITE/MINORITY RACE)	99999999	99999999	99999999	99999999	99999999	99999999	99999999	99999999	99999999	99999999	99999999	99999999
RACE NOT AVAILABLE 6/	99999999	99999999	99999999	99999999	99999999	99999999	99999999	99999999	99999999	99999999	99999999	99999999
ETHNICITY 7/												
HISPANIC OR LATINO	99999999	99999999	99999999	99999999	99999999	99999999	99999999	99999999	99999999	99999999	99999999	99999999
NOT HISPANIC OR LATINO	99999999	99999999	99999999	99999999	99999999	99999999	99999999	99999999	99999999	99999999	99999999	99999999
JOINT (HISPANIC OR LATINO/ NOT HISPANIC OR LATINO)	99999999	99999999	99999999	99999999	99999999	99999999	99999999	99999999	99999999	99999999	99999999	99999999
ETHNICITY NOT AVAILABLE 6/	99999999	99999999	99999999	99999999	99999999	99999999	99999999	99999999	99999999	99999999	99999999	99999999
MINORITY STATUS 8/												
WHITE NON-HISPANIC	99999999	99999999	99999999	99999999	99999999	99999999	99999999	99999999	99999999	99999999	99999999	99999999
OTHERS, INCLUDING HISPANIC	99999999	99999999	99999999	99999999	99999999	99999999	99999999	99999999	99999999	99999999	99999999	99999999

TABLE 5-3: DISPOSITION OF APPLICATIONS TO REFINANCE LOANS ON
1- TO 4-FAMILY AND MANUFACTURED HOME DWELLINGS, BY INCOME, RACE AND ETHNICITY OF APPLICANT, 2004

PAGE: 9999
RUN DATE: MM/DD/CCYY

INSTITUTION: XXXXXXXXXX-X XXXXXXXXXXXXXXXXXXXXXXXXXXXX

MSA/MD: 99999 - XXXXXXXXXXXXXXXXXXXXXXXXXXXXXXXXXXXXXXXX

INCOME, RACE AND ETHNICITY CONTINUED	APPLICATIONS RECEIVED 20/		LOANS ORIGINATED		APPS. APPROVED BUT NOT ACCEPTED		APPLICATIONS DENIED		APPLICATIONS WITHDRAWN		FILES CLOSED FOR INCOMPLETENESS	
	NUMBER	$000'S	NUMBER	$000'S	NUMBER	$000'S	NUMBER	$000'S	NUMBER	$000'S	NUMBER	$000'S
120% OR MORE OF MSA/MD MEDIAN												
RACE 5/												
AMERICAN INDIAN/ALASKA NATIVE	99999999	99999999	99999999	99999999	99999999	99999999	99999999	99999999	99999999	99999999	99999999	99999999
ASIAN	99999999	99999999	99999999	99999999	99999999	99999999	99999999	99999999	99999999	99999999	99999999	99999999
BLACK OR AFRICAN AMERICAN	99999999	99999999	99999999	99999999	99999999	99999999	99999999	99999999	99999999	99999999	99999999	99999999
NATIVE HAWAIIAN/OTHER PACIFIC ISL	99999999	99999999	99999999	99999999	99999999	99999999	99999999	99999999	99999999	99999999	99999999	99999999
WHITE	99999999	99999999	99999999	99999999	99999999	99999999	99999999	99999999	99999999	99999999	99999999	99999999
2 OR MORE MINORITY RACES	99999999	99999999	99999999	99999999	99999999	99999999	99999999	99999999	99999999	99999999	99999999	99999999
JOINT (WHITE/MINORITY RACE)	99999999	99999999	99999999	99999999	99999999	99999999	99999999	99999999	99999999	99999999	99999999	99999999
RACE NOT AVAILABLE 6/	99999999	99999999	99999999	99999999	99999999	99999999	99999999	99999999	99999999	99999999	99999999	99999999
ETHNICITY 7/												
HISPANIC OR LATINO	99999999	99999999	99999999	99999999	99999999	99999999	99999999	99999999	99999999	99999999	99999999	99999999
NOT HISPANIC OR LATINO	99999999	99999999	99999999	99999999	99999999	99999999	99999999	99999999	99999999	99999999	99999999	99999999
JOINT (HISPANIC OR LATINO/ NOT HISPANIC OR LATINO)	99999999	99999999	99999999	99999999	99999999	99999999	99999999	99999999	99999999	99999999	99999999	99999999
ETHNICITY NOT AVAILABLE 6/	99999999	99999999	99999999	99999999	99999999	99999999	99999999	99999999	99999999	99999999	99999999	99999999
MINORITY STATUS 8/												
WHITE NON-HISPANIC	99999999	99999999	99999999	99999999	99999999	99999999	99999999	99999999	99999999	99999999	99999999	99999999
OTHERS, INCLUDING HISPANIC	99999999	99999999	99999999	99999999	99999999	99999999	99999999	99999999	99999999	99999999	99999999	99999999
TOTAL 14/	99999999	99999999	99999999	99999999	99999999	99999999	99999999	99999999	99999999	99999999	99999999	99999999

TABLE 5-4: DISPOSITION OF APPLICATIONS FOR HOME IMPROVEMENT LOANS,
1- TO 4-FAMILY AND MANUFACTURED HOME DWELLINGS, BY INCOME, RACE AND ETHNICITY OF APPLICANT, 2004

PAGE: 9999
RUN DATE: MM/DD/CCYY

INSTITUTION: XXXXXXXXXX-X XXXXXXXXXXXXXXXXXXXXXXXXXXXXXX

MSA/MD: 99999 - XXXXXXXXXXXXXXXXXXXXXXXXXXXXXXXXXXXXXXXX

INCOME, RACE AND ETHNICITY	APPLICATIONS RECEIVED 20/		LOANS ORIGINATED		APPS. APPROVED BUT NOT ACCEPTED		APPLICATIONS DENIED		APPLICATIONS WITHDRAWN		FILES CLOSED FOR INCOMPLETENESS	
	NUMBER	$000'S	NUMBER	$000'S	NUMBER	$000'S	NUMBER	$000'S	NUMBER	$000'S	NUMBER	$000'S
LESS THAN 50% OF MSA/MD MEDIAN												
RACE 5/												
AMERICAN INDIAN/ALASKA NATIVE	99999999	99999999	99999999	99999999	99999999	99999999	99999999	99999999	99999999	99999999	99999999	99999999
ASIAN	99999999	99999999	99999999	99999999	99999999	99999999	99999999	99999999	99999999	99999999	99999999	99999999
BLACK OR AFRICAN AMERICAN	99999999	99999999	99999999	99999999	99999999	99999999	99999999	99999999	99999999	99999999	99999999	99999999
NATIVE HAWAIIAN/OTHER PACIFIC ISL	99999999	99999999	99999999	99999999	99999999	99999999	99999999	99999999	99999999	99999999	99999999	99999999
WHITE	99999999	99999999	99999999	99999999	99999999	99999999	99999999	99999999	99999999	99999999	99999999	99999999
2 OR MORE MINORITY RACES	99999999	99999999	99999999	99999999	99999999	99999999	99999999	99999999	99999999	99999999	99999999	99999999
JOINT (WHITE/MINORITY RACE)	99999999	99999999	99999999	99999999	99999999	99999999	99999999	99999999	99999999	99999999	99999999	99999999
RACE NOT AVAILABLE 6/	99999999	99999999	99999999	99999999	99999999	99999999	99999999	99999999	99999999	99999999	99999999	99999999
ETHNICITY 7/												
HISPANIC OR LATINO	99999999	99999999	99999999	99999999	99999999	99999999	99999999	99999999	99999999	99999999	99999999	99999999
NOT HISPANIC OR LATINO	99999999	99999999	99999999	99999999	99999999	99999999	99999999	99999999	99999999	99999999	99999999	99999999
JOINT (HISPANIC OR LATINO/ NOT HISPANIC OR LATINO)	99999999	99999999	99999999	99999999	99999999	99999999	99999999	99999999	99999999	99999999	99999999	99999999
ETHNICITY NOT AVAILABLE 6/	99999999	99999999	99999999	99999999	99999999	99999999	99999999	99999999	99999999	99999999	99999999	99999999
MINORITY STATUS 8/												
WHITE NON-HISPANIC	99999999	99999999	99999999	99999999	99999999	99999999	99999999	99999999	99999999	99999999	99999999	99999999
OTHERS, INCLUDING HISPANIC	99999999	99999999	99999999	99999999	99999999	99999999	99999999	99999999	99999999	99999999	99999999	99999999
50-79% OF MSA/MD MEDIAN												
RACE 5/												
AMERICAN INDIAN/ALASKA NATIVE	99999999	99999999	99999999	99999999	99999999	99999999	99999999	99999999	99999999	99999999	99999999	99999999
ASIAN	99999999	99999999	99999999	99999999	99999999	99999999	99999999	99999999	99999999	99999999	99999999	99999999
BLACK OR AFRICAN AMERICAN	99999999	99999999	99999999	99999999	99999999	99999999	99999999	99999999	99999999	99999999	99999999	99999999
NATIVE HAWAIIAN/OTHER PACIFIC ISL	99999999	99999999	99999999	99999999	99999999	99999999	99999999	99999999	99999999	99999999	99999999	99999999
WHITE	99999999	99999999	99999999	99999999	99999999	99999999	99999999	99999999	99999999	99999999	99999999	99999999
2 OR MORE MINORITY RACES	99999999	99999999	99999999	99999999	99999999	99999999	99999999	99999999	99999999	99999999	99999999	99999999
JOINT (WHITE/MINORITY RACE)	99999999	99999999	99999999	99999999	99999999	99999999	99999999	99999999	99999999	99999999	99999999	99999999
RACE NOT AVAILABLE 6/	99999999	99999999	99999999	99999999	99999999	99999999	99999999	99999999	99999999	99999999	99999999	99999999
ETHNICITY 7/												
HISPANIC OR LATINO	99999999	99999999	99999999	99999999	99999999	99999999	99999999	99999999	99999999	99999999	99999999	99999999
NOT HISPANIC OR LATINO	99999999	99999999	99999999	99999999	99999999	99999999	99999999	99999999	99999999	99999999	99999999	99999999
JOINT (HISPANIC OR LATINO/ NOT HISPANIC OR LATINO)	99999999	99999999	99999999	99999999	99999999	99999999	99999999	99999999	99999999	99999999	99999999	99999999
ETHNICITY NOT AVAILABLE 6/	99999999	99999999	99999999	99999999	99999999	99999999	99999999	99999999	99999999	99999999	99999999	99999999
MINORITY STATUS 8/												
WHITE NON-HISPANIC	99999999	99999999	99999999	99999999	99999999	99999999	99999999	99999999	99999999	99999999	99999999	99999999
OTHERS, INCLUDING HISPANIC	99999999	99999999	99999999	99999999	99999999	99999999	99999999	99999999	99999999	99999999	99999999	99999999

TABLE 5-4: DISPOSITION OF APPLICATIONS FOR HOME IMPROVEMENT LOANS,
1- TO 4-FAMILY AND MANUFACTURED HOME DWELLINGS, BY INCOME, RACE, AND ETHNICITY OF APPLICANT, 2004

PAGE: 9999
RUN DATE: MM/DD/CCYY

INSTITUTION: XXXXXXXXXX-X XXXXXXXXXXXXXXXXXXXXXXXXXXXXX

MSA/MD: 99999 - XXXXXXXXXXXXXXXXXXXXXXXXXXXXXXXXXXXXXXXX

INCOME, RACE AND ETHNICITY CONTINUED	APPLICATIONS RECEIVED 20/		LOANS ORIGINATED		APPS. APPROVED BUT NOT ACCEPTED		APPLICATIONS DENIED		APPLICATIONS WITHDRAWN		FILES CLOSED FOR INCOMPLETENESS	
	NUMBER	$000'S	NUMBER	$000'S	NUMBER	$000'S	NUMBER	$000'S	NUMBER	$000'S	NUMBER	$000'S
80-99% OF MSA/MD MEDIAN												
RACE 5/												
AMERICAN INDIAN/ALASKA NATIVE	99999999	99999999	99999999	99999999	99999999	99999999	99999999	99999999	99999999	99999999	99999999	99999999
ASIAN	99999999	99999999	99999999	99999999	99999999	99999999	99999999	99999999	99999999	99999999	99999999	99999999
BLACK OR AFRICAN AMERICAN	99999999	99999999	99999999	99999999	99999999	99999999	99999999	99999999	99999999	99999999	99999999	99999999
NATIVE HAWAIIAN/OTHER PACIFIC ISL	99999999	99999999	99999999	99999999	99999999	99999999	99999999	99999999	99999999	99999999	99999999	99999999
WHITE	99999999	99999999	99999999	99999999	99999999	99999999	99999999	99999999	99999999	99999999	99999999	99999999
2 OR MORE MINORITY RACES	99999999	99999999	99999999	99999999	99999999	99999999	99999999	99999999	99999999	99999999	99999999	99999999
JOINT (WHITE/MINORITY RACE)	99999999	99999999	99999999	99999999	99999999	99999999	99999999	99999999	99999999	99999999	99999999	99999999
RACE NOT AVAILABLE 6/	99999999	99999999	99999999	99999999	99999999	99999999	99999999	99999999	99999999	99999999	99999999	99999999
ETHNICITY 7/												
HISPANIC OR LATINO	99999999	99999999	99999999	99999999	99999999	99999999	99999999	99999999	99999999	99999999	99999999	99999999
NOT HISPANIC OR LATINO	99999999	99999999	99999999	99999999	99999999	99999999	99999999	99999999	99999999	99999999	99999999	99999999
JOINT (HISPANIC OR LATINO/ NOT HISPANIC OR LATINO)	99999999	99999999	99999999	99999999	99999999	99999999	99999999	99999999	99999999	99999999	99999999	99999999
ETHNICITY NOT AVAILABLE 6/	99999999	99999999	99999999	99999999	99999999	99999999	99999999	99999999	99999999	99999999	99999999	99999999
MINORITY STATUS 8/												
WHITE NON-HISPANIC	99999999	99999999	99999999	99999999	99999999	99999999	99999999	99999999	99999999	99999999	99999999	99999999
OTHERS, INCLUDING HISPANIC	99999999	99999999	99999999	99999999	99999999	99999999	99999999	99999999	99999999	99999999	99999999	99999999
100-119% OF MSA/MD MEDIAN												
RACE 5/												
AMERICAN INDIAN/ALASKA NATIVE	99999999	99999999	99999999	99999999	99999999	99999999	99999999	99999999	99999999	99999999	99999999	99999999
ASIAN	99999999	99999999	99999999	99999999	99999999	99999999	99999999	99999999	99999999	99999999	99999999	99999999
BLACK OR AFRICAN AMERICAN	99999999	99999999	99999999	99999999	99999999	99999999	99999999	99999999	99999999	99999999	99999999	99999999
NATIVE HAWAIIAN/OTHER PACIFIC ISL	99999999	99999999	99999999	99999999	99999999	99999999	99999999	99999999	99999999	99999999	99999999	99999999
WHITE	99999999	99999999	99999999	99999999	99999999	99999999	99999999	99999999	99999999	99999999	99999999	99999999
2 OR MORE MINORITY RACES	99999999	99999999	99999999	99999999	99999999	99999999	99999999	99999999	99999999	99999999	99999999	99999999
JOINT (WHITE/MINORITY RACE)	99999999	99999999	99999999	99999999	99999999	99999999	99999999	99999999	99999999	99999999	99999999	99999999
RACE NOT AVAILABLE 6/	99999999	99999999	99999999	99999999	99999999	99999999	99999999	99999999	99999999	99999999	99999999	99999999
ETHNICITY 7/												
HISPANIC OR LATINO	99999999	99999999	99999999	99999999	99999999	99999999	99999999	99999999	99999999	99999999	99999999	99999999
NOT HISPANIC OR LATINO	99999999	99999999	99999999	99999999	99999999	99999999	99999999	99999999	99999999	99999999	99999999	99999999
JOINT (HISPANIC OR LATINO/ NOT HISPANIC OR LATINO)	99999999	99999999	99999999	99999999	99999999	99999999	99999999	99999999	99999999	99999999	99999999	99999999
ETHNICITY NOT AVAILABLE 6/	99999999	99999999	99999999	99999999	99999999	99999999	99999999	99999999	99999999	99999999	99999999	99999999
MINORITY STATUS 8/												
WHITE NON-HISPANIC	99999999	99999999	99999999	99999999	99999999	99999999	99999999	99999999	99999999	99999999	99999999	99999999
OTHERS, INCLUDING HISPANIC	99999999	99999999	99999999	99999999	99999999	99999999	99999999	99999999	99999999	99999999	99999999	99999999

TABLE 5-4: DISPOSITION OF APPLICATIONS FOR HOME IMPROVEMENT LOANS,
1- TO 4-FAMILY AND MANUFACTURED HOME DWELLINGS, BY INCOME, RACE, AND ETHNICITY OF APPLICANT, 2004

PAGE: 9999
RUN DATE: MM/DD/CCYY

INSTITUTION: XXXXXXXXXX-X XXXXXXXXXXXXXXXXXXXXXXXXXXXXXX

MSA/MD: 99999 - XXXXXXXXXXXXXXXXXXXXXXXXXXXXXXXXXXXXXXXXXX

INCOME, RACE AND ETHNICITY CONTINUED	APPLICATIONS RECEIVED 20/		LOANS ORIGINATED		APPS. APPROVED BUT NOT ACCEPTED		APPLICATIONS DENIED		APPLICATIONS WITHDRAWN		FILES CLOSED FOR INCOMPLETENESS	
	NUMBER	$000'S	NUMBER	$000'S	NUMBER	$000'S	NUMBER	$000'S	NUMBER	$000'S	NUMBER	$000'S
120% OR MORE OF MSA/MD MEDIAN												
RACE 5/												
AMERICAN INDIAN/ALASKA NATIVE	99999999	99999999	99999999	99999999	99999999	99999999	99999999	99999999	99999999	99999999	99999999	99999999
ASIAN	99999999	99999999	99999999	99999999	99999999	99999999	99999999	99999999	99999999	99999999	99999999	99999999
BLACK OR AFRICAN AMERICAN	99999999	99999999	99999999	99999999	99999999	99999999	99999999	99999999	99999999	99999999	99999999	99999999
NATIVE HAWAIIAN/OTHER PACIFIC ISL	99999999	99999999	99999999	99999999	99999999	99999999	99999999	99999999	99999999	99999999	99999999	99999999
WHITE	99999999	99999999	99999999	99999999	99999999	99999999	99999999	99999999	99999999	99999999	99999999	99999999
2 OR MORE MINORITY RACES	99999999	99999999	99999999	99999999	99999999	99999999	99999999	99999999	99999999	99999999	99999999	99999999
JOINT (WHITE/MINORITY RACE)	99999999	99999999	99999999	99999999	99999999	99999999	99999999	99999999	99999999	99999999	99999999	99999999
RACE NOT AVAILABLE 6/	99999999	99999999	99999999	99999999	99999999	99999999	99999999	99999999	99999999	99999999	99999999	99999999
ETHNICITY 7/												
HISPANIC OR LATINO	99999999	99999999	99999999	99999999	99999999	99999999	99999999	99999999	99999999	99999999	99999999	99999999
NOT HISPANIC OR LATINO	99999999	99999999	99999999	99999999	99999999	99999999	99999999	99999999	99999999	99999999	99999999	99999999
JOINT (HISPANIC OR LATINO/ NOT HISPANIC OR LATINO)	99999999	99999999	99999999	99999999	99999999	99999999	99999999	99999999	99999999	99999999	99999999	99999999
ETHNICITY NOT AVAILABLE 6/	99999999	99999999	99999999	99999999	99999999	99999999	99999999	99999999	99999999	99999999	99999999	99999999
MINORITY STATUS 8/												
WHITE NON-HISPANIC	99999999	99999999	99999999	99999999	99999999	99999999	99999999	99999999	99999999	99999999	99999999	99999999
OTHERS, INCLUDING HISPANIC	99999999	99999999	99999999	99999999	99999999	99999999	99999999	99999999	99999999	99999999	99999999	99999999
TOTAL 14/	99999999	99999999	99999999	99999999	99999999	99999999	99999999	99999999	99999999	99999999	99999999	99999999

TABLE 5-5: DISPOSITION OF APPLICATIONS FOR LOANS ON DWELLINGS FOR 5 OR MORE FAMILIES, BY INCOME, RACE AND ETHNICITY OF APPLICANT, 2004

PAGE: 9999
RUN DATE: MM/DD/CCYY

INSTITUTION: XXXXXXXXXX-X XXXXXXXXXXXXXXXXXXXXXXXXXXXX

MSA/MD: 99999 - XXXXXXXXXXXXXXXXXXXXXXXXXXXXXXXXXXXXXXXX

INCOME, RACE AND ETHNICITY	APPLICATIONS RECEIVED 20/		LOANS ORIGINATED		APPS. APPROVED BUT NOT ACCEPTED		APPLICATIONS DENIED		APPLICATIONS WITHDRAWN		FILES CLOSED FOR INCOMPLETENESS	
	NUMBER	$000'S	NUMBER	$000'S	NUMBER	$000'S	NUMBER	$000'S	NUMBER	$000'S	NUMBER	$000'S
LESS THAN 50% OF MSA/MD MEDIAN												
RACE 5/												
AMERICAN INDIAN/ALASKA NATIVE	99999999	99999999	99999999	99999999	99999999	99999999	99999999	99999999	99999999	99999999	99999999	99999999
ASIAN	99999999	99999999	99999999	99999999	99999999	99999999	99999999	99999999	99999999	99999999	99999999	99999999
BLACK OR AFRICAN AMERICAN	99999999	99999999	99999999	99999999	99999999	99999999	99999999	99999999	99999999	99999999	99999999	99999999
NATIVE HAWAIIAN/OTHER PACIFIC ISL	99999999	99999999	99999999	99999999	99999999	99999999	99999999	99999999	99999999	99999999	99999999	99999999
WHITE	99999999	99999999	99999999	99999999	99999999	99999999	99999999	99999999	99999999	99999999	99999999	99999999
2 OR MORE MINORITY RACES	99999999	99999999	99999999	99999999	99999999	99999999	99999999	99999999	99999999	99999999	99999999	99999999
JOINT (WHITE/MINORITY RACE)	99999999	99999999	99999999	99999999	99999999	99999999	99999999	99999999	99999999	99999999	99999999	99999999
RACE NOT AVAILABLE 6/	99999999	99999999	99999999	99999999	99999999	99999999	99999999	99999999	99999999	99999999	99999999	99999999
ETHNICITY 7/												
HISPANIC OR LATINO	99999999	99999999	99999999	99999999	99999999	99999999	99999999	99999999	99999999	99999999	99999999	99999999
NOT HISPANIC OR LATINO	99999999	99999999	99999999	99999999	99999999	99999999	99999999	99999999	99999999	99999999	99999999	99999999
JOINT (HISPANIC OR LATINO/ NOT HISPANIC OR LATINO)	99999999	99999999	99999999	99999999	99999999	99999999	99999999	99999999	99999999	99999999	99999999	99999999
ETHNICITY NOT AVAILABLE 6/	99999999	99999999	99999999	99999999	99999999	99999999	99999999	99999999	99999999	99999999	99999999	99999999
MINORITY STATUS 8/												
WHITE NON-HISPANIC	99999999	99999999	99999999	99999999	99999999	99999999	99999999	99999999	99999999	99999999	99999999	99999999
OTHERS, INCLUDING HISPANIC	99999999	99999999	99999999	99999999	99999999	99999999	99999999	99999999	99999999	99999999	99999999	99999999
50-79% OF MSA/MD MEDIAN												
RACE 5/												
AMERICAN INDIAN/ALASKA NATIVE	99999999	99999999	99999999	99999999	99999999	99999999	99999999	99999999	99999999	99999999	99999999	99999999
ASIAN	99999999	99999999	99999999	99999999	99999999	99999999	99999999	99999999	99999999	99999999	99999999	99999999
BLACK OR AFRICAN AMERICAN	99999999	99999999	99999999	99999999	99999999	99999999	99999999	99999999	99999999	99999999	99999999	99999999
NATIVE HAWAIIAN/OTHER PACIFIC ISL	99999999	99999999	99999999	99999999	99999999	99999999	99999999	99999999	99999999	99999999	99999999	99999999
WHITE	99999999	99999999	99999999	99999999	99999999	99999999	99999999	99999999	99999999	99999999	99999999	99999999
2 OR MORE MINORITY RACES	99999999	99999999	99999999	99999999	99999999	99999999	99999999	99999999	99999999	99999999	99999999	99999999
JOINT (WHITE/MINORITY RACE)	99999999	99999999	99999999	99999999	99999999	99999999	99999999	99999999	99999999	99999999	99999999	99999999
RACE NOT AVAILABLE 6/	99999999	99999999	99999999	99999999	99999999	99999999	99999999	99999999	99999999	99999999	99999999	99999999
ETHNICITY 7/												
HISPANIC OR LATINO	99999999	99999999	99999999	99999999	99999999	99999999	99999999	99999999	99999999	99999999	99999999	99999999
NOT HISPANIC OR LATINO	99999999	99999999	99999999	99999999	99999999	99999999	99999999	99999999	99999999	99999999	99999999	99999999
JOINT (HISPANIC OR LATINO/ NOT HISPANIC OR LATINO)	99999999	99999999	99999999	99999999	99999999	99999999	99999999	99999999	99999999	99999999	99999999	99999999
ETHNICITY NOT AVAILABLE 6/	99999999	99999999	99999999	99999999	99999999	99999999	99999999	99999999	99999999	99999999	99999999	99999999
MINORITY STATUS 8/												
WHITE NON-HISPANIC	99999999	99999999	99999999	99999999	99999999	99999999	99999999	99999999	99999999	99999999	99999999	99999999
OTHERS, INCLUDING HISPANIC	99999999	99999999	99999999	99999999	99999999	99999999	99999999	99999999	99999999	99999999	99999999	99999999

TABLE 5-5: DISPOSITION OF APPLICATIONS FOR LOANS ON DWELLINGS FOR 5 OR MORE FAMILIES, BY INCOME, RACE AND ETHNICITY OF APPLICANT, 2004

PAGE: 9999
RUN DATE: MM/DD/CCYY

INSTITUTION: XXXXXXXXXX-X XXXXXXXXXXXXXXXXXXXXXXXXXXXXX

MSA/MD: 99999 - XXXXXXXXXXXXXXXXXXXXXXXXXXXXXXXXXXXXXXXX

INCOME, RACE AND ETHNICITY CONTINUED	APPLICATIONS RECEIVED 20/		LOANS ORIGINATED		APPS. APPROVED BUT NOT ACCEPTED		APPLICATIONS DENIED		APPLICATIONS WITHDRAWN		FILES CLOSED FOR INCOMPLETENESS	
	NUMBER	$000'S	NUMBER	$000'S	NUMBER	$000'S	NUMBER	$000'S	NUMBER	$000'S	NUMBER	$000'S
80-99% OF MSA/MD MEDIAN												
RACE 5/												
AMERICAN INDIAN/ALASKA NATIVE	99999999	99999999	99999999	99999999	99999999	99999999	99999999	99999999	99999999	99999999	99999999	99999999
ASIAN	99999999	99999999	99999999	99999999	99999999	99999999	99999999	99999999	99999999	99999999	99999999	99999999
BLACK OR AFRICAN AMERICAN	99999999	99999999	99999999	99999999	99999999	99999999	99999999	99999999	99999999	99999999	99999999	99999999
NATIVE HAWAIIAN/OTHER PACIFIC ISL	99999999	99999999	99999999	99999999	99999999	99999999	99999999	99999999	99999999	99999999	99999999	99999999
WHITE	99999999	99999999	99999999	99999999	99999999	99999999	99999999	99999999	99999999	99999999	99999999	99999999
2 OR MORE MINORITY RACES	99999999	99999999	99999999	99999999	99999999	99999999	99999999	99999999	99999999	99999999	99999999	99999999
JOINT (WHITE/MINORITY RACE)	99999999	99999999	99999999	99999999	99999999	99999999	99999999	99999999	99999999	99999999	99999999	99999999
RACE NOT AVAILABLE 6/	99999999	99999999	99999999	99999999	99999999	99999999	99999999	99999999	99999999	99999999	99999999	99999999
ETHNICITY 7/												
HISPANIC OR LATINO	99999999	99999999	99999999	99999999	99999999	99999999	99999999	99999999	99999999	99999999	99999999	99999999
NOT HISPANIC OR LATINO	99999999	99999999	99999999	99999999	99999999	99999999	99999999	99999999	99999999	99999999	99999999	99999999
JOINT (HISPANIC OR LATINO/ NOT HISPANIC OR LATINO)	99999999	99999999	99999999	99999999	99999999	99999999	99999999	99999999	99999999	99999999	99999999	99999999
ETHNICITY NOT AVAILABLE 6/	99999999	99999999	99999999	99999999	99999999	99999999	99999999	99999999	99999999	99999999	99999999	99999999
MINORITY STATUS 8/												
WHITE NON-HISPANIC	99999999	99999999	99999999	99999999	99999999	99999999	99999999	99999999	99999999	99999999	99999999	99999999
OTHERS, INCLUDING HISPANIC	99999999	99999999	99999999	99999999	99999999	99999999	99999999	99999999	99999999	99999999	99999999	99999999
100-119% OF MSA/MD MEDIAN												
RACE 5/												
AMERICAN INDIAN/ALASKA NATIVE	99999999	99999999	99999999	99999999	99999999	99999999	99999999	99999999	99999999	99999999	99999999	99999999
ASIAN	99999999	99999999	99999999	99999999	99999999	99999999	99999999	99999999	99999999	99999999	99999999	99999999
BLACK OR AFRICAN AMERICAN	99999999	99999999	99999999	99999999	99999999	99999999	99999999	99999999	99999999	99999999	99999999	99999999
NATIVE HAWAIIAN/OTHER PACIFIC ISL	99999999	99999999	99999999	99999999	99999999	99999999	99999999	99999999	99999999	99999999	99999999	99999999
WHITE	99999999	99999999	99999999	99999999	99999999	99999999	99999999	99999999	99999999	99999999	99999999	99999999
2 OR MORE MINORITY RACES	99999999	99999999	99999999	99999999	99999999	99999999	99999999	99999999	99999999	99999999	99999999	99999999
JOINT (WHITE/MINORITY RACE)	99999999	99999999	99999999	99999999	99999999	99999999	99999999	99999999	99999999	99999999	99999999	99999999
RACE NOT AVAILABLE 6/	99999999	99999999	99999999	99999999	99999999	99999999	99999999	99999999	99999999	99999999	99999999	99999999
ETHNICITY 7/												
HISPANIC OR LATINO	99999999	99999999	99999999	99999999	99999999	99999999	99999999	99999999	99999999	99999999	99999999	99999999
NOT HISPANIC OR LATINO	99999999	99999999	99999999	99999999	99999999	99999999	99999999	99999999	99999999	99999999	99999999	99999999
JOINT (HISPANIC OR LATINO/ NOT HISPANIC OR LATINO)	99999999	99999999	99999999	99999999	99999999	99999999	99999999	99999999	99999999	99999999	99999999	99999999
ETHNICITY NOT AVAILABLE 6/	99999999	99999999	99999999	99999999	99999999	99999999	99999999	99999999	99999999	99999999	99999999	99999999
MINORITY STATUS 8/												
WHITE NON-HISPANIC	99999999	99999999	99999999	99999999	99999999	99999999	99999999	99999999	99999999	99999999	99999999	99999999
OTHERS, INCLUDING HISPANIC	99999999	99999999	99999999	99999999	99999999	99999999	99999999	99999999	99999999	99999999	99999999	99999999

TABLE 5-5: DISPOSITION OF APPLICATIONS FOR LOANS ON DWELLINGS FOR 5 OR MORE FAMILIES, BY INCOME, RACE AND ETHNICITY OF APPLICANT, 2004

PAGE: 9999
RUN DATE: MM/DD/CCYY

INSTITUTION: XXXXXXXXXX-X XXXXXXXXXXXXXXXXXXXXXXXXXXXXX

MSA/MD: 99999 - XXXXXXXXXXXXXXXXXXXXXXXXXXXXXXXXXXXXXXXX

INCOME, RACE AND ETHNICITY CONTINUED	APPLICATIONS RECEIVED 20/		LOANS ORIGINATED		APPS. APPROVED BUT NOT ACCEPTED		APPLICATIONS DENIED		APPLICATIONS WITHDRAWN		FILES CLOSED FOR INCOMPLETENESS	
	NUMBER	$000'S	NUMBER	$000'S	NUMBER	$000'S	NUMBER	$000'S	NUMBER	$000'S	NUMBER	$000'S
120% OR MORE OF MSA/MD MEDIAN												
RACE 5/												
AMERICAN INDIAN/ALASKA NATIVE	99999999	99999999	99999999	99999999	99999999	99999999	99999999	99999999	99999999	99999999	99999999	99999999
ASIAN	99999999	99999999	99999999	99999999	99999999	99999999	99999999	99999999	99999999	99999999	99999999	99999999
BLACK OR AFRICAN AMERICAN	99999999	99999999	99999999	99999999	99999999	99999999	99999999	99999999	99999999	99999999	99999999	99999999
NATIVE HAWAIIAN/OTHER PACIFIC ISL	99999999	99999999	99999999	99999999	99999999	99999999	99999999	99999999	99999999	99999999	99999999	99999999
WHITE	99999999	99999999	99999999	99999999	99999999	99999999	99999999	99999999	99999999	99999999	99999999	99999999
2 OR MORE MINORITY RACES	99999999	99999999	99999999	99999999	99999999	99999999	99999999	99999999	99999999	99999999	99999999	99999999
JOINT (WHITE/MINORITY RACE)	99999999	99999999	99999999	99999999	99999999	99999999	99999999	99999999	99999999	99999999	99999999	99999999
RACE NOT AVAILABLE 6/	99999999	99999999	99999999	99999999	99999999	99999999	99999999	99999999	99999999	99999999	99999999	99999999
ETHNICITY 7/												
HISPANIC OR LATINO	99999999	99999999	99999999	99999999	99999999	99999999	99999999	99999999	99999999	99999999	99999999	99999999
NOT HISPANIC OR LATINO	99999999	99999999	99999999	99999999	99999999	99999999	99999999	99999999	99999999	99999999	99999999	99999999
JOINT (HISPANIC OR LATINO/ NOT HISPANIC OR LATINO)	99999999	99999999	99999999	99999999	99999999	99999999	99999999	99999999	99999999	99999999	99999999	99999999
ETHNICITY NOT AVAILABLE 6/	99999999	99999999	99999999	99999999	99999999	99999999	99999999	99999999	99999999	99999999	99999999	99999999
MINORITY STATUS 8/												
WHITE NON-HISPANIC	99999999	99999999	99999999	99999999	99999999	99999999	99999999	99999999	99999999	99999999	99999999	99999999
OTHERS, INCLUDING HISPANIC	99999999	99999999	99999999	99999999	99999999	99999999	99999999	99999999	99999999	99999999	99999999	99999999
TOTAL 14/	99999999	99999999	99999999	99999999	99999999	99999999	99999999	99999999	99999999	99999999	99999999	99999999

TABLE 5-6: DISPOSITION OF APPLICATIONS FROM NONOCCUPANTS FOR HOME-PURCHASE, HOME IMPROVEMENT, OR REFINANCING LOANS, 1- TO 4-FAMILY AND MANUFACTURED HOME DWELLINGS, BY INCOME, RACE AND ETHNICITY OF APPLICANT, 2004

PAGE: 9999
RUN DATE: MM/DD/CCYY

INSTITUTION: XXXXXXXXXX-X XXXXXXXXXXXXXXXXXXXXXXXXXXXXXX

MSA/MD: 99999 - XXXXXXXXXXXXXXXXXXXXXXXXXXXXXXXXXXXXXXXX

INCOME, RACE AND ETHNICITY	APPLICATIONS RECEIVED 20/		LOANS ORIGINATED		APPS. APPROVED BUT NOT ACCEPTED		APPLICATIONS DENIED		APPLICATIONS WITHDRAWN		FILES CLOSED FOR INCOMPLETENESS	
	NUMBER	$000'S	NUMBER	$000'S	NUMBER	$000'S	NUMBER	$000'S	NUMBER	$000'S	NUMBER	$000'S
LESS THAN 50% OF MSA/MD MEDIAN												
RACE 5/												
AMERICAN INDIAN/ALASKA NATIVE	99999999	99999999	99999999	99999999	99999999	99999999	99999999	99999999	99999999	99999999	99999999	99999999
ASIAN	99999999	99999999	99999999	99999999	99999999	99999999	99999999	99999999	99999999	99999999	99999999	99999999
BLACK OR AFRICAN AMERICAN	99999999	99999999	99999999	99999999	99999999	99999999	99999999	99999999	99999999	99999999	99999999	99999999
NATIVE HAWAIIAN/OTHER PACIFIC ISL	99999999	99999999	99999999	99999999	99999999	99999999	99999999	99999999	99999999	99999999	99999999	99999999
WHITE	99999999	99999999	99999999	99999999	99999999	99999999	99999999	99999999	99999999	99999999	99999999	99999999
2 OR MORE MINORITY RACES	99999999	99999999	99999999	99999999	99999999	99999999	99999999	99999999	99999999	99999999	99999999	99999999
JOINT (WHITE/MINORITY RACE)	99999999	99999999	99999999	99999999	99999999	99999999	99999999	99999999	99999999	99999999	99999999	99999999
RACE NOT AVAILABLE 6/	99999999	99999999	99999999	99999999	99999999	99999999	99999999	99999999	99999999	99999999	99999999	99999999
ETHNICITY 7/												
HISPANIC OR LATINO	99999999	99999999	99999999	99999999	99999999	99999999	99999999	99999999	99999999	99999999	99999999	99999999
NOT HISPANIC OR LATINO	99999999	99999999	99999999	99999999	99999999	99999999	99999999	99999999	99999999	99999999	99999999	99999999
JOINT (HISPANIC OR LATINO/ NOT HISPANIC OR LATINO)	99999999	99999999	99999999	99999999	99999999	99999999	99999999	99999999	99999999	99999999	99999999	99999999
ETHNICITY NOT AVAILABLE 6/	99999999	99999999	99999999	99999999	99999999	99999999	99999999	99999999	99999999	99999999	99999999	99999999
MINORITY STATUS 8/												
WHITE NON-HISPANIC	99999999	99999999	99999999	99999999	99999999	99999999	99999999	99999999	99999999	99999999	99999999	99999999
OTHERS, INCLUDING HISPANIC	99999999	99999999	99999999	99999999	99999999	99999999	99999999	99999999	99999999	99999999	99999999	99999999
50-79% OF MSA/MD MEDIAN												
RACE 5/												
AMERICAN INDIAN/ALASKA NATIVE	99999999	99999999	99999999	99999999	99999999	99999999	99999999	99999999	99999999	99999999	99999999	99999999
ASIAN	99999999	99999999	99999999	99999999	99999999	99999999	99999999	99999999	99999999	99999999	99999999	99999999
BLACK OR AFRICAN AMERICAN	99999999	99999999	99999999	99999999	99999999	99999999	99999999	99999999	99999999	99999999	99999999	99999999
NATIVE HAWAIIAN/OTHER PACIFIC ISL	99999999	99999999	99999999	99999999	99999999	99999999	99999999	99999999	99999999	99999999	99999999	99999999
WHITE	99999999	99999999	99999999	99999999	99999999	99999999	99999999	99999999	99999999	99999999	99999999	99999999
2 OR MORE MINORITY RACES	99999999	99999999	99999999	99999999	99999999	99999999	99999999	99999999	99999999	99999999	99999999	99999999
JOINT (WHITE/MINORITY RACE)	99999999	99999999	99999999	99999999	99999999	99999999	99999999	99999999	99999999	99999999	99999999	99999999
RACE NOT AVAILABLE 6/	99999999	99999999	99999999	99999999	99999999	99999999	99999999	99999999	99999999	99999999	99999999	99999999
ETHNICITY 7/												
HISPANIC OR LATINO	99999999	99999999	99999999	99999999	99999999	99999999	99999999	99999999	99999999	99999999	99999999	99999999
NOT HISPANIC OR LATINO	99999999	99999999	99999999	99999999	99999999	99999999	99999999	99999999	99999999	99999999	99999999	99999999
JOINT (HISPANIC OR LATINO/ NOT HISPANIC OR LATINO)	99999999	99999999	99999999	99999999	99999999	99999999	99999999	99999999	99999999	99999999	99999999	99999999
ETHNICITY NOT AVAILABLE 6/	99999999	99999999	99999999	99999999	99999999	99999999	99999999	99999999	99999999	99999999	99999999	99999999
MINORITY STATUS 8/												
WHITE NON-HISPANIC	99999999	99999999	99999999	99999999	99999999	99999999	99999999	99999999	99999999	99999999	99999999	99999999
OTHERS, INCLUDING HISPANIC	99999999	99999999	99999999	99999999	99999999	99999999	99999999	99999999	99999999	99999999	99999999	99999999

TABLE 5-6: DISPOSITION OF APPLICATIONS FROM NONOCCUPANTS FOR HOME-PURCHASE, HOME IMPROVEMENT, OR REFINANCING LOANS, 1- TO 4-FAMILY AND MANUFACTURED HOME DWELLINGS, BY INCOME, RACE AND ETHNICITY OF APPLICANT, 2004

PAGE: 9999
RUN DATE: MM/DD/CCYY

INSTITUTION: XXXXXXXXXX-X XXXXXXXXXXXXXXXXXXXXXXXXXXXX

MSA/MD: 99999 - XXXXXXXXXXXXXXXXXXXXXXXXXXXXXXXXXXXXXXXX

INCOME, RACE AND ETHNICITY CONTINUED	APPLICATIONS RECEIVED 20/		LOANS ORIGINATED		APPS. APPROVED BUT NOT ACCEPTED		APPLICATIONS DENIED		APPLICATIONS WITHDRAWN		FILES CLOSED FOR INCOMPLETENESS	
	NUMBER	$000'S	NUMBER	$000'S	NUMBER	$000'S	NUMBER	$000'S	NUMBER	$000'S	NUMBER	$000'S
80-99% OF MSA/MD MEDIAN												
RACE 5/												
AMERICAN INDIAN/ALASKA NATIVE	99999999	99999999	99999999	99999999	99999999	99999999	99999999	99999999	99999999	99999999	99999999	99999999
ASIAN	99999999	99999999	99999999	99999999	99999999	99999999	99999999	99999999	99999999	99999999	99999999	99999999
BLACK OR AFRICAN AMERICAN	99999999	99999999	99999999	99999999	99999999	99999999	99999999	99999999	99999999	99999999	99999999	99999999
NATIVE HAWAIIAN/OTHER PACIFIC ISL	99999999	99999999	99999999	99999999	99999999	99999999	99999999	99999999	99999999	99999999	99999999	99999999
WHITE	99999999	99999999	99999999	99999999	99999999	99999999	99999999	99999999	99999999	99999999	99999999	99999999
2 OR MORE MINORITY RACES	99999999	99999999	99999999	99999999	99999999	99999999	99999999	99999999	99999999	99999999	99999999	99999999
JOINT (WHITE/MINORITY RACE)	99999999	99999999	99999999	99999999	99999999	99999999	99999999	99999999	99999999	99999999	99999999	99999999
RACE NOT AVAILABLE 6/	99999999	99999999	99999999	99999999	99999999	99999999	99999999	99999999	99999999	99999999	99999999	99999999
ETHNICITY 7/												
HISPANIC OR LATINO	99999999	99999999	99999999	99999999	99999999	99999999	99999999	99999999	99999999	99999999	99999999	99999999
NOT HISPANIC OR LATINO	99999999	99999999	99999999	99999999	99999999	99999999	99999999	99999999	99999999	99999999	99999999	99999999
JOINT (HISPANIC OR LATINO/ NOT HISPANIC OR LATINO)	99999999	99999999	99999999	99999999	99999999	99999999	99999999	99999999	99999999	99999999	99999999	99999999
ETHNICITY NOT AVAILABLE 6/	99999999	99999999	99999999	99999999	99999999	99999999	99999999	99999999	99999999	99999999	99999999	99999999
MINORITY STATUS 8/												
WHITE NON-HISPANIC	99999999	99999999	99999999	99999999	99999999	99999999	99999999	99999999	99999999	99999999	99999999	99999999
OTHERS, INCLUDING HISPANIC	99999999	99999999	99999999	99999999	99999999	99999999	99999999	99999999	99999999	99999999	99999999	99999999
100-119% OF MSA/MD MEDIAN												
RACE 5/												
AMERICAN INDIAN/ALASKA NATIVE	99999999	99999999	99999999	99999999	99999999	99999999	99999999	99999999	99999999	99999999	99999999	99999999
ASIAN	99999999	99999999	99999999	99999999	99999999	99999999	99999999	99999999	99999999	99999999	99999999	99999999
BLACK OR AFRICAN AMERICAN	99999999	99999999	99999999	99999999	99999999	99999999	99999999	99999999	99999999	99999999	99999999	99999999
NATIVE HAWAIIAN/OTHER PACIFIC ISL	99999999	99999999	99999999	99999999	99999999	99999999	99999999	99999999	99999999	99999999	99999999	99999999
WHITE	99999999	99999999	99999999	99999999	99999999	99999999	99999999	99999999	99999999	99999999	99999999	99999999
2 OR MORE MINORITY RACES	99999999	99999999	99999999	99999999	99999999	99999999	99999999	99999999	99999999	99999999	99999999	99999999
JOINT (WHITE/MINORITY RACE)	99999999	99999999	99999999	99999999	99999999	99999999	99999999	99999999	99999999	99999999	99999999	99999999
RACE NOT AVAILABLE 6/	99999999	99999999	99999999	99999999	99999999	99999999	99999999	99999999	99999999	99999999	99999999	99999999
ETHNICITY 7/												
HISPANIC OR LATINO	99999999	99999999	99999999	99999999	99999999	99999999	99999999	99999999	99999999	99999999	99999999	99999999
NOT HISPANIC OR LATINO	99999999	99999999	99999999	99999999	99999999	99999999	99999999	99999999	99999999	99999999	99999999	99999999
JOINT (HISPANIC OR LATINO/ NOT HISPANIC OR LATINO)	99999999	99999999	99999999	99999999	99999999	99999999	99999999	99999999	99999999	99999999	99999999	99999999
ETHNICITY NOT AVAILABLE 6/	99999999	99999999	99999999	99999999	99999999	99999999	99999999	99999999	99999999	99999999	99999999	99999999
MINORITY STATUS 8/												
WHITE NON-HISPANIC	99999999	99999999	99999999	99999999	99999999	99999999	99999999	99999999	99999999	99999999	99999999	99999999
OTHERS, INCLUDING HISPANIC	99999999	99999999	99999999	99999999	99999999	99999999	99999999	99999999	99999999	99999999	99999999	99999999

TABLE 5-6: DISPOSITION OF APPLICATIONS FROM NONOCCUPANTS FOR HOME-PURCHASE, HOME IMPROVEMENT, OR REFINANCING LOANS, 1- TO 4-FAMILY AND MANUFACTURED HOME DWELLINGS, BY INCOME, RACE AND ETHNICITY OF APPLICANT, 2004

PAGE: 9999
RUN DATE: MM/DD/CCYY

INSTITUTION: XXXXXXXXXX-X XXXXXXXXXXXXXXXXXXXXXXXXXXXX

MSA/MD: 99999 - XXXXXXXXXXXXXXXXXXXXXXXXXXXXXXXXXXXXXXXX

INCOME, RACE AND ETHNICITY CONTINUED	APPLICATIONS RECEIVED 20/		LOANS ORIGINATED		APPS. APPROVED BUT NOT ACCEPTED		APPLICATIONS DENIED		APPLICATIONS WITHDRAWN		FILES CLOSED FOR INCOMPLETENESS	
	NUMBER	$000'S	NUMBER	$000'S	NUMBER	$000'S	NUMBER	$000'S	NUMBER	$000'S	NUMBER	$000'S
120% OR MORE OF MSA/MD MEDIAN												
RACE 5/												
AMERICAN INDIAN/ALASKA NATIVE	99999999	99999999	99999999	99999999	99999999	99999999	99999999	99999999	99999999	99999999	99999999	99999999
ASIAN	99999999	99999999	99999999	99999999	99999999	99999999	99999999	99999999	99999999	99999999	99999999	99999999
BLACK OR AFRICAN AMERICAN	99999999	99999999	99999999	99999999	99999999	99999999	99999999	99999999	99999999	99999999	99999999	99999999
NATIVE HAWAIIAN/OTHER PACIFIC ISL	99999999	99999999	99999999	99999999	99999999	99999999	99999999	99999999	99999999	99999999	99999999	99999999
WHITE	99999999	99999999	99999999	99999999	99999999	99999999	99999999	99999999	99999999	99999999	99999999	99999999
2 OR MORE MINORITY RACES	99999999	99999999	99999999	99999999	99999999	99999999	99999999	99999999	99999999	99999999	99999999	99999999
JOINT (WHITE/MINORITY RACE)	99999999	99999999	99999999	99999999	99999999	99999999	99999999	99999999	99999999	99999999	99999999	99999999
RACE NOT AVAILABLE 6/	99999999	99999999	99999999	99999999	99999999	99999999	99999999	99999999	99999999	99999999	99999999	99999999
ETHNICITY 7/												
HISPANIC OR LATINO	99999999	99999999	99999999	99999999	99999999	99999999	99999999	99999999	99999999	99999999	99999999	99999999
NOT HISPANIC OR LATINO	99999999	99999999	99999999	99999999	99999999	99999999	99999999	99999999	99999999	99999999	99999999	99999999
JOINT (HISPANIC OR LATINO/ NOT HISPANIC OR LATINO)	99999999	99999999	99999999	99999999	99999999	99999999	99999999	99999999	99999999	99999999	99999999	99999999
ETHNICITY NOT AVAILABLE 6/	99999999	99999999	99999999	99999999	99999999	99999999	99999999	99999999	99999999	99999999	99999999	99999999
MINORITY STATUS 8/												
WHITE NON-HISPANIC	99999999	99999999	99999999	99999999	99999999	99999999	99999999	99999999	99999999	99999999	99999999	99999999
OTHERS, INCLUDING HISPANIC	99999999	99999999	99999999	99999999	99999999	99999999	99999999	99999999	99999999	99999999	99999999	99999999
TOTAL 14/	99999999	99999999	99999999	99999999	99999999	99999999	99999999	99999999	99999999	99999999	99999999	99999999

TABLE 5-7: DISPOSITION OF APPLICATIONS FOR HOME-PURCHASE, HOME IMPROVEMENT, OR REFINANCING LOANS, MANUFACTURED HOME DWELLINGS, BY INCOME, RACE AND ETHNICITY OF APPLICANT, 2004

PAGE: 9999
RUN DATE: MM/DD/CCYY

INSTITUTION: XXXXXXXXXX-X XXXXXXXXXXXXXXXXXXXXXXXXXXXXX

MSA/MD: 99999 - XXXXXXXXXXXXXXXXXXXXXXXXXXXXXXXXXXXXXXXX

INCOME, RACE AND ETHNICITY	APPLICATIONS RECEIVED 20/		LOANS ORIGINATED		APPS. APPROVED BUT NOT ACCEPTED		APPLICATIONS DENIED		APPLICATIONS WITHDRAWN		FILES CLOSED FOR INCOMPLETENESS	
	NUMBER	$000'S	NUMBER	$000'S	NUMBER	$000'S	NUMBER	$000'S	NUMBER	$000'S	NUMBER	$000'S
LESS THAN 50% OF MSA/MD MEDIAN												
RACE 5/												
AMERICAN INDIAN/ALASKA NATIVE	99999999	99999999	99999999	99999999	99999999	99999999	99999999	99999999	99999999	99999999	99999999	99999999
ASIAN	99999999	99999999	99999999	99999999	99999999	99999999	99999999	99999999	99999999	99999999	99999999	99999999
BLACK OR AFRICAN AMERICAN	99999999	99999999	99999999	99999999	99999999	99999999	99999999	99999999	99999999	99999999	99999999	99999999
NATIVE HAWAIIAN/OTHER PACIFIC ISL	99999999	99999999	99999999	99999999	99999999	99999999	99999999	99999999	99999999	99999999	99999999	99999999
WHITE	99999999	99999999	99999999	99999999	99999999	99999999	99999999	99999999	99999999	99999999	99999999	99999999
2 OR MORE MINORITY RACES	99999999	99999999	99999999	99999999	99999999	99999999	99999999	99999999	99999999	99999999	99999999	99999999
JOINT (WHITE/MINORITY RACE)	99999999	99999999	99999999	99999999	99999999	99999999	99999999	99999999	99999999	99999999	99999999	99999999
RACE NOT AVAILABLE 6/	99999999	99999999	99999999	99999999	99999999	99999999	99999999	99999999	99999999	99999999	99999999	99999999
ETHNICITY 7/												
HISPANIC OR LATINO	99999999	99999999	99999999	99999999	99999999	99999999	99999999	99999999	99999999	99999999	99999999	99999999
NOT HISPANIC OR LATINO	99999999	99999999	99999999	99999999	99999999	99999999	99999999	99999999	99999999	99999999	99999999	99999999
JOINT (HISPANIC OR LATINO/ NOT HISPANIC OR LATINO)	99999999	99999999	99999999	99999999	99999999	99999999	99999999	99999999	99999999	99999999	99999999	99999999
ETHNICITY NOT AVAILABLE 6/	99999999	99999999	99999999	99999999	99999999	99999999	99999999	99999999	99999999	99999999	99999999	99999999
MINORITY STATUS 8/												
WHITE NON-HISPANIC	99999999	99999999	99999999	99999999	99999999	99999999	99999999	99999999	99999999	99999999	99999999	99999999
OTHERS, INCLUDING HISPANIC	99999999	99999999	99999999	99999999	99999999	99999999	99999999	99999999	99999999	99999999	99999999	99999999
50-79% OF MSA/MD MEDIAN												
RACE 5/												
AMERICAN INDIAN/ALASKA NATIVE	99999999	99999999	99999999	99999999	99999999	99999999	99999999	99999999	99999999	99999999	99999999	99999999
ASIAN	99999999	99999999	99999999	99999999	99999999	99999999	99999999	99999999	99999999	99999999	99999999	99999999
BLACK OR AFRICAN AMERICAN	99999999	99999999	99999999	99999999	99999999	99999999	99999999	99999999	99999999	99999999	99999999	99999999
NATIVE HAWAIIAN/OTHER PACIFIC ISL	99999999	99999999	99999999	99999999	99999999	99999999	99999999	99999999	99999999	99999999	99999999	99999999
WHITE	99999999	99999999	99999999	99999999	99999999	99999999	99999999	99999999	99999999	99999999	99999999	99999999
2 OR MORE MINORITY RACES	99999999	99999999	99999999	99999999	99999999	99999999	99999999	99999999	99999999	99999999	99999999	99999999
JOINT (WHITE/MINORITY RACE)	99999999	99999999	99999999	99999999	99999999	99999999	99999999	99999999	99999999	99999999	99999999	99999999
RACE NOT AVAILABLE 6/	99999999	99999999	99999999	99999999	99999999	99999999	99999999	99999999	99999999	99999999	99999999	99999999
ETHNICITY 7/												
HISPANIC OR LATINO	99999999	99999999	99999999	99999999	99999999	99999999	99999999	99999999	99999999	99999999	99999999	99999999
NOT HISPANIC OR LATINO	99999999	99999999	99999999	99999999	99999999	99999999	99999999	99999999	99999999	99999999	99999999	99999999
JOINT (HISPANIC OR LATINO/ NOT HISPANIC OR LATINO)	99999999	99999999	99999999	99999999	99999999	99999999	99999999	99999999	99999999	99999999	99999999	99999999
ETHNICITY NOT AVAILABLE 6/	99999999	99999999	99999999	99999999	99999999	99999999	99999999	99999999	99999999	99999999	99999999	99999999
MINORITY STATUS 8/												
WHITE NON-HISPANIC	99999999	99999999	99999999	99999999	99999999	99999999	99999999	99999999	99999999	99999999	99999999	99999999
OTHERS, INCLUDING HISPANIC	99999999	99999999	99999999	99999999	99999999	99999999	99999999	99999999	99999999	99999999	99999999	99999999

TABLE 5-7: DISPOSITION OF APPLICATIONS FOR HOME-PURCHASE, HOME IMPROVEMENT, OR REFINANCING LOANS, MANUFACTURED HOME DWELLINGS, BY INCOME, RACE AND ETHNICITY OF APPLICANT, 2004

PAGE: 9999
RUN DATE: MM/DD/CCYY

INSTITUTION: XXXXXXXXXX-X XXXXXXXXXXXXXXXXXXXXXXXXXXXXXX

MSA/MD: 99999 - XXXXXXXXXXXXXXXXXXXXXXXXXXXXXXXXXXXXXXXX

INCOME, RACE AND ETHNICITY CONTINUED	APPLICATIONS RECEIVED 20/		LOANS ORIGINATED		APPS. APPROVED BUT NOT ACCEPTED		APPLICATIONS DENIED		APPLICATIONS WITHDRAWN		FILES CLOSED FOR INCOMPLETENESS	
	NUMBER	$000'S	NUMBER	$000'S	NUMBER	$000'S	NUMBER	$000'S	NUMBER	$000'S	NUMBER	$000'S
80-99% OF MSA/MD MEDIAN												
RACE 5/												
AMERICAN INDIAN/ALASKA NATIVE	99999999	99999999	99999999	99999999	99999999	99999999	99999999	99999999	99999999	99999999	99999999	99999999
ASIAN	99999999	99999999	99999999	99999999	99999999	99999999	99999999	99999999	99999999	99999999	99999999	99999999
BLACK OR AFRICAN AMERICAN	99999999	99999999	99999999	99999999	99999999	99999999	99999999	99999999	99999999	99999999	99999999	99999999
NATIVE HAWAIIAN/OTHER PACIFIC ISL	99999999	99999999	99999999	99999999	99999999	99999999	99999999	99999999	99999999	99999999	99999999	99999999
WHITE	99999999	99999999	99999999	99999999	99999999	99999999	99999999	99999999	99999999	99999999	99999999	99999999
2 OR MORE MINORITY RACES	99999999	99999999	99999999	99999999	99999999	99999999	99999999	99999999	99999999	99999999	99999999	99999999
JOINT (WHITE/MINORITY RACE)	99999999	99999999	99999999	99999999	99999999	99999999	99999999	99999999	99999999	99999999	99999999	99999999
RACE NOT AVAILABLE 6/	99999999	99999999	99999999	99999999	99999999	99999999	99999999	99999999	99999999	99999999	99999999	99999999
ETHNICITY 7/												
HISPANIC OR LATINO	99999999	99999999	99999999	99999999	99999999	99999999	99999999	99999999	99999999	99999999	99999999	99999999
NOT HISPANIC OR LATINO	99999999	99999999	99999999	99999999	99999999	99999999	99999999	99999999	99999999	99999999	99999999	99999999
JOINT (HISPANIC OR LATINO/ NOT HISPANIC OR LATINO)	99999999	99999999	99999999	99999999	99999999	99999999	99999999	99999999	99999999	99999999	99999999	99999999
ETHNICITY NOT AVAILABLE 6/	99999999	99999999	99999999	99999999	99999999	99999999	99999999	99999999	99999999	99999999	99999999	99999999
MINORITY STATUS 8/												
WHITE NON-HISPANIC	99999999	99999999	99999999	99999999	99999999	99999999	99999999	99999999	99999999	99999999	99999999	99999999
OTHERS, INCLUDING HISPANIC	99999999	99999999	99999999	99999999	99999999	99999999	99999999	99999999	99999999	99999999	99999999	99999999
100-119% OF MSA/MD MEDIAN												
RACE 5/												
AMERICAN INDIAN/ALASKA NATIVE	99999999	99999999	99999999	99999999	99999999	99999999	99999999	99999999	99999999	99999999	99999999	99999999
ASIAN	99999999	99999999	99999999	99999999	99999999	99999999	99999999	99999999	99999999	99999999	99999999	99999999
BLACK OR AFRICAN AMERICAN	99999999	99999999	99999999	99999999	99999999	99999999	99999999	99999999	99999999	99999999	99999999	99999999
NATIVE HAWAIIAN/OTHER PACIFIC ISL	99999999	99999999	99999999	99999999	99999999	99999999	99999999	99999999	99999999	99999999	99999999	99999999
WHITE	99999999	99999999	99999999	99999999	99999999	99999999	99999999	99999999	99999999	99999999	99999999	99999999
2 OR MORE MINORITY RACES	99999999	99999999	99999999	99999999	99999999	99999999	99999999	99999999	99999999	99999999	99999999	99999999
JOINT (WHITE/MINORITY RACE)	99999999	99999999	99999999	99999999	99999999	99999999	99999999	99999999	99999999	99999999	99999999	99999999
RACE NOT AVAILABLE 6/	99999999	99999999	99999999	99999999	99999999	99999999	99999999	99999999	99999999	99999999	99999999	99999999
ETHNICITY 7/												
HISPANIC OR LATINO	99999999	99999999	99999999	99999999	99999999	99999999	99999999	99999999	99999999	99999999	99999999	99999999
NOT HISPANIC OR LATINO	99999999	99999999	99999999	99999999	99999999	99999999	99999999	99999999	99999999	99999999	99999999	99999999
JOINT (HISPANIC OR LATINO/ NOT HISPANIC OR LATINO)	99999999	99999999	99999999	99999999	99999999	99999999	99999999	99999999	99999999	99999999	99999999	99999999
ETHNICITY NOT AVAILABLE 6/	99999999	99999999	99999999	99999999	99999999	99999999	99999999	99999999	99999999	99999999	99999999	99999999
MINORITY STATUS 8/												
WHITE NON-HISPANIC	99999999	99999999	99999999	99999999	99999999	99999999	99999999	99999999	99999999	99999999	99999999	99999999
OTHERS, INCLUDING HISPANIC	99999999	99999999	99999999	99999999	99999999	99999999	99999999	99999999	99999999	99999999	99999999	99999999

TABLE 5-7: DISPOSITION OF APPLICATIONS FOR HOME-PURCHASE, HOME IMPROVEMENT, OR REFINANCING LOANS, MANUFACTURED HOME DWELLINGS, BY INCOME, RACE AND ETHNICITY OF APPLICANT, 2004

PAGE: 9999
RUN DATE: MM/DD/CCYY

INSTITUTION: XXXXXXXXXX-X XXXXXXXXXXXXXXXXXXXXXXXXXXXXX

MSA/MD: 99999 - XXXXXXXXXXXXXXXXXXXXXXXXXXXXXXXXXXXXXXXX

INCOME, RACE AND ETHNICITY CONTINUED	APPLICATIONS RECEIVED 20/		LOANS ORIGINATED		APPS. APPROVED BUT NOT ACCEPTED		APPLICATIONS DENIED		APPLICATIONS WITHDRAWN		FILES CLOSED FOR INCOMPLETENESS	
	NUMBER	$000'S	NUMBER	$000'S	NUMBER	$000'S	NUMBER	$000'S	NUMBER	$000'S	NUMBER	$000'S
120% OR MORE OF MSA/MD MEDIAN												
RACE 5/												
AMERICAN INDIAN/ALASKA NATIVE	99999999	99999999	99999999	99999999	99999999	99999999	99999999	99999999	99999999	99999999	99999999	99999999
ASIAN	99999999	99999999	99999999	99999999	99999999	99999999	99999999	99999999	99999999	99999999	99999999	99999999
BLACK OR AFRICAN AMERICAN	99999999	99999999	99999999	99999999	99999999	99999999	99999999	99999999	99999999	99999999	99999999	99999999
NATIVE HAWAIIAN/OTHER PACIFIC ISL	99999999	99999999	99999999	99999999	99999999	99999999	99999999	99999999	99999999	99999999	99999999	99999999
WHITE	99999999	99999999	99999999	99999999	99999999	99999999	99999999	99999999	99999999	99999999	99999999	99999999
2 OR MORE MINORITY RACES	99999999	99999999	99999999	99999999	99999999	99999999	99999999	99999999	99999999	99999999	99999999	99999999
JOINT (WHITE/MINORITY RACE)	99999999	99999999	99999999	99999999	99999999	99999999	99999999	99999999	99999999	99999999	99999999	99999999
RACE NOT AVAILABLE 6/	99999999	99999999	99999999	99999999	99999999	99999999	99999999	99999999	99999999	99999999	99999999	99999999
ETHNICITY 7/												
HISPANIC OR LATINO	99999999	99999999	99999999	99999999	99999999	99999999	99999999	99999999	99999999	99999999	99999999	99999999
NOT HISPANIC OR LATINO	99999999	99999999	99999999	99999999	99999999	99999999	99999999	99999999	99999999	99999999	99999999	99999999
JOINT (HISPANIC OR LATINO/ NOT HISPANIC OR LATINO)	99999999	99999999	99999999	99999999	99999999	99999999	99999999	99999999	99999999	99999999	99999999	99999999
ETHNICITY NOT AVAILABLE 6/	99999999	99999999	99999999	99999999	99999999	99999999	99999999	99999999	99999999	99999999	99999999	99999999
MINORITY STATUS 8/												
WHITE NON-HISPANIC	99999999	99999999	99999999	99999999	99999999	99999999	99999999	99999999	99999999	99999999	99999999	99999999
OTHERS, INCLUDING HISPANIC	99999999	99999999	99999999	99999999	99999999	99999999	99999999	99999999	99999999	99999999	99999999	99999999
TOTAL 14/	99999999	99999999	99999999	99999999	99999999	99999999	99999999	99999999	99999999	99999999	99999999	99999999

TABLE 7-1: DISPOSITION OF APPLICATIONS FOR FHA, FSA/RHS, AND VA HOME-PURCHASE LOANS, 1- TO 4-FAMILY AND MANUFACTURED HOME DWELLINGS, BY CHARACTERISTICS OF CENSUS TRACT IN WHICH PROPERTY IS LOCATED, 2004

PAGE: 9999
RUN DATE: MM/DD/CCYY

INSTITUTION: XXXXXXXXXX-X XXXXXXXXXXXXXXXXXXXXXXXXXXXXXX

MSA/MD: 99999 - XXXXXXXXXXXXXXXXXXXXXXXXXXXXXXXXXXXXXXXXXX

TYPE OF CENSUS TRACT 10/	APPLICATIONS RECEIVED 20/		LOANS ORIGINATED		APPS. APPROVED BUT NOT ACCEPTED		APPLICATIONS DENIED		APPLICATIONS WITHDRAWN		FILES CLOSED FOR INCOMPLETENESS	
	NUMBER	$000'S	NUMBER	$000'S	NUMBER	$000'S	NUMBER	$000'S	NUMBER	$000'S	NUMBER	$000'S
RACIAL/ETHNIC COMPOSITION 11/												
LESS THAN 10% MINORITY	99999999	99999999	99999999	99999999	99999999	99999999	99999999	99999999	99999999	99999999	99999999	99999999
10-19% MINORITY	99999999	99999999	99999999	99999999	99999999	99999999	99999999	99999999	99999999	99999999	99999999	99999999
20-49% MINORITY	99999999	99999999	99999999	99999999	99999999	99999999	99999999	99999999	99999999	99999999	99999999	99999999
50-79% MINORITY	99999999	99999999	99999999	99999999	99999999	99999999	99999999	99999999	99999999	99999999	99999999	99999999
80-100% MINORITY	99999999	99999999	99999999	99999999	99999999	99999999	99999999	99999999	99999999	99999999	99999999	99999999
INCOME CHARACTERISTICS 12/, 13/												
LOW INCOME	99999999	99999999	99999999	99999999	99999999	99999999	99999999	99999999	99999999	99999999	99999999	99999999
MODERATE INCOME	99999999	99999999	99999999	99999999	99999999	99999999	99999999	99999999	99999999	99999999	99999999	99999999
MIDDLE INCOME	99999999	99999999	99999999	99999999	99999999	99999999	99999999	99999999	99999999	99999999	99999999	99999999
UPPER INCOME	99999999	99999999	99999999	99999999	99999999	99999999	99999999	99999999	99999999	99999999	99999999	99999999
INCOME AND RACIAL/ETHNIC COMP 11/,12/ 13/												
LOW INCOME												
LESS THAN 10% MINORITY	99999999	99999999	99999999	99999999	99999999	99999999	99999999	99999999	99999999	99999999	99999999	99999999
10-19% MINORITY	99999999	99999999	99999999	99999999	99999999	99999999	99999999	99999999	99999999	99999999	99999999	99999999
20-49% MINORITY	99999999	99999999	99999999	99999999	99999999	99999999	99999999	99999999	99999999	99999999	99999999	99999999
50-79% MINORITY	99999999	99999999	99999999	99999999	99999999	99999999	99999999	99999999	99999999	99999999	99999999	99999999
80-100% MINORITY	99999999	99999999	99999999	99999999	99999999	99999999	99999999	99999999	99999999	99999999	99999999	99999999
MODERATE INCOME												
LESS THAN 10% MINORITY	99999999	99999999	99999999	99999999	99999999	99999999	99999999	99999999	99999999	99999999	99999999	99999999
10-19% MINORITY	99999999	99999999	99999999	99999999	99999999	99999999	99999999	99999999	99999999	99999999	99999999	99999999
20-49% MINORITY	99999999	99999999	99999999	99999999	99999999	99999999	99999999	99999999	99999999	99999999	99999999	99999999
50-79% MINORITY	99999999	99999999	99999999	99999999	99999999	99999999	99999999	99999999	99999999	99999999	99999999	99999999
80-100% MINORITY	99999999	99999999	99999999	99999999	99999999	99999999	99999999	99999999	99999999	99999999	99999999	99999999
MIDDLE INCOME												
LESS THAN 10% MINORITY	99999999	99999999	99999999	99999999	99999999	99999999	99999999	99999999	99999999	99999999	99999999	99999999
10-19% MINORITY	99999999	99999999	99999999	99999999	99999999	99999999	99999999	99999999	99999999	99999999	99999999	99999999
20-49% MINORITY	99999999	99999999	99999999	99999999	99999999	99999999	99999999	99999999	99999999	99999999	99999999	99999999
50-79% MINORITY	99999999	99999999	99999999	99999999	99999999	99999999	99999999	99999999	99999999	99999999	99999999	99999999
80-100% MINORITY	99999999	99999999	99999999	99999999	99999999	99999999	99999999	99999999	99999999	99999999	99999999	99999999
UPPER INCOME												
LESS THAN 10% MINORITY	99999999	99999999	99999999	99999999	99999999	99999999	99999999	99999999	99999999	99999999	99999999	99999999
10-19% MINORITY	99999999	99999999	99999999	99999999	99999999	99999999	99999999	99999999	99999999	99999999	99999999	99999999
20-49% MINORITY	99999999	99999999	99999999	99999999	99999999	99999999	99999999	99999999	99999999	99999999	99999999	99999999
50-79% MINORITY	99999999	99999999	99999999	99999999	99999999	99999999	99999999	99999999	99999999	99999999	99999999	99999999
80-100% MINORITY	99999999	99999999	99999999	99999999	99999999	99999999	99999999	99999999	99999999	99999999	99999999	99999999
SMALL COUNTY	99999999	99999999	99999999	99999999	99999999	99999999	99999999	99999999	99999999	99999999	99999999	99999999
ALL OTHER TRACTS 21/	99999999	99999999	99999999	99999999	99999999	99999999	99999999	99999999	99999999	99999999	99999999	99999999
TOTAL 14/	99999999	99999999	99999999	99999999	99999999	99999999	99999999	99999999	99999999	99999999	99999999	99999999

TABLE 7-2: DISPOSITION OF APPLICATIONS FOR CONVENTIONAL HOME-PURCHASE LOANS, 1- TO 4-FAMILY AND MANUFACTURED HOME DWELLINGS, BY CHARACTERISTICS OF CENSUS TRACT IN WHICH PROPERTY IS LOCATED, 2004

PAGE: 9999
RUN DATE: MM/DD/CCYY

INSTITUTION: XXXXXXXXXX-X XXXXXXXXXXXXXXXXXXXXXXXXXXXXX

MSA/MD: 99999 - XXXXXXXXXXXXXXXXXXXXXXXXXXXXXXXXXXXXXXXX

TYPE OF CENSUS TRACT 10/	APPLICATIONS RECEIVED 20/		LOANS ORIGINATED		APPS. APPROVED BUT NOT ACCEPTED		APPLICATIONS DENIED		APPLICATIONS WITHDRAWN		FILES CLOSED FOR INCOMPLETENESS	
	NUMBER	$000'S	NUMBER	$000'S	NUMBER	$000'S	NUMBER	$000'S	NUMBER	$000'S	NUMBER	$000'S
RACIAL/ETHNIC COMPOSITION 11/												
LESS THAN 10% MINORITY	99999999	99999999	99999999	99999999	99999999	99999999	99999999	99999999	99999999	99999999	99999999	99999999
10-19% MINORITY	99999999	99999999	99999999	99999999	99999999	99999999	99999999	99999999	99999999	99999999	99999999	99999999
20-49% MINORITY	99999999	99999999	99999999	99999999	99999999	99999999	99999999	99999999	99999999	99999999	99999999	99999999
50-79% MINORITY	99999999	99999999	99999999	99999999	99999999	99999999	99999999	99999999	99999999	99999999	99999999	99999999
80-100% MINORITY	99999999	99999999	99999999	99999999	99999999	99999999	99999999	99999999	99999999	99999999	99999999	99999999
INCOME CHARACTERISTICS 12/, 13/												
LOW INCOME	99999999	99999999	99999999	99999999	99999999	99999999	99999999	99999999	99999999	99999999	99999999	99999999
MODERATE INCOME	99999999	99999999	99999999	99999999	99999999	99999999	99999999	99999999	99999999	99999999	99999999	99999999
MIDDLE INCOME	99999999	99999999	99999999	99999999	99999999	99999999	99999999	99999999	99999999	99999999	99999999	99999999
UPPER INCOME	99999999	99999999	99999999	99999999	99999999	99999999	99999999	99999999	99999999	99999999	99999999	99999999
INCOME AND RACIAL/ETHNIC COMP 11/,12/ 13/												
LOW INCOME												
LESS THAN 10% MINORITY	99999999	99999999	99999999	99999999	99999999	99999999	99999999	99999999	99999999	99999999	99999999	99999999
10-19% MINORITY	99999999	99999999	99999999	99999999	99999999	99999999	99999999	99999999	99999999	99999999	99999999	99999999
20-49% MINORITY	99999999	99999999	99999999	99999999	99999999	99999999	99999999	99999999	99999999	99999999	99999999	99999999
50-79% MINORITY	99999999	99999999	99999999	99999999	99999999	99999999	99999999	99999999	99999999	99999999	99999999	99999999
80-100% MINORITY	99999999	99999999	99999999	99999999	99999999	99999999	99999999	99999999	99999999	99999999	99999999	99999999
MODERATED INCOME												
LESS THAN 10% MINORITY	99999999	99999999	99999999	99999999	99999999	99999999	99999999	99999999	99999999	99999999	99999999	99999999
10-19% MINORITY	99999999	99999999	99999999	99999999	99999999	99999999	99999999	99999999	99999999	99999999	99999999	99999999
20-49% MINORITY	99999999	99999999	99999999	99999999	99999999	99999999	99999999	99999999	99999999	99999999	99999999	99999999
50-79% MINORITY	99999999	99999999	99999999	99999999	99999999	99999999	99999999	99999999	99999999	99999999	99999999	99999999
80-100% MINORITY	99999999	99999999	99999999	99999999	99999999	99999999	99999999	99999999	99999999	99999999	99999999	99999999
MIDDLE INCOME												
LESS THAN 10% MINORITY	99999999	99999999	99999999	99999999	99999999	99999999	99999999	99999999	99999999	99999999	99999999	99999999
10-19% MINORITY	99999999	99999999	99999999	99999999	99999999	99999999	99999999	99999999	99999999	99999999	99999999	99999999
20-49% MINORITY	99999999	99999999	99999999	99999999	99999999	99999999	99999999	99999999	99999999	99999999	99999999	99999999
50-79% MINORITY	99999999	99999999	99999999	99999999	99999999	99999999	99999999	99999999	99999999	99999999	99999999	99999999
80-100% MINORITY	99999999	99999999	99999999	99999999	99999999	99999999	99999999	99999999	99999999	99999999	99999999	99999999
UPPER INCOME												
LESS THAN 10% MINORITY	99999999	99999999	99999999	99999999	99999999	99999999	99999999	99999999	99999999	99999999	99999999	99999999
10-19% MINORITY	99999999	99999999	99999999	99999999	99999999	99999999	99999999	99999999	99999999	99999999	99999999	99999999
20-49% MINORITY	99999999	99999999	99999999	99999999	99999999	99999999	99999999	99999999	99999999	99999999	99999999	99999999
50-79% MINORITY	99999999	99999999	99999999	99999999	99999999	99999999	99999999	99999999	99999999	99999999	99999999	99999999
80-100% MINORITY	99999999	99999999	99999999	99999999	99999999	99999999	99999999	99999999	99999999	99999999	99999999	99999999
SMALL COUNTY	99999999	99999999	99999999	99999999	99999999	99999999	99999999	99999999	99999999	99999999	99999999	99999999
ALL OTHER TRACTS 21/	99999999	99999999	99999999	99999999	99999999	99999999	99999999	99999999	99999999	99999999	99999999	99999999
TOTAL 14/	99999999	99999999	99999999	99999999	99999999	99999999	99999999	99999999	99999999	99999999	99999999	99999999

TABLE 7-3: DISPOSITION OF APPLICATIONS TO REFINANCE LOANS ON 1- TO 4-FAMILY AND MANUFACTURED HOME DWELLINGS, BY CHARACTERISTICS OF CENSUS TRACT IN WHICH PROPERTY IS LOCATED, 2004

PAGE: 9999
RUN DATE: MM/DD/CCYY

INSTITUTION: XXXXXXXXXX-X XXXXXXXXXXXXXXXXXXXXXXXXXXXXX

MSA/MD: 99999 - XXXXXXXXXXXXXXXXXXXXXXXXXXXXXXXXXXXXXXXX

TYPE OF CENSUS TRACT 10/	APPLICATIONS RECEIVED 20/		LOANS ORIGINATED		APPS. APPROVED BUT NOT ACCEPTED		APPLICATIONS DENIED		APPLICATIONS WITHDRAWN		FILES CLOSED FOR INCOMPLETENESS	
	NUMBER	$000'S	NUMBER	$000'S	NUMBER	$000'S	NUMBER	$000'S	NUMBER	$000'S	NUMBER	$000'S
RACIAL/ETHNIC COMPOSITION 11/												
LESS THAN 10% MINORITY	99999999	99999999	99999999	99999999	99999999	99999999	99999999	99999999	99999999	99999999	99999999	99999999
10-19% MINORITY	99999999	99999999	99999999	99999999	99999999	99999999	99999999	99999999	99999999	99999999	99999999	99999999
20-49% MINORITY	99999999	99999999	99999999	99999999	99999999	99999999	99999999	99999999	99999999	99999999	99999999	99999999
50-79% MINORITY	99999999	99999999	99999999	99999999	99999999	99999999	99999999	99999999	99999999	99999999	99999999	99999999
80-100% MINORITY	99999999	99999999	99999999	99999999	99999999	99999999	99999999	99999999	99999999	99999999	99999999	99999999
INCOME CHARACTERISTICS 12/, 13/												
LOW INCOME	99999999	99999999	99999999	99999999	99999999	99999999	99999999	99999999	99999999	99999999	99999999	99999999
MODERATE INCOME	99999999	99999999	99999999	99999999	99999999	99999999	99999999	99999999	99999999	99999999	99999999	99999999
MIDDLE INCOME	99999999	99999999	99999999	99999999	99999999	99999999	99999999	99999999	99999999	99999999	99999999	99999999
UPPER INCOME	99999999	99999999	99999999	99999999	99999999	99999999	99999999	99999999	99999999	99999999	99999999	99999999
INCOME AND RACIAL/ETHNIC COMP 11/,12/ 13/												
LOW INCOME												
LESS THAN 10% MINORITY	99999999	99999999	99999999	99999999	99999999	99999999	99999999	99999999	99999999	99999999	99999999	99999999
10-19% MINORITY	99999999	99999999	99999999	99999999	99999999	99999999	99999999	99999999	99999999	99999999	99999999	99999999
20-49% MINORITY	99999999	99999999	99999999	99999999	99999999	99999999	99999999	99999999	99999999	99999999	99999999	99999999
50-79% MINORITY	99999999	99999999	99999999	99999999	99999999	99999999	99999999	99999999	99999999	99999999	99999999	99999999
80-100% MINORITY	99999999	99999999	99999999	99999999	99999999	99999999	99999999	99999999	99999999	99999999	99999999	99999999
MODERATE INCOME												
LESS THAN 10% MINORITY	99999999	99999999	99999999	99999999	99999999	99999999	99999999	99999999	99999999	99999999	99999999	99999999
10-19% MINORITY	99999999	99999999	99999999	99999999	99999999	99999999	99999999	99999999	99999999	99999999	99999999	99999999
20-49% MINORITY	99999999	99999999	99999999	99999999	99999999	99999999	99999999	99999999	99999999	99999999	99999999	99999999
50-79% MINORITY	99999999	99999999	99999999	99999999	99999999	99999999	99999999	99999999	99999999	99999999	99999999	99999999
80-100% MINORITY	99999999	99999999	99999999	99999999	99999999	99999999	99999999	99999999	99999999	99999999	99999999	99999999
MIDDLE INCOME												
LESS THAN 10% MINORITY	99999999	99999999	99999999	99999999	99999999	99999999	99999999	99999999	99999999	99999999	99999999	99999999
10-19% MINORITY	99999999	99999999	99999999	99999999	99999999	99999999	99999999	99999999	99999999	99999999	99999999	99999999
20-49% MINORITY	99999999	99999999	99999999	99999999	99999999	99999999	99999999	99999999	99999999	99999999	99999999	99999999
50-79% MINORITY	99999999	99999999	99999999	99999999	99999999	99999999	99999999	99999999	99999999	99999999	99999999	99999999
80-100% MINORITY	99999999	99999999	99999999	99999999	99999999	99999999	99999999	99999999	99999999	99999999	99999999	99999999
UPPER INCOME												
LESS THAN 10% MINORITY	99999999	99999999	99999999	99999999	99999999	99999999	99999999	99999999	99999999	99999999	99999999	99999999
10-19% MINORITY	99999999	99999999	99999999	99999999	99999999	99999999	99999999	99999999	99999999	99999999	99999999	99999999
20-49% MINORITY	99999999	99999999	99999999	99999999	99999999	99999999	99999999	99999999	99999999	99999999	99999999	99999999
50-79% MINORITY	99999999	99999999	99999999	99999999	99999999	99999999	99999999	99999999	99999999	99999999	99999999	99999999
80-100% MINORITY	99999999	99999999	99999999	99999999	99999999	99999999	99999999	99999999	99999999	99999999	99999999	99999999
SMALL COUNTY	99999999	99999999	99999999	99999999	99999999	99999999	99999999	99999999	99999999	99999999	99999999	99999999
ALL OTHER TRACTS 21/	99999999	99999999	99999999	99999999	99999999	99999999	99999999	99999999	99999999	99999999	99999999	99999999
TOTAL 14/	99999999	99999999	99999999	99999999	99999999	99999999	99999999	99999999	99999999	99999999	99999999	99999999

TABLE 7-4: DISPOSITION OF APPLICATIONS FOR HOME IMPROVEMENT LOANS, 1- TO 4-FAMILY AND MANUFACTURED HOME DWELLINGS, BY CHARACTERISTICS OF CENSUS TRACT IN WHICH PROPERTY IS LOCATED, 2004

PAGE: 9999
RUN DATE: MM/DD/CCYY

INSTITUTION: XXXXXXXXXX-X XXXXXXXXXXXXXXXXXXXXXXXXXXXXXX

MSA/MD: 99999 - XXXXXXXXXXXXXXXXXXXXXXXXXXXXXXXXXXXXXXXXXX

TYPE OF CENSUS TRACT 10/	APPLICATIONS RECEIVED 20/		LOANS ORIGINATED		APPS. APPROVED BUT NOT ACCEPTED		APPLICATIONS DENIED		APPLICATIONS WITHDRAWN		FILES CLOSED FOR INCOMPLETENESS	
	NUMBER	$000'S	NUMBER	$000'S	NUMBER	$000'S	NUMBER	$000'S	NUMBER	$000'S	NUMBER	$000'S
RACIAL/ETHNIC COMPOSITION 11/												
LESS THAN 10% MINORITY	99999999	99999999	99999999	99999999	99999999	99999999	99999999	99999999	99999999	99999999	99999999	99999999
10-19% MINORITY	99999999	99999999	99999999	99999999	99999999	99999999	99999999	99999999	99999999	99999999	99999999	99999999
20-49% MINORITY	99999999	99999999	99999999	99999999	99999999	99999999	99999999	99999999	99999999	99999999	99999999	99999999
50-79% MINORITY	99999999	99999999	99999999	99999999	99999999	99999999	99999999	99999999	99999999	99999999	99999999	99999999
80-100% MINORITY	99999999	99999999	99999999	99999999	99999999	99999999	99999999	99999999	99999999	99999999	99999999	99999999
INCOME CHARACTERISTICS 12/, 13/												
LOW INCOME	99999999	99999999	99999999	99999999	99999999	99999999	99999999	99999999	99999999	99999999	99999999	99999999
MODERATE INCOME	99999999	99999999	99999999	99999999	99999999	99999999	99999999	99999999	99999999	99999999	99999999	99999999
MIDDLE INCOME	99999999	99999999	99999999	99999999	99999999	99999999	99999999	99999999	99999999	99999999	99999999	99999999
UPPER INCOME	99999999	99999999	99999999	99999999	99999999	99999999	99999999	99999999	99999999	99999999	99999999	99999999
INCOME AND RACIAL/ETHNIC COMP 11/,12/ 13/												
LOW INCOME												
LESS THAN 10% MINORITY	99999999	99999999	99999999	99999999	99999999	99999999	99999999	99999999	99999999	99999999	99999999	99999999
10-19% MINORITY	99999999	99999999	99999999	99999999	99999999	99999999	99999999	99999999	99999999	99999999	99999999	99999999
20-49% MINORITY	99999999	99999999	99999999	99999999	99999999	99999999	99999999	99999999	99999999	99999999	99999999	99999999
50-79% MINORITY	99999999	99999999	99999999	99999999	99999999	99999999	99999999	99999999	99999999	99999999	99999999	99999999
80-100% MINORITY	99999999	99999999	99999999	99999999	99999999	99999999	99999999	99999999	99999999	99999999	99999999	99999999
MODERATE INCOME												
LESS THAN 10% MINORITY	99999999	99999999	99999999	99999999	99999999	99999999	99999999	99999999	99999999	99999999	99999999	99999999
10-19% MINORITY	99999999	99999999	99999999	99999999	99999999	99999999	99999999	99999999	99999999	99999999	99999999	99999999
20-49% MINORITY	99999999	99999999	99999999	99999999	99999999	99999999	99999999	99999999	99999999	99999999	99999999	99999999
50-79% MINORITY	99999999	99999999	99999999	99999999	99999999	99999999	99999999	99999999	99999999	99999999	99999999	99999999
80-100% MINORITY	99999999	99999999	99999999	99999999	99999999	99999999	99999999	99999999	99999999	99999999	99999999	99999999
MIDDLE INCOME												
LESS THAN 10% MINORITY	99999999	99999999	99999999	99999999	99999999	99999999	99999999	99999999	99999999	99999999	99999999	99999999
10-19% MINORITY	99999999	99999999	99999999	99999999	99999999	99999999	99999999	99999999	99999999	99999999	99999999	99999999
20-49% MINORITY	99999999	99999999	99999999	99999999	99999999	99999999	99999999	99999999	99999999	99999999	99999999	99999999
50-79% MINORITY	99999999	99999999	99999999	99999999	99999999	99999999	99999999	99999999	99999999	99999999	99999999	99999999
80-100% MINORITY	99999999	99999999	99999999	99999999	99999999	99999999	99999999	99999999	99999999	99999999	99999999	99999999
UPPER INCOME												
LESS THAN 10% MINORITY	99999999	99999999	99999999	99999999	99999999	99999999	99999999	99999999	99999999	99999999	99999999	99999999
10-19% MINORITY	99999999	99999999	99999999	99999999	99999999	99999999	99999999	99999999	99999999	99999999	99999999	99999999
20-49% MINORITY	99999999	99999999	99999999	99999999	99999999	99999999	99999999	99999999	99999999	99999999	99999999	99999999
50-79% MINORITY	99999999	99999999	99999999	99999999	99999999	99999999	99999999	99999999	99999999	99999999	99999999	99999999
80-100% MINORITY	99999999	99999999	99999999	99999999	99999999	99999999	99999999	99999999	99999999	99999999	99999999	99999999
SMALL COUNTY	99999999	99999999	99999999	99999999	99999999	99999999	99999999	99999999	99999999	99999999	99999999	99999999
ALL OTHER TRACTS 21/	99999999	99999999	99999999	99999999	99999999	99999999	99999999	99999999	99999999	99999999	99999999	99999999
TOTAL 14/	99999999	99999999	99999999	99999999	99999999	99999999	99999999	99999999	99999999	99999999	99999999	99999999

TABLE 7-5: DISPOSITION OF APPLICATIONS FOR LOANS ON DWELLINGS FOR 5 OR MORE FAMILIES, BY CHARACTERISTICS OF CENSUS TRACT IN WHICH PROPERTY IS LOCATED, 2004

PAGE: 9999
RUN DATE: MM/DD/CCYY

INSTITUTION: XXXXXXXXXX-X XXXXXXXXXXXXXXXXXXXXXXXXXXXXXX

MSA/MD: 99999 - XXXXXXXXXXXXXXXXXXXXXXXXXXXXXXXXXXXXXXXXXX

TYPE OF CENSUS TRACT 10/	APPLICATIONS RECEIVED 20/		LOANS ORIGINATED		APPS. APPROVED BUT NOT ACCEPTED		APPLICATIONS DENIED		APPLICATIONS WITHDRAWN		FILES CLOSED FOR INCOMPLETENESS	
	NUMBER	$000'S	NUMBER	$000'S	NUMBER	$000'S	NUMBER	$000'S	NUMBER	$000'S	NUMBER	$000'S
RACIAL/ETHNIC COMPOSITION 11/												
LESS THAN 10% MINORITY	99999999	99999999	99999999	99999999	99999999	99999999	99999999	99999999	99999999	99999999	99999999	99999999
10-19% MINORITY	99999999	99999999	99999999	99999999	99999999	99999999	99999999	99999999	99999999	99999999	99999999	99999999
20-49% MINORITY	99999999	99999999	99999999	99999999	99999999	99999999	99999999	99999999	99999999	99999999	99999999	99999999
50-79% MINORITY	99999999	99999999	99999999	99999999	99999999	99999999	99999999	99999999	99999999	99999999	99999999	99999999
80-100% MINORITY	99999999	99999999	99999999	99999999	99999999	99999999	99999999	99999999	99999999	99999999	99999999	99999999
INCOME CHARACTERISTICS 12/, 13/												
LOW INCOME	99999999	99999999	99999999	99999999	99999999	99999999	99999999	99999999	99999999	99999999	99999999	99999999
MODERATE INCOME	99999999	99999999	99999999	99999999	99999999	99999999	99999999	99999999	99999999	99999999	99999999	99999999
MIDDLE INCOME	99999999	99999999	99999999	99999999	99999999	99999999	99999999	99999999	99999999	99999999	99999999	99999999
UPPER INCOME	99999999	99999999	99999999	99999999	99999999	99999999	99999999	99999999	99999999	99999999	99999999	99999999
INCOME AND RACIAL/ETHNIC COMP 11/,12/ 13/												
LOW INCOME												
LESS THAN 10% MINORITY	99999999	99999999	99999999	99999999	99999999	99999999	99999999	99999999	99999999	99999999	99999999	99999999
10-19% MINORITY	99999999	99999999	99999999	99999999	99999999	99999999	99999999	99999999	99999999	99999999	99999999	99999999
20-49% MINORITY	99999999	99999999	99999999	99999999	99999999	99999999	99999999	99999999	99999999	99999999	99999999	99999999
50-79% MINORITY	99999999	99999999	99999999	99999999	99999999	99999999	99999999	99999999	99999999	99999999	99999999	99999999
80-100% MINORITY	99999999	99999999	99999999	99999999	99999999	99999999	99999999	99999999	99999999	99999999	99999999	99999999
MODERATE INCOME												
LESS THAN 10% MINORITY	99999999	99999999	99999999	99999999	99999999	99999999	99999999	99999999	99999999	99999999	99999999	99999999
10-19% MINORITY	99999999	99999999	99999999	99999999	99999999	99999999	99999999	99999999	99999999	99999999	99999999	99999999
20-49% MINORITY	99999999	99999999	99999999	99999999	99999999	99999999	99999999	99999999	99999999	99999999	99999999	99999999
50-79% MINORITY	99999999	99999999	99999999	99999999	99999999	99999999	99999999	99999999	99999999	99999999	99999999	99999999
80-100% MINORITY	99999999	99999999	99999999	99999999	99999999	99999999	99999999	99999999	99999999	99999999	99999999	99999999
MIDDLE INCOME												
LESS THAN 10% MINORITY	99999999	99999999	99999999	99999999	99999999	99999999	99999999	99999999	99999999	99999999	99999999	99999999
10-19% MINORITY	99999999	99999999	99999999	99999999	99999999	99999999	99999999	99999999	99999999	99999999	99999999	99999999
20-49% MINORITY	99999999	99999999	99999999	99999999	99999999	99999999	99999999	99999999	99999999	99999999	99999999	99999999
50-79% MINORITY	99999999	99999999	99999999	99999999	99999999	99999999	99999999	99999999	99999999	99999999	99999999	99999999
80-100% MINORITY	99999999	99999999	99999999	99999999	99999999	99999999	99999999	99999999	99999999	99999999	99999999	99999999
UPPER INCOME												
LESS THAN 10% MINORITY	99999999	99999999	99999999	99999999	99999999	99999999	99999999	99999999	99999999	99999999	99999999	99999999
10-19% MINORITY	99999999	99999999	99999999	99999999	99999999	99999999	99999999	99999999	99999999	99999999	99999999	99999999
20-49% MINORITY	99999999	99999999	99999999	99999999	99999999	99999999	99999999	99999999	99999999	99999999	99999999	99999999
50-79% MINORITY	99999999	99999999	99999999	99999999	99999999	99999999	99999999	99999999	99999999	99999999	99999999	99999999
80-100% MINORITY	99999999	99999999	99999999	99999999	99999999	99999999	99999999	99999999	99999999	99999999	99999999	99999999
SMALL COUNTY	99999999	99999999	99999999	99999999	99999999	99999999	99999999	99999999	99999999	99999999	99999999	99999999
ALL OTHER TRACTS 21/	99999999	99999999	99999999	99999999	99999999	99999999	99999999	99999999	99999999	99999999	99999999	99999999
TOTAL 14/	99999999	99999999	99999999	99999999	99999999	99999999	99999999	99999999	99999999	99999999	99999999	99999999

TABLE 7-6: DISPOSITION OF APPLICATIONS FROM NONOCCUPANTS FOR HOME-PURCHASE, HOME IMPROVEMENT, OR REFINANCING LOANS, 1- TO 4-FAMILY AND MANUFACTURED HOME DWELLINGS, BY CHARACTERISTICS OF CENSUS TRACT IN WHICH PROPERTY IS LOCATED, 2004

PAGE: 9999
RUN DATE: MM/DD/CCYY

INSTITUTION: XXXXXXXXXX-X XXXXXXXXXXXXXXXXXXXXXXXXXXXXXX

MSA/MD: 99999 - XXXXXXXXXXXXXXXXXXXXXXXXXXXXXXXXXXXXXXXX

TYPE OF CENSUS TRACT 10/	APPLICATIONS RECEIVED 20/		LOANS ORIGINATED		APPS. APPROVED BUT NOT ACCEPTED		APPLICATIONS DENIED		APPLICATIONS WITHDRAWN		FILES CLOSED FOR INCOMPLETENESS	
	NUMBER	$000'S	NUMBER	$000'S	NUMBER	$000'S	NUMBER	$000'S	NUMBER	$000'S	NUMBER	$000'S
RACIAL/ETHNIC COMPOSITION 11/												
LESS THAN 10% MINORITY	99999999	99999999	99999999	99999999	99999999	99999999	99999999	99999999	99999999	99999999	99999999	99999999
10-19% MINORITY	99999999	99999999	99999999	99999999	99999999	99999999	99999999	99999999	99999999	99999999	99999999	99999999
20-49% MINORITY	99999999	99999999	99999999	99999999	99999999	99999999	99999999	99999999	99999999	99999999	99999999	99999999
50-79% MINORITY	99999999	99999999	99999999	99999999	99999999	99999999	99999999	99999999	99999999	99999999	99999999	99999999
80-100% MINORITY	99999999	99999999	99999999	99999999	99999999	99999999	99999999	99999999	99999999	99999999	99999999	99999999
INCOME CHARACTERISTICS 12/, 13/												
LOW INCOME	99999999	99999999	99999999	99999999	99999999	99999999	99999999	99999999	99999999	99999999	99999999	99999999
MODERATE INCOME	99999999	99999999	99999999	99999999	99999999	99999999	99999999	99999999	99999999	99999999	99999999	99999999
MIDDLE INCOME	99999999	99999999	99999999	99999999	99999999	99999999	99999999	99999999	99999999	99999999	99999999	99999999
UPPER INCOME	99999999	99999999	99999999	99999999	99999999	99999999	99999999	99999999	99999999	99999999	99999999	99999999
INCOME AND RACIAL/ETHNIC COMP 11/,12/ 13/												
LOW INCOME												
LESS THAN 10% MINORITY	99999999	99999999	99999999	99999999	99999999	99999999	99999999	99999999	99999999	99999999	99999999	99999999
10-19% MINORITY	99999999	99999999	99999999	99999999	99999999	99999999	99999999	99999999	99999999	99999999	99999999	99999999
20-49% MINORITY	99999999	99999999	99999999	99999999	99999999	99999999	99999999	99999999	99999999	99999999	99999999	99999999
50-79% MINORITY	99999999	99999999	99999999	99999999	99999999	99999999	99999999	99999999	99999999	99999999	99999999	99999999
80-100% MINORITY	99999999	99999999	99999999	99999999	99999999	99999999	99999999	99999999	99999999	99999999	99999999	99999999
MODERATE INCOME												
LESS THAN 10% MINORITY	99999999	99999999	99999999	99999999	99999999	99999999	99999999	99999999	99999999	99999999	99999999	99999999
10-19% MINORITY	99999999	99999999	99999999	99999999	99999999	99999999	99999999	99999999	99999999	99999999	99999999	99999999
20-49% MINORITY	99999999	99999999	99999999	99999999	99999999	99999999	99999999	99999999	99999999	99999999	99999999	99999999
50-79% MINORITY	99999999	99999999	99999999	99999999	99999999	99999999	99999999	99999999	99999999	99999999	99999999	99999999
80-100% MINORITY	99999999	99999999	99999999	99999999	99999999	99999999	99999999	99999999	99999999	99999999	99999999	99999999
MIDDLE INCOME												
LESS THAN 10% MINORITY	99999999	99999999	99999999	99999999	99999999	99999999	99999999	99999999	99999999	99999999	99999999	99999999
10-19% MINORITY	99999999	99999999	99999999	99999999	99999999	99999999	99999999	99999999	99999999	99999999	99999999	99999999
20-49% MINORITY	99999999	99999999	99999999	99999999	99999999	99999999	99999999	99999999	99999999	99999999	99999999	99999999
50-79% MINORITY	99999999	99999999	99999999	99999999	99999999	99999999	99999999	99999999	99999999	99999999	99999999	99999999
80-100% MINORITY	99999999	99999999	99999999	99999999	99999999	99999999	99999999	99999999	99999999	99999999	99999999	99999999
UPPER INCOME												
LESS THAN 10% MINORITY	99999999	99999999	99999999	99999999	99999999	99999999	99999999	99999999	99999999	99999999	99999999	99999999
10-19% MINORITY	99999999	99999999	99999999	99999999	99999999	99999999	99999999	99999999	99999999	99999999	99999999	99999999
20-49% MINORITY	99999999	99999999	99999999	99999999	99999999	99999999	99999999	99999999	99999999	99999999	99999999	99999999
50-79% MINORITY	99999999	99999999	99999999	99999999	99999999	99999999	99999999	99999999	99999999	99999999	99999999	99999999
80-100% MINORITY	99999999	99999999	99999999	99999999	99999999	99999999	99999999	99999999	99999999	99999999	99999999	99999999
SMALL COUNTY	99999999	99999999	99999999	99999999	99999999	99999999	99999999	99999999	99999999	99999999	99999999	99999999
ALL OTHER TRACTS 21/	99999999	99999999	99999999	99999999	99999999	99999999	99999999	99999999	99999999	99999999	99999999	99999999
TOTAL 14/	99999999	99999999	99999999	99999999	99999999	99999999	99999999	99999999	99999999	99999999	99999999	99999999

TABLE 7-7: DISPOSITION OF APPLICATIONS FOR HOME-PURCHASE, HOME IMPROVEMENT, OR REFINANCING LOANS, MANUFACTURED HOME DWELLINGS, BY CHARACTERISTICS OF CENSUS TRACT IN WHICH PROPERTY IS LOCATED, 2004

PAGE: 9999
RUN DATE: MM/DD/CCYY

INSTITUTION: XXXXXXXXXX-X XXXXXXXXXXXXXXXXXXXXXXXXXXXXXX

MSA/MD: 99999 - XXXXXXXXXXXXXXXXXXXXXXXXXXXXXXXXXXXXXXXXXX

TYPE OF CENSUS TRACT 10/	APPLICATIONS RECEIVED 20/		LOANS ORIGINATED		APPS. APPROVED BUT NOT ACCEPTED		APPLICATIONS DENIED		APPLICATIONS WITHDRAWN		FILES CLOSED FOR INCOMPLETENESS	
	NUMBER	$000'S	NUMBER	$000'S	NUMBER	$000'S	NUMBER	$000'S	NUMBER	$000'S	NUMBER	$000'S
RACIAL/ETHNIC COMPOSITION 11/												
LESS THAN 10% MINORITY	99999999	99999999	99999999	99999999	99999999	99999999	99999999	99999999	99999999	99999999	99999999	99999999
10-19% MINORITY	99999999	99999999	99999999	99999999	99999999	99999999	99999999	99999999	99999999	99999999	99999999	99999999
20-49% MINORITY	99999999	99999999	99999999	99999999	99999999	99999999	99999999	99999999	99999999	99999999	99999999	99999999
50-79% MINORITY	99999999	99999999	99999999	99999999	99999999	99999999	99999999	99999999	99999999	99999999	99999999	99999999
80-100% MINORITY	99999999	99999999	99999999	99999999	99999999	99999999	99999999	99999999	99999999	99999999	99999999	99999999
INCOME CHARACTERISTICS 12/, 13/												
LOW INCOME	99999999	99999999	99999999	99999999	99999999	99999999	99999999	99999999	99999999	99999999	99999999	99999999
MODERATE INCOME	99999999	99999999	99999999	99999999	99999999	99999999	99999999	99999999	99999999	99999999	99999999	99999999
MIDDLE INCOME	99999999	99999999	99999999	99999999	99999999	99999999	99999999	99999999	99999999	99999999	99999999	99999999
UPPER INCOME	99999999	99999999	99999999	99999999	99999999	99999999	99999999	99999999	99999999	99999999	99999999	99999999
INCOME AND RACIAL/ETHNIC COMP 11/,12/ 13/												
LOW INCOME												
LESS THAN 10% MINORITY	99999999	99999999	99999999	99999999	99999999	99999999	99999999	99999999	99999999	99999999	99999999	99999999
10-19% MINORITY	99999999	99999999	99999999	99999999	99999999	99999999	99999999	99999999	99999999	99999999	99999999	99999999
20-49% MINORITY	99999999	99999999	99999999	99999999	99999999	99999999	99999999	99999999	99999999	99999999	99999999	99999999
50-79% MINORITY	99999999	99999999	99999999	99999999	99999999	99999999	99999999	99999999	99999999	99999999	99999999	99999999
80-100% MINORITY	99999999	99999999	99999999	99999999	99999999	99999999	99999999	99999999	99999999	99999999	99999999	99999999
MODERATE INCOME												
LESS THAN 10% MINORITY	99999999	99999999	99999999	99999999	99999999	99999999	99999999	99999999	99999999	99999999	99999999	99999999
10-19% MINORITY	99999999	99999999	99999999	99999999	99999999	99999999	99999999	99999999	99999999	99999999	99999999	99999999
20-49% MINORITY	99999999	99999999	99999999	99999999	99999999	99999999	99999999	99999999	99999999	99999999	99999999	99999999
50-79% MINORITY	99999999	99999999	99999999	99999999	99999999	99999999	99999999	99999999	99999999	99999999	99999999	99999999
80-100% MINORITY	99999999	99999999	99999999	99999999	99999999	99999999	99999999	99999999	99999999	99999999	99999999	99999999
MIDDLE INCOME												
LESS THAN 10% MINORITY	99999999	99999999	99999999	99999999	99999999	99999999	99999999	99999999	99999999	99999999	99999999	99999999
10-19% MINORITY	99999999	99999999	99999999	99999999	99999999	99999999	99999999	99999999	99999999	99999999	99999999	99999999
20-49% MINORITY	99999999	99999999	99999999	99999999	99999999	99999999	99999999	99999999	99999999	99999999	99999999	99999999
50-79% MINORITY	99999999	99999999	99999999	99999999	99999999	99999999	99999999	99999999	99999999	99999999	99999999	99999999
80-100% MINORITY	99999999	99999999	99999999	99999999	99999999	99999999	99999999	99999999	99999999	99999999	99999999	99999999
UPPER INCOME												
LESS THAN 10% MINORITY	99999999	99999999	99999999	99999999	99999999	99999999	99999999	99999999	99999999	99999999	99999999	99999999
10-19% MINORITY	99999999	99999999	99999999	99999999	99999999	99999999	99999999	99999999	99999999	99999999	99999999	99999999
20-49% MINORITY	99999999	99999999	99999999	99999999	99999999	99999999	99999999	99999999	99999999	99999999	99999999	99999999
50-79% MINORITY	99999999	99999999	99999999	99999999	99999999	99999999	99999999	99999999	99999999	99999999	99999999	99999999
80-100% MINORITY	99999999	99999999	99999999	99999999	99999999	99999999	99999999	99999999	99999999	99999999	99999999	99999999
SMALL COUNTY	99999999	99999999	99999999	99999999	99999999	99999999	99999999	99999999	99999999	99999999	99999999	99999999
ALL OTHER TRACTS 21/	99999999	99999999	99999999	99999999	99999999	99999999	99999999	99999999	99999999	99999999	99999999	99999999
TOTAL 14/	99999999	99999999	99999999	99999999	99999999	99999999	99999999	99999999	99999999	99999999	99999999	99999999

TABLE 8-1: REASONS FOR DENIAL OF APPLICATIONS FOR FHA, FSA/RHS, AND VA HOME-PURCHASE LOANS, 1- TO 4-FAMILY AND MANUFACTURED HOME DWELLINGS, BY RACE, ETHNICITY, GENDER, AND INCOME OF APPLICANT, 2004

PAGE: 9999
RUN DATE: MM/DD/CCYY

INSTITUTION: XXXXXXXXXX-X XXXXXXXXXXXXXXXXXXXXXXXXXXXX

MSA/MD: 99999 - XXXXXXXXXXXXXXXXXXXXXXXXXXXXXXXXXXXXXXXX

APPLICANT CHARACTERISTICS	DEBT-TO-INCOME RATIO		EMPLOYMENT HISTORY		CREDIT HISTORY		COLLATERAL		INSUFFICIENT CASH		UNVERIFIABLE INFORMATION		CREDIT APPLICATION INCOMPLETE		MORTGAGE INSURANCE DENIED		OTHER		TOTAL 22/	
	NUMBER	%	NUMBER	%	NUMBER	%	NUMBER	%	NUMBER	%	NUMBER	%	NUMBER	%	NUMBER	%	NUMBER	%	NUMBER	%
RACE 5/																				
AMERICAN IND/ALASKA NATIVE	9999999	999	9999999	999	9999999	999	9999999	999	9999999	999	9999999	999	9999999	999	9999999	999	9999999	999	9999999	999
ASIAN	9999999	999	9999999	999	9999999	999	9999999	999	9999999	999	9999999	999	9999999	999	9999999	999	9999999	999	9999999	999
BLACK OR AFRICAN AMERICAN	9999999	999	9999999	999	9999999	999	9999999	999	9999999	999	9999999	999	9999999	999	9999999	999	9999999	999	9999999	999
NATIVE HAWAIIAN/PACIFIC ISL	9999999	999	9999999	999	9999999	999	9999999	999	9999999	999	9999999	999	9999999	999	9999999	999	9999999	999	9999999	999
WHITE	9999999	999	9999999	999	9999999	999	9999999	999	9999999	999	9999999	999	9999999	999	9999999	999	9999999	999	9999999	999
2 OR MORE MINORITY RACES	9999999	999	9999999	999	9999999	999	9999999	999	9999999	999	9999999	999	9999999	999	9999999	999	9999999	999	9999999	999
JOINT(WHITE/MINORITY RACE)	9999999	999	9999999	999	9999999	999	9999999	999	9999999	999	9999999	999	9999999	999	9999999	999	9999999	999	9999999	999
RACE NOT AVAILABLE 6/	9999999	999	9999999	999	9999999	999	9999999	999	9999999	999	9999999	999	9999999	999	9999999	999	9999999	999	9999999	999
ETHNICITY 7/																				
HISPANIC OR LATINO	9999999	999	9999999	999	9999999	999	9999999	999	9999999	999	9999999	999	9999999	999	9999999	999	9999999	999	9999999	999
NOT HISPANIC OR LATINO	9999999	999	9999999	999	9999999	999	9999999	999	9999999	999	9999999	999	9999999	999	9999999	999	9999999	999	9999999	999
JOINT(HISPANIC OR LATINO/ NOT HISPANIC OR LATINO)	9999999	999	9999999	999	9999999	999	9999999	999	9999999	999	9999999	999	9999999	999	9999999	999	9999999	999	9999999	999
ETHNICITY NOT AVAILABLE 6/	9999999	999	9999999	999	9999999	999	9999999	999	9999999	999	9999999	999	9999999	999	9999999	999	9999999	999	9999999	999
MINORITY STATUS 8/																				
WHITE NON-HISPANIC	9999999	999	9999999	999	9999999	999	9999999	999	9999999	999	9999999	999	9999999	999	9999999	999	9999999	999	9999999	999
OTHERS, INCL. HISPANIC	9999999	999	9999999	999	9999999	999	9999999	999	9999999	999	9999999	999	9999999	999	9999999	999	9999999	999	9999999	999
GENDER 19/																				
MALE	9999999	999	9999999	999	9999999	999	9999999	999	9999999	999	9999999	999	9999999	999	9999999	999	9999999	999	9999999	999
FEMALE	9999999	999	9999999	999	9999999	999	9999999	999	9999999	999	9999999	999	9999999	999	9999999	999	9999999	999	9999999	999
JOINT (MALE/FEMALE)	9999999	999	9999999	999	9999999	999	9999999	999	9999999	999	9999999	999	9999999	999	9999999	999	9999999	999	9999999	999
GENDER NOT AVAILABLE 6/	9999999	999	9999999	999	9999999	999	9999999	999	9999999	999	9999999	999	9999999	999	9999999	999	9999999	999	9999999	999
INCOME 9/																				
LESS THAN 50% OF MSA/MD MED	9999999	999	9999999	999	9999999	999	9999999	999	9999999	999	9999999	999	9999999	999	9999999	999	9999999	999	9999999	999
50-79% OF MSA/MD MEDIAN	9999999	999	9999999	999	9999999	999	9999999	999	9999999	999	9999999	999	9999999	999	9999999	999	9999999	999	9999999	999
80-99% OF MSA/MD MEDIAN	9999999	999	9999999	999	9999999	999	9999999	999	9999999	999	9999999	999	9999999	999	9999999	999	9999999	999	9999999	999
100-119% OF MSA/MD MEDIAN	9999999	999	9999999	999	9999999	999	9999999	999	9999999	999	9999999	999	9999999	999	9999999	999	9999999	999	9999999	999
120% OR MORE OF MSA/MD MED	9999999	999	9999999	999	9999999	999	9999999	999	9999999	999	9999999	999	9999999	999	9999999	999	9999999	999	9999999	999
INCOME NOT AVAILABLE 6/	9999999	999	9999999	999	9999999	999	9999999	999	9999999	999	9999999	999	9999999	999	9999999	999	9999999	999	9999999	999

TABLE 8-2: REASONS FOR DENIAL OF APPLICATIONS FOR CONVENTIONAL HOME-PURCHASE LOANS, 1- TO 4-FAMILY AND MANUFACTURED HOME DWELLINGS, BY RACE, ETHNICITY, GENDER, AND INCOME OF APPLICANT, 2004

PAGE: 9999
RUN DATE: MM/DD/CCYY

INSTITUTION: XXXXXXXXXX-X XXXXXXXXXXXXXXXXXXXXXXXXXXXXXX

MSA/MD: 99999 - XXXXXXXXXXXXXXXXXXXXXXXXXXXXXXXXXXXXXXXX

APPLICANT CHARACTERISTICS	DEBT-TO-INCOME RATIO		EMPLOYMENT HISTORY		CREDIT HISTORY		COLLATERAL		INSUFFICIENT CASH		UNVERIFIABLE INFORMATION		CREDIT APPLICATION INCOMPLETE		MORTGAGE INSURANCE DENIED		OTHER		TOTAL 22/	
	NUMBER	%	NUMBER	%	NUMBER	%	NUMBER	%	NUMBER	%	NUMBER	%	NUMBER	%	NUMBER	%	NUMBER	%	NUMBER	%
RACE 5/																				
AMERICAN IND/ALASKA NATIVE	9999999	999	9999999	999	9999999	999	9999999	999	9999999	999	9999999	999	9999999	999	9999999	999	9999999	999	9999999	999
ASIAN	9999999	999	9999999	999	9999999	999	9999999	999	9999999	999	9999999	999	9999999	999	9999999	999	9999999	999	9999999	999
BLACK OR AFRICAN AMERICAN	9999999	999	9999999	999	9999999	999	9999999	999	9999999	999	9999999	999	9999999	999	9999999	999	9999999	999	9999999	999
NATIVE HAWAIIAN/PACIFIC ISL	9999999	999	9999999	999	9999999	999	9999999	999	9999999	999	9999999	999	9999999	999	9999999	999	9999999	999	9999999	999
WHITE	9999999	999	9999999	999	9999999	999	9999999	999	9999999	999	9999999	999	9999999	999	9999999	999	9999999	999	9999999	999
2 OR MORE MINORITY RACES	9999999	999	9999999	999	9999999	999	9999999	999	9999999	999	9999999	999	9999999	999	9999999	999	9999999	999	9999999	999
JOINT(WHITE/MINORITY RACE)	9999999	999	9999999	999	9999999	999	9999999	999	9999999	999	9999999	999	9999999	999	9999999	999	9999999	999	9999999	999
RACE NOT AVAILABLE 6/	9999999	999	9999999	999	9999999	999	9999999	999	9999999	999	9999999	999	9999999	999	9999999	999	9999999	999	9999999	999
ETHNICITY 7/																				
HISPANIC OR LATINO	9999999	999	9999999	999	9999999	999	9999999	999	9999999	999	9999999	999	9999999	999	9999999	999	9999999	999	9999999	999
NOT HISPANIC OR LATINO	9999999	999	9999999	999	9999999	999	9999999	999	9999999	999	9999999	999	9999999	999	9999999	999	9999999	999	9999999	999
JOINT(HISPANIC OR LATINO/ NOT HISPANIC OR LATINO)	9999999	999	9999999	999	9999999	999	9999999	999	9999999	999	9999999	999	9999999	999	9999999	999	9999999	999	9999999	999
ETHNICITY NOT AVAILABLE 6/	9999999	999	9999999	999	9999999	999	9999999	999	9999999	999	9999999	999	9999999	999	9999999	999	9999999	999	9999999	999
MINORITY STATUS 8/																				
WHITE NON-HISPANIC	9999999	999	9999999	999	9999999	999	9999999	999	9999999	999	9999999	999	9999999	999	9999999	999	9999999	999	9999999	999
OTHERS, INCL. HISPANIC	9999999	999	9999999	999	9999999	999	9999999	999	9999999	999	9999999	999	9999999	999	9999999	999	9999999	999	9999999	999
GENDER 19/																				
MALE	9999999	999	9999999	999	9999999	999	9999999	999	9999999	999	9999999	999	9999999	999	9999999	999	9999999	999	9999999	999
FEMALE	9999999	999	9999999	999	9999999	999	9999999	999	9999999	999	9999999	999	9999999	999	9999999	999	9999999	999	9999999	999
JOINT (MALE/FEMALE)	9999999	999	9999999	999	9999999	999	9999999	999	9999999	999	9999999	999	9999999	999	9999999	999	9999999	999	9999999	999
GENDER NOT AVAILABLE 6/	9999999	999	9999999	999	9999999	999	9999999	999	9999999	999	9999999	999	9999999	999	9999999	999	9999999	999	9999999	999
INCOME 9/																				
LESS THAN 50% OF MSA/MD MED	9999999	999	9999999	999	9999999	999	9999999	999	9999999	999	9999999	999	9999999	999	9999999	999	9999999	999	9999999	999
50-79% OF MSA/MD MEDIAN	9999999	999	9999999	999	9999999	999	9999999	999	9999999	999	9999999	999	9999999	999	9999999	999	9999999	999	9999999	999
80-99% OF MSA/MD MEDIAN	9999999	999	9999999	999	9999999	999	9999999	999	9999999	999	9999999	999	9999999	999	9999999	999	9999999	999	9999999	999
100-119% OF MSA/MD MEDIAN	9999999	999	9999999	999	9999999	999	9999999	999	9999999	999	9999999	999	9999999	999	9999999	999	9999999	999	9999999	999
120% OR MORE OF MSA/MD MED	9999999	999	9999999	999	9999999	999	9999999	999	9999999	999	9999999	999	9999999	999	9999999	999	9999999	999	9999999	999
INCOME NOT AVAILABLE 6/	9999999	999	9999999	999	9999999	999	9999999	999	9999999	999	9999999	999	9999999	999	9999999	999	9999999	999	9999999	999

PAGE: 9999
RUN DATE: MM/DD/CCYY

TABLE 8-3: REASONS FOR DENIAL OF APPLICATIONS TO REFINANCE LOANS ON 1- TO 4-FAMILY AND MANUFACTURED HOME DWELLINGS, BY RACE, ETHNICITY, GENDER, AND INCOME OF APPLICANT, 2004

INSTITUTION: XXXXXXXXXX-X XXXXXXXXXXXXXXXXXXXXXXXXXXXXX

MSA/MD: 99999 - XXXXXXXXXXXXXXXXXXXXXXXXXXXXXXXXXXXXXXX

APPLICANT CHARACTERISTICS	DEBT-TO-INCOME RATIO		EMPLOYMENT HISTORY		CREDIT HISTORY		COLLATERAL		INSUFFICIENT CASH		UNVERIFIABLE INFORMATION		CREDIT APPLICATION INCOMPLETE		MORTGAGE INSURANCE DENIED		OTHER		TOTAL 22/	
	NUMBER	%	NUMBER	%	NUMBER	%	NUMBER	%	NUMBER	%	NUMBER	%	NUMBER	%	NUMBER	%	NUMBER	%	NUMBER	%
RACE 5/																				
AMERICAN IND/ALASKA NATIVE	9999999	999	9999999	999	9999999	999	9999999	999	9999999	999	9999999	999	9999999	999	9999999	999	9999999	999	9999999	999
ASIAN	9999999	999	9999999	999	9999999	999	9999999	999	9999999	999	9999999	999	9999999	999	9999999	999	9999999	999	9999999	999
BLACK OR AFRICAN AMERICAN	9999999	999	9999999	999	9999999	999	9999999	999	9999999	999	9999999	999	9999999	999	9999999	999	9999999	999	9999999	999
NATIVE HAWAIIAN/PACIFIC ISL	9999999	999	9999999	999	9999999	999	9999999	999	9999999	999	9999999	999	9999999	999	9999999	999	9999999	999	9999999	999
WHITE	9999999	999	9999999	999	9999999	999	9999999	999	9999999	999	9999999	999	9999999	999	9999999	999	9999999	999	9999999	999
2 OR MORE MINORITY RACES	9999999	999	9999999	999	9999999	999	9999999	999	9999999	999	9999999	999	9999999	999	9999999	999	9999999	999	9999999	999
JOINT(WHITE/MINORITY RACE)	9999999	999	9999999	999	9999999	999	9999999	999	9999999	999	9999999	999	9999999	999	9999999	999	9999999	999	9999999	999
RACE NOT AVAILABLE 6/	9999999	999	9999999	999	9999999	999	9999999	999	9999999	999	9999999	999	9999999	999	9999999	999	9999999	999	9999999	999
ETHNICITY 7/																				
HISPANIC OR LATINO	9999999	999	9999999	999	9999999	999	9999999	999	9999999	999	9999999	999	9999999	999	9999999	999	9999999	999	9999999	999
NOT HISPANIC OR LATINO	9999999	999	9999999	999	9999999	999	9999999	999	9999999	999	9999999	999	9999999	999	9999999	999	9999999	999	9999999	999
JOINT(HISPANIC OR LATINO/ NOT HISPANIC OR LATINO)	9999999	999	9999999	999	9999999	999	9999999	999	9999999	999	9999999	999	9999999	999	9999999	999	9999999	999	9999999	999
ETHNICITY NOT AVAILABLE 6/	9999999	999	9999999	999	9999999	999	9999999	999	9999999	999	9999999	999	9999999	999	9999999	999	9999999	999	9999999	999
MINORITY STATUS 8/																				
WHITE NON-HISPANIC	9999999	999	9999999	999	9999999	999	9999999	999	9999999	999	9999999	999	9999999	999	9999999	999	9999999	999	9999999	999
OTHERS, INCL. HISPANIC	9999999	999	9999999	999	9999999	999	9999999	999	9999999	999	9999999	999	9999999	999	9999999	999	9999999	999	9999999	999
GENDER 19/																				
MALE	9999999	999	9999999	999	9999999	999	9999999	999	9999999	999	9999999	999	9999999	999	9999999	999	9999999	999	9999999	999
FEMALE	9999999	999	9999999	999	9999999	999	9999999	999	9999999	999	9999999	999	9999999	999	9999999	999	9999999	999	9999999	999
JOINT (MALE/FEMALE)	9999999	999	9999999	999	9999999	999	9999999	999	9999999	999	9999999	999	9999999	999	9999999	999	9999999	999	9999999	999
GENDER NOT AVAILABLE 6/	9999999	999	9999999	999	9999999	999	9999999	999	9999999	999	9999999	999	9999999	999	9999999	999	9999999	999	9999999	999
INCOME 9/																				
LESS THAN 50% OF MSA/MD MED	9999999	999	9999999	999	9999999	999	9999999	999	9999999	999	9999999	999	9999999	999	9999999	999	9999999	999	9999999	999
50-79% OF MSA/MD MEDIAN	9999999	999	9999999	999	9999999	999	9999999	999	9999999	999	9999999	999	9999999	999	9999999	999	9999999	999	9999999	999
80-99% OF MSA/MD MEDIAN	9999999	999	9999999	999	9999999	999	9999999	999	9999999	999	9999999	999	9999999	999	9999999	999	9999999	999	9999999	999
100-119% OF MSA/MD MEDIAN	9999999	999	9999999	999	9999999	999	9999999	999	9999999	999	9999999	999	9999999	999	9999999	999	9999999	999	9999999	999
120% OR MORE OF MSA/MD MED	9999999	999	9999999	999	9999999	999	9999999	999	9999999	999	9999999	999	9999999	999	9999999	999	9999999	999	9999999	999
INCOME NOT AVAILABLE 6/	9999999	999	9999999	999	9999999	999	9999999	999	9999999	999	9999999	999	9999999	999	9999999	999	9999999	999	9999999	999

TABLE 8-4: REASONS FOR DENIAL OF APPLICATIONS FOR HOME IMPROVEMENT LOANS,
1- TO 4-FAMILY AND MANUFACTURED HOME DWELLINGS, BY RACE, ETHNICITY, GENDER, AND INCOME OF APPLICANT, 2004

PAGE: 9999
RUN DATE: MM/DD/CCYY

INSTITUTION: XXXXXXXXXX-X XXXXXXXXXXXXXXXXXXXXXXXXXXXXX

MSA/MD: 99999 - XXXXXXXXXXXXXXXXXXXXXXXXXXXXXXXXXXXXXXX

APPLICANT CHARACTERISTICS	DEBT-TO-INCOME RATIO		EMPLOYMENT HISTORY		CREDIT HISTORY		COLLATERAL		INSUFFICIENT CASH		UNVERIFIABLE INFORMATION		CREDIT APPLICATION INCOMPLETE		MORTGAGE INSURANCE DENIED		OTHER		TOTAL 22/	
	NUMBER	%	NUMBER	%	NUMBER	%	NUMBER	%	NUMBER	%	NUMBER	%	NUMBER	%	NUMBER	%	NUMBER	%	NUMBER	%
RACE 5/																				
AMERICAN IND/ALASKA NATIVE	9999999	999	9999999	999	9999999	999	9999999	999	9999999	999	9999999	999	9999999	999	9999999	999	9999999	999	9999999	999
ASIAN	9999999	999	9999999	999	9999999	999	9999999	999	9999999	999	9999999	999	9999999	999	9999999	999	9999999	999	9999999	999
BLACK OR AFRICAN AMERICAN	9999999	999	9999999	999	9999999	999	9999999	999	9999999	999	9999999	999	9999999	999	9999999	999	9999999	999	9999999	999
NATIVE HAWAIIAN/PACIFIC ISL	9999999	999	9999999	999	9999999	999	9999999	999	9999999	999	9999999	999	9999999	999	9999999	999	9999999	999	9999999	999
WHITE	9999999	999	9999999	999	9999999	999	9999999	999	9999999	999	9999999	999	9999999	999	9999999	999	9999999	999	9999999	999
2 OR MORE MINORITY RACES	9999999	999	9999999	999	9999999	999	9999999	999	9999999	999	9999999	999	9999999	999	9999999	999	9999999	999	9999999	999
JOINT(WHITE/MINORITY RACE)	9999999	999	9999999	999	9999999	999	9999999	999	9999999	999	9999999	999	9999999	999	9999999	999	9999999	999	9999999	999
RACE NOT AVAILABLE 6/	9999999	999	9999999	999	9999999	999	9999999	999	9999999	999	9999999	999	9999999	999	9999999	999	9999999	999	9999999	999
ETHNICITY 7/																				
HISPANIC OR LATINO	9999999	999	9999999	999	9999999	999	9999999	999	9999999	999	9999999	999	9999999	999	9999999	999	9999999	999	9999999	999
NOT HISPANIC OR LATINO	9999999	999	9999999	999	9999999	999	9999999	999	9999999	999	9999999	999	9999999	999	9999999	999	9999999	999	9999999	999
JOINT(HISPANIC OR LATINO/ NOT HISPANIC OR LATINO)	9999999	999	9999999	999	9999999	999	9999999	999	9999999	999	9999999	999	9999999	999	9999999	999	9999999	999	9999999	999
ETHNICITY NOT AVAILABLE 6/	9999999	999	9999999	999	9999999	999	9999999	999	9999999	999	9999999	999	9999999	999	9999999	999	9999999	999	9999999	999
MINORITY STATUS 8/																				
WHITE NON-HISPANIC	9999999	999	9999999	999	9999999	999	9999999	999	9999999	999	9999999	999	9999999	999	9999999	999	9999999	999	9999999	999
OTHERS, INCL. HISPANIC	9999999	999	9999999	999	9999999	999	9999999	999	9999999	999	9999999	999	9999999	999	9999999	999	9999999	999	9999999	999
GENDER 19/																				
MALE	9999999	999	9999999	999	9999999	999	9999999	999	9999999	999	9999999	999	9999999	999	9999999	999	9999999	999	9999999	999
FEMALE	9999999	999	9999999	999	9999999	999	9999999	999	9999999	999	9999999	999	9999999	999	9999999	999	9999999	999	9999999	999
JOINT (MALE/FEMALE)	9999999	999	9999999	999	9999999	999	9999999	999	9999999	999	9999999	999	9999999	999	9999999	999	9999999	999	9999999	999
GENDER NOT AVAILABLE 6/	9999999	999	9999999	999	9999999	999	9999999	999	9999999	999	9999999	999	9999999	999	9999999	999	9999999	999	9999999	999
INCOME 9/																				
LESS THAN 50% OF MSA/MD MED	9999999	999	9999999	999	9999999	999	9999999	999	9999999	999	9999999	999	9999999	999	9999999	999	9999999	999	9999999	999
50-79% OF MSA/MD MEDIAN	9999999	999	9999999	999	9999999	999	9999999	999	9999999	999	9999999	999	9999999	999	9999999	999	9999999	999	9999999	999
80-99% OF MSA/MD MEDIAN	9999999	999	9999999	999	9999999	999	9999999	999	9999999	999	9999999	999	9999999	999	9999999	999	9999999	999	9999999	999
100-119% OF MSA/MD MEDIAN	9999999	999	9999999	999	9999999	999	9999999	999	9999999	999	9999999	999	9999999	999	9999999	999	9999999	999	9999999	999
120% OR MORE OF MSA/MD MED	9999999	999	9999999	999	9999999	999	9999999	999	9999999	999	9999999	999	9999999	999	9999999	999	9999999	999	9999999	999
INCOME NOT AVAILABLE 6/	9999999	999	9999999	999	9999999	999	9999999	999	9999999	999	9999999	999	9999999	999	9999999	999	9999999	999	9999999	999

TABLE 8-5: REASONS FOR DENIAL OF APPLICATIONS FOR LOANS ON DWELLINGS FOR 5 OR MORE FAMILIES, BY RACE, ETHNICITY, GENDER, AND INCOME OF APPLICANT, 2004

PAGE: 9999
RUN DATE: MM/DD/CCYY

INSTITUTION: XXXXXXXXXX-X XXXXXXXXXXXXXXXXXXXXXXXXXXXXX

MSA/MD: 99999 - XXXXXXXXXXXXXXXXXXXXXXXXXXXXXXXXXXXXXXX

APPLICANT CHARACTERISTICS	DEBT-TO-INCOME RATIO		EMPLOYMENT HISTORY		CREDIT HISTORY		COLLATERAL		INSUFFICIENT CASH		UNVERIFIABLE INFORMATION		CREDIT APPLICATION INCOMPLETE		MORTGAGE INSURANCE DENIED		OTHER		TOTAL 22/	
	NUMBER	%	NUMBER	%	NUMBER	%	NUMBER	%	NUMBER	%	NUMBER	%	NUMBER	%	NUMBER	%	NUMBER	%	NUMBER	%
RACE 5/																				
AMERICAN IND/ALASKA NATIVE	9999999	999	9999999	999	9999999	999	9999999	999	9999999	999	9999999	999	9999999	999	9999999	999	9999999	999	9999999	999
ASIAN	9999999	999	9999999	999	9999999	999	9999999	999	9999999	999	9999999	999	9999999	999	9999999	999	9999999	999	9999999	999
BLACK OR AFRICAN AMERICAN	9999999	999	9999999	999	9999999	999	9999999	999	9999999	999	9999999	999	9999999	999	9999999	999	9999999	999	9999999	999
NATIVE HAWAIIAN/PACIFIC ISL	9999999	999	9999999	999	9999999	999	9999999	999	9999999	999	9999999	999	9999999	999	9999999	999	9999999	999	9999999	999
WHITE	9999999	999	9999999	999	9999999	999	9999999	999	9999999	999	9999999	999	9999999	999	9999999	999	9999999	999	9999999	999
2 OR MORE MINORITY RACES	9999999	999	9999999	999	9999999	999	9999999	999	9999999	999	9999999	999	9999999	999	9999999	999	9999999	999	9999999	999
JOINT(WHITE/MINORITY RACE)	9999999	999	9999999	999	9999999	999	9999999	999	9999999	999	9999999	999	9999999	999	9999999	999	9999999	999	9999999	999
RACE NOT AVAILABLE 6/	9999999	999	9999999	999	9999999	999	9999999	999	9999999	999	9999999	999	9999999	999	9999999	999	9999999	999	9999999	999
ETHNICITY 7/																				
HISPANIC OR LATINO	9999999	999	9999999	999	9999999	999	9999999	999	9999999	999	9999999	999	9999999	999	9999999	999	9999999	999	9999999	999
NOT HISPANIC OR LATINO	9999999	999	9999999	999	9999999	999	9999999	999	9999999	999	9999999	999	9999999	999	9999999	999	9999999	999	9999999	999
JOINT(HISPANIC OR LATINO/ NOT HISPANIC OR LATINO)	9999999	999	9999999	999	9999999	999	9999999	999	9999999	999	9999999	999	9999999	999	9999999	999	9999999	999	9999999	999
ETHNICITY NOT AVAILABLE 6/	9999999	999	9999999	999	9999999	999	9999999	999	9999999	999	9999999	999	9999999	999	9999999	999	9999999	999	9999999	999
MINORITY STATUS 8/																				
WHITE NON-HISPANIC	9999999	999	9999999	999	9999999	999	9999999	999	9999999	999	9999999	999	9999999	999	9999999	999	9999999	999	9999999	999
OTHERS, INCL. HISPANIC	9999999	999	9999999	999	9999999	999	9999999	999	9999999	999	9999999	999	9999999	999	9999999	999	9999999	999	9999999	999
GENDER 19/																				
MALE	9999999	999	9999999	999	9999999	999	9999999	999	9999999	999	9999999	999	9999999	999	9999999	999	9999999	999	9999999	999
FEMALE	9999999	999	9999999	999	9999999	999	9999999	999	9999999	999	9999999	999	9999999	999	9999999	999	9999999	999	9999999	999
JOINT (MALE/FEMALE)	9999999	999	9999999	999	9999999	999	9999999	999	9999999	999	9999999	999	9999999	999	9999999	999	9999999	999	9999999	999
GENDER NOT AVAILABLE 6/	9999999	999	9999999	999	9999999	999	9999999	999	9999999	999	9999999	999	9999999	999	9999999	999	9999999	999	9999999	999
INCOME 9/																				
LESS THAN 50% OF MSA/MD MED	9999999	999	9999999	999	9999999	999	9999999	999	9999999	999	9999999	999	9999999	999	9999999	999	9999999	999	9999999	999
50-79% OF MSA/MD MEDIAN	9999999	999	9999999	999	9999999	999	9999999	999	9999999	999	9999999	999	9999999	999	9999999	999	9999999	999	9999999	999
80-99% OF MSA/MD MEDIAN	9999999	999	9999999	999	9999999	999	9999999	999	9999999	999	9999999	999	9999999	999	9999999	999	9999999	999	9999999	999
100-119% OF MSA/MD MEDIAN	9999999	999	9999999	999	9999999	999	9999999	999	9999999	999	9999999	999	9999999	999	9999999	999	9999999	999	9999999	999
120% OR MORE OF MSA/MD MED	9999999	999	9999999	999	9999999	999	9999999	999	9999999	999	9999999	999	9999999	999	9999999	999	9999999	999	9999999	999
INCOME NOT AVAILABLE 6/	9999999	999	9999999	999	9999999	999	9999999	999	9999999	999	9999999	999	9999999	999	9999999	999	9999999	999	9999999	999

TABLE 8-6: REASONS FOR DENIAL OF APPLICATIONS FROM NONOCCUPANTS FOR HOME-PURCHASE, HOME IMPROVEMENT, OR REFINANCING LOANS, 1- TO 4-FAMILY AND MANUFACTURED HOME DWELLINGS, BY RACE, ETHNICITY, GENDER, AND INCOME OF APPLICANT, 2004

PAGE: 9999
RUN DATE: MM/DD/CCYY

STITUTION: XXXXXXXXXX-X XXXXXXXXXXXXXXXXXXXXXXXXXXXX

MSA/MD: 99999 - XXXXXXXXXXXXXXXXXXXXXXXXXXXXXXXXXXXXXXX

APPLICANT CHARACTERISTICS	DEBT-TO-INCOME RATIO		EMPLOYMENT HISTORY		CREDIT HISTORY		COLLATERAL		INSUFFICIENT CASH		UNVERIFIABLE INFORMATION		CREDIT APPLICATION INCOMPLETE		MORTGAGE INSURANCE DENIED		OTHER		TOTAL 22/	
	NUMBER	%	NUMBER	%	NUMBER	%	NUMBER	%	NUMBER	%	NUMBER	%	NUMBER	%	NUMBER	%	NUMBER	%	NUMBER	%
RACE 5/																				
AMERICAN IND/ALASKA NATIVE	9999999	999	9999999	999	9999999	999	9999999	999	9999999	999	9999999	999	9999999	999	9999999	999	9999999	999	9999999	999
ASIAN	9999999	999	9999999	999	9999999	999	9999999	999	9999999	999	9999999	999	9999999	999	9999999	999	9999999	999	9999999	999
BLACK OR AFRICAN AMERICAN	9999999	999	9999999	999	9999999	999	9999999	999	9999999	999	9999999	999	9999999	999	9999999	999	9999999	999	9999999	999
NATIVE HAWAIIAN/PACIFIC ISL	9999999	999	9999999	999	9999999	999	9999999	999	9999999	999	9999999	999	9999999	999	9999999	999	9999999	999	9999999	999
WHITE	9999999	999	9999999	999	9999999	999	9999999	999	9999999	999	9999999	999	9999999	999	9999999	999	9999999	999	9999999	999
2 OR MORE MINORITY RACES	9999999	999	9999999	999	9999999	999	9999999	999	9999999	999	9999999	999	9999999	999	9999999	999	9999999	999	9999999	999
JOINT (WHITE/MINORITY RACE)	9999999	999	9999999	999	9999999	999	9999999	999	9999999	999	9999999	999	9999999	999	9999999	999	9999999	999	9999999	999
RACE NOT AVAILABLE 6/	9999999	999	9999999	999	9999999	999	9999999	999	9999999	999	9999999	999	9999999	999	9999999	999	9999999	999	9999999	999
ETHNICITY 7/																				
HISPANIC OR LATINO	9999999	999	9999999	999	9999999	999	9999999	999	9999999	999	9999999	999	9999999	999	9999999	999	9999999	999	9999999	999
NOT HISPANIC OR LATINO	9999999	999	9999999	999	9999999	999	9999999	999	9999999	999	9999999	999	9999999	999	9999999	999	9999999	999	9999999	999
JOINT (HISPANIC OR LATINO/ NOT HISPANIC OR LATINO)	9999999	999	9999999	999	9999999	999	9999999	999	9999999	999	9999999	999	9999999	999	9999999	999	9999999	999	9999999	999
ETHNICITY NOT AVAILABLE 6/	9999999	999	9999999	999	9999999	999	9999999	999	9999999	999	9999999	999	9999999	999	9999999	999	9999999	999	9999999	999
MINORITY STATUS 8/																				
WHITE NON-HISPANIC	9999999	999	9999999	999	9999999	999	9999999	999	9999999	999	9999999	999	9999999	999	9999999	999	9999999	999	9999999	999
OTHERS, INCL. HISPANIC	9999999	999	9999999	999	9999999	999	9999999	999	9999999	999	9999999	999	9999999	999	9999999	999	9999999	999	9999999	999
GENDER 19/																				
MALE	9999999	999	9999999	999	9999999	999	9999999	999	9999999	999	9999999	999	9999999	999	9999999	999	9999999	999	9999999	999
FEMALE	9999999	999	9999999	999	9999999	999	9999999	999	9999999	999	9999999	999	9999999	999	9999999	999	9999999	999	9999999	999
JOINT (MALE/FEMALE)	9999999	999	9999999	999	9999999	999	9999999	999	9999999	999	9999999	999	9999999	999	9999999	999	9999999	999	9999999	999
GENDER NOT AVAILABLE 6/	9999999	999	9999999	999	9999999	999	9999999	999	9999999	999	9999999	999	9999999	999	9999999	999	9999999	999	9999999	999
INCOME 9/																				
LESS THAN 50% OF MSA/MD MED	9999999	999	9999999	999	9999999	999	9999999	999	9999999	999	9999999	999	9999999	999	9999999	999	9999999	999	9999999	999
50-79% OF MSA/MD MEDIAN	9999999	999	9999999	999	9999999	999	9999999	999	9999999	999	9999999	999	9999999	999	9999999	999	9999999	999	9999999	999
80-99% OF MSA/MD MEDIAN	9999999	999	9999999	999	9999999	999	9999999	999	9999999	999	9999999	999	9999999	999	9999999	999	9999999	999	9999999	999
100-119% OF MSA/MD MEDIAN	9999999	999	9999999	999	9999999	999	9999999	999	9999999	999	9999999	999	9999999	999	9999999	999	9999999	999	9999999	999
120% OR MORE OF MSA/MD MED	9999999	999	9999999	999	9999999	999	9999999	999	9999999	999	9999999	999	9999999	999	9999999	999	9999999	999	9999999	999
INCOME NOT AVAILABLE 6/	9999999	999	9999999	999	9999999	999	9999999	999	9999999	999	9999999	999	9999999	999	9999999	999	9999999	999	9999999	999

TABLE 8-7: REASONS FOR DENIAL OF APPLICATIONS FOR HOME-PURCHASE, HOME IMPROVEMENT, OR REFINANCING LOANS, MANUFACTURED HOME DWELLINGS, BY RACE, ETHNICITY, GENDER, AND INCOME OF APPLICANT, 2004

PAGE: 9999
RUN DATE: MM/DD/CCYY

INSTITUTION: XXXXXXXXXX-X XXXXXXXXXXXXXXXXXXXXXXXXXXXX

MSA/MD: 99999 - XXXXXXXXXXXXXXXXXXXXXXXXXXXXXXXXXXXXXXX

APPLICANT CHARACTERISTICS	DEBT-TO-INCOME RATIO		EMPLOYMENT HISTORY		CREDIT HISTORY		COLLATERAL		INSUFFICIENT CASH		UNVERIFIABLE INFORMATION		CREDIT APPLICATION INCOMPLETE		MORTGAGE INSURANCE DENIED		OTHER		TOTAL 22/	
	NUMBER	%	NUMBER	%	NUMBER	%	NUMBER	%	NUMBER	%	NUMBER	%	NUMBER	%	NUMBER	%	NUMBER	%	NUMBER	%
RACE 5/																				
AMERICAN IND/ALASKA NATIVE	9999999	999	9999999	999	9999999	999	9999999	999	9999999	999	9999999	999	9999999	999	9999999	999	9999999	999	9999999	999
ASIAN	9999999	999	9999999	999	9999999	999	9999999	999	9999999	999	9999999	999	9999999	999	9999999	999	9999999	999	9999999	999
BLACK OR AFRICAN AMERICAN	9999999	999	9999999	999	9999999	999	9999999	999	9999999	999	9999999	999	9999999	999	9999999	999	9999999	999	9999999	999
NATIVE HAWAIIAN/PACIFIC ISL	9999999	999	9999999	999	9999999	999	9999999	999	9999999	999	9999999	999	9999999	999	9999999	999	9999999	999	9999999	999
WHITE	9999999	999	9999999	999	9999999	999	9999999	999	9999999	999	9999999	999	9999999	999	9999999	999	9999999	999	9999999	999
2 OR MORE MINORITY RACES	9999999	999	9999999	999	9999999	999	9999999	999	9999999	999	9999999	999	9999999	999	9999999	999	9999999	999	9999999	999
JOINT(WHITE/MINORITY RACE)	9999999	999	9999999	999	9999999	999	9999999	999	9999999	999	9999999	999	9999999	999	9999999	999	9999999	999	9999999	999
RACE NOT AVAILABLE 6/	9999999	999	9999999	999	9999999	999	9999999	999	9999999	999	9999999	999	9999999	999	9999999	999	9999999	999	9999999	999
ETHNICITY 7/																				
HISPANIC OR LATINO	9999999	999	9999999	999	9999999	999	9999999	999	9999999	999	9999999	999	9999999	999	9999999	999	9999999	999	9999999	999
NOT HISPANIC OR LATINO	9999999	999	9999999	999	9999999	999	9999999	999	9999999	999	9999999	999	9999999	999	9999999	999	9999999	999	9999999	999
JOINT(HISPANIC OR LATINO/ NOT HISPANIC OR LATINO)	9999999	999	9999999	999	9999999	999	9999999	999	9999999	999	9999999	999	9999999	999	9999999	999	9999999	999	9999999	999
ETHNICITY NOT AVAILABLE 6/	9999999	999	9999999	999	9999999	999	9999999	999	9999999	999	9999999	999	9999999	999	9999999	999	9999999	999	9999999	999
MINORITY STATUS 8/																				
WHITE NON-HISPANIC	9999999	999	9999999	999	9999999	999	9999999	999	9999999	999	9999999	999	9999999	999	9999999	999	9999999	999	9999999	999
OTHERS, INCL. HISPANIC	9999999	999	9999999	999	9999999	999	9999999	999	9999999	999	9999999	999	9999999	999	9999999	999	9999999	999	9999999	999
GENDER 19/																				
MALE	9999999	999	9999999	999	9999999	999	9999999	999	9999999	999	9999999	999	9999999	999	9999999	999	9999999	999	9999999	999
FEMALE	9999999	999	9999999	999	9999999	999	9999999	999	9999999	999	9999999	999	9999999	999	9999999	999	9999999	999	9999999	999
JOINT (MALE/FEMALE)	9999999	999	9999999	999	9999999	999	9999999	999	9999999	999	9999999	999	9999999	999	9999999	999	9999999	999	9999999	999
GENDER NOT AVAILABLE 6/	9999999	999	9999999	999	9999999	999	9999999	999	9999999	999	9999999	999	9999999	999	9999999	999	9999999	999	9999999	999
INCOME 9/																				
LESS THAN 50% OF MSA/MD MED	9999999	999	9999999	999	9999999	999	9999999	999	9999999	999	9999999	999	9999999	999	9999999	999	9999999	999	9999999	999
50-79% OF MSA/MD MEDIAN	9999999	999	9999999	999	9999999	999	9999999	999	9999999	999	9999999	999	9999999	999	9999999	999	9999999	999	9999999	999
80-99% OF MSA/MD MEDIAN	9999999	999	9999999	999	9999999	999	9999999	999	9999999	999	9999999	999	9999999	999	9999999	999	9999999	999	9999999	999
100-119% OF MSA/MD MEDIAN	9999999	999	9999999	999	9999999	999	9999999	999	9999999	999	9999999	999	9999999	999	9999999	999	9999999	999	9999999	999
120% OR MORE OF MSA/MD MED	9999999	999	9999999	999	9999999	999	9999999	999	9999999	999	9999999	999	9999999	999	9999999	999	9999999	999	9999999	999
INCOME NOT AVAILABLE 6/	9999999	999	9999999	999	9999999	999	9999999	999	9999999	999	9999999	999	9999999	999	9999999	999	9999999	999	9999999	999

AGGREGATE TABLE 9: DISPOSITION OF LOAN APPLICATIONS, BY MEDIAN AGE OF HOMES IN CENSUS TRACT IN WHICH PROPERTY IS LOCATED AND TYPE OF LOAN, 2004

PAGE: 9999
RUN DATE: MM/DD/CCYY

MSA/MD: 9999 - XXXXXXXXXXXXXXXXXXXXXXXXXXXXXXXXXXXXXXXX

CENSUS TRACTS BY MEDIAN AGE OF HOMES 23/	LOANS ON 1-TO-4 FAMILY AND MANUFACTURED HOME DWELLINGS								LOANS ON DWELLINGS FOR 5 OR MORE FAMILIES		NONOCCUPANT LOANS FROM COLUMNS A, B, C AND D		LOANS ON MANUFACTURED HOME DWELLINGS FROM COLUMNS A,B,C AND D	
	HOME PURCHASE LOANS				REFINANCINGS		HOME IMPROVEMENT LOANS							
	FHA, FSA/RHS & VA		CONVENTIONAL											
	A		B		C		D		E		F		G	
	NUMBER	($000'S)	NUMBER	($000'S)	NUMBER	($000'S)	NUMBER	($000'S)	NUMBER	($000'S)	NUMBER	($000'S)	NUMBER	($000'S)
1990-MARCH 2000														
LOANS ORIGINATED	99999999	99999999	99999999	99999999	99999999	99999999	99999999	99999999	99999999	99999999	99999999	99999999	99999999	99999999
APPLICAT'N APPROVED, NOT ACCEPTED	99999999	99999999	99999999	99999999	99999999	99999999	99999999	99999999	99999999	99999999	99999999	99999999	99999999	99999999
APPLICATIONS DENIED	99999999	99999999	99999999	99999999	99999999	99999999	99999999	99999999	99999999	99999999	99999999	99999999	99999999	99999999
APPLICATIONS WITHDRAWN	99999999	99999999	99999999	99999999	99999999	99999999	99999999	99999999	99999999	99999999	99999999	99999999	99999999	99999999
FILES CLOSED FOR INCOMPLETENESS	99999999	99999999	99999999	99999999	99999999	99999999	99999999	99999999	99999999	99999999	99999999	99999999	99999999	99999999
1980-1989														
LOANS ORIGINATED	99999999	99999999	99999999	99999999	99999999	99999999	99999999	99999999	99999999	99999999	99999999	99999999	99999999	99999999
APPLICAT'N APPROVED, NOT ACCEPTED	99999999	99999999	99999999	99999999	99999999	99999999	99999999	99999999	99999999	99999999	99999999	99999999	99999999	99999999
APPLICATIONS DENIED	99999999	99999999	99999999	99999999	99999999	99999999	99999999	99999999	99999999	99999999	99999999	99999999	99999999	99999999
APPLICATIONS WITHDRAWN	99999999	99999999	99999999	99999999	99999999	99999999	99999999	99999999	99999999	99999999	99999999	99999999	99999999	99999999
FILES CLOSED FOR INCOMPLETENESS	99999999	99999999	99999999	99999999	99999999	99999999	99999999	99999999	99999999	99999999	99999999	99999999	99999999	99999999
1970-1979														
LOANS ORIGINATED	99999999	99999999	99999999	99999999	99999999	99999999	99999999	99999999	99999999	99999999	99999999	99999999	99999999	99999999
APPLICAT'N APPROVED, NOT ACCEPTED	99999999	99999999	99999999	99999999	99999999	99999999	99999999	99999999	99999999	99999999	99999999	99999999	99999999	99999999
APPLICATIONS DENIED	99999999	99999999	99999999	99999999	99999999	99999999	99999999	99999999	99999999	99999999	99999999	99999999	99999999	99999999
APPLICATIONS WITHDRAWN	99999999	99999999	99999999	99999999	99999999	99999999	99999999	99999999	99999999	99999999	99999999	99999999	99999999	99999999
FILES CLOSED FOR INCOMPLETENESS	99999999	99999999	99999999	99999999	99999999	99999999	99999999	99999999	99999999	99999999	99999999	99999999	99999999	99999999
1960-1969														
LOANS ORIGINATED	99999999	99999999	99999999	99999999	99999999	99999999	99999999	99999999	99999999	99999999	99999999	99999999	99999999	99999999
APPLICAT'N APPROVED, NOT ACCEPTED	99999999	99999999	99999999	99999999	99999999	99999999	99999999	99999999	99999999	99999999	99999999	99999999	99999999	99999999
APPLICATIONS DENIED	99999999	99999999	99999999	99999999	99999999	99999999	99999999	99999999	99999999	99999999	99999999	99999999	99999999	99999999
APPLICATIONS WITHDRAWN	99999999	99999999	99999999	99999999	99999999	99999999	99999999	99999999	99999999	99999999	99999999	99999999	99999999	99999999
FILES CLOSED FOR INCOMPLETENESS	99999999	99999999	99999999	99999999	99999999	99999999	99999999	99999999	99999999	99999999	99999999	99999999	99999999	99999999
1959 OR EARLIER														
LOANS ORIGINATED	99999999	99999999	99999999	99999999	99999999	99999999	99999999	99999999	99999999	99999999	99999999	99999999	99999999	99999999
APPLICAT'N APPROVED, NOT ACCEPTED	99999999	99999999	99999999	99999999	99999999	99999999	99999999	99999999	99999999	99999999	99999999	99999999	99999999	99999999
APPLICATIONS DENIED	99999999	99999999	99999999	99999999	99999999	99999999	99999999	99999999	99999999	99999999	99999999	99999999	99999999	99999999
APPLICATIONS WITHDRAWN	99999999	99999999	99999999	99999999	99999999	99999999	99999999	99999999	99999999	99999999	99999999	99999999	99999999	99999999
FILES CLOSED FOR INCOMPLETENESS	99999999	99999999	99999999	99999999	99999999	99999999	99999999	99999999	99999999	99999999	99999999	99999999	99999999	99999999

AGGREGATE TABLE 10: DISPOSITION OF LOAN APPLICATIONS, BY PRINCIPAL CITY VERSUS NON-PRINCIPAL CITY PROPERTY LOCATION AND TYPE OF LOAN, 2004

PAGE: 9999
RUN DATE: MM/DD/CCYY

MSA/MD: 9999 - XXXXXXXXXXXXXXXXXXXXXXXXXXXXXXXXXXXXXXXX

LOCATION CATEGORY	LOANS ON 1-TO-4 FAMILY AND MANUFACTURED HOME DWELLINGS								LOANS ON DWELLINGS FOR 5 OR MORE FAMILIES		NONOCCUPANT LOANS FROM COLUMNS A, B, C AND D		LOANS ON MANUFACTURED HOME DWELLINGS FROM COLUMNS A,B,C AND D	
	HOME PURCHASE LOANS				REFINANCINGS		HOME IMPROVEMENT LOANS							
	FHA, FSA/RHS & VA		CONVENTIONAL											
	A		B		C		D		E		F		G	
	NUMBER	($000'S)	NUMBER	($000'S)	NUMBER	($000'S)	NUMBER	($000'S)	NUMBER	($000'S)	NUMBER	($000'S)	NUMBER	($000'S)
PRINCIPAL CITY 24/														
LOANS ORIGINATED	99999999	99999999	99999999	99999999	99999999	99999999	99999999	99999999	99999999	99999999	99999999	99999999	99999999	99999999
APPLICAT'N APPROVED, NOT ACCEPTED	99999999	99999999	99999999	99999999	99999999	99999999	99999999	99999999	99999999	99999999	99999999	99999999	99999999	99999999
APPLICATIONS DENIED	99999999	99999999	99999999	99999999	99999999	99999999	99999999	99999999	99999999	99999999	99999999	99999999	99999999	99999999
APPLICATIONS WITHDRAWN	99999999	99999999	99999999	99999999	99999999	99999999	99999999	99999999	99999999	99999999	99999999	99999999	99999999	99999999
FILES CLOSED FOR INCOMPLETENESS	99999999	99999999	99999999	99999999	99999999	99999999	99999999	99999999	99999999	99999999	99999999	99999999	99999999	99999999
MSA/MD LESS PRINCIPAL CITY 25/														
LOANS ORIGINATED	99999999	99999999	99999999	99999999	99999999	99999999	99999999	99999999	99999999	99999999	99999999	99999999	99999999	99999999
APPLICAT'N APPROVED, NOT ACCEPTED	99999999	99999999	99999999	99999999	99999999	99999999	99999999	99999999	99999999	99999999	99999999	99999999	99999999	99999999
APPLICATIONS DENIED	99999999	99999999	99999999	99999999	99999999	99999999	99999999	99999999	99999999	99999999	99999999	99999999	99999999	99999999
APPLICATIONS WITHDRAWN	99999999	99999999	99999999	99999999	99999999	99999999	99999999	99999999	99999999	99999999	99999999	99999999	99999999	99999999
FILES CLOSED FOR INCOMPLETENESS	99999999	99999999	99999999	99999999	99999999	99999999	99999999	99999999	99999999	99999999	99999999	99999999	99999999	99999999

TABLE 11-1: PRICING INFORMATION FOR FHA HOME-PURCHASE LOANS, FIRST LIEN, 1- TO 4-FAMILY OWNER-OCCUPIED DWELLING (EXCLUDES MANUFACTURED HOMES), BY BORROWER OR CENSUS TRACT CHARACTERISTICS, 2004

PAGE: 99999
RUN DATE: MM/DD/CCYY

INSTITUTION: XXXXXXXXXX-X XXXXXXXXXXXXXXXXXXXXXXXXXXXXXX

MSA/MD: 99999 - XXXXXXXXXXXXXXXXXXXXXXXXXXXXXXXXXXXXXXXX

BORROWER OR CENSUS TRACT CHARACTERISTICS	15/ NO REPORTED PRICING DATA #	REPORTED PRICING DATA #	PERCENTAGE POINTS ABOVE TREASURY:ONLY INCL. LOANS WITH APR ABOVE THE THRESHOLD 16/ 3 - 3.99 #	4 - 4.99 #	5 - 5.99 #	6 - 6.99 #	7 - 7.99 #	8 OR MORE #	MEAN	MEDIAN
BORROWER CHARACTERISTICS										
RACE 5/										
AMERICAN INDIAN/ALASKA NATIVE	999999999	999999999	99999999	99999999	99999999	99999999	99999999	99999999	99.99	99.99
ASIAN	999999999	999999999	99999999	99999999	99999999	99999999	99999999	99999999	99.99	99.99
BLACK OR AFRICAN AMERICAN	999999999	999999999	99999999	99999999	99999999	99999999	99999999	99999999	99.99	99.99
NATIVE HAWAIIAN/OTHER PACIFIC ISLND	999999999	999999999	99999999	99999999	99999999	99999999	99999999	99999999	99.99	99.99
WHITE	999999999	999999999	99999999	99999999	99999999	99999999	99999999	99999999	99.99	99.99
2 OR MORE MINORITY RACES	999999999	999999999	99999999	99999999	99999999	99999999	99999999	99999999	99.99	99.99
JOINT (WHITE/MINORITY RACE)	999999999	999999999	99999999	99999999	99999999	99999999	99999999	99999999	99.99	99.99
RACE NOT AVAILABLE 6/	999999999	999999999	99999999	99999999	99999999	99999999	99999999	99999999	99.99	99.99
ETHNICITY 7/										
HISPANIC OR LATINO	999999999	999999999	99999999	99999999	99999999	99999999	99999999	99999999	99.99	99.99
NOT HISPANIC OR LATINO	999999999	999999999	99999999	99999999	99999999	99999999	99999999	99999999	99.99	99.99
JOINT (HISPANIC OR LATINO/ NOT HISPANIC OR LATINO)	999999999	999999999	99999999	99999999	99999999	99999999	99999999	99999999	99.99	99.99
ETHNICITY NOT AVAILABLE 6/	999999999	999999999	99999999	99999999	99999999	99999999	99999999	99999999	99.99	99.99
MINORITY STATUS 8/										
WHITE NON-HISPANIC	999999999	999999999	99999999	99999999	99999999	99999999	99999999	99999999	99.99	99.99
OTHERS, INCLUDING HISPANIC	999999999	999999999	99999999	99999999	99999999	99999999	99999999	99999999	99.99	99.99
INCOME 9/										
LESS THAN 50% OF MSA/MD MEDIAN	999999999	999999999	99999999	99999999	99999999	99999999	99999999	99999999	99.99	99.99
50-79% OF MSA/MD MEDIAN	999999999	999999999	99999999	99999999	99999999	99999999	99999999	99999999	99.99	99.99
80-99% OF MSA/MD MEDIAN	999999999	999999999	99999999	99999999	99999999	99999999	99999999	99999999	99.99	99.99
100-119% OF MSA/MD MEDIAN	999999999	999999999	99999999	99999999	99999999	99999999	99999999	99999999	99.99	99.99
120% OR MORE OF MSA/MD MEDIAN	999999999	999999999	99999999	99999999	99999999	99999999	99999999	99999999	99.99	99.99
INCOME NOT AVAILABLE 6/	999999999	999999999	99999999	99999999	99999999	99999999	99999999	99999999	99.99	99.99
GENDER 19/										
MALE	999999999	999999999	99999999	99999999	99999999	99999999	99999999	99999999	99.99	99.99
FEMALE	999999999	999999999	99999999	99999999	99999999	99999999	99999999	99999999	99.99	99.99
JOINT (MALE/FEMALE)	999999999	999999999	99999999	99999999	99999999	99999999	99999999	99999999	99.99	99.99
GENDER NOT AVAILABLE 6/	999999999	999999999	99999999	99999999	99999999	99999999	99999999	99999999	99.99	99.99
CENSUS TRACT CHARACTERISTICS 10/										
RACIAL/ETHNIC COMPOSITION 11/										
LESS THAN 10% MINORITY	999999999	999999999	99999999	99999999	99999999	99999999	99999999	99999999	99.99	99.99
10-19% MINORITY	999999999	999999999	99999999	99999999	99999999	99999999	99999999	99999999	99.99	99.99
20-49% MINORITY	999999999	999999999	99999999	99999999	99999999	99999999	99999999	99999999	99.99	99.99
50-79% MINORITY	999999999	999999999	99999999	99999999	99999999	99999999	99999999	99999999	99.99	99.99
80-100% MINORITY	999999999	999999999	99999999	99999999	99999999	99999999	99999999	99999999	99.99	99.99
INCOME CHARACTERISTICS 12/ 13/										
LOW INCOME	999999999	999999999	99999999	99999999	99999999	99999999	99999999	99999999	99.99	99.99
MODERATE INCOME	999999999	999999999	99999999	99999999	99999999	99999999	99999999	99999999	99.99	99.99
MIDDLE INCOME	999999999	999999999	99999999	99999999	99999999	99999999	99999999	99999999	99.99	99.99
UPPER INCOME	999999999	999999999	99999999	99999999	99999999	99999999	99999999	99999999	99.99	99.99

TABLE 11-1: PRICING INFORMATION FOR FHA HOME-PURCHASE LOANS, FIRST LIEN, 1- TO 4-FAMILY OWNER-OCCUPIED DWELLING (EXCLUDES MANUFACTURED HOMES), BY BORROWER OR CENSUS TRACT CHARACTERISTICS, 2004

PAGE: 99999
RUN DATE: MM/DD/CCYY

INSTITUTION: XXXXXXXXXX-X XXXXXXXXXXXXXXXXXXXXXXXXXXXXXX

MSA/MD: 99999 - XXXXXXXXXXXXXXXXXXXXXXXXXXXXXXXXXXXXXXXX

BORROWER OR CENSUS TRACT CHARACTERISTICS	15/ NO REPORTED PRICING DATA $000'S	REPORTED PRICING DATA $000'S	PERCENTAGE POINTS ABOVE TREASURY: ONLY INCL. LOANS WITH APR ABOVE THE THRESHOLD 16/ 3 - 3.99 $000'S	4 - 4.99 $000'S	5 - 5.99 $000'S	6 - 6.99 $000'S	7 - 7.99 $000'S	8 OR MORE $000'S	MEAN	MEDIAN
BORROWER CHARACTERISTICS										
RACE 5/										
AMERICAN INDIAN/ALASKA NATIVE	999999999	999999999	99999999	99999999	99999999	99999999	99999999	99999999	NA	NA
ASIAN	999999999	999999999	99999999	99999999	99999999	99999999	99999999	99999999	NA	NA
BLACK OR AFRICAN AMERICAN	999999999	999999999	99999999	99999999	99999999	99999999	99999999	99999999	NA	NA
NATIVE HAWAIIAN/OTHER PACIFIC ISLND	999999999	999999999	99999999	99999999	99999999	99999999	99999999	99999999	NA	NA
WHITE	999999999	999999999	99999999	99999999	99999999	99999999	99999999	99999999	NA	NA
2 OR MORE MINORITY RACES	999999999	999999999	99999999	99999999	99999999	99999999	99999999	99999999	NA	NA
JOINT (WHITE/MINORITY RACE)	999999999	999999999	99999999	99999999	99999999	99999999	99999999	99999999	NA	NA
RACE NOT AVAILABLE 6/	999999999	999999999	99999999	99999999	99999999	99999999	99999999	99999999	NA	NA
ETHNICITY 7/										
HISPANIC OR LATINO	999999999	999999999	99999999	99999999	99999999	99999999	99999999	99999999	NA	NA
NOT HISPANIC OR LATINO	999999999	999999999	99999999	99999999	99999999	99999999	99999999	99999999	NA	NA
JOINT (HISPANIC OR LATINO/ NOT HISPANIC OR LATINO)	999999999	999999999	99999999	99999999	99999999	99999999	99999999	99999999	NA	NA
ETHNICITY NOT AVAILABLE 6/	999999999	999999999	99999999	99999999	99999999	99999999	99999999	99999999	NA	NA
MINORITY STATUS 8/										
WHITE NON-HISPANIC	999999999	999999999	99999999	99999999	99999999	99999999	99999999	99999999	NA	NA
OTHERS, INCLUDING HISPANIC	999999999	999999999	99999999	99999999	99999999	99999999	99999999	99999999	NA	NA
INCOME 9/										
LESS THAN 50% OF MSA/MD MEDIAN	999999999	999999999	99999999	99999999	99999999	99999999	99999999	99999999	NA	NA
50-79% OF MSA/MD MEDIAN	999999999	999999999	99999999	99999999	99999999	99999999	99999999	99999999	NA	NA
80-99% OF MSA/MD MEDIAN	999999999	999999999	99999999	99999999	99999999	99999999	99999999	99999999	NA	NA
100-119% OF MSA/MD MEDIAN	999999999	999999999	99999999	99999999	99999999	99999999	99999999	99999999	NA	NA
120% OR MORE OF MSA/MD MEDIAN	999999999	999999999	99999999	99999999	99999999	99999999	99999999	99999999	NA	NA
INCOME NOT AVAILABLE 6/	999999999	999999999	99999999	99999999	99999999	99999999	99999999	99999999	NA	AN
GENDER 19/										
MALE	999999999	999999999	99999999	99999999	99999999	99999999	99999999	99999999	NA	NA
FEMALE	999999999	999999999	99999999	99999999	99999999	99999999	99999999	99999999	NA	NA
JOINT (MALE/FEMALE)	999999999	999999999	99999999	99999999	99999999	99999999	99999999	99999999	NA	NA
GENDER NOT AVAILABLE 6/	999999999	999999999	99999999	99999999	99999999	99999999	99999999	99999999	NA	NA
CENSUS TRACT CHARACTERISTICS 10/										
RACIAL/ETHNIC COMPOSITION 11/										
LESS THAN 10% MINORITY	999999999	999999999	99999999	99999999	99999999	99999999	99999999	99999999	NA	NA
10-19% MINORITY	999999999	999999999	99999999	99999999	99999999	99999999	99999999	99999999	NA	NA
20-49% MINORITY	999999999	999999999	99999999	99999999	99999999	99999999	99999999	99999999	NA	NA
50-79% MINORITY	999999999	999999999	99999999	99999999	99999999	99999999	99999999	99999999	NA	NA
80-100% MINORITY	999999999	999999999	99999999	99999999	99999999	99999999	99999999	99999999	NA	NA
INCOME CHARACTERISTICS 12/ 13/										
LOW INCOME	999999999	999999999	99999999	99999999	99999999	99999999	99999999	99999999	NA	NA
MODERATE INCOME	999999999	999999999	99999999	99999999	99999999	99999999	99999999	99999999	NA	NA
MIDDLE INCOME	999999999	999999999	99999999	99999999	99999999	99999999	99999999	99999999	NA	NA
UPPER INCOME	999999999	999999999	99999999	99999999	99999999	99999999	99999999	99999999	NA	NA

TABLE 11-2: PRICING INFORMATION FOR VA HOME-PURCHASE LOANS, FIRST LIEN, 1- TO 4-FAMILY OWNER-OCCUPIED DWELLING (EXCLUDES MANUFACTURED HOMES), BY BORROWER OR CENSUS TRACT CHARACTERISTICS, 2004

PAGE: 99999
RUN DATE: MM/DD/CCYY

INSTITUTION: XXXXXXXXXX-X XXXXXXXXXXXXXXXXXXXXXXXXXXXXXX

MSA/MD: 99999 - XXXXXXXXXXXXXXXXXXXXXXXXXXXXXXXXXXXXXXXX

BORROWER OR CENSUS TRACT CHARACTERISTICS	15/ NO REPORTED PRICING DATA #	REPORTED PRICING DATA #	PERCENTAGE POINTS ABOVE TREASURY:ONLY INCL. LOANS WITH APR ABOVE THE THRESHOLD 16/ 3 - 3.99 #	4 - 4.99 #	5 - 5.99 #	6 - 6.99 #	7 - 7.99 #	8 OR MORE #	MEAN	MEDIAN
BORROWER CHARACTERISTICS										
RACE 5/										
AMERICAN INDIAN/ALASKA NATIVE	999999999	999999999	99999999	99999999	99999999	99999999	99999999	99999999	99.99	99.99
ASIAN	999999999	999999999	99999999	99999999	99999999	99999999	99999999	99999999	99.99	99.99
BLACK OR AFRICAN AMERICAN	999999999	999999999	99999999	99999999	99999999	99999999	99999999	99999999	99.99	99.99
NATIVE HAWAIIAN/OTHER PACIFIC ISLND	999999999	999999999	99999999	99999999	99999999	99999999	99999999	99999999	99.99	99.99
WHITE	999999999	999999999	99999999	99999999	99999999	99999999	99999999	99999999	99.99	99.99
2 OR MORE MINORITY RACES	999999999	999999999	99999999	99999999	99999999	99999999	99999999	99999999	99.99	99.99
JOINT (WHITE/MINORITY RACE)	999999999	999999999	99999999	99999999	99999999	99999999	99999999	99999999	99.99	99.99
RACE NOT AVAILABLE 6/	999999999	999999999	99999999	99999999	99999999	99999999	99999999	99999999	99.99	99.99
ETHNICITY 7/										
HISPANIC OR LATINO	999999999	999999999	99999999	99999999	99999999	99999999	99999999	99999999	99.99	99.99
NOT HISPANIC OR LATINO	999999999	999999999	99999999	99999999	99999999	99999999	99999999	99999999	99.99	99.99
JOINT (HISPANIC OR LATINO/ NOT HISPANIC OR LATINO)	999999999	999999999	99999999	99999999	99999999	99999999	99999999	99999999	99.99	99.99
ETHNICITY NOT AVAILABLE 6/	999999999	999999999	99999999	99999999	99999999	99999999	99999999	99999999	99.99	99.99
MINORITY STATUS 8/										
WHITE NON-HISPANIC	999999999	999999999	99999999	99999999	99999999	99999999	99999999	99999999	99.99	99.99
OTHERS, INCLUDING HISPANIC	999999999	999999999	99999999	99999999	99999999	99999999	99999999	99999999	99.99	99.99
INCOME 9/										
LESS THAN 50% OF MSA/MD MEDIAN	999999999	999999999	99999999	99999999	99999999	99999999	99999999	99999999	99.99	99.99
50-79% OF MSA/MD MEDIAN	999999999	999999999	99999999	99999999	99999999	99999999	99999999	99999999	99.99	99.99
80-99% OF MSA/MD MEDIAN	999999999	999999999	99999999	99999999	99999999	99999999	99999999	99999999	99.99	99.99
100-119% OF MSA/MD MEDIAN	999999999	999999999	99999999	99999999	99999999	99999999	99999999	99999999	99.99	99.99
120% OR MORE OF MSA/MD MEDIAN	999999999	999999999	99999999	99999999	99999999	99999999	99999999	99999999	99.99	99.99
INCOME NOT AVAILABLE 6/	999999999	999999999	99999999	99999999	99999999	99999999	99999999	99999999	99.99	99.99
GENDER 19/										
MALE	999999999	999999999	99999999	99999999	99999999	99999999	99999999	99999999	99.99	99.99
FEMALE	999999999	999999999	99999999	99999999	99999999	99999999	99999999	99999999	99.99	99.99
JOINT (MALE/FEMALE)	999999999	999999999	99999999	99999999	99999999	99999999	99999999	99999999	99.99	99.99
GENDER NOT AVAILABLE 6/	999999999	999999999	99999999	99999999	99999999	99999999	99999999	99999999	99.99	99.99
CENSUS TRACT CHARACTERISTICS 10/										
RACIAL/ETHNIC COMPOSITION 11/										
LESS THAN 10% MINORITY	999999999	999999999	99999999	99999999	99999999	99999999	99999999	99999999	99.99	99.99
10-19% MINORITY	999999999	999999999	99999999	99999999	99999999	99999999	99999999	99999999	99.99	99.99
20-49% MINORITY	999999999	999999999	99999999	99999999	99999999	99999999	99999999	99999999	99.99	99.99
50-79% MINORITY	999999999	999999999	99999999	99999999	99999999	99999999	99999999	99999999	99.99	99.99
80-100% MINORITY	999999999	999999999	99999999	99999999	99999999	99999999	99999999	99999999	99.99	99.99
INCOME CHARACTERISTICS 12/ 13/										
LOW INCOME	999999999	999999999	99999999	99999999	99999999	99999999	99999999	99999999	99.99	99.99
MODERATE INCOME	999999999	999999999	99999999	99999999	99999999	99999999	99999999	99999999	99.99	99.99
MIDDLE INCOME	999999999	999999999	99999999	99999999	99999999	99999999	99999999	99999999	99.99	99.99
UPPER INCOME	999999999	999999999	99999999	99999999	99999999	99999999	99999999	99999999	99.99	99.99

TABLE 11-2: PRICING INFORMATION FOR VA HOME-PURCHASE LOANS, FIRST LIEN, 1- TO 4-FAMILY OWNER-OCCUPIED DWELLING (EXCLUDES MANUFACTURED HOMES), BY BORROWER OR CENSUS TRACT CHARACTERISTICS, 2004

PAGE: 99999
RUN DATE: MM/DD/CCYY

INSTITUTION: XXXXXXXXXX-X XXXXXXXXXXXXXXXXXXXXXXXXXXXXXX

MSA/MD: 99999 - XXXXXXXXXXXXXXXXXXXXXXXXXXXXXXXXXXXXXXXX

BORROWER OR CENSUS TRACT CHARACTERISTICS	15/ NO REPORTED PRICING DATA $000'S	REPORTED PRICING DATA $000'S	PERCENTAGE POINTS ABOVE TREASURY: ONLY INCL. LOANS WITH APR ABOVE THE THRESHOLD 16/ 3 - 3.99 $000'S	4 - 4.99 $000'S	5 - 5.99 $000'S	6 - 6.99 $000'S	7 - 7.99 $000'S	8 OR MORE $000'S	MEAN	MEDIAN
BORROWER CHARACTERISTICS										
RACE 5/										
AMERICAN INDIAN/ALASKA NATIVE	999999999	999999999	99999999	99999999	99999999	99999999	99999999	99999999	NA	NA
ASIAN	999999999	999999999	99999999	99999999	99999999	99999999	99999999	99999999	NA	NA
BLACK OR AFRICAN AMERICAN	999999999	999999999	99999999	99999999	99999999	99999999	99999999	99999999	NA	NA
NATIVE HAWAIIAN/OTHER PACIFIC ISLND	999999999	999999999	99999999	99999999	99999999	99999999	99999999	99999999	NA	NA
WHITE	999999999	999999999	99999999	99999999	99999999	99999999	99999999	99999999	NA	NA
2 OR MORE MINORITY RACES	999999999	999999999	99999999	99999999	99999999	99999999	99999999	99999999	NA	NA
JOINT (WHITE/MINORITY RACE)	999999999	999999999	99999999	99999999	99999999	99999999	99999999	99999999	NA	NA
RACE NOT AVAILABLE 6/	999999999	999999999	99999999	99999999	99999999	99999999	99999999	99999999	NA	NA
ETHNICITY 7/										
HISPANIC OR LATINO	999999999	999999999	99999999	99999999	99999999	99999999	99999999	99999999	NA	NA
NOT HISPANIC OR LATINO	999999999	999999999	99999999	99999999	99999999	99999999	99999999	99999999	NA	NA
JOINT (HISPANIC OR LATINO/ NOT HISPANIC OR LATINO)	999999999	999999999	99999999	99999999	99999999	99999999	99999999	99999999	NA	NA
ETHNICITY NOT AVAILABLE 6/	999999999	999999999	99999999	99999999	99999999	99999999	99999999	99999999	NA	NA
MINORITY STATUS 8/										
WHITE NON-HISPANIC	999999999	999999999	99999999	99999999	99999999	99999999	99999999	99999999	NA	NA
OTHERS, INCLUDING HISPANIC	999999999	999999999	99999999	99999999	99999999	99999999	99999999	99999999	NA	NA
INCOME 9/										
LESS THAN 50% OF MSA/MD MEDIAN	999999999	999999999	99999999	99999999	99999999	99999999	99999999	99999999	NA	NA
50-79% OF MSA/MD MEDIAN	999999999	999999999	99999999	99999999	99999999	99999999	99999999	99999999	NA	NA
80-99% OF MSA/MD MEDIAN	999999999	999999999	99999999	99999999	99999999	99999999	99999999	99999999	NA	NA
100-119% OF MSA/MD MEDIAN	999999999	999999999	99999999	99999999	99999999	99999999	99999999	99999999	NA	NA
120% OR MORE OF MSA/MD MEDIAN	999999999	999999999	99999999	99999999	99999999	99999999	99999999	99999999	NA	NA
INCOME NOT AVAILABLE 6/	999999999	999999999	99999999	99999999	99999999	99999999	99999999	99999999	NA	NA
GENDER 19/										
MALE	999999999	999999999	99999999	99999999	99999999	99999999	99999999	99999999	NA	NA
FEMALE	999999999	999999999	99999999	99999999	99999999	99999999	99999999	99999999	NA	NA
JOINT (MALE/FEMALE)	999999999	999999999	99999999	99999999	99999999	99999999	99999999	99999999	NA	NA
GENDER NOT AVAILABLE 6/	999999999	999999999	99999999	99999999	99999999	99999999	99999999	99999999	NA	NA
CENSUS TRACT CHARACTERISTICS 10/										
RACIAL/ETHNIC COMPOSITION 11/										
LESS THAN 10% MINORITY	999999999	999999999	99999999	99999999	99999999	99999999	99999999	99999999	NA	NA
10-19% MINORITY	999999999	999999999	99999999	99999999	99999999	99999999	99999999	99999999	NA	NA
20-49% MINORITY	999999999	999999999	99999999	99999999	99999999	99999999	99999999	99999999	NA	NA
50-79% MINORITY	999999999	999999999	99999999	99999999	99999999	99999999	99999999	99999999	NA	NA
80-100% MINORITY	999999999	999999999	99999999	99999999	99999999	99999999	99999999	99999999	NA	NA
INCOME CHARACTERISTICS 12/ 13/										
LOW INCOME	999999999	999999999	99999999	99999999	99999999	99999999	99999999	99999999	NA	NA
MODERATE INCOME	999999999	999999999	99999999	99999999	99999999	99999999	99999999	99999999	NA	NA
MIDDLE INCOME	999999999	999999999	99999999	99999999	99999999	99999999	99999999	99999999	NA	NA
UPPER INCOME	999999999	999999999	99999999	99999999	99999999	99999999	99999999	99999999	NA	NA

TABLE 11-3: PRICING INFORMATION FOR CONVENTIONAL HOME-PURCHASE LOANS, FIRST LIEN, 1- TO 4-FAMILY OWNER-OCCUPIED DWELLING (EXCLUDES MANUFACTURED HOMES), BY BORROWER OR CENSUS TRACT CHARACTERISTICS, 2004

PAGE: 99999
RUN DATE: MM/DD/CCYY

INSTITUTION: XXXXXXXXXX-X XXXXXXXXXXXXXXXXXXXXXXXXXXXXXX

MSA/MD: 99999 - XXXXXXXXXXXXXXXXXXXXXXXXXXXXXXXXXXXXXXXX

BORROWER OR CENSUS TRACT CHARACTERISTICS	15/ NO REPORTED PRICING DATA #	REPORTED PRICING DATA #	PERCENTAGE POINTS ABOVE TREASURY:ONLY INCL. LOANS WITH APR ABOVE THE THRESHOLD 16/ 3 - 3.99 #	4 - 4.99 #	5 - 5.99 #	6 - 6.99 #	7 - 7.99 #	8 OR MORE #	MEAN	MEDIAN
BORROWER CHARACTERISTICS										
RACE 5/										
AMERICAN INDIAN/ALASKA NATIVE	999999999	999999999	99999999	99999999	99999999	99999999	99999999	99999999	99.99	99.99
ASIAN	999999999	999999999	99999999	99999999	99999999	99999999	99999999	99999999	99.99	99.99
BLACK OR AFRICAN AMERICAN	999999999	999999999	99999999	99999999	99999999	99999999	99999999	99999999	99.99	99.99
NATIVE HAWAIIAN/OTHER PACIFIC ISLND	999999999	999999999	99999999	99999999	99999999	99999999	99999999	99999999	99.99	99.99
WHITE	999999999	999999999	99999999	99999999	99999999	99999999	99999999	99999999	99.99	99.99
2 OR MORE MINORITY RACES	999999999	999999999	99999999	99999999	99999999	99999999	99999999	99999999	99.99	99.99
JOINT (WHITE/MINORITY RACE)	999999999	999999999	99999999	99999999	99999999	99999999	99999999	99999999	99.99	99.99
RACE NOT AVAILABLE 6/	999999999	999999999	99999999	99999999	99999999	99999999	99999999	99999999	99.99	99.99
ETHNICITY 7/										
HISPANIC OR LATINO	999999999	999999999	99999999	99999999	99999999	99999999	99999999	99999999	99.99	99.99
NOT HISPANIC OR LATINO	999999999	999999999	99999999	99999999	99999999	99999999	99999999	99999999	99.99	99.99
JOINT (HISPANIC OR LATINO/ NOT HISPANIC OR LATINO)	999999999	999999999	99999999	99999999	99999999	99999999	99999999	99999999	99.99	99.99
ETHNICITY NOT AVAILABLE 6/	999999999	999999999	99999999	99999999	99999999	99999999	99999999	99999999	99.99	99.99
MINORITY STATUS 8/										
WHITE NON-HISPANIC	999999999	999999999	99999999	99999999	99999999	99999999	99999999	99999999	99.99	99.99
OTHERS, INCLUDING HISPANIC	999999999	999999999	99999999	99999999	99999999	99999999	99999999	99999999	99.99	99.99
INCOME 9/										
LESS THAN 50% OF MSA/MD MEDIAN	999999999	999999999	99999999	99999999	99999999	99999999	99999999	99999999	99.99	99.99
50-79% OF MSA/MD MEDIAN	999999999	999999999	99999999	99999999	99999999	99999999	99999999	99999999	99.99	99.99
80-99% OF MSA/MD MEDIAN	999999999	999999999	99999999	99999999	99999999	99999999	99999999	99999999	99.99	99.99
100-119% OF MSA/MD MEDIAN	999999999	999999999	99999999	99999999	99999999	99999999	99999999	99999999	99.99	99.99
120% OR MORE OF MSA/MD MEDIAN	999999999	999999999	99999999	99999999	99999999	99999999	99999999	99999999	99.99	99.99
INCOME NOT AVAILABLE 6/	999999999	999999999	99999999	99999999	99999999	99999999	99999999	99999999	99.99	99.99
GENDER 19/										
MALE	999999999	999999999	99999999	99999999	99999999	99999999	99999999	99999999	99.99	99.99
FEMALE	999999999	999999999	99999999	99999999	99999999	99999999	99999999	99999999	99.99	99.99
JOINT (MALE/FEMALE)	999999999	999999999	99999999	99999999	99999999	99999999	99999999	99999999	99.99	99.99
GENDER NOT AVAILABLE 6/	999999999	999999999	99999999	99999999	99999999	99999999	99999999	99999999	99.99	99.99
CENSUS TRACT CHARACTERISTICS 10/										
RACIAL/ETHNIC COMPOSITION 11/										
LESS THAN 10% MINORITY	999999999	999999999	99999999	99999999	99999999	99999999	99999999	99999999	99.99	99.99
10-19% MINORITY	999999999	999999999	99999999	99999999	99999999	99999999	99999999	99999999	99.99	99.99
20-49% MINORITY	999999999	999999999	99999999	99999999	99999999	99999999	99999999	99999999	99.99	99.99
50-79% MINORITY	999999999	999999999	99999999	99999999	99999999	99999999	99999999	99999999	99.99	99.99
80-100% MINORITY	999999999	999999999	99999999	99999999	99999999	99999999	99999999	99999999	99.99	99.99
INCOME CHARACTERISTICS 12/ 13/										
LOW INCOME	999999999	999999999	99999999	99999999	99999999	99999999	99999999	99999999	99.99	99.99
MODERATE INCOME	999999999	999999999	99999999	99999999	99999999	99999999	99999999	99999999	99.99	99.99
MIDDLE INCOME	999999999	999999999	99999999	99999999	99999999	99999999	99999999	99999999	99.99	99.99
UPPER INCOME	999999999	999999999	99999999	99999999	99999999	99999999	99999999	99999999	99.99	99.99

TABLE 11-3: PRICING INFORMATION FOR CONVENTIONAL HOME-PURCHASE LOANS, FIRST LIEN, 1- TO 4-FAMILY OWNER-OCCUPIED DWELLING (EXCLUDES MANUFACTURED HOMES), BY BORROWER OR CENSUS TRACT CHARACTERISTICS, 2004

PAGE: 99999
RUN DATE: MM/DD/CCYY

INSTITUTION: XXXXXXXXXX-X XXXXXXXXXXXXXXXXXXXXXXXXXXXXXX

MSA/MD: 99999 - XXXXXXXXXXXXXXXXXXXXXXXXXXXXXXXXXXXXXXXX

BORROWER OR CENSUS TRACT CHARACTERISTICS	15/ NO REPORTED PRICING DATA $000'S	REPORTED PRICING DATA $000'S	PERCENTAGE POINTS ABOVE TREASURY:ONLY INCL. LOANS WITH APR ABOVE THE THRESHOLD 16/ 3 - 3.99 $000'S	4 - 4.99 $000'S	5 - 5.99 $000'S	6 - 6.99 $000'S	7 - 7.99 $000'S	8 OR MORE $000'S	MEAN	MEDIAN
BORROWER CHARACTERISTICS										
RACE 5/										
AMERICAN INDIAN/ALASKA NATIVE	999999999	999999999	99999999	99999999	99999999	99999999	99999999	99999999	NA	NA
ASIAN	999999999	999999999	99999999	99999999	99999999	99999999	99999999	99999999	NA	NA
BLACK OR AFRICAN AMERICAN	999999999	999999999	99999999	99999999	99999999	99999999	99999999	99999999	NA	NA
NATIVE HAWAIIAN/OTHER PACIFIC ISLND	999999999	999999999	99999999	99999999	99999999	99999999	99999999	99999999	NA	NA
WHITE	999999999	999999999	99999999	99999999	99999999	99999999	99999999	99999999	NA	NA
2 OR MORE MINORITY RACES	999999999	999999999	99999999	99999999	99999999	99999999	99999999	99999999	NA	NA
JOINT (WHITE/MINORITY RACE)	999999999	999999999	99999999	99999999	99999999	99999999	99999999	99999999	NA	NA
RACE NOT AVAILABLE 6/	999999999	999999999	99999999	99999999	99999999	99999999	99999999	99999999	NA	NA
ETHNICITY 7/										
HISPANIC OR LATINO	999999999	999999999	99999999	99999999	99999999	99999999	99999999	99999999	NA	NA
NOT HISPANIC OR LATINO	999999999	999999999	99999999	99999999	99999999	99999999	99999999	99999999	NA	NA
JOINT (HISPANIC OR LATINO/ NOT HISPANIC OR LATINO)	999999999	999999999	99999999	99999999	99999999	99999999	99999999	99999999	NA	NA
ETHNICITY NOT AVAILABLE 6/	999999999	999999999	99999999	99999999	99999999	99999999	99999999	99999999	NA	NA
MINORITY STATUS 8/										
WHITE NON-HISPANIC	999999999	999999999	99999999	99999999	99999999	99999999	99999999	99999999	NA	NA
OTHERS, INCLUDING HISPANIC	999999999	999999999	99999999	99999999	99999999	99999999	99999999	99999999	NA	NA
INCOME 9/										
LESS THAN 50% OF MSA/MD MEDIAN	999999999	999999999	99999999	99999999	99999999	99999999	99999999	99999999	NA	NA
50-79% OF MSA/MD MEDIAN	999999999	999999999	99999999	99999999	99999999	99999999	99999999	99999999	NA	NA
80-99% OF MSA/MD MEDIAN	999999999	999999999	99999999	99999999	99999999	99999999	99999999	99999999	NA	NA
100-119% OF MSA/MD MEDIAN	999999999	999999999	99999999	99999999	99999999	99999999	99999999	99999999	NA	NA
120% OR MORE OF MSA/MD MEDIAN	999999999	999999999	99999999	99999999	99999999	99999999	99999999	99999999	NA	NA
INCOME NOT AVAILABLE 6/	999999999	999999999	99999999	99999999	99999999	99999999	99999999	99999999	NA	NA
GENDER 19/										
MALE	999999999	999999999	99999999	99999999	99999999	99999999	99999999	99999999	NA	NA
FEMALE	999999999	999999999	99999999	99999999	99999999	99999999	99999999	99999999	NA	NA
JOINT (MALE/FEMALE)	999999999	999999999	99999999	99999999	99999999	99999999	99999999	99999999	NA	NA
GENDER NOT AVAILABLE 6/	999999999	999999999	99999999	99999999	99999999	99999999	99999999	99999999	NA	NA
CENSUS TRACT CHARACTERISTICS 10/										
RACIAL/ETHNIC COMPOSITION 11/										
LESS THAN 10% MINORITY	999999999	999999999	99999999	99999999	99999999	99999999	99999999	99999999	NA	NA
10-19% MINORITY	999999999	999999999	99999999	99999999	99999999	99999999	99999999	99999999	NA	NA
20-49% MINORITY	999999999	999999999	99999999	99999999	99999999	99999999	99999999	99999999	NA	NA
50-79% MINORITY	999999999	999999999	99999999	99999999	99999999	99999999	99999999	99999999	NA	NA
80-100% MINORITY	999999999	999999999	99999999	99999999	99999999	99999999	99999999	99999999	NA	NA
INCOME CHARACTERISTICS 12/ 13/										
LOW INCOME	999999999	999999999	99999999	99999999	99999999	99999999	99999999	99999999	NA	NA
MODERATE INCOME	999999999	999999999	99999999	99999999	99999999	99999999	99999999	99999999	NA	NA
MIDDLE INCOME	999999999	999999999	99999999	99999999	99999999	99999999	99999999	99999999	NA	NA
UPPER INCOME	999999999	999999999	99999999	99999999	99999999	99999999	99999999	99999999	NA	NA

TABLE 11-4: PRICING INFORMATION FOR CONVENTIONAL HOME-PURCHASE LOANS, JUNIOR LIEN, 1- TO 4-FAMILY OWNER-OCCUPIED DWELLING (EXCLUDES MANUFACTURED HOMES), BY BORROWER OR CENSUS TRACT CHARACTERISTICS, 2004

PAGE: 99999
RUN DATE: MM/DD/CCYY

INSTITUTION: XXXXXXXXXX-X XXXXXXXXXXXXXXXXXXXXXXXXXXXXXX

MSA/MD: 99999 - XXXXXXXXXXXXXXXXXXXXXXXXXXXXXXXXXXXXXXXX

BORROWER OR CENSUS TRACT CHARACTERISTICS	15/ NO REPORTED PRICING DATA #	REPORTED PRICING DATA #	PERCENTAGE POINTS ABOVE TREASURY:ONLY INCL. LOANS WITH APR ABOVE THE THRESHOLD 16/ 5 - 5.99 #	6 - 6.99 #	7 - 7.99 #	8 - 8.99 #	9 - 9.99 #	10 OR MORE #	MEAN	MEDIAN
BORROWER CHARACTERISTICS										
RACE 5/										
AMERICAN INDIAN/ALASKA NATIVE	999999999	999999999	99999999	99999999	99999999	99999999	99999999	99999999	99.99	99.99
ASIAN	999999999	999999999	99999999	99999999	99999999	99999999	99999999	99999999	99.99	99.99
BLACK OR AFRICAN AMERICAN	999999999	999999999	99999999	99999999	99999999	99999999	99999999	99999999	99.99	99.99
NATIVE HAWAIIAN/OTHER PACIFIC ISLND	999999999	999999999	99999999	99999999	99999999	99999999	99999999	99999999	99.99	99.99
WHITE	999999999	999999999	99999999	99999999	99999999	99999999	99999999	99999999	99.99	99.99
2 OR MORE MINORITY RACES	999999999	999999999	99999999	99999999	99999999	99999999	99999999	99999999	99.99	99.99
JOINT (WHITE/MINORITY RACE)	999999999	999999999	99999999	99999999	99999999	99999999	99999999	99999999	99.99	99.99
RACE NOT AVAILABLE 6/	999999999	999999999	99999999	99999999	99999999	99999999	99999999	99999999	99.99	99.99
ETHNICITY 7/										
HISPANIC OR LATINO	999999999	999999999	99999999	99999999	99999999	99999999	99999999	99999999	99.99	99.99
NOT HISPANIC OR LATINO	999999999	999999999	99999999	99999999	99999999	99999999	99999999	99999999	99.99	99.99
JOINT (HISPANIC OR LATINO/ NOT HISPANIC OR LATINO)	999999999	999999999	99999999	99999999	99999999	99999999	99999999	99999999	99.99	99.99
ETHNICITY NOT AVAILABLE 6/	999999999	999999999	99999999	99999999	99999999	99999999	99999999	99999999	99.99	99.99
MINORITY STATUS 8/										
WHITE NON-HISPANIC	999999999	999999999	99999999	99999999	99999999	99999999	99999999	99999999	99.99	99.99
OTHERS, INCLUDING HISPANIC	999999999	999999999	99999999	99999999	99999999	99999999	99999999	99999999	99.99	99.99
INCOME 9/										
LESS THAN 50% OF MSA/MD MEDIAN	999999999	999999999	99999999	99999999	99999999	99999999	99999999	99999999	99.99	99.99
50-79% OF MSA/MD MEDIAN	999999999	999999999	99999999	99999999	99999999	99999999	99999999	99999999	99.99	99.99
80-99% OF MSA/MD MEDIAN	999999999	999999999	99999999	99999999	99999999	99999999	99999999	99999999	99.99	99.99
100-119% OF MSA/MD MEDIAN	999999999	999999999	99999999	99999999	99999999	99999999	99999999	99999999	99.99	99.99
120% OR MORE OF MSA/MD MEDIAN	999999999	999999999	99999999	99999999	99999999	99999999	99999999	99999999	99.99	99.99
INCOME NOT AVAILABLE 6/	999999999	999999999	99999999	99999999	99999999	99999999	99999999	99999999	99.99	99.99
GENDER 19/										
MALE	999999999	999999999	99999999	99999999	99999999	99999999	99999999	99999999	99.99	99.99
FEMALE	999999999	999999999	99999999	99999999	99999999	99999999	99999999	99999999	99.99	99.99
JOINT (MALE/FEMALE)	999999999	999999999	99999999	99999999	99999999	99999999	99999999	99999999	99.99	99.99
GENDER NOT AVAILABLE 6/	999999999	999999999	99999999	99999999	99999999	99999999	99999999	99999999	99.99	99.99
CENSUS TRACT CHARACTERISTICS 10/										
RACIAL/ETHNIC COMPOSITION 11/										
LESS THAN 10% MINORITY	999999999	999999999	99999999	99999999	99999999	99999999	99999999	99999999	99.99	99.99
10-19% MINORITY	999999999	999999999	99999999	99999999	99999999	99999999	99999999	99999999	99.99	99.99
20-49% MINORITY	999999999	999999999	99999999	99999999	99999999	99999999	99999999	99999999	99.99	99.99
50-79% MINORITY	999999999	999999999	99999999	99999999	99999999	99999999	99999999	99999999	99.99	99.99
80-100% MINORITY	999999999	999999999	99999999	99999999	99999999	99999999	99999999	99999999	99.99	99.99
INCOME CHARACTERISTICS 12/ 13/										
LOW INCOME	999999999	999999999	99999999	99999999	99999999	99999999	99999999	99999999	99.99	99.99
MODERATE INCOME	999999999	999999999	99999999	99999999	99999999	99999999	99999999	99999999	99.99	99.99
MIDDLE INCOME	999999999	999999999	99999999	99999999	99999999	99999999	99999999	99999999	99.99	99.99
UPPER INCOME	999999999	999999999	99999999	99999999	99999999	99999999	99999999	99999999	99.99	99.99

TABLE 11-4: PRICING INFORMATION FOR CONVENTIONAL HOME-PURCHASE LOANS, JUNIOR LIEN, 1- TO 4-FAMILY OWNER-OCCUPIED DWELLING (EXCLUDES MANUFACTURED HOMES), BY BORROWER OR CENSUS TRACT CHARACTERISTICS, 2004

PAGE: 99999
RUN DATE: MM/DD/CCYY

INSTITUTION: XXXXXXXXXX-X XXXXXXXXXXXXXXXXXXXXXXXXXXXXXX

MSA/MD: 99999 - XXXXXXXXXXXXXXXXXXXXXXXXXXXXXXXXXXXXXXXX

BORROWER OR CENSUS TRACT CHARACTERISTICS	15/ NO REPORTED PRICING DATA $000'S	REPORTED PRICING DATA $000'S	PERCENTAGE POINTS ABOVE TREASURY: ONLY INCL. LOANS WITH APR ABOVE THE THRESHOLD 16/ 5 - 5.99 $000'S	6 - 6.99 $000'S	7 - 7.99 $000'S	8 - 8.99 $000'S	9 - 9.99 $000'S	10 OR MORE $000'S	MEAN	MEDIAN
BORROWER CHARACTERISTICS										
RACE 5/										
AMERICAN INDIAN/ALASKA NATIVE	999999999	999999999	99999999	99999999	99999999	99999999	99999999	99999999	NA	NA
ASIAN	999999999	999999999	99999999	99999999	99999999	99999999	99999999	99999999	NA	NA
BLACK OR AFRICAN AMERICAN	999999999	999999999	99999999	99999999	99999999	99999999	99999999	99999999	NA	NA
NATIVE HAWAIIAN/OTHER PACIFIC ISLND	999999999	999999999	99999999	99999999	99999999	99999999	99999999	99999999	NA	NA
WHITE	999999999	999999999	99999999	99999999	99999999	99999999	99999999	99999999	NA	NA
2 OR MORE MINORITY RACES	999999999	999999999	99999999	99999999	99999999	99999999	99999999	99999999	NA	NA
JOINT (WHITE/MINORITY RACE)	999999999	999999999	99999999	99999999	99999999	99999999	99999999	99999999	NA	NA
RACE NOT AVAILABLE 6/	999999999	999999999	99999999	99999999	99999999	99999999	99999999	99999999	NA	NA
ETHNICITY 7/										
HISPANIC OR LATINO	999999999	999999999	99999999	99999999	99999999	99999999	99999999	99999999	NA	NA
NOT HISPANIC OR LATINO	999999999	999999999	99999999	99999999	99999999	99999999	99999999	99999999	NA	NA
JOINT (HISPANIC OR LATINO/ NOT HISPANIC OR LATINO)	999999999	999999999	99999999	99999999	99999999	99999999	99999999	99999999	NA	NA
ETHNICITY NOT AVAILABLE 6/	999999999	999999999	99999999	99999999	99999999	99999999	99999999	99999999	NA	NA
MINORITY STATUS 8/										
WHITE NON-HISPANIC	999999999	999999999	99999999	99999999	99999999	99999999	99999999	99999999	NA	NA
OTHERS, INCLUDING HISPANIC	999999999	999999999	99999999	99999999	99999999	99999999	99999999	99999999	NA	NA
INCOME 9/										
LESS THAN 50% OF MSA/MD MEDIAN	999999999	999999999	99999999	99999999	99999999	99999999	99999999	99999999	NA	NA
50-79% OF MSA/MD MEDIAN	999999999	999999999	99999999	99999999	99999999	99999999	99999999	99999999	NA	NA
80-99% OF MSA/MD MEDIAN	999999999	999999999	99999999	99999999	99999999	99999999	99999999	99999999	NA	NA
100-119% OF MSA/MD MEDIAN	999999999	999999999	99999999	99999999	99999999	99999999	99999999	99999999	NA	NA
120% OR MORE OF MSA/MD MEDIAN	999999999	999999999	99999999	99999999	99999999	99999999	99999999	99999999	NA	NA
INCOME NOT AVAILABLE 6/	999999999	999999999	99999999	99999999	99999999	99999999	99999999	99999999	NA	NA
GENDER 19/										
MALE	999999999	999999999	99999999	99999999	99999999	99999999	99999999	99999999	NA	NA
FEMALE	999999999	999999999	99999999	99999999	99999999	99999999	99999999	99999999	NA	NA
JOINT (MALE/FEMALE)	999999999	999999999	99999999	99999999	99999999	99999999	99999999	99999999	NA	NA
GENDER NOT AVAILABLE 6/	999999999	999999999	99999999	99999999	99999999	99999999	99999999	99999999	NA	NA
CENSUS TRACT CHARACTERISTICS 10/										
RACIAL/ETHNIC COMPOSITION 11/										
LESS THAN 10% MINORITY	999999999	999999999	99999999	99999999	99999999	99999999	99999999	99999999	NA	NA
10-19% MINORITY	999999999	999999999	99999999	99999999	99999999	99999999	99999999	99999999	NA	NA
20-49% MINORITY	999999999	999999999	99999999	99999999	99999999	99999999	99999999	99999999	NA	NA
50-79% MINORITY	999999999	999999999	99999999	99999999	99999999	99999999	99999999	99999999	NA	NA
80-100% MINORITY	999999999	999999999	99999999	99999999	99999999	99999999	99999999	99999999	NA	NA
INCOME CHARACTERISTICS 12/ 13/										
LOW INCOME	999999999	999999999	99999999	99999999	99999999	99999999	99999999	99999999	NA	NA
MODERATE INCOME	999999999	999999999	99999999	99999999	99999999	99999999	99999999	99999999	NA	NA
MIDDLE INCOME	999999999	999999999	99999999	99999999	99999999	99999999	99999999	99999999	NA	NA
UPPER INCOME	999999999	999999999	99999999	99999999	99999999	99999999	99999999	99999999	NA	NA

TABLE 11-5: PRICING INFORMATION FOR FHA REFINANCING LOANS, FIRST LIEN, 1- TO 4-FAMILY OWNER-OCCUPIED DWELLING (EXCLUDES MANUFACTURED HOMES), BY BORROWER OR CENSUS TRACT CHARACTERISTICS

PAGE: 99999
RUN DATE: MM/DD/CCYY

INSTITUTION: XXXXXXXXXX-X XXXXXXXXXXXXXXXXXXXXXXXXXXXXXX

MSA/MD: 99999 - XXXXXXXXXXXXXXXXXXXXXXXXXXXXXXXXXXXXXXXX

BORROWER OR CENSUS TRACT CHARACTERISTICS	15/ NO REPORTED PRICING DATA #	REPORTED PRICING DATA #	PERCENTAGE POINTS ABOVE TREASURY:ONLY INCL. LOANS WITH APR ABOVE THE THRESHOLD 16/ 3 - 3.99 #	4 - 4.99 #	5 - 5.99 #	6 - 6.99 #	7 - 7.99 #	8 OR MORE #	MEAN	MEDIAN	HOEPA LOANS 17/ #
BORROWER CHARACTERISTICS											
RACE 5/											
AMERICAN INDIAN/ALASKA NATIVE	999999999	999999999	99999999	99999999	99999999	99999999	99999999	99999999	99.99	99.99	99999999
ASIAN	999999999	999999999	99999999	99999999	99999999	99999999	99999999	99999999	99.99	99.99	99999999
BLACK OR AFRICAN AMERICAN	999999999	999999999	99999999	99999999	99999999	99999999	99999999	99999999	99.99	99.99	99999999
NATIVE HAWAIIAN/OTHER PACIFIC ISLND	999999999	999999999	99999999	99999999	99999999	99999999	99999999	99999999	99.99	99.99	99999999
WHITE	999999999	999999999	99999999	99999999	99999999	99999999	99999999	99999999	99.99	99.99	99999999
2 OR MORE MINORITY RACES	999999999	999999999	99999999	99999999	99999999	99999999	99999999	99999999	99.99	99.99	99999999
JOINT (WHITE/MINORITY RACE)	999999999	999999999	99999999	99999999	99999999	99999999	99999999	99999999	99.99	99.99	99999999
RACE NOT AVAILABLE 6/	999999999	999999999	99999999	99999999	99999999	99999999	99999999	99999999	99.99	99.99	99999999
ETHNICITY 7/											
HISPANIC OR LATINO	999999999	999999999	99999999	99999999	99999999	99999999	99999999	99999999	99.99	99.99	99999999
NOT HISPANIC OR LATINO	999999999	999999999	99999999	99999999	99999999	99999999	99999999	99999999	99.99	99.99	99999999
JOINT (HISPANIC OR LATINO/ NOT HISPANIC OR LATINO)	999999999	999999999	99999999	99999999	99999999	99999999	99999999	99999999	99.99	99.99	99999999
ETHNICITY NOT AVAILABLE 6/	999999999	999999999	99999999	99999999	99999999	99999999	99999999	99999999	99.99	99.99	99999999
MINORITY STATUS 8/											
WHITE NON-HISPANIC	999999999	999999999	99999999	99999999	99999999	99999999	99999999	99999999	99.99	99.99	99999999
OTHERS, INCLUDING HISPANIC	999999999	999999999	99999999	99999999	99999999	99999999	99999999	99999999	99.99	99.99	99999999
INCOME 9/											
LESS THAN 50% OF MSA/MD MEDIAN	999999999	999999999	99999999	99999999	99999999	99999999	99999999	99999999	99.99	99.99	99999999
50-79% OF MSA/MD MEDIAN	999999999	999999999	99999999	99999999	99999999	99999999	99999999	99999999	99.99	99.99	99999999
80-99% OF MSA/MD MEDIAN	999999999	999999999	99999999	99999999	99999999	99999999	99999999	99999999	99.99	99.99	99999999
100-119% OF MSA/MD MEDIAN	999999999	999999999	99999999	99999999	99999999	99999999	99999999	99999999	99.99	99.99	99999999
120% OR MORE OF MSA/MD MEDIAN	999999999	999999999	99999999	99999999	99999999	99999999	99999999	99999999	99.99	99.99	99999999
INCOME NOT AVAILABLE 6/	999999999	999999999	99999999	99999999	99999999	99999999	99999999	99999999	99.99	99.99	99999999
GENDER 19/											
MALE	999999999	999999999	99999999	99999999	99999999	99999999	99999999	99999999	99.99	99.99	99999999
FEMALE	999999999	999999999	99999999	99999999	99999999	99999999	99999999	99999999	99.99	99.99	99999999
JOINT (MALE/FEMALE)	999999999	999999999	99999999	99999999	99999999	99999999	99999999	99999999	99.99	99.99	99999999
GENDER NOT AVAILABLE 6/	999999999	999999999	99999999	99999999	99999999	99999999	99999999	99999999	99.99	99.99	99999999
CENSUS TRACT CHARACTERISTICS 10/											
RACIAL/ETHNIC COMPOSITION 11/											
LESS THAN 10% MINORITY	999999999	999999999	99999999	99999999	99999999	99999999	99999999	99999999	99.99	99.99	99999999
10-19% MINORITY	999999999	999999999	99999999	99999999	99999999	99999999	99999999	99999999	99.99	99.99	99999999
20-49% MINORITY	999999999	999999999	99999999	99999999	99999999	99999999	99999999	99999999	99.99	99.99	99999999
50-79% MINORITY	999999999	999999999	99999999	99999999	99999999	99999999	99999999	99999999	99.99	99.99	99999999
80-100% MINORITY	999999999	999999999	99999999	99999999	99999999	99999999	99999999	99999999	99.99	99.99	99999999
INCOME CHARACTERISTICS 12/ 13/											
LOW INCOME	999999999	999999999	99999999	99999999	99999999	99999999	99999999	99999999	99.99	99.99	99999999
MODERATE INCOME	999999999	999999999	99999999	99999999	99999999	99999999	99999999	99999999	99.99	99.99	99999999
MIDDLE INCOME	999999999	999999999	99999999	99999999	99999999	99999999	99999999	99999999	99.99	99.99	99999999
UPPER INCOME	999999999	999999999	99999999	99999999	99999999	99999999	99999999	99999999	99.99	99.99	99999999

TABLE 11-5: PRICING INFORMATION FOR FHA REFINANCING LOANS, FIRST LIEN, 1- TO 4-FAMILY OWNER-OCCUPIED DWELLING (EXCLUDES MANUFACTURED HOMES), BY BORROWER OR CENSUS TRACT CHARACTERISTICS

PAGE: 99999
RUN DATE: MM/DD/CCYY

INSTITUTION: XXXXXXXXXX-X XXXXXXXXXXXXXXXXXXXXXXXXXXXXXX

MSA/MD: 99999 - XXXXXXXXXXXXXXXXXXXXXXXXXXXXXXXXXXXXXXXX

BORROWER OR CENSUS TRACT CHARACTERISTICS	15/ NO REPORTED PRICING DATA $000'S	REPORTED PRICING DATA $000'S	PERCENTAGE POINTS ABOVE TREASURY:ONLY INCL. LOANS WITH APR ABOVE THE THRESHOLD 16/ 3 - 3.99 $000'S	4 - 4.99 $000'S	5 - 5.99 $000'S	6 - 6.99 $000'S	7 - 7.99 $000'S	8 OR MORE $000'S	MEAN	MEDIAN	HOEPA LOANS 17/ $000'S
BORROWER CHARACTERISTICS											
RACE 5/											
AMERICAN INDIAN/ALASKA NATIVE	999999999	999999999	99999999	99999999	99999999	99999999	99999999	99999999	NA	NA	99999999
ASIAN	999999999	999999999	99999999	99999999	99999999	99999999	99999999	99999999	NA	NA	99999999
BLACK OR AFRICAN AMERICAN	999999999	999999999	99999999	99999999	99999999	99999999	99999999	99999999	NA	NA	99999999
NATIVE HAWAIIAN/OTHER PACIFIC ISLND	999999999	999999999	99999999	99999999	99999999	99999999	99999999	99999999	NA	NA	99999999
WHITE	999999999	999999999	99999999	99999999	99999999	99999999	99999999	99999999	NA	NA	99999999
2 OR MORE MINORITY RACES	999999999	999999999	99999999	99999999	99999999	99999999	99999999	99999999	NA	NA	99999999
JOINT (WHITE/MINORITY RACE)	999999999	999999999	99999999	99999999	99999999	99999999	99999999	99999999	NA	NA	99999999
RACE NOT AVAILABLE 6/	999999999	999999999	99999999	99999999	99999999	99999999	99999999	99999999	NA	NA	99999999
ETHNICITY 7/											
HISPANIC OR LATINO	999999999	999999999	99999999	99999999	99999999	99999999	99999999	99999999	NA	NA	99999999
NOT HISPANIC OR LATINO	999999999	999999999	99999999	99999999	99999999	99999999	99999999	99999999	NA	NA	99999999
JOINT (HISPANIC OR LATINO/ NOT HISPANIC OR LATINO)	999999999	999999999	99999999	99999999	99999999	99999999	99999999	99999999	NA	NA	99999999
ETHNICITY NOT AVAILABLE 6/	999999999	999999999	99999999	99999999	99999999	99999999	99999999	99999999	NA	NA	99999999
MINORITY STATUS 8/											
WHITE NON-HISPANIC	999999999	999999999	99999999	99999999	99999999	99999999	99999999	99999999	NA	NA	99999999
OTHERS, INCLUDING HISPANIC	999999999	999999999	99999999	99999999	99999999	99999999	99999999	99999999	NA	NA	99999999
INCOME 9/											
LESS THAN 50% OF MSA/MD MEDIAN	999999999	999999999	99999999	99999999	99999999	99999999	99999999	99999999	NA	NA	99999999
50-79% OF MSA/MD MEDIAN	999999999	999999999	99999999	99999999	99999999	99999999	99999999	99999999	NA	NA	99999999
80-99% OF MSA/MD MEDIAN	999999999	999999999	99999999	99999999	99999999	99999999	99999999	99999999	NA	NA	99999999
100-119% OF MSA/MD MEDIAN	999999999	999999999	99999999	99999999	99999999	99999999	99999999	99999999	NA	NA	99999999
120% OR MORE OF MSA/MD MEDIAN	999999999	999999999	99999999	99999999	99999999	99999999	99999999	99999999	NA	NA	99999999
INCOME NOT AVAILABLE 6/	999999999	999999999	99999999	99999999	99999999	99999999	99999999	99999999	NA	NA	99999999
GENDER 19/											
MALE	999999999	999999999	99999999	99999999	99999999	99999999	99999999	99999999	NA	NA	99999999
FEMALE	999999999	999999999	99999999	99999999	99999999	99999999	99999999	99999999	NA	NA	99999999
JOINT (MALE/FEMALE)	999999999	999999999	99999999	99999999	99999999	99999999	99999999	99999999	NA	NA	99999999
GENDER NOT AVAILABLE 6/	999999999	999999999	99999999	99999999	99999999	99999999	99999999	99999999	NA	NA	99999999
CENSUS TRACT CHARACTERISTICS 10/											
RACIAL/ETHNIC COMPOSITION 11/											
LESS THAN 10% MINORITY	999999999	999999999	99999999	99999999	99999999	99999999	99999999	99999999	NA	NA	99999999
10-19% MINORITY	999999999	999999999	99999999	99999999	99999999	99999999	99999999	99999999	NA	NA	99999999
20-49% MINORITY	999999999	999999999	99999999	99999999	99999999	99999999	99999999	99999999	NA	NA	99999999
50-79% MINORITY	999999999	999999999	99999999	99999999	99999999	99999999	99999999	99999999	NA	NA	99999999
80-100% MINORITY	999999999	999999999	99999999	99999999	99999999	99999999	99999999	99999999	NA	NA	99999999
INCOME CHARACTERISTICS 12/ 13/											
LOW INCOME	999999999	999999999	99999999	99999999	99999999	99999999	99999999	99999999	NA	NA	99999999
MODERATE INCOME	999999999	999999999	99999999	99999999	99999999	99999999	99999999	99999999	NA	NA	99999999
MIDDLE INCOME	999999999	999999999	99999999	99999999	99999999	99999999	99999999	99999999	NA	NA	99999999
UPPER INCOME	999999999	999999999	99999999	99999999	99999999	99999999	99999999	99999999	NA	NA	99999999

TABLE 11-6: PRICING INFORMATION FOR VA REFINANCING LOANS, FIRST LIEN, 1- TO 4-FAMILY OWNER-OCCUPIED DWELLING (EXCLUDES MANUFACTURED HOMES), BY BORROWER OR CENSUS TRACT CHARACTERISTICS

PAGE: 99999
RUN DATE: MM/DD/CCYY

INSTITUTION: XXXXXXXXXX-X XXXXXXXXXXXXXXXXXXXXXXXXXXXXXX

MSA/MD: 99999 - XXXXXXXXXXXXXXXXXXXXXXXXXXXXXXXXXXXXXXXX

BORROWER OR CENSUS TRACT CHARACTERISTICS	15/ NO REPORTED PRICING DATA #	REPORTED PRICING DATA #	PERCENTAGE POINTS ABOVE TREASURY:ONLY INCL. LOANS WITH APR ABOVE THE THRESHOLD 16/ 3 - 3.99 #	4 - 4.99 #	5 - 5.99 #	6 - 6.99 #	7 - 7.99 #	8 OR MORE #	MEAN	MEDIAN	HOEPA LOANS 17/ #
BORROWER CHARACTERISTICS											
RACE 5/											
AMERICAN INDIAN/ALASKA NATIVE	999999999	999999999	99999999	99999999	99999999	99999999	99999999	99999999	99.99	99.99	99999999
ASIAN	999999999	999999999	99999999	99999999	99999999	99999999	99999999	99999999	99.99	99.99	99999999
BLACK OR AFRICAN AMERICAN	999999999	999999999	99999999	99999999	99999999	99999999	99999999	99999999	99.99	99.99	99999999
NATIVE HAWAIIAN/OTHER PACIFIC ISLND	999999999	999999999	99999999	99999999	99999999	99999999	99999999	99999999	99.99	99.99	99999999
WHITE	999999999	999999999	99999999	99999999	99999999	99999999	99999999	99999999	99.99	99.99	99999999
2 OR MORE MINORITY RACES	999999999	999999999	99999999	99999999	99999999	99999999	99999999	99999999	99.99	99.99	99999999
JOINT (WHITE/MINORITY RACE)	999999999	999999999	99999999	99999999	99999999	99999999	99999999	99999999	99.99	99.99	99999999
RACE NOT AVAILABLE 6/	999999999	999999999	99999999	99999999	99999999	99999999	99999999	99999999	99.99	99.99	99999999
ETHNICITY 7/											
HISPANIC OR LATINO	999999999	999999999	99999999	99999999	99999999	99999999	99999999	99999999	99.99	99.99	99999999
NOT HISPANIC OR LATINO	999999999	999999999	99999999	99999999	99999999	99999999	99999999	99999999	99.99	99.99	99999999
JOINT (HISPANIC OR LATINO/ NOT HISPANIC OR LATINO)	999999999	999999999	99999999	99999999	99999999	99999999	99999999	99999999	99.99	99.99	99999999
ETHNICITY NOT AVAILABLE 6/	999999999	999999999	99999999	99999999	99999999	99999999	99999999	99999999	99.99	99.99	99999999
MINORITY STATUS 8/											
WHITE NON-HISPANIC	999999999	999999999	99999999	99999999	99999999	99999999	99999999	99999999	99.99	99.99	99999999
OTHERS, INCLUDING HISPANIC	999999999	999999999	99999999	99999999	99999999	99999999	99999999	99999999	99.99	99.99	99999999
INCOME 9/											
LESS THAN 50% OF MSA/MD MEDIAN	999999999	999999999	99999999	99999999	99999999	99999999	99999999	99999999	99.99	99.99	99999999
50-79% OF MSA/MD MEDIAN	999999999	999999999	99999999	99999999	99999999	99999999	99999999	99999999	99.99	99.99	99999999
80-99% OF MSA/MD MEDIAN	999999999	999999999	99999999	99999999	99999999	99999999	99999999	99999999	99.99	99.99	99999999
100-119% OF MSA/MD MEDIAN	999999999	999999999	99999999	99999999	99999999	99999999	99999999	99999999	99.99	99.99	99999999
120% OR MORE OF MSA/MD MEDIAN	999999999	999999999	99999999	99999999	99999999	99999999	99999999	99999999	99.99	99.99	99999999
INCOME NOT AVAILABLE 6/	999999999	999999999	99999999	99999999	99999999	99999999	99999999	99999999	99.99	99.99	99999999
GENDER 19/											
MALE	999999999	999999999	99999999	99999999	99999999	99999999	99999999	99999999	99.99	99.99	99999999
FEMALE	999999999	999999999	99999999	99999999	99999999	99999999	99999999	99999999	99.99	99.99	99999999
JOINT (MALE/FEMALE)	999999999	999999999	99999999	99999999	99999999	99999999	99999999	99999999	99.99	99.99	99999999
GENDER NOT AVAILABLE 6/	999999999	999999999	99999999	99999999	99999999	99999999	99999999	99999999	99.99	99.99	99999999
CENSUS TRACT CHARACTERISTICS 10/											
RACIAL/ETHNIC COMPOSITION 11/											
LESS THAN 10% MINORITY	999999999	999999999	99999999	99999999	99999999	99999999	99999999	99999999	99.99	99.99	99999999
10-19% MINORITY	999999999	999999999	99999999	99999999	99999999	99999999	99999999	99999999	99.99	99.99	99999999
20-49% MINORITY	999999999	999999999	99999999	99999999	99999999	99999999	99999999	99999999	99.99	99.99	99999999
50-79% MINORITY	999999999	999999999	99999999	99999999	99999999	99999999	99999999	99999999	99.99	99.99	99999999
80-100% MINORITY	999999999	999999999	99999999	99999999	99999999	99999999	99999999	99999999	99.99	99.99	99999999
INCOME CHARACTERISTICS 12/ 13/											
LOW INCOME	999999999	999999999	99999999	99999999	99999999	99999999	99999999	99999999	99.99	99.99	99999999
MODERATE INCOME	999999999	999999999	99999999	99999999	99999999	99999999	99999999	99999999	99.99	99.99	99999999
MIDDLE INCOME	999999999	999999999	99999999	99999999	99999999	99999999	99999999	99999999	99.99	99.99	99999999
UPPER INCOME	999999999	999999999	99999999	99999999	99999999	99999999	99999999	99999999	99.99	99.99	99999999

TABLE 11-6: PRICING INFORMATION FOR VA REFINANCING LOANS, FIRST LIEN, 1- TO 4-FAMILY OWNER-OCCUPIED DWELLING (EXCLUDES MANUFACTURED HOMES), BY BORROWER OR CENSUS TRACT CHARACTERISTICS

PAGE: 99999
RUN DATE: MM/DD/CCYY

INSTITUTION: XXXXXXXXXX-X XXXXXXXXXXXXXXXXXXXXXXXXXXXXXX

MSA/MD: 99999 - XXXXXXXXXXXXXXXXXXXXXXXXXXXXXXXXXXXXXXXX

BORROWER OR CENSUS TRACT CHARACTERISTICS	15/ NO REPORTED PRICING DATA $000'S	REPORTED PRICING DATA $000'S	PERCENTAGE POINTS ABOVE TREASURY: ONLY INCL. LOANS WITH APR ABOVE THE THRESHOLD 16/ 3 - 3.99 $000'S	4 - 4.99 $000'S	5 - 5.99 $000'S	6 - 6.99 $000'S	7 - 7.99 $000'S	8 OR MORE $000'S	MEAN	MEDIAN	HOEPA LOANS 17/ $000'S
BORROWER CHARACTERISTICS											
RACE 5/											
AMERICAN INDIAN/ALASKA NATIVE	999999999	999999999	99999999	99999999	99999999	99999999	99999999	99999999	NA	NA	99999999
ASIAN	999999999	999999999	99999999	99999999	99999999	99999999	99999999	99999999	NA	NA	99999999
BLACK OR AFRICAN AMERICAN	999999999	999999999	99999999	99999999	99999999	99999999	99999999	99999999	NA	NA	99999999
NATIVE HAWAIIAN/OTHER PACIFIC ISLND	999999999	999999999	99999999	99999999	99999999	99999999	99999999	99999999	NA	NA	99999999
WHITE	999999999	999999999	99999999	99999999	99999999	99999999	99999999	99999999	NA	NA	99999999
2 OR MORE MINORITY RACES	999999999	999999999	99999999	99999999	99999999	99999999	99999999	99999999	NA	NA	99999999
JOINT (WHITE/MINORITY RACE)	999999999	999999999	99999999	99999999	99999999	99999999	99999999	99999999	NA	NA	99999999
RACE NOT AVAILABLE 6/	999999999	999999999	99999999	99999999	99999999	99999999	99999999	99999999	NA	NA	99999999
ETHNICITY 7/											
HISPANIC OR LATINO	999999999	999999999	99999999	99999999	99999999	99999999	99999999	99999999	NA	NA	99999999
NOT HISPANIC OR LATINO	999999999	999999999	99999999	99999999	99999999	99999999	99999999	99999999	NA	NA	99999999
JOINT (HISPANIC OR LATINO/ NOT HISPANIC OR LATINO)	999999999	999999999	99999999	99999999	99999999	99999999	99999999	99999999	NA	NA	99999999
ETHNICITY NOT AVAILABLE 6/	999999999	999999999	99999999	99999999	99999999	99999999	99999999	99999999	NA	NA	99999999
MINORITY STATUS 8/											
WHITE NON-HISPANIC	999999999	999999999	99999999	99999999	99999999	99999999	99999999	99999999	NA	NA	99999999
OTHERS, INCLUDING HISPANIC	999999999	999999999	99999999	99999999	99999999	99999999	99999999	99999999	NA	NA	99999999
INCOME 9/											
LESS THAN 50% OF MSA/MD MEDIAN	999999999	999999999	99999999	99999999	99999999	99999999	99999999	99999999	NA	NA	99999999
50-79% OF MSA/MD MEDIAN	999999999	999999999	99999999	99999999	99999999	99999999	99999999	99999999	NA	NA	99999999
80-99% OF MSA/MD MEDIAN	999999999	999999999	99999999	99999999	99999999	99999999	99999999	99999999	NA	NA	99999999
100-119% OF MSA/MD MEDIAN	999999999	999999999	99999999	99999999	99999999	99999999	99999999	99999999	NA	NA	99999999
120% OR MORE OF MSA/MD MEDIAN	999999999	999999999	99999999	99999999	99999999	99999999	99999999	99999999	NA	NA	99999999
INCOME NOT AVAILABLE 6/	999999999	999999999	99999999	99999999	99999999	99999999	99999999	99999999	NA	NA	99999999
GENDER 19/											
MALE	999999999	999999999	99999999	99999999	99999999	99999999	99999999	99999999	NA	NA	99999999
FEMALE	999999999	999999999	99999999	99999999	99999999	99999999	99999999	99999999	NA	NA	99999999
JOINT (MALE/FEMALE)	999999999	999999999	99999999	99999999	99999999	99999999	99999999	99999999	NA	NA	99999999
GENDER NOT AVAILABLE 6/	999999999	999999999	99999999	99999999	99999999	99999999	99999999	99999999	NA	NA	99999999
CENSUS TRACT CHARACTERISTICS 10/											
RACIAL/ETHNIC COMPOSITION 11/											
LESS THAN 10% MINORITY	999999999	999999999	99999999	99999999	99999999	99999999	99999999	99999999	NA	NA	99999999
10-19% MINORITY	999999999	999999999	99999999	99999999	99999999	99999999	99999999	99999999	NA	NA	99999999
20-49% MINORITY	999999999	999999999	99999999	99999999	99999999	99999999	99999999	99999999	NA	NA	99999999
50-79% MINORITY	999999999	999999999	99999999	99999999	99999999	99999999	99999999	99999999	NA	NA	99999999
80-100% MINORITY	999999999	999999999	99999999	99999999	99999999	99999999	99999999	99999999	NA	NA	99999999
INCOME CHARACTERISTICS 12/ 13/											
LOW INCOME	999999999	999999999	99999999	99999999	99999999	99999999	99999999	99999999	NA	NA	99999999
MODERATE INCOME	999999999	999999999	99999999	99999999	99999999	99999999	99999999	99999999	NA	NA	99999999
MIDDLE INCOME	999999999	999999999	99999999	99999999	99999999	99999999	99999999	99999999	NA	NA	99999999
UPPER INCOME	999999999	999999999	99999999	99999999	99999999	99999999	99999999	99999999	NA	NA	99999999

TABLE 11-7: PRICING INFORMATION FOR CONVENTIONAL REFINANCING LOANS, FIRST LIEN, 1- TO 4-FAMILY OWNER-OCCUPIED DWELLING (EXCLUDES MANUFACTURED HOMES), BY BORROWER OR CENSUS TRACT CHARACTERISTICS

PAGE: 99999
RUN DATE: MM/DD/CCYY

INSTITUTION: XXXXXXXXXX-X XXXXXXXXXXXXXXXXXXXXXXXXXXXXXX

MSA/MD: 99999 - XXXXXXXXXXXXXXXXXXXXXXXXXXXXXXXXXXXXXXXX

BORROWER OR CENSUS TRACT CHARACTERISTICS	15/ NO REPORTED PRICING DATA #	REPORTED PRICING DATA #	PERCENTAGE POINTS ABOVE TREASURY: ONLY INCL. LOANS WITH APR ABOVE THE THRESHOLD 16/ 3 - 3.99 #	4 - 4.99 #	5 - 5.99 #	6 - 6.99 #	7 - 7.99 #	8 OR MORE #	MEAN	MEDIAN	HOEPA LOANS 17/ #
BORROWER CHARACTERISTICS											
RACE 5/											
AMERICAN INDIAN/ALASKA NATIVE	999999999	999999999	99999999	99999999	99999999	99999999	99999999	99999999	99.99	99.99	99999999
ASIAN	999999999	999999999	99999999	99999999	99999999	99999999	99999999	99999999	99.99	99.99	99999999
BLACK OR AFRICAN AMERICAN	999999999	999999999	99999999	99999999	99999999	99999999	99999999	99999999	99.99	99.99	99999999
NATIVE HAWAIIAN/OTHER PACIFIC ISLND	999999999	999999999	99999999	99999999	99999999	99999999	99999999	99999999	99.99	99.99	99999999
WHITE	999999999	999999999	99999999	99999999	99999999	99999999	99999999	99999999	99.99	99.99	99999999
2 OR MORE MINORITY RACES	999999999	999999999	99999999	99999999	99999999	99999999	99999999	99999999	99.99	99.99	99999999
JOINT (WHITE/MINORITY RACE)	999999999	999999999	99999999	99999999	99999999	99999999	99999999	99999999	99.99	99.99	99999999
RACE NOT AVAILABLE 6/	999999999	999999999	99999999	99999999	99999999	99999999	99999999	99999999	99.99	99.99	99999999
ETHNICITY 7/											
HISPANIC OR LATINO	999999999	999999999	99999999	99999999	99999999	99999999	99999999	99999999	99.99	99.99	99999999
NOT HISPANIC OR LATINO	999999999	999999999	99999999	99999999	99999999	99999999	99999999	99999999	99.99	99.99	99999999
JOINT (HISPANIC OR LATINO/ NOT HISPANIC OR LATINO)	999999999	999999999	99999999	99999999	99999999	99999999	99999999	99999999	99.99	99.99	99999999
ETHNICITY NOT AVAILABLE 6/	999999999	999999999	99999999	99999999	99999999	99999999	99999999	99999999	99.99	99.99	99999999
MINORITY STATUS 8/											
WHITE NON-HISPANIC	999999999	999999999	99999999	99999999	99999999	99999999	99999999	99999999	99.99	99.99	99999999
OTHERS, INCLUDING HISPANIC	999999999	999999999	99999999	99999999	99999999	99999999	99999999	99999999	99.99	99.99	99999999
INCOME 9/											
LESS THAN 50% OF MSA/MD MEDIAN	999999999	999999999	99999999	99999999	99999999	99999999	99999999	99999999	99.99	99.99	99999999
50-79% OF MSA/MD MEDIAN	999999999	999999999	99999999	99999999	99999999	99999999	99999999	99999999	99.99	99.99	99999999
80-99% OF MSA/MD MEDIAN	999999999	999999999	99999999	99999999	99999999	99999999	99999999	99999999	99.99	99.99	99999999
100-119% OF MSA/MD MEDIAN	999999999	999999999	99999999	99999999	99999999	99999999	99999999	99999999	99.99	99.99	99999999
120% OR MORE OF MSA/MD MEDIAN	999999999	999999999	99999999	99999999	99999999	99999999	99999999	99999999	99.99	99.99	99999999
INCOME NOT AVAILABLE 6/	999999999	999999999	99999999	99999999	99999999	99999999	99999999	99999999	99.99	99.99	99999999
GENDER 19/											
MALE	999999999	999999999	99999999	99999999	99999999	99999999	99999999	99999999	99.99	99.99	99999999
FEMALE	999999999	999999999	99999999	99999999	99999999	99999999	99999999	99999999	99.99	99.99	99999999
JOINT (MALE/FEMALE)	999999999	999999999	99999999	99999999	99999999	99999999	99999999	99999999	99.99	99.99	99999999
GENDER NOT AVAILABLE 6/	999999999	999999999	99999999	99999999	99999999	99999999	99999999	99999999	99.99	99.99	99999999
CENSUS TRACT CHARACTERISTICS 10/											
RACIAL/ETHNIC COMPOSITION 11/											
LESS THAN 10% MINORITY	999999999	999999999	99999999	99999999	99999999	99999999	99999999	99999999	99.99	99.99	99999999
10-19% MINORITY	999999999	999999999	99999999	99999999	99999999	99999999	99999999	99999999	99.99	99.99	99999999
20-49% MINORITY	999999999	999999999	99999999	99999999	99999999	99999999	99999999	99999999	99.99	99.99	99999999
50-79% MINORITY	999999999	999999999	99999999	99999999	99999999	99999999	99999999	99999999	99.99	99.99	99999999
80-100% MINORITY	999999999	999999999	99999999	99999999	99999999	99999999	99999999	99999999	99.99	99.99	99999999
INCOME CHARACTERISTICS 12/ 13/											
LOW INCOME	999999999	999999999	99999999	99999999	99999999	99999999	99999999	99999999	99.99	99.99	99999999
MODERATE INCOME	999999999	999999999	99999999	99999999	99999999	99999999	99999999	99999999	99.99	99.99	99999999
MIDDLE INCOME	999999999	999999999	99999999	99999999	99999999	99999999	99999999	99999999	99.99	99.99	99999999
UPPER INCOME	999999999	999999999	99999999	99999999	99999999	99999999	99999999	99999999	99.99	99.99	99999999

TABLE 11-7: PRICING INFORMATION FOR CONVENTIONAL REFINANCING LOANS, FIRST LIEN, 1- TO 4-FAMILY OWNER-OCCUPIED DWELLING (EXCLUDES MANUFACTURED HOMES), BY BORROWER OR CENSUS TRACT CHARACTERISTICS

PAGE: 99999
RUN DATE: MM/DD/CCYY

INSTITUTION: XXXXXXXXXX-X XXXXXXXXXXXXXXXXXXXXXXXXXXXXXX

MSA/MD: 99999 - XXXXXXXXXXXXXXXXXXXXXXXXXXXXXXXXXXXXXXXX

BORROWER OR CENSUS TRACT CHARACTERISTICS	15/ NO REPORTED PRICING DATA $000'S	REPORTED PRICING DATA $000'S	PERCENTAGE POINTS ABOVE TREASURY:ONLY INCL. LOANS WITH APR ABOVE THE THRESHOLD 16/ 3 - 3.99 $000'S	4 - 4.99 $000'S	5 - 5.99 $000'S	6 - 6.99 $000'S	7 - 7.99 $000'S	8 OR MORE $000'S	MEAN	MEDIAN	HOEPA LOANS 17/ $000'S
BORROWER CHARACTERISTICS											
RACE 5/											
AMERICAN INDIAN/ALASKA NATIVE	999999999	999999999	99999999	99999999	99999999	99999999	99999999	99999999	NA	NA	99999999
ASIAN	999999999	999999999	99999999	99999999	99999999	99999999	99999999	99999999	NA	NA	99999999
BLACK OR AFRICAN AMERICAN	999999999	999999999	99999999	99999999	99999999	99999999	99999999	99999999	NA	NA	99999999
NATIVE HAWAIIAN/OTHER PACIFIC ISLND	999999999	999999999	99999999	99999999	99999999	99999999	99999999	99999999	NA	NA	99999999
WHITE	999999999	999999999	99999999	99999999	99999999	99999999	99999999	99999999	NA	NA	99999999
2 OR MORE MINORITY RACES	999999999	999999999	99999999	99999999	99999999	99999999	99999999	99999999	NA	NA	99999999
JOINT (WHITE/MINORITY RACE)	999999999	999999999	99999999	99999999	99999999	99999999	99999999	99999999	NA	NA	99999999
RACE NOT AVAILABLE 6/	999999999	999999999	99999999	99999999	99999999	99999999	99999999	99999999	NA	NA	99999999
ETHNICITY 7/											
HISPANIC OR LATINO	999999999	999999999	99999999	99999999	99999999	99999999	99999999	99999999	NA	NA	99999999
NOT HISPANIC OR LATINO	999999999	999999999	99999999	99999999	99999999	99999999	99999999	99999999	NA	NA	99999999
JOINT (HISPANIC OR LATINO/ NOT HISPANIC OR LATINO)	999999999	999999999	99999999	99999999	99999999	99999999	99999999	99999999	NA	NA	99999999
ETHNICITY NOT AVAILABLE 6/	999999999	999999999	99999999	99999999	99999999	99999999	99999999	99999999	NA	NA	99999999
MINORITY STATUS 8/											
WHITE NON-HISPANIC	999999999	999999999	99999999	99999999	99999999	99999999	99999999	99999999	NA	NA	99999999
OTHERS, INCLUDING HISPANIC	999999999	999999999	99999999	99999999	99999999	99999999	99999999	99999999	NA	NA	99999999
INCOME 9/											
LESS THAN 50% OF MSA/MD MEDIAN	999999999	999999999	99999999	99999999	99999999	99999999	99999999	99999999	NA	NA	99999999
50-79% OF MSA/MD MEDIAN	999999999	999999999	99999999	99999999	99999999	99999999	99999999	99999999	NA	NA	99999999
80-99% OF MSA/MD MEDIAN	999999999	999999999	99999999	99999999	99999999	99999999	99999999	99999999	NA	NA	99999999
100-119% OF MSA/MD MEDIAN	999999999	999999999	99999999	99999999	99999999	99999999	99999999	99999999	NA	NA	99999999
120% OR MORE OF MSA/MD MEDIAN	999999999	999999999	99999999	99999999	99999999	99999999	99999999	99999999	NA	NA	99999999
INCOME NOT AVAILABLE 6/	999999999	999999999	99999999	99999999	99999999	99999999	99999999	99999999	NA	NA	99999999
GENDER 19/											
MALE	999999999	999999999	99999999	99999999	99999999	99999999	99999999	99999999	NA	NA	99999999
FEMALE	999999999	999999999	99999999	99999999	99999999	99999999	99999999	99999999	NA	NA	99999999
JOINT (MALE/FEMALE)	999999999	999999999	99999999	99999999	99999999	99999999	99999999	99999999	NA	NA	99999999
GENDER NOT AVAILABLE 6/	999999999	999999999	99999999	99999999	99999999	99999999	99999999	99999999	NA	NA	99999999
CENSUS TRACT CHARACTERISTICS 10/											
RACIAL/ETHNIC COMPOSITION 11/											
LESS THAN 10% MINORITY	999999999	999999999	99999999	99999999	99999999	99999999	99999999	99999999	NA	NA	99999999
10-19% MINORITY	999999999	999999999	99999999	99999999	99999999	99999999	99999999	99999999	NA	NA	99999999
20-49% MINORITY	999999999	999999999	99999999	99999999	99999999	99999999	99999999	99999999	NA	NA	99999999
50-79% MINORITY	999999999	999999999	99999999	99999999	99999999	99999999	99999999	99999999	NA	NA	99999999
80-100% MINORITY	999999999	999999999	99999999	99999999	99999999	99999999	99999999	99999999	NA	NA	99999999
INCOME CHARACTERISTICS 12/ 13/											
LOW INCOME	999999999	999999999	99999999	99999999	99999999	99999999	99999999	99999999	NA	NA	99999999
MODERATE INCOME	999999999	999999999	99999999	99999999	99999999	99999999	99999999	99999999	NA	NA	99999999
MIDDLE INCOME	999999999	999999999	99999999	99999999	99999999	99999999	99999999	99999999	NA	NA	99999999
UPPER INCOME	999999999	999999999	99999999	99999999	99999999	99999999	99999999	99999999	NA	NA	99999999

TABLE 11-8: PRICING INFORMATION FOR CONVENTIONAL REFINANCING LOANS, JUNIOR LIEN, 1- TO 4-FAMILY OWNER-OCCUPIED DWELLING (EXCLUDES MANUFACTURED HOMES), BY BORROWER OR CENSUS TRACT CHARACTERISTICS, 2004

PAGE: 99999
RUN DATE: MM/DD/CCYY

INSTITUTION: XXXXXXXXXX-X XXXXXXXXXXXXXXXXXXXXXXXXXXXXXX

MSA/MD: 99999 - XXXXXXXXXXXXXXXXXXXXXXXXXXXXXXXXXXXXXXXX

BORROWER OR CENSUS TRACT CHARACTERISTICS	15/ NO REPORTED PRICING DATA #	REPORTED PRICING DATA #	PERCENTAGE POINTS ABOVE TREASURY:ONLY INCL. LOANS WITH APR ABOVE THE THRESHOLD 16/ 5 - 5.99 #	6 - 6.99 #	7 - 7.99 #	8 - 8.99 #	9 - 9.99 #	10 OR MORE #	MEAN	MEDIAN	HOEPA LOANS 17/ #
BORROWER CHARACTERISTICS											
RACE 5/											
AMERICAN INDIAN/ALASKA NATIVE	999999999	999999999	99999999	99999999	99999999	99999999	99999999	99999999	99.99	99.99	99999999
ASIAN	999999999	999999999	99999999	99999999	99999999	99999999	99999999	99999999	99.99	99.99	99999999
BLACK OR AFRICAN AMERICAN	999999999	999999999	99999999	99999999	99999999	99999999	99999999	99999999	99.99	99.99	99999999
NATIVE HAWAIIAN/OTHER PACIFIC ISLND	999999999	999999999	99999999	99999999	99999999	99999999	99999999	99999999	99.99	99.99	99999999
WHITE	999999999	999999999	99999999	99999999	99999999	99999999	99999999	99999999	99.99	99.99	99999999
2 OR MORE MINORITY RACES	999999999	999999999	99999999	99999999	99999999	99999999	99999999	99999999	99.99	99.99	99999999
JOINT (WHITE/MINORITY RACE)	999999999	999999999	99999999	99999999	99999999	99999999	99999999	99999999	99.99	99.99	99999999
RACE NOT AVAILABLE 6/	999999999	999999999	99999999	99999999	99999999	99999999	99999999	99999999	99.99	99.99	99999999
ETHNICITY 7/											
HISPANIC OR LATINO	999999999	999999999	99999999	99999999	99999999	99999999	99999999	99999999	99.99	99.99	99999999
NOT HISPANIC OR LATINO	999999999	999999999	99999999	99999999	99999999	99999999	99999999	99999999	99.99	99.99	99999999
JOINT (HISPANIC OR LATINO/ NOT HISPANIC OR LATINO)	999999999	999999999	99999999	99999999	99999999	99999999	99999999	99999999	99.99	99.99	99999999
ETHNICITY NOT AVAILABLE 6/	999999999	999999999	99999999	99999999	99999999	99999999	99999999	99999999	99.99	99.99	99999999
MINORITY STATUS 8/											
WHITE NON-HISPANIC	999999999	999999999	99999999	99999999	99999999	99999999	99999999	99999999	99.99	99.99	99999999
OTHERS, INCLUDING HISPANIC	999999999	999999999	99999999	99999999	99999999	99999999	99999999	99999999	99.99	99.99	99999999
INCOME 9/											
LESS THAN 50% OF MSA/MD MEDIAN	999999999	999999999	99999999	99999999	99999999	99999999	99999999	99999999	99.99	99.99	99999999
50-79% OF MSA/MD MEDIAN	999999999	999999999	99999999	99999999	99999999	99999999	99999999	99999999	99.99	99.99	99999999
80-99% OF MSA/MD MEDIAN	999999999	999999999	99999999	99999999	99999999	99999999	99999999	99999999	99.99	99.99	99999999
100-119% OF MSA/MD MEDIAN	999999999	999999999	99999999	99999999	99999999	99999999	99999999	99999999	99.99	99.99	99999999
120% OR MORE OF MSA/MD MEDIAN	999999999	999999999	99999999	99999999	99999999	99999999	99999999	99999999	99.99	99.99	99999999
INCOME NOT AVAILABLE 6/	999999999	999999999	99999999	99999999	99999999	99999999	99999999	99999999	99.99	99.99	99999999
GENDER 19/											
MALE	999999999	999999999	99999999	99999999	99999999	99999999	99999999	99999999	99.99	99.99	99999999
FEMALE	999999999	999999999	99999999	99999999	99999999	99999999	99999999	99999999	99.99	99.99	99999999
JOINT (MALE/FEMALE)	999999999	999999999	99999999	99999999	99999999	99999999	99999999	99999999	99.99	99.99	99999999
GENDER NOT AVAILABLE 6/	999999999	999999999	99999999	99999999	99999999	99999999	99999999	99999999	99.99	99.99	99999999
CENSUS TRACT CHARACTERISTICS 10/											
RACIAL/ETHNIC COMPOSITION 11/											
LESS THAN 10% MINORITY	999999999	999999999	99999999	99999999	99999999	99999999	99999999	99999999	99.99	99.99	99999999
10-19% MINORITY	999999999	999999999	99999999	99999999	99999999	99999999	99999999	99999999	99.99	99.99	99999999
20-49% MINORITY	999999999	999999999	99999999	99999999	99999999	99999999	99999999	99999999	99.99	99.99	99999999
50-79% MINORITY	999999999	999999999	99999999	99999999	99999999	99999999	99999999	99999999	99.99	99.99	99999999
80-100% MINORITY	999999999	999999999	99999999	99999999	99999999	99999999	99999999	99999999	99.99	99.99	99999999
INCOME CHARACTERISTICS 12/ 13/											
LOW INCOME	999999999	999999999	99999999	99999999	99999999	99999999	99999999	99999999	99.99	99.99	99999999
MODERATE INCOME	999999999	999999999	99999999	99999999	99999999	99999999	99999999	99999999	99.99	99.99	99999999
MIDDLE INCOME	999999999	999999999	99999999	99999999	99999999	99999999	99999999	99999999	99.99	99.99	99999999
UPPER INCOME	999999999	999999999	99999999	99999999	99999999	99999999	99999999	99999999	99.99	99.99	99999999

TABLE 11-8: PRICING INFORMATION FOR CONVENTIONAL REFINANCING LOANS, JUNIOR LIEN, 1- TO 4-FAMILY OWNER-OCCUPIED DWELLING (EXCLUDES MANUFACTURED HOMES), BY BORROWER OR CENSUS TRACT CHARACTERISTICS, 2004

PAGE: 99999
RUN DATE: MM/DD/CCYY

INSTITUTION: XXXXXXXXXX-X XXXXXXXXXXXXXXXXXXXXXXXXXXXXXX

MSA/MD: 99999 - XXXXXXXXXXXXXXXXXXXXXXXXXXXXXXXXXXXXXXXX

BORROWER OR CENSUS TRACT CHARACTERISTICS	15/ NO REPORTED PRICING DATA $000'S	REPORTED PRICING DATA $000'S	PERCENTAGE POINTS ABOVE TREASURY:ONLY INCL. LOANS WITH APR ABOVE THE THRESHOLD 16/ 5 - 5.99 $000'S	6 - 6.99 $000'S	7 - 7.99 $000'S	8 - 8.99 $000'S	9 - 9.99 $000'S	10 OR MORE $000'S	MEAN	MEDIAN	HOEPA LOANS 17/ $000'S
BORROWER CHARACTERISTICS											
RACE 5/											
AMERICAN INDIAN/ALASKA NATIVE	999999999	999999999	99999999	99999999	99999999	99999999	99999999	99999999	NA	NA	99999999
ASIAN	999999999	999999999	99999999	99999999	99999999	99999999	99999999	99999999	NA	NA	99999999
BLACK OR AFRICAN AMERICAN	999999999	999999999	99999999	99999999	99999999	99999999	99999999	99999999	NA	NA	99999999
NATIVE HAWAIIAN/OTHER PACIFIC ISLND	999999999	999999999	99999999	99999999	99999999	99999999	99999999	99999999	NA	NA	99999999
WHITE	999999999	999999999	99999999	99999999	99999999	99999999	99999999	99999999	NA	NA	99999999
2 OR MORE MINORITY RACES	999999999	999999999	99999999	99999999	99999999	99999999	99999999	99999999	NA	NA	99999999
JOINT (WHITE/MINORITY RACE)	999999999	999999999	99999999	99999999	99999999	99999999	99999999	99999999	NA	NA	99999999
RACE NOT AVAILABLE 6/	999999999	999999999	99999999	99999999	99999999	99999999	99999999	99999999	NA	NA	99999999
ETHNICITY 7/											
HISPANIC OR LATINO	999999999	999999999	99999999	99999999	99999999	99999999	99999999	99999999	NA	NA	99999999
NOT HISPANIC OR LATINO	999999999	999999999	99999999	99999999	99999999	99999999	99999999	99999999	NA	NA	99999999
JOINT (HISPANIC OR LATINO/ NOT HISPANIC OR LATINO)	999999999	999999999	99999999	99999999	99999999	99999999	99999999	99999999	NA	NA	99999999
ETHNICITY NOT AVAILABLE 6/	999999999	999999999	99999999	99999999	99999999	99999999	99999999	99999999	NA	NA	99999999
MINORITY STATUS 8/											
WHITE NON-HISPANIC	999999999	999999999	99999999	99999999	99999999	99999999	99999999	99999999	NA	NA	99999999
OTHERS, INCLUDING HISPANIC	999999999	999999999	99999999	99999999	99999999	99999999	99999999	99999999	NA	NA	99999999
INCOME 9/											
LESS THAN 50% OF MSA/MD MEDIAN	999999999	999999999	99999999	99999999	99999999	99999999	99999999	99999999	NA	NA	99999999
50-79% OF MSA/MD MEDIAN	999999999	999999999	99999999	99999999	99999999	99999999	99999999	99999999	NA	NA	99999999
80-99% OF MSA/MD MEDIAN	999999999	999999999	99999999	99999999	99999999	99999999	99999999	99999999	NA	NA	99999999
100-119% OF MSA/MD MEDIAN	999999999	999999999	99999999	99999999	99999999	99999999	99999999	99999999	NA	NA	99999999
120% OR MORE OF MSA/MD MEDIAN	999999999	999999999	99999999	99999999	99999999	99999999	99999999	99999999	NA	NA	99999999
INCOME NOT AVAILABLE 6/	999999999	999999999	99999999	99999999	99999999	99999999	99999999	99999999	NA	NA	99999999
GENDER 19/											
MALE	999999999	999999999	99999999	99999999	99999999	99999999	99999999	99999999	NA	NA	99999999
FEMALE	999999999	999999999	99999999	99999999	99999999	99999999	99999999	99999999	NA	NA	99999999
JOINT (MALE/FEMALE)	999999999	999999999	99999999	99999999	99999999	99999999	99999999	99999999	NA	NA	99999999
GENDER NOT AVAILABLE 6/	999999999	999999999	99999999	99999999	99999999	99999999	99999999	99999999	NA	NA	99999999
CENSUS TRACT CHARACTERISTICS 10/											
RACIAL/ETHNIC COMPOSITION 11/											
LESS THAN 10% MINORITY	999999999	999999999	99999999	99999999	99999999	99999999	99999999	99999999	NA	NA	99999999
10-19% MINORITY	999999999	999999999	99999999	99999999	99999999	99999999	99999999	99999999	NA	NA	99999999
20-49% MINORITY	999999999	999999999	99999999	99999999	99999999	99999999	99999999	99999999	NA	NA	99999999
50-79% MINORITY	999999999	999999999	99999999	99999999	99999999	99999999	99999999	99999999	NA	NA	99999999
80-100% MINORITY	999999999	999999999	99999999	99999999	99999999	99999999	99999999	99999999	NA	NA	99999999
INCOME CHARACTERISTICS 12/ 13/											
LOW INCOME	999999999	999999999	99999999	99999999	99999999	99999999	99999999	99999999	NA	NA	99999999
MODERATE INCOME	999999999	999999999	99999999	99999999	99999999	99999999	99999999	99999999	NA	NA	99999999
MIDDLE INCOME	999999999	999999999	99999999	99999999	99999999	99999999	99999999	99999999	NA	NA	99999999
UPPER INCOME	999999999	999999999	99999999	99999999	99999999	99999999	99999999	99999999	NA	NA	99999999

TABLE 11-9: PRICING INFORMATION FOR CONVENTIONAL HOME IMPROVEMENT LOANS, FIRST LIEN, 1- TO 4-FAMILY OWNER-OCCUPIED DWELLING (EXCLUDES MANUFACTURED HOMES), BY BORROWER OR CENSUS TRACT CHARACTERISTICS, 2004

PAGE: 99999
RUN DATE: MM/DD/CCYY

INSTITUTION: XXXXXXXXXX-X XXXXXXXXXXXXXXXXXXXXXXXXXXXXXX

MSA/MD: 99999 - XXXXXXXXXXXXXXXXXXXXXXXXXXXXXXXXXXXXXXXX

BORROWER OR CENSUS TRACT CHARACTERISTICS	15/ NO REPORTED PRICING DATA #	REPORTED PRICING DATA #	PERCENTAGE POINTS ABOVE TREASURY:ONLY INCL. LOANS WITH APR ABOVE THE THRESHOLD 16/ 3 - 3.99 #	4 - 4.99 #	5 - 5.99 #	6 - 6.99 #	7 - 7.99 #	8 OR MORE #	MEAN	MEDIAN	HOEPA LOANS 17/ #
BORROWER CHARACTERISTICS											
RACE 5/											
AMERICAN INDIAN/ALASKA NATIVE	999999999	999999999	99999999	99999999	99999999	99999999	99999999	99999999	99.99	99.99	99999999
ASIAN	999999999	999999999	99999999	99999999	99999999	99999999	99999999	99999999	99.99	99.99	99999999
BLACK OR AFRICAN AMERICAN	999999999	999999999	99999999	99999999	99999999	99999999	99999999	99999999	99.99	99.99	99999999
NATIVE HAWAIIAN/OTHER PACIFIC ISLND	999999999	999999999	99999999	99999999	99999999	99999999	99999999	99999999	99.99	99.99	99999999
WHITE	999999999	999999999	99999999	99999999	99999999	99999999	99999999	99999999	99.99	99.99	99999999
2 OR MORE MINORITY RACES	999999999	999999999	99999999	99999999	99999999	99999999	99999999	99999999	99.99	99.99	99999999
JOINT (WHITE/MINORITY RACE)	999999999	999999999	99999999	99999999	99999999	99999999	99999999	99999999	99.99	99.99	99999999
RACE NOT AVAILABLE 6/	999999999	999999999	99999999	99999999	99999999	99999999	99999999	99999999	99.99	99.99	99999999
ETHNICITY 7/											
HISPANIC OR LATINO	999999999	999999999	99999999	99999999	99999999	99999999	99999999	99999999	99.99	99.99	99999999
NOT HISPANIC OR LATINO	999999999	999999999	99999999	99999999	99999999	99999999	99999999	99999999	99.99	99.99	99999999
JOINT (HISPANIC OR LATINO/ NOT HISPANIC OR LATINO)	999999999	999999999	99999999	99999999	99999999	99999999	99999999	99999999	99.99	99.99	99999999
ETHNICITY NOT AVAILABLE 6/	999999999	999999999	99999999	99999999	99999999	99999999	99999999	99999999	99.99	99.99	99999999
MINORITY STATUS 8/											
WHITE NON-HISPANIC	999999999	999999999	99999999	99999999	99999999	99999999	99999999	99999999	99.99	99.99	99999999
OTHERS, INCLUDING HISPANIC	999999999	999999999	99999999	99999999	99999999	99999999	99999999	99999999	99.99	99.99	99999999
INCOME 9/											
LESS THAN 50% OF MSA/MD MEDIAN	999999999	999999999	99999999	99999999	99999999	99999999	99999999	99999999	99.99	99.99	99999999
50-79% OF MSA/MD MEDIAN	999999999	999999999	99999999	99999999	99999999	99999999	99999999	99999999	99.99	99.99	99999999
80-99% OF MSA/MD MEDIAN	999999999	999999999	99999999	99999999	99999999	99999999	99999999	99999999	99.99	99.99	99999999
100-119% OF MSA/MD MEDIAN	999999999	999999999	99999999	99999999	99999999	99999999	99999999	99999999	99.99	99.99	99999999
120% OR MORE OF MSA/MD MEDIAN	999999999	999999999	99999999	99999999	99999999	99999999	99999999	99999999	99.99	99.99	99999999
INCOME NOT AVAILABLE 6/	999999999	999999999	99999999	99999999	99999999	99999999	99999999	99999999	99.99	99.99	99999999
GENDER 19/											
MALE	999999999	999999999	99999999	99999999	99999999	99999999	99999999	99999999	99.99	99.99	99999999
FEMALE	999999999	999999999	99999999	99999999	99999999	99999999	99999999	99999999	99.99	99.99	99999999
JOINT (MALE/FEMALE)	999999999	999999999	99999999	99999999	99999999	99999999	99999999	99999999	99.99	99.99	99999999
GENDER NOT AVAILABLE 6/	999999999	999999999	99999999	99999999	99999999	99999999	99999999	99999999	99.99	99.99	99999999
CENSUS TRACT CHARACTERISTICS 10/											
RACIAL/ETHNIC COMPOSITION 11/											
LESS THAN 10% MINORITY	999999999	999999999	99999999	99999999	99999999	99999999	99999999	99999999	99.99	99.99	99999999
10-19% MINORITY	999999999	999999999	99999999	99999999	99999999	99999999	99999999	99999999	99.99	99.99	99999999
20-49% MINORITY	999999999	999999999	99999999	99999999	99999999	99999999	99999999	99999999	99.99	99.99	99999999
50-79% MINORITY	999999999	999999999	99999999	99999999	99999999	99999999	99999999	99999999	99.99	99.99	99999999
80-100% MINORITY	999999999	999999999	99999999	99999999	99999999	99999999	99999999	99999999	99.99	99.99	99999999
INCOME CHARACTERISTICS 12/ 13/											
LOW INCOME	999999999	999999999	99999999	99999999	99999999	99999999	99999999	99999999	99.99	99.99	99999999
MODERATE INCOME	999999999	999999999	99999999	99999999	99999999	99999999	99999999	99999999	99.99	99.99	99999999
MIDDLE INCOME	999999999	999999999	99999999	99999999	99999999	99999999	99999999	99999999	99.99	99.99	99999999
UPPER INCOME	999999999	999999999	99999999	99999999	99999999	99999999	99999999	99999999	99.99	99.99	99999999

TABLE 11-9: PRICING INFORMATION FOR CONVENTIONAL HOME IMPROVEMENT LOANS, FIRST LIEN, 1- TO 4-FAMILY OWNER-OCCUPIED DWELLING (EXCLUDES MANUFACTURED HOMES), BY BORROWER OR CENSUS TRACT CHARACTERISTICS, 2004

PAGE: 99999
RUN DATE: MM/DD/CCYY

INSTITUTION: XXXXXXXXXX-X XXXXXXXXXXXXXXXXXXXXXXXXXXXXXX

MSA/MD: 99999 - XXXXXXXXXXXXXXXXXXXXXXXXXXXXXXXXXXXXXXXX

BORROWER OR CENSUS TRACT CHARACTERISTICS	15/ NO REPORTED PRICING DATA $000'S	REPORTED PRICING DATA $000'S	PERCENTAGE POINTS ABOVE TREASURY: ONLY INCL. LOANS WITH APR ABOVE THE THRESHOLD 16/ 3 - 3.99 $000'S	4 - 4.99 $000'S	5 - 5.99 $000'S	6 - 6.99 $000'S	7 - 7.99 $000'S	8 OR MORE $000'S	MEAN	MEDIAN	HOEPA LOANS 17/ $000'S
BORROWER CHARACTERISTICS											
RACE 5/											
AMERICAN INDIAN/ALASKA NATIVE	999999999	999999999	99999999	99999999	99999999	99999999	99999999	99999999	NA	NA	99999999
ASIAN	999999999	999999999	99999999	99999999	99999999	99999999	99999999	99999999	NA	NA	99999999
BLACK OR AFRICAN AMERICAN	999999999	999999999	99999999	99999999	99999999	99999999	99999999	99999999	NA	NA	99999999
NATIVE HAWAIIAN/OTHER PACIFIC ISLND	999999999	999999999	99999999	99999999	99999999	99999999	99999999	99999999	NA	NA	99999999
WHITE	999999999	999999999	99999999	99999999	99999999	99999999	99999999	99999999	NA	NA	99999999
2 OR MORE MINORITY RACES	999999999	999999999	99999999	99999999	99999999	99999999	99999999	99999999	NA	NA	99999999
JOINT (WHITE/MINORITY RACE)	999999999	999999999	99999999	99999999	99999999	99999999	99999999	99999999	NA	NA	99999999
RACE NOT AVAILABLE 6/	999999999	999999999	99999999	99999999	99999999	99999999	99999999	99999999	NA	NA	99999999
ETHNICITY 7/											
HISPANIC OR LATINO	999999999	999999999	99999999	99999999	99999999	99999999	99999999	99999999	NA	NA	99999999
NOT HISPANIC OR LATINO	999999999	999999999	99999999	99999999	99999999	99999999	99999999	99999999	NA	NA	99999999
JOINT (HISPANIC OR LATINO/ NOT HISPANIC OR LATINO)	999999999	999999999	99999999	99999999	99999999	99999999	99999999	99999999	NA	NA	99999999
ETHNICITY NOT AVAILABLE 6/	999999999	999999999	99999999	99999999	99999999	99999999	99999999	99999999	NA	NA	99999999
MINORITY STATUS 8/											
WHITE NON-HISPANIC	999999999	999999999	99999999	99999999	99999999	99999999	99999999	99999999	NA	NA	99999999
OTHERS, INCLUDING HISPANIC	999999999	999999999	99999999	99999999	99999999	99999999	99999999	99999999	NA	NA	99999999
INCOME 9/											
LESS THAN 50% OF MSA/MD MEDIAN	999999999	999999999	99999999	99999999	99999999	99999999	99999999	99999999	NA	NA	99999999
50-79% OF MSA/MD MEDIAN	999999999	999999999	99999999	99999999	99999999	99999999	99999999	99999999	NA	NA	99999999
80-99% OF MSA/MD MEDIAN	999999999	999999999	99999999	99999999	99999999	99999999	99999999	99999999	NA	NA	99999999
100-119% OF MSA/MD MEDIAN	999999999	999999999	99999999	99999999	99999999	99999999	99999999	99999999	NA	NA	99999999
120% OR MORE OF MSA/MD MEDIAN	999999999	999999999	99999999	99999999	99999999	99999999	99999999	99999999	NA	NA	99999999
INCOME NOT AVAILABLE 6/	999999999	999999999	99999999	99999999	99999999	99999999	99999999	99999999	NA	NA	99999999
GENDER 19/											
MALE	999999999	999999999	99999999	99999999	99999999	99999999	99999999	99999999	NA	NA	99999999
FEMALE	999999999	999999999	99999999	99999999	99999999	99999999	99999999	99999999	NA	NA	99999999
JOINT (MALE/FEMALE)	999999999	999999999	99999999	99999999	99999999	99999999	99999999	99999999	NA	NA	99999999
GENDER NOT AVAILABLE 6/	999999999	999999999	99999999	99999999	99999999	99999999	99999999	99999999	NA	NA	99999999
CENSUS TRACT CHARACTERISTICS 10/											
RACIAL/ETHNIC COMPOSITION 11/											
LESS THAN 10% MINORITY	999999999	999999999	99999999	99999999	99999999	99999999	99999999	99999999	NA	NA	99999999
10-19% MINORITY	999999999	999999999	99999999	99999999	99999999	99999999	99999999	99999999	NA	NA	99999999
20-49% MINORITY	999999999	999999999	99999999	99999999	99999999	99999999	99999999	99999999	NA	NA	99999999
50-79% MINORITY	999999999	999999999	99999999	99999999	99999999	99999999	99999999	99999999	NA	NA	99999999
80-100% MINORITY	999999999	999999999	99999999	99999999	99999999	99999999	99999999	99999999	NA	NA	99999999
INCOME CHARACTERISTICS 12/ 13/											
LOW INCOME	999999999	999999999	99999999	99999999	99999999	99999999	99999999	99999999	NA	NA	99999999
MODERATE INCOME	999999999	999999999	99999999	99999999	99999999	99999999	99999999	99999999	NA	NA	99999999
MIDDLE INCOME	999999999	999999999	99999999	99999999	99999999	99999999	99999999	99999999	NA	NA	99999999
UPPER INCOME	999999999	999999999	99999999	99999999	99999999	99999999	99999999	99999999	NA	NA	99999999

TABLE 11-10: PRICING INFORMATION FOR CONVENTIONAL HOME IMPROVEMENT LOANS, JUNIOR LIEN, 1- TO 4-FAMILY OWNER-OCCUPIED DWELLING (EXCLUDES MANUFACTURED HOMES), BY BORROWER OR CENSUS TRACT CHARACTERISTICS, 2004

PAGE: 99999
RUN DATE: MM/DD/CCYY

INSTITUTION: XXXXXXXXXX-X XXXXXXXXXXXXXXXXXXXXXXXXXXXXXX

MSA/MD: 99999 - XXXXXXXXXXXXXXXXXXXXXXXXXXXXXXXXXXXXXXXX

BORROWER OR CENSUS TRACT CHARACTERISTICS	15/ NO REPORTED PRICING DATA #	REPORTED PRICING DATA #	PERCENTAGE POINTS ABOVE TREASURY: ONLY INCL. LOANS WITH APR ABOVE THE THRESHOLD 16/ 5 - 5.99 #	6 - 6.99 #	7 - 7.99 #	8 - 8.99 #	9 - 9.99 #	10 OR MORE #	MEAN	MEDIAN	HOEPA LOANS 17/ #
BORROWER CHARACTERISTICS											
RACE 5/											
AMERICAN INDIAN/ALASKA NATIVE	999999999	999999999	99999999	99999999	99999999	99999999	99999999	99999999	99.99	99.99	99999999
ASIAN	999999999	999999999	99999999	99999999	99999999	99999999	99999999	99999999	99.99	99.99	99999999
BLACK OR AFRICAN AMERICAN	999999999	999999999	99999999	99999999	99999999	99999999	99999999	99999999	99.99	99.99	99999999
NATIVE HAWAIIAN/OTHER PACIFIC ISLND	999999999	999999999	99999999	99999999	99999999	99999999	99999999	99999999	99.99	99.99	99999999
WHITE	999999999	999999999	99999999	99999999	99999999	99999999	99999999	99999999	99.99	99.99	99999999
2 OR MORE MINORITY RACES	999999999	999999999	99999999	99999999	99999999	99999999	99999999	99999999	99.99	99.99	99999999
JOINT (WHITE/MINORITY RACE)	999999999	999999999	99999999	99999999	99999999	99999999	99999999	99999999	99.99	99.99	99999999
RACE NOT AVAILABLE 6/	999999999	999999999	99999999	99999999	99999999	99999999	99999999	99999999	99.99	99.99	99999999
ETHNICITY 7/											
HISPANIC OR LATINO	999999999	999999999	99999999	99999999	99999999	99999999	99999999	99999999	99.99	99.99	99999999
NOT HISPANIC OR LATINO	999999999	999999999	99999999	99999999	99999999	99999999	99999999	99999999	99.99	99.99	99999999
JOINT (HISPANIC OR LATINO/ NOT HISPANIC OR LATINO)	999999999	999999999	99999999	99999999	99999999	99999999	99999999	99999999	99.99	99.99	99999999
ETHNICITY NOT AVAILABLE 6/	999999999	999999999	99999999	99999999	99999999	99999999	99999999	99999999	99.99	99.99	99999999
MINORITY STATUS 8/											
WHITE NON-HISPANIC	999999999	999999999	99999999	99999999	99999999	99999999	99999999	99999999	99.99	99.99	99999999
OTHERS, INCLUDING HISPANIC	999999999	999999999	99999999	99999999	99999999	99999999	99999999	99999999	99.99	99.99	99999999
INCOME 9/											
LESS THAN 50% OF MSA/MD MEDIAN	999999999	999999999	99999999	99999999	99999999	99999999	99999999	99999999	99.99	99.99	99999999
50-79% OF MSA/MD MEDIAN	999999999	999999999	99999999	99999999	99999999	99999999	99999999	99999999	99.99	99.99	99999999
80-99% OF MSA/MD MEDIAN	999999999	999999999	99999999	99999999	99999999	99999999	99999999	99999999	99.99	99.99	99999999
100-119% OF MSA/MD MEDIAN	999999999	999999999	99999999	99999999	99999999	99999999	99999999	99999999	99.99	99.99	99999999
120% OR MORE OF MSA/MD MEDIAN	999999999	999999999	99999999	99999999	99999999	99999999	99999999	99999999	99.99	99.99	99999999
INCOME NOT AVAILABLE 6/	999999999	999999999	99999999	99999999	99999999	99999999	99999999	99999999	99.99	99.99	99999999
GENDER 19/											
MALE	999999999	999999999	99999999	99999999	99999999	99999999	99999999	99999999	99.99	99.99	99999999
FEMALE	999999999	999999999	99999999	99999999	99999999	99999999	99999999	99999999	99.99	99.99	99999999
JOINT (MALE/FEMALE)	999999999	999999999	99999999	99999999	99999999	99999999	99999999	99999999	99.99	99.99	99999999
GENDER NOT AVAILABLE 6/	999999999	999999999	99999999	99999999	99999999	99999999	99999999	99999999	99.99	99.99	99999999
CENSUS TRACT CHARACTERISTICS 10/											
RACIAL/ETHNIC COMPOSITION 11/											
LESS THAN 10% MINORITY	999999999	999999999	99999999	99999999	99999999	99999999	99999999	99999999	99.99	99.99	99999999
10-19% MINORITY	999999999	999999999	99999999	99999999	99999999	99999999	99999999	99999999	99.99	99.99	99999999
20-49% MINORITY	999999999	999999999	99999999	99999999	99999999	99999999	99999999	99999999	99.99	99.99	99999999
50-79% MINORITY	999999999	999999999	99999999	99999999	99999999	99999999	99999999	99999999	99.99	99.99	99999999
80-100% MINORITY	999999999	999999999	99999999	99999999	99999999	99999999	99999999	99999999	99.99	99.99	99999999
INCOME CHARACTERISTICS 12/ 13/											
LOW INCOME	999999999	999999999	99999999	99999999	99999999	99999999	99999999	99999999	99.99	99.99	99999999
MODERATE INCOME	999999999	999999999	99999999	99999999	99999999	99999999	99999999	99999999	99.99	99.99	99999999
MIDDLE INCOME	999999999	999999999	99999999	99999999	99999999	99999999	99999999	99999999	99.99	99.99	99999999
UPPER INCOME	999999999	999999999	99999999	99999999	99999999	99999999	99999999	99999999	99.99	99.99	99999999

TABLE 11-10: PRICING INFORMATION FOR CONVENTIONAL HOME IMPROVEMENT LOANS, JUNIOR LIEN, 1- TO 4-FAMILY OWNER-OCCUPIED DWELLING (EXCLUDES MANUFACTURED HOMES), BY BORROWER OR CENSUS TRACT CHARACTERISTICS, 2004

PAGE: 99999
RUN DATE: MM/DD/CCYY

INSTITUTION: XXXXXXXXXX-X XXXXXXXXXXXXXXXXXXXXXXXXXXXXXX

MSA/MD: 99999 - XXXXXXXXXXXXXXXXXXXXXXXXXXXXXXXXXXXXXXXX

BORROWER OR CENSUS TRACT CHARACTERISTICS	15/ NO REPORTED PRICING DATA $000'S	REPORTED PRICING DATA $000'S	PERCENTAGE POINTS ABOVE TREASURY: ONLY INCL. LOANS WITH APR ABOVE THE THRESHOLD 16/ 5 - 5.99 $000'S	6 - 6.99 $000'S	7 - 7.99 $000'S	8 - 8.99 $000'S	9 - 9.99 $000'S	10 OR MORE $000'S	MEAN	MEDIAN	HOEPA LOANS 17/ $000'S
BORROWER CHARACTERISTICS											
RACE 5/											
AMERICAN INDIAN/ALASKA NATIVE	999999999	999999999	99999999	99999999	99999999	99999999	99999999	99999999	NA	NA	99999999
ASIAN	999999999	999999999	99999999	99999999	99999999	99999999	99999999	99999999	NA	NA	99999999
BLACK OR AFRICAN AMERICAN	999999999	999999999	99999999	99999999	99999999	99999999	99999999	99999999	NA	NA	99999999
NATIVE HAWAIIAN/OTHER PACIFIC ISLND	999999999	999999999	99999999	99999999	99999999	99999999	99999999	99999999	NA	NA	99999999
WHITE	999999999	999999999	99999999	99999999	99999999	99999999	99999999	99999999	NA	NA	99999999
2 OR MORE MINORITY RACES	999999999	999999999	99999999	99999999	99999999	99999999	99999999	99999999	NA	NA	99999999
JOINT (WHITE/MINORITY RACE)	999999999	999999999	99999999	99999999	99999999	99999999	99999999	99999999	NA	NA	99999999
RACE NOT AVAILABLE 6/	999999999	999999999	99999999	99999999	99999999	99999999	99999999	99999999	NA	NA	99999999
ETHNICITY 7/											
HISPANIC OR LATINO	999999999	999999999	99999999	99999999	99999999	99999999	99999999	99999999	NA	NA	99999999
NOT HISPANIC OR LATINO	999999999	999999999	99999999	99999999	99999999	99999999	99999999	99999999	NA	NA	99999999
JOINT (HISPANIC OR LATINO/ NOT HISPANIC OR LATINO)	999999999	999999999	99999999	99999999	99999999	99999999	99999999	99999999	NA	NA	99999999
ETHNICITY NOT AVAILABLE 6/	999999999	999999999	99999999	99999999	99999999	99999999	99999999	99999999	NA	NA	99999999
MINORITY STATUS 8/											
WHITE NON-HISPANIC	999999999	999999999	99999999	99999999	99999999	99999999	99999999	99999999	NA	NA	99999999
OTHERS, INCLUDING HISPANIC	999999999	999999999	99999999	99999999	99999999	99999999	99999999	99999999	NA	NA	99999999
INCOME 9/											
LESS THAN 50% OF MSA/MD MEDIAN	999999999	999999999	99999999	99999999	99999999	99999999	99999999	99999999	NA	NA	99999999
50-79% OF MSA/MD MEDIAN	999999999	999999999	99999999	99999999	99999999	99999999	99999999	99999999	NA	NA	99999999
80-99% OF MSA/MD MEDIAN	999999999	999999999	99999999	99999999	99999999	99999999	99999999	99999999	NA	NA	99999999
100-119% OF MSA/MD MEDIAN	999999999	999999999	99999999	99999999	99999999	99999999	99999999	99999999	NA	NA	99999999
120% OR MORE OF MSA/MD MEDIAN	999999999	999999999	99999999	99999999	99999999	99999999	99999999	99999999	NA	NA	99999999
INCOME NOT AVAILABLE 6/	999999999	999999999	99999999	99999999	99999999	99999999	99999999	99999999	NA	NA	99999999
GENDER 19/											
MALE	999999999	999999999	99999999	99999999	99999999	99999999	99999999	99999999	NA	NA	99999999
FEMALE	999999999	999999999	99999999	99999999	99999999	99999999	99999999	99999999	NA	NA	99999999
JOINT (MALE/FEMALE)	999999999	999999999	99999999	99999999	99999999	99999999	99999999	99999999	NA	NA	99999999
GENDER NOT AVAILABLE 6/	999999999	999999999	99999999	99999999	99999999	99999999	99999999	99999999	NA	NA	99999999
CENSUS TRACT CHARACTERISTICS 10/											
RACIAL/ETHNIC COMPOSITION 11/											
LESS THAN 10% MINORITY	999999999	999999999	99999999	99999999	99999999	99999999	99999999	99999999	NA	NA	99999999
10-19% MINORITY	999999999	999999999	99999999	99999999	99999999	99999999	99999999	99999999	NA	NA	99999999
20-49% MINORITY	999999999	999999999	99999999	99999999	99999999	99999999	99999999	99999999	NA	NA	99999999
50-79% MINORITY	999999999	999999999	99999999	99999999	99999999	99999999	99999999	99999999	NA	NA	99999999
80-100% MINORITY	999999999	999999999	99999999	99999999	99999999	99999999	99999999	99999999	NA	NA	99999999
INCOME CHARACTERISTICS 12/ 13/											
LOW INCOME	999999999	999999999	99999999	99999999	99999999	99999999	99999999	99999999	NA	NA	99999999
MODERATE INCOME	999999999	999999999	99999999	99999999	99999999	99999999	99999999	99999999	NA	NA	99999999
MIDDLE INCOME	999999999	999999999	99999999	99999999	99999999	99999999	99999999	99999999	NA	NA	99999999
UPPER INCOME	999999999	999999999	99999999	99999999	99999999	99999999	99999999	99999999	NA	NA	99999999

TABLE 12-1: DISPOSITION OF APPLICATIONS FOR CONVENTIONAL MANUFACTURED HOME-PURCHASE LOANS, FIRST LIEN, OWNER OCCUPIED DWELLING, BY BORROWER OR CENSUS TRACT CHARACTERISTICS, 2004

PAGE: 99999
RUN DATE: MM/DD/CCYY

INSTITUTION: XXXXXXXXXX-X XXXXXXXXXXXXXXXXXXXXXXXXXXXXXX

MSA/MD: 99999 - XXXXXXXXXXXXXXXXXXXXXXXXXXXXXXXXXXXXXXXX

BORROWER OR CENSUS TRACT CHARACTERISTICS	APPLICATIONS RECEIVED 20/		LOANS ORIGINATED		APPS. APPROVED BUT NOT ACCEPTED		APPLICATIONS DENIED		APPLICATIONS WITHDRAWN		FILES CLOSED FOR INCOMPLETENESS	
	#	$000'S	#	$000'S	#	$000'S	#	$000'S	#	$000'S	#	$000'S
BORROWER CHARACTERISTICS												
RACE 5/												
AMERICAN INDIAN/ALASKA NATIVE	99999999	99999999	99999999	99999999	99999999	99999999	99999999	99999999	99999999	99999999	99999999	99999999
ASIAN	99999999	99999999	99999999	99999999	99999999	99999999	99999999	99999999	99999999	99999999	99999999	99999999
BLACK OR AFRICAN AMERICAN	99999999	99999999	99999999	99999999	99999999	99999999	99999999	99999999	99999999	99999999	99999999	99999999
NATIVE HAWAIIAN/OTHER PACIFIC ISLND	99999999	99999999	99999999	99999999	99999999	99999999	99999999	99999999	99999999	99999999	99999999	99999999
WHITE	99999999	99999999	99999999	99999999	99999999	99999999	99999999	99999999	99999999	99999999	99999999	99999999
2 OR MORE MINORITY RACES	99999999	99999999	99999999	99999999	99999999	99999999	99999999	99999999	99999999	99999999	99999999	99999999
JOINT (WHITE/MINORITY RACE)	99999999	99999999	99999999	99999999	99999999	99999999	99999999	99999999	99999999	99999999	99999999	99999999
RACE NOT AVAILABLE 6/	99999999	99999999	99999999	99999999	99999999	99999999	99999999	99999999	99999999	99999999	99999999	99999999
ETHNICITY 7/												
HISPANIC OR LATINO	99999999	99999999	99999999	99999999	99999999	99999999	99999999	99999999	99999999	99999999	99999999	99999999
NOT HISPANIC OR LATINO	99999999	99999999	99999999	99999999	99999999	99999999	99999999	99999999	99999999	99999999	99999999	99999999
JOINT (HISPANIC OR LATINO/	99999999	99999999	99999999	99999999	99999999	99999999	99999999	99999999	99999999	99999999	99999999	99999999
NOT HISPANIC OR LATINO)	99999999	99999999	99999999	99999999	99999999	99999999	99999999	99999999	99999999	99999999	99999999	99999999
ETHNICITY NOT AVAILABLE 6/	99999999	99999999	99999999	99999999	99999999	99999999	99999999	99999999	99999999	99999999	99999999	99999999
MINORITY STATUS 8/												
WHITE NON-HISPANIC	99999999	99999999	99999999	99999999	99999999	99999999	99999999	99999999	99999999	99999999	99999999	99999999
OTHERS, INCLUDING HISPANIC	99999999	99999999	99999999	99999999	99999999	99999999	99999999	99999999	99999999	99999999	99999999	99999999
INCOME 9/												
LESS THAN 50% OF MSA/MD MEDIAN	99999999	99999999	99999999	99999999	99999999	99999999	99999999	99999999	99999999	99999999	99999999	99999999
50-79% OF MSA/MD MEDIAN	99999999	99999999	99999999	99999999	99999999	99999999	99999999	99999999	99999999	99999999	99999999	99999999
80-99% OF MSA/MD MEDIAN	99999999	99999999	99999999	99999999	99999999	99999999	99999999	99999999	99999999	99999999	99999999	99999999
100-119% OF MSA/MD MEDIAN	99999999	99999999	99999999	99999999	99999999	99999999	99999999	99999999	99999999	99999999	99999999	99999999
120% OR MORE OF MSA/MD MEDIAN	99999999	99999999	99999999	99999999	99999999	99999999	99999999	99999999	99999999	99999999	99999999	99999999
INCOME NOT AVAILABLE 6/	99999999	99999999	99999999	99999999	99999999	99999999	99999999	99999999	99999999	99999999	99999999	99999999
GENDER 19/												
MALE	99999999	99999999	99999999	99999999	99999999	99999999	99999999	99999999	99999999	99999999	99999999	99999999
FEMALE	99999999	99999999	99999999	99999999	99999999	99999999	99999999	99999999	99999999	99999999	99999999	99999999
JOINT (MALE/FEMALE)	99999999	99999999	99999999	99999999	99999999	99999999	99999999	99999999	99999999	99999999	99999999	99999999
GENDER NOT AVAILABLE 6/	99999999	99999999	99999999	99999999	99999999	99999999	99999999	99999999	99999999	99999999	99999999	99999999
CENSUS TRACT CHARACTERISTICS 10/												
RACIAL/ETHNIC COMPOSITION 11/												
LESS THAN 10% MINORITY	99999999	99999999	99999999	99999999	99999999	99999999	99999999	99999999	99999999	99999999	99999999	99999999
10-19% MINORITY	99999999	99999999	99999999	99999999	99999999	99999999	99999999	99999999	99999999	99999999	99999999	99999999
20-49% MINORITY	99999999	99999999	99999999	99999999	99999999	99999999	99999999	99999999	99999999	99999999	99999999	99999999
50-79% MINORITY	99999999	99999999	99999999	99999999	99999999	99999999	99999999	99999999	99999999	99999999	99999999	99999999
80-100% MINORITY	99999999	99999999	99999999	99999999	99999999	99999999	99999999	99999999	99999999	99999999	99999999	99999999
INCOME CHARACTERISTICS 12/ 13/												
LOW INCOME	99999999	99999999	99999999	99999999	99999999	99999999	99999999	99999999	99999999	99999999	99999999	99999999
MODERATE INCOME	99999999	99999999	99999999	99999999	99999999	99999999	99999999	99999999	99999999	99999999	99999999	99999999
MIDDLE INCOME	99999999	99999999	99999999	99999999	99999999	99999999	99999999	99999999	99999999	99999999	99999999	99999999
UPPER INCOME	99999999	99999999	99999999	99999999	99999999	99999999	99999999	99999999	99999999	99999999	99999999	99999999

TABLE 12-2: PRICING INFORMATION FOR CONVENTIONAL MANUFACTURED HOME-PURCHASE LOANS, FIRST LIEN, OWNER OCCUPIED DWELLING, BY BORROWER OR CENSUS TRACT CHARACTERISTICS, 2004

PAGE: 99999
RUN DATE: MM/DD/CCYY

INSTITUTION: XXXXXXXXXX-X XXXXXXXXXXXXXXXXXXXXXXXXXXXXXX

MSA/MD: 99999 - XXXXXXXXXXXXXXXXXXXXXXXXXXXXXXXXXXXXXXXX

BORROWER OR CENSUS TRACT CHARACTERISTICS	15/ NO REPORTED PRICING DATA #	REPORTED PRICING DATA #	PERCENTAGE POINTS ABOVE TREASURY : ONLY INCLUDE LOANS WITH APR ABOVE THE THRESHOLD 16/ 3 - 3.99 #	4 -.4.99 #	5 - 5.99 #	6 - 6.99 #	7 - 7.99 #	8 - 9.99 #	10 OR MORE #	MEAN	MEDIAN
BORROWER CHARACTERISTICS											
RACE 5/											
AMERICAN INDIAN/ALASKA NATIVE	999999999	999999999	99999999	99999999	99999999	99999999	99999999	99999999	99999999	99.99	99.99
ASIAN	999999999	999999999	99999999	99999999	99999999	99999999	99999999	99999999	99999999	99.99	99.99
BLACK OR AFRICAN AMERICAN	999999999	999999999	99999999	99999999	99999999	99999999	99999999	99999999	99999999	99.99	99.99
NATIVE HAWAIIAN/OTHER PACIFIC ISLND	999999999	999999999	99999999	99999999	99999999	99999999	99999999	99999999	99999999	99.99	99.99
WHITE	999999999	999999999	99999999	99999999	99999999	99999999	99999999	99999999	99999999	99.99	99.99
2 OR MORE MINORITY RACES	999999999	999999999	99999999	99999999	99999999	99999999	99999999	99999999	99999999	99.99	99.99
JOINT (WHITE/MINORITY RACE)	999999999	999999999	99999999	99999999	99999999	99999999	99999999	99999999	99999999	99.99	99.99
RACE NOT AVAILABLE 6/	999999999	999999999	99999999	99999999	99999999	99999999	99999999	99999999	99999999	99.99	99.99
ETHNICITY 7/											
HISPANIC OR LATINO	999999999	999999999	99999999	99999999	99999999	99999999	99999999	99999999	99999999	99.99	99.99
NOT HISPANIC OR LATINO	999999999	999999999	99999999	99999999	99999999	99999999	99999999	99999999	99999999	99.99	99.99
JOINT (HISPANIC OR LATINO/ NOT HISPANIC OR LATINO)	999999999	999999999	99999999	99999999	99999999	99999999	99999999	99999999	99999999	99.99	99.99
ETHNICITY NOT AVAILABLE 6/	999999999	999999999	99999999	99999999	99999999	99999999	99999999	99999999	99999999	99.99	99.99
MINORITY STATUS 8/											
WHITE NON-HISPANIC	999999999	999999999	99999999	99999999	99999999	99999999	99999999	99999999	99999999	99.99	99.99
OTHERS, INCLUDING HISPANIC	999999999	999999999	99999999	99999999	99999999	99999999	99999999	99999999	99999999	99.99	99.99
INCOME 9/											
LESS THAN 50% OF MSA/MD MEDIAN	999999999	999999999	99999999	99999999	99999999	99999999	99999999	99999999	99999999	99.99	99.99
50-79% OF MSA/MD MEDIAN	999999999	999999999	99999999	99999999	99999999	99999999	99999999	99999999	99999999	99.99	99.99
80-99% OF MSA/MD MEDIAN	999999999	999999999	99999999	99999999	99999999	99999999	99999999	99999999	99999999	99.99	99.99
100-119% OF MSA/MD MEDIAN	999999999	999999999	99999999	99999999	99999999	99999999	99999999	99999999	99999999	99.99	99.99
120% OR MORE OF MSA/MD MEDIAN	999999999	999999999	99999999	99999999	99999999	99999999	99999999	99999999	99999999	99.99	99.99
INCOME NOT AVAILABLE 6/	999999999	999999999	99999999	99999999	99999999	99999999	99999999	99999999	99999999	99.99	99.99
GENDER 19/											
MALE	999999999	999999999	99999999	99999999	99999999	99999999	99999999	99999999	99999999	99.99	99.99
FEMALE	999999999	999999999	99999999	99999999	99999999	99999999	99999999	99999999	99999999	99.99	99.99
JOINT (MALE/FEMALE)	999999999	999999999	99999999	99999999	99999999	99999999	99999999	99999999	99999999	99.99	99.99
GENDER NOT AVAILABLE 6/	999999999	999999999	99999999	99999999	99999999	99999999	99999999	99999999	99999999	99.99	99.99
CENSUS TRACT CHARACTERISTICS 10/											
RACIAL/ETHNIC COMPOSITION 11/											
LESS THAN 10% MINORITY	999999999	999999999	99999999	99999999	99999999	99999999	99999999	99999999	99999999	99.99	99.99
10-19% MINORITY	999999999	999999999	99999999	99999999	99999999	99999999	99999999	99999999	99999999	99.99	99.99
20-49% MINORITY	999999999	999999999	99999999	99999999	99999999	99999999	99999999	99999999	99999999	99.99	99.99
50-79% MINORITY	999999999	999999999	99999999	99999999	99999999	99999999	99999999	99999999	99999999	99.99	99.99
80-100% MINORITY	999999999	999999999	99999999	99999999	99999999	99999999	99999999	99999999	99999999	99.99	99.99
INCOME CHARACTERISTICS 12/ 13/											
LOW INCOME	999999999	999999999	99999999	99999999	99999999	99999999	99999999	99999999	99999999	99.99	99.99
MODERATE INCOME	999999999	999999999	99999999	99999999	99999999	99999999	99999999	99999999	99999999	99.99	99.99
MIDDLE INCOME	999999999	999999999	99999999	99999999	99999999	99999999	99999999	99999999	99999999	99.99	99.99
UPPER INCOME	999999999	999999999	99999999	99999999	99999999	99999999	99999999	99999999	99999999	99.99	99.99

TABLE 12-2: PRICING INFORMATION FOR CONVENTIONAL MANUFACTURED HOME-PURCHASE LOANS, FIRST LIEN, OWNER OCCUPIED DWELLING, BY BORROWER OR CENSUS TRACT CHARACTERISTICS, 2004

PAGE: 99999
RUN DATE: MM/DD/CCYY

INSTITUTION: XXXXXXXXXX-X XXXXXXXXXXXXXXXXXXXXXXXXXXXXXX

MSA/MD: 99999 - XXXXXXXXXXXXXXXXXXXXXXXXXXXXXXXXXXXXXXXX

BORROWER OR CENSUS TRACT CHARACTERISTICS	15/ NO REPORTED PRICING DATA $000'S	REPORTED PRICING DATA $000'S	PERCENTAGE POINTS ABOVE TREASURY : ONLY INCLUDE LOANS WITH APR ABOVE THE THRESHOLD 16/								
			3 - 3.99 $000'S	4 -.4.99 $000'S	5 - 5.99 $000'S	6 - 6.99 $000'S	7 - 7.99 $000'S	8 - 9.99 $000'S	10 OR MORE $000'S	MEAN	MEDIAN
BORROWER CHARACTERISTICS											
RACE 5/											
AMERICAN INDIAN/ALASKA NATIVE	999999999	999999999	99999999	99999999	99999999	99999999	99999999	99999999	99999999	NA	NA
ASIAN	999999999	999999999	99999999	99999999	99999999	99999999	99999999	99999999	99999999	NA	NA
BLACK OR AFRICAN AMERICAN	999999999	999999999	99999999	99999999	99999999	99999999	99999999	99999999	99999999	NA	NA
NATIVE HAWAIIAN/OTHER PACIFIC ISLND	999999999	999999999	99999999	99999999	99999999	99999999	99999999	99999999	99999999	NA	NA
WHITE	999999999	999999999	99999999	99999999	99999999	99999999	99999999	99999999	99999999	NA	NA
2 OR MORE MINORITY RACES	999999999	999999999	99999999	99999999	99999999	99999999	99999999	99999999	99999999	NA	NA
JOINT (WHITE/MINORITY RACE)	999999999	999999999	99999999	99999999	99999999	99999999	99999999	99999999	99999999	NA	NA
RACE NOT AVAILABLE 6/	999999999	999999999	99999999	99999999	99999999	99999999	99999999	99999999	99999999	NA	NA
ETHNICITY 7/											
HISPANIC OR LATINO	999999999	999999999	99999999	99999999	99999999	99999999	99999999	99999999	99999999	NA	NA
NOT HISPANIC OR LATINO	999999999	999999999	99999999	99999999	99999999	99999999	99999999	99999999	99999999	NA	NA
JOINT (HISPANIC OR LATINO/ NOT HISPANIC OR LATINO)	999999999	999999999	99999999	99999999	99999999	99999999	99999999	99999999	99999999	NA	NA
ETHNICITY NOT AVAILABLE 6/	999999999	999999999	99999999	99999999	99999999	99999999	99999999	99999999	99999999	NA	NA
MINORITY STATUS 8/											
WHITE NON-HISPANIC	999999999	999999999	99999999	99999999	99999999	99999999	99999999	99999999	99999999	NA	NA
OTHERS, INCLUDING HISPANIC	999999999	999999999	99999999	99999999	99999999	99999999	99999999	99999999	99999999	NA	NA
INCOME 9/											
LESS THAN 50% OF MSA/MD MEDIAN	999999999	999999999	99999999	99999999	99999999	99999999	99999999	99999999	99999999	NA	NA
50-79% OF MSA/MD MEDIAN	999999999	999999999	99999999	99999999	99999999	99999999	99999999	99999999	99999999	NA	NA
80-99% OF MSA/MD MEDIAN	999999999	999999999	99999999	99999999	99999999	99999999	99999999	99999999	99999999	NA	NA
100-119% OF MSA/MD MEDIAN	999999999	999999999	99999999	99999999	99999999	99999999	99999999	99999999	99999999	NA	NA
120% OR MORE OF MSA/MD MEDIAN	999999999	999999999	99999999	99999999	99999999	99999999	99999999	99999999	99999999	NA	NA
INCOME NOT AVAILABLE 6/	999999999	999999999	99999999	99999999	99999999	99999999	99999999	99999999	99999999	NA	NA
GENDER 19/											
MALE	999999999	999999999	99999999	99999999	99999999	99999999	99999999	99999999	99999999	NA	NA
FEMALE	999999999	999999999	99999999	99999999	99999999	99999999	99999999	99999999	99999999	NA	NA
JOINT (MALE/FEMALE)	999999999	999999999	99999999	99999999	99999999	99999999	99999999	99999999	99999999	NA	NA
GENDER NOT AVAILABLE 6/	999999999	999999999	99999999	99999999	99999999	99999999	99999999	99999999	99999999	NA	NA
CENSUS TRACT CHARACTERISTICS 10/											
RACIAL/ETHNIC COMPOSITION 11/											
LESS THAN 10% MINORITY	999999999	999999999	99999999	99999999	99999999	99999999	99999999	99999999	99999999	NA	NA
10-19% MINORITY	999999999	999999999	99999999	99999999	99999999	99999999	99999999	99999999	99999999	NA	NA
20-49% MINORITY	999999999	999999999	99999999	99999999	99999999	99999999	99999999	99999999	99999999	NA	NA
50-79% MINORITY	999999999	999999999	99999999	99999999	99999999	99999999	99999999	99999999	99999999	NA	NA
80-100% MINORITY	999999999	999999999	99999999	99999999	99999999	99999999	99999999	99999999	99999999	NA	NA
INCOME CHARACTERISTICS 12/ 13/											
LOW INCOME	999999999	999999999	99999999	99999999	99999999	99999999	99999999	99999999	99999999	NA	NA
MODERATE INCOME	999999999	999999999	99999999	99999999	99999999	99999999	99999999	99999999	99999999	NA	NA
MIDDLE INCOME	999999999	999999999	99999999	99999999	99999999	99999999	99999999	99999999	99999999	NA	NA
UPPER INCOME	999999999	999999999	99999999	99999999	99999999	99999999	99999999	99999999	99999999	NA	NA

SUMMARY TABLE A-1: DISPOSITION OF APPLICATIONS AND LOAN SALES BY LOAN TYPE, 1- TO 4-FAMILIES (EXCLUDES MANUFACTURED HOMES), 2004 PAGE: 99999
RUN DATE: MM/DD/CCYY

INSTITUTION: XXXXXXXXXX-X XXXXXXXXXXXXXXXXXXXXXXXXXXXXXX MSA/MD: 99999 - XXXXXXXXXXXXXXXXXXXXXXXXXXXXXXXXXXXXXXXX

LOAN TYPE	HOME PURCHASE		REFINANCE		HOME IMPROVEMENT		
	FIRST LIEN	JUNIOR LIEN	FIRST LIEN	JUNIOR LIEN	FIRST LIEN	JUNIOR LIEN	NO LIEN
TOTAL APPLICATIONS 28/							
CONVENTIONAL	999999999	999999999	999999999	999999999	999999999	999999999	999999999
FHA	999999999	999999999	999999999	999999999	999999999	999999999	999999999
VA	999999999	999999999	999999999	999999999	999999999	999999999	999999999
FSA/RHS	999999999	999999999	999999999	999999999	999999999	999999999	999999999
LOANS ORIGINATED							
CONVENTIONAL	999999999	999999999	999999999	999999999	999999999	999999999	999999999
FHA	999999999	999999999	999999999	999999999	999999999	999999999	999999999
VA	999999999	999999999	999999999	999999999	999999999	999999999	999999999
FSA/RHS	999999999	999999999	999999999	999999999	999999999	999999999	999999999
APPLICATIONS APPROVED BUT NOT ACCEPTED							
CONVENTIONAL	999999999	999999999	999999999	999999999	999999999	999999999	999999999
FHA	999999999	999999999	999999999	999999999	999999999	999999999	999999999
VA	999999999	999999999	999999999	999999999	999999999	999999999	999999999
FSA/RHS	999999999	999999999	999999999	999999999	999999999	999999999	999999999
APPLICATIONS DENIED							
CONVENTIONAL	999999999	999999999	999999999	999999999	999999999	999999999	999999999
FHA	999999999	999999999	999999999	999999999	999999999	999999999	999999999
VA	999999999	999999999	999999999	999999999	999999999	999999999	999999999
FSA/RHS	999999999	999999999	999999999	999999999	999999999	999999999	999999999
APPLICATIONS WITHDRAWN							
CONVENTIONAL	999999999	999999999	999999999	999999999	999999999	999999999	999999999
FHA	999999999	999999999	999999999	999999999	999999999	999999999	999999999
VA	999999999	999999999	999999999	999999999	999999999	999999999	999999999
FSA/RHS	999999999	999999999	999999999	999999999	999999999	999999999	999999999
FILES CLOSED FOR INCOMPLETENESS							
CONVENTIONAL	999999999	999999999	999999999	999999999	999999999	999999999	999999999
FHA	999999999	999999999	999999999	999999999	999999999	999999999	999999999
VA	999999999	999999999	999999999	999999999	999999999	999999999	999999999
FSA/RHS	999999999	999999999	999999999	999999999	999999999	999999999	999999999

SUMMARY TABLE A-1: DISPOSITION OF APPLICATIONS AND LOAN SALES BY LOAN TYPE, 1- TO 4-FAMILIES (EXCLUDES MANUFACTURED HOMES), 2004 PAGE: 99999
RUN DATE: MM/DD/CCYY

INSTITUTION: XXXXXXXXXX-X XXXXXXXXXXXXXXXXXXXXXXXXXXXXXX MSA/MD: 99999 - XXXXXXXXXXXXXXXXXXXXXXXXXXXXXXXXXXXXXXXX

LOAN TYPE	HOME PURCHASE		REFINANCE		HOME IMPROVEMENT		
	FIRST LIEN	JUNIOR LIEN	FIRST LIEN	JUNIOR LIEN	FIRST LIEN	JUNIOR LIEN	NO LIEN
MEMO ITEM: SUBSET OF LOANS ORIGINATED							
PREAPPROVALS RESULTING IN ORIGINATIONS							
CONVENTIONAL	999999999	999999999	NA	NA	NA	NA	NA
FHA	999999999	999999999	NA	NA	NA	NA	NA
VA	999999999	999999999	NA	NA	NA	NA	NA
FSA/RHS	999999999	999999999	NA	NA	NA	NA	NA
LOANS SOLD							
CONVENTIONAL	999999999	999999999	999999999	999999999	999999999	999999999	999999999
FHA	999999999	999999999	999999999	999999999	999999999	999999999	999999999
VA	999999999	999999999	999999999	999999999	999999999	999999999	999999999
FSA/RHS	999999999	999999999	999999999	999999999	999999999	999999999	999999999

SUMMARY TABLE A-2: DISPOSITION OF APPLICATIONS AND LOAN SALES BY LOAN TYPE, MANUFACTURED HOME, 2004

PAGE: 99999
RUN DATE: MM/DD/CCYY

INSTITUTION: XXXXXXXXXX-X XXXXXXXXXXXXXXXXXXXXXXXXXXXXXX

MSA/MD: 99999 - XXXXXXXXXXXXXXXXXXXXXXXXXXXXXXXXXXXXXXXX

LOAN TYPE	HOME PURCHASE		REFINANCE		HOME IMPROVEMENT		
	FIRST LIEN	JUNIOR LIEN	FIRST LIEN	JUNIOR LIEN	FIRST LIEN	JUNIOR LIEN	NO LIEN
TOTAL APPLICATIONS 28/							
CONVENTIONAL	999999999	999999999	999999999	999999999	999999999	999999999	999999999
FHA	999999999	999999999	999999999	999999999	999999999	999999999	999999999
VA	999999999	999999999	999999999	999999999	999999999	999999999	999999999
FSA/RHS	999999999	999999999	999999999	999999999	999999999	999999999	999999999
LOANS ORIGINATED							
CONVENTIONAL	999999999	999999999	999999999	999999999	999999999	999999999	999999999
FHA	999999999	999999999	999999999	999999999	999999999	999999999	999999999
VA	999999999	999999999	999999999	999999999	999999999	999999999	999999999
FSA/RHS	999999999	999999999	999999999	999999999	999999999	999999999	999999999
APPLICATIONS APPROVED BUT NOT ACCEPTED							
CONVENTIONAL	999999999	999999999	999999999	999999999	999999999	999999999	999999999
FHA	999999999	999999999	999999999	999999999	999999999	999999999	999999999
VA	999999999	999999999	999999999	999999999	999999999	999999999	999999999
FSA/RHS	999999999	999999999	999999999	999999999	999999999	999999999	999999999
APPLICATIONS DENIED							
CONVENTIONAL	999999999	999999999	999999999	999999999	999999999	999999999	999999999
FHA	999999999	999999999	999999999	999999999	999999999	999999999	999999999
VA	999999999	999999999	999999999	999999999	999999999	999999999	999999999
FSA/RHS	999999999	999999999	999999999	999999999	999999999	999999999	999999999
APPLICATIONS WITHDRAWN							
CONVENTIONAL	999999999	999999999	999999999	999999999	999999999	999999999	999999999
FHA	999999999	999999999	999999999	999999999	999999999	999999999	999999999
VA	999999999	999999999	999999999	999999999	999999999	999999999	999999999
FSA/RHS	999999999	999999999	999999999	999999999	999999999	999999999	999999999
FILES CLOSED FOR INCOMPLETENESS							
CONVENTIONAL	999999999	999999999	999999999	999999999	999999999	999999999	999999999
FHA	999999999	999999999	999999999	999999999	999999999	999999999	999999999
VA	999999999	999999999	999999999	999999999	999999999	999999999	999999999
FSA/RHS	999999999	999999999	999999999	999999999	999999999	999999999	999999999

SUMMARY TABLE A-2: DISPOSITION OF APPLICATIONS AND LOAN SALES BY LOAN TYPE, MANUFACTURED HOME, 2004

PAGE: 99999
RUN DATE: MM/DD/CCYY

INSTITUTION: XXXXXXXXXX-X XXXXXXXXXXXXXXXXXXXXXXXXXXXXXX

MSA/MD: 99999 - XXXXXXXXXXXXXXXXXXXXXXXXXXXXXXXXXXXXXXXX

LOAN TYPE	HOME PURCHASE		REFINANCE		HOME IMPROVEMENT		
	FIRST LIEN	JUNIOR LIEN	FIRST LIEN	JUNIOR LIEN	FIRST LIEN	JUNIOR LIEN	NO LIEN
MEMO ITEM: SUBSET OF LOANS ORIGINATED							
PREAPPROVALS RESULTING IN ORIGINATIONS							
CONVENTIONAL	999999999	999999999	NA	NA	NA	NA	NA
FHA	999999999	999999999	NA	NA	NA	NA	NA
VA	999999999	999999999	NA	NA	NA	NA	NA
FSA/RHS	999999999	999999999	NA	NA	NA	NA	NA
LOANS SOLD							
CONVENTIONAL	999999999	999999999	999999999	999999999	999999999	999999999	999999999
FHA	999999999	999999999	999999999	999999999	999999999	999999999	999999999
VA	999999999	999999999	999999999	999999999	999999999	999999999	999999999
FSA/RHS	999999999	999999999	999999999	999999999	999999999	999999999	999999999

SUMMARY TABLE A-3: DISPOSITION OF APPLICATIONS AND LOAN SALES BY LOAN TYPE, MULTIFAMILY, 2004

PAGE: 99999
RUN DATE: MM/DD/CCYY

INSTITUTION: XXXXXXXXXX-X XXXXXXXXXXXXXXXXXXXXXXXXXXXXXX

MSA/MD: 99999 - XXXXXXXXXXXXXXXXXXXXXXXXXXXXXXXXXXXXXXXX

LOAN TYPE	HOME PURCHASE		REFINANCE		HOME IMPROVEMENT		
	FIRST LIEN	JUNIOR LIEN	FIRST LIEN	JUNIOR LIEN	FIRST LIEN	JUNIOR LIEN	NO LIEN
TOTAL APPLICATIONS 28/							
CONVENTIONAL	999999999	999999999	999999999	999999999	999999999	999999999	999999999
FHA	999999999	999999999	999999999	999999999	999999999	999999999	999999999
VA	999999999	999999999	999999999	999999999	999999999	999999999	999999999
FSA/RHS	999999999	999999999	999999999	999999999	999999999	999999999	999999999
LOANS ORIGINATED							
CONVENTIONAL	999999999	999999999	999999999	999999999	999999999	999999999	999999999
FHA	999999999	999999999	999999999	999999999	999999999	999999999	999999999
VA	999999999	999999999	999999999	999999999	999999999	999999999	999999999
FSA/RHS	999999999	999999999	999999999	999999999	999999999	999999999	999999999
APPLICATIONS APPROVED BUT NOT ACCEPTED							
CONVENTIONAL	999999999	999999999	999999999	999999999	999999999	999999999	999999999
FHA	999999999	999999999	999999999	999999999	999999999	999999999	999999999
VA	999999999	999999999	999999999	999999999	999999999	999999999	999999999
FSA/RHS	999999999	999999999	999999999	999999999	999999999	999999999	999999999
APPLICATIONS DENIED							
CONVENTIONAL	999999999	999999999	999999999	999999999	999999999	999999999	999999999
FHA	999999999	999999999	999999999	999999999	999999999	999999999	999999999
VA	999999999	999999999	999999999	999999999	999999999	999999999	999999999
FSA/RHS	999999999	999999999	999999999	999999999	999999999	999999999	999999999
APPLICATIONS WITHDRAWN							
CONVENTIONAL	999999999	999999999	999999999	999999999	999999999	999999999	999999999
FHA	999999999	999999999	999999999	999999999	999999999	999999999	999999999
VA	999999999	999999999	999999999	999999999	999999999	999999999	999999999
FSA/RHS	999999999	999999999	999999999	999999999	999999999	999999999	999999999
FILES CLOSED FOR INCOMPLETENESS							
CONVENTIONAL	999999999	999999999	999999999	999999999	999999999	999999999	999999999
FHA	999999999	999999999	999999999	999999999	999999999	999999999	999999999
VA	999999999	999999999	999999999	999999999	999999999	999999999	999999999
FSA/RHS	999999999	999999999	999999999	999999999	999999999	999999999	999999999
MEMO ITEM: SUBSET OF LOANS ORIGINATED							
LOANS SOLD							
CONVENTIONAL	999999999	999999999	999999999	999999999	999999999	999999999	999999999
FHA	999999999	999999999	999999999	999999999	999999999	999999999	999999999
VA	999999999	999999999	999999999	999999999	999999999	999999999	999999999
FSA/RHS	999999999	999999999	999999999	999999999	999999999	999999999	999999999

SUMMARY TABLE A-4: DISPOSITION OF PREAPPROVALS FOR CONVENTIONAL HOME-PURCHASE LOANS, FIRST LIEN, 1- TO 4-FAMILY DWELLINGS (EXCLUDES MANUFACTURED HOMES), BY BORROWER OR CENSUS TRACT CHARACTERISTICS, 2004

PAGE: 99999
RUN DATE: MM/DD/CCYY

INSTITUTION: XXXXXXXXXX-X XXXXXXXXXXXXXXXXXXXXXXXXXXXXXX

MSA/MD: 99999 - XXXXXXXXXXXXXXXXXXXXXXXXXXXXXXXXXXXXXXXX

BORROWER OR CENSUS TRACT CHARACTERISTICS	PREAPPROVALS RESULTING IN ORIGINATIONS		PREAPPROVALS APPROVED BUT NOT ACCEPTED 29/		PREAPPROVALS DENIED	
	#	$000'S	#	$000'S	#	$000'S
BORROWER CHARACTERISTICS						
RACE 5/						
AMERICAN INDIAN/ALASKA NATIVE	99999999	99999999	NA	NA	NA	NA
ASIAN	99999999	99999999	NA	NA	NA	NA
BLACK OR AFRICAN AMERICAN	99999999	99999999	NA	NA	NA	NA
NATIVE HAWAIIAN/OTHER PACIFIC ISLND	99999999	99999999	NA	NA	NA	NA
WHITE	99999999	99999999	NA	NA	NA	NA
2 OR MORE MINORITY RACES	99999999	99999999	NA	NA	NA	NA
JOINT (WHITE/MINORITY RACE)	99999999	99999999	NA	NA	NA	NA
RACE NOT AVAILABLE 6/	99999999	99999999	NA	NA	NA	NA
ETHNICITY 7/						
HISPANIC OR LATINO	99999999	99999999	NA	NA	NA	NA
NOT HISPANIC OR LATINO	99999999	99999999	NA	NA	NA	NA
JOINT (HISPANIC OR LATINO/	99999999	99999999	NA	NA	NA	NA
NOT HISPANIC OR LATINO)	99999999	99999999	NA	NA	NA	NA
ETHNICITY NOT AVAILABLE 6/	99999999	99999999	NA	NA	NA	NA
MINORITY STATUS 8/						
WHITE NON-HISPANIC	99999999	99999999	NA	NA	NA	NA
OTHERS, INCLUDING HISPANIC	99999999	99999999	NA	NA	NA	NA
INCOME 9/						
LESS THAN 50% OF MSA/MD MEDIAN	99999999	99999999	NA	NA	NA	NA
50-79% OF MSA/MD MEDIAN	99999999	99999999	NA	NA	NA	NA
80-99% OF MSA/MD MEDIAN	99999999	99999999	NA	NA	NA	NA
100-119% OF MSA/MD MEDIAN	99999999	99999999	NA	NA	NA	NA
120% OR MORE OF MSA/MD MEDIAN	99999999	99999999	NA	NA	NA	NA
INCOME NOT AVAILABLE 6/	99999999	99999999	NA	NA	NA	NA
GENDER 19/						
MALE	99999999	99999999	NA	NA	NA	NA
FEMALE	99999999	99999999	NA	NA	NA	NA
JOINT (MALE/FEMALE)	99999999	99999999	NA	NA	NA	NA
GENDER NOT AVAILABLE 6/	99999999	99999999	NA	NA	NA	NA
CENSUS TRACT CHARACTERISTICS 10/						
RACIAL/ETHNIC COMPOSITION 11/						
LESS THAN 10% MINORITY	99999999	99999999	NA	NA	NA	NA
10-19% MINORITY	99999999	99999999	NA	NA	NA	NA
20-49% MINORITY	99999999	99999999	NA	NA	NA	NA
50-79% MINORITY	99999999	99999999	NA	NA	NA	NA
80-100% MINORITY	99999999	99999999	NA	NA	NA	NA
INCOME CHARACTERISTICS 12/ 13/						
LOW INCOME	99999999	99999999	NA	NA	NA	NA
MODERATE INCOME	99999999	99999999	NA	NA	NA	NA
MIDDLE INCOME	99999999	99999999	NA	NA	NA	NA
UPPER INCOME	99999999	99999999	NA	NA	NA	NA

SUMMARY TABLE B: LOAN PRICING INFORMATION FOR CONVENTIONAL LOANS BY INCIDENCE AND LEVEL, 2004

PAGE: 99999
RUN DATE: MM/DD/CCYY

INSTITUTION: XXXXXXXXXX-X XXXXXXXXXXXXXXXXXXXXXXXXXXXXXX

MSA/MD: 99999 - XXXXXXXXXXXXXXXXXXXXXXXXXXXXXXXXXXXXXXXX

PRICING INFORMATION	HOME PURCHASE		REFINANCE		HOME IMPROVEMENT		
	FIRST LIEN	JUNIOR LIEN	FIRST LIEN	JUNIOR LIEN	FIRST LIEN	JUNIOR LIEN	NO LIEN
1- TO 4-FAMILY OWNER OCCUPIED DWELLINGS (EXCLUDES MANUFACTURED HOMES)							
INCIDENCE OF PRICING							
NO PRICING REPORTED 15/	999999999	999999999	999999999	999999999	999999999	999999999	NA
PRICING REPORTED	999999999	999999999	999999999	999999999	999999999	999999999	NA
MEAN (POINTS ABOVE TREASURY: ONLY INCLUDE LOANS WITH APR ABOVE THE THRESHOLD 16/)	99.99	99.99	99.99	99.99	99.99	99.99	NA
MEDIAN(POINTS ABOVE TREASURY: ONLY INCLUDE LOANS WITH APR ABOVE THE THRESHOLD 16/)	99.99	99.99	99.99	99.99	99.99	99.99	NA
HOEPA STATUS							
HOEPA LOAN 17/	NA	NA	999999999	999999999	999999999	999999999	NA
NOT HOEPA LOAN	NA	NA	999999999	999999999	999999999	999999999	NA
MANUFACTURED HOME OWNER OCCUPIED DWELLINGS							
INCIDENCE OF PRICING							
NO PRICING REPORTED 15/	999999999	999999999	999999999	999999999	999999999	999999999	NA
PRICING REPORTED	999999999	999999999	999999999	999999999	999999999	999999999	NA
MEAN (POINTS ABOVE TREASURY: ONLY INCLUDE LOANS WITH APR ABOVE THE THRESHOLD 16/)	99.99	99.99	99.99	99.99	99.99	99.99	NA
MEDIAN(POINTS ABOVE TREASURY: ONLY INCLUDE LOANS WITH APR ABOVE THE THRESHOLD 16/)	99.99	99.99	99.99	99.99	99.99	99.99	NA
HOEPA STATUS							
HOEPA LOAN 17/	NA	NA	999999999	999999999	999999999	999999999	NA
NOT HOEPA LOAN	NA	NA	999999999	999999999	999999999	999999999	NA

SUMMARY TABLE A-1: DISPOSITION OF APPLICATIONS AND LOAN SALES BY LOAN TYPE, 1- TO 4-FAMILIES (EXCLUDES MANUFACTURED HOMES), 2004 PAGE: 99999
RUN DATE: MM/DD/CCYY

INSTITUTION: XXXXXXXXXX-X XXXXXXXXXXXXXXXXXXXXXXXXXXXXXX

INSTITUTION'S NATIONWIDE TOTALS

LOAN TYPE	HOME PURCHASE		REFINANCE		HOME IMPROVEMENT		
	FIRST LIEN	JUNIOR LIEN	FIRST LIEN	JUNIOR LIEN	FIRST LIEN	JUNIOR LIEN	NO LIEN
TOTAL APPLICATIONS 28/							
CONVENTIONAL	999999999	999999999	999999999	999999999	999999999	999999999	999999999
FHA	999999999	999999999	999999999	999999999	999999999	999999999	999999999
VA	999999999	999999999	999999999	999999999	999999999	999999999	999999999
FSA/RHS	999999999	999999999	999999999	999999999	999999999	999999999	999999999
LOANS ORIGINATED							
CONVENTIONAL	999999999	999999999	999999999	999999999	999999999	999999999	999999999
FHA	999999999	999999999	999999999	999999999	999999999	999999999	999999999
VA	999999999	999999999	999999999	999999999	999999999	999999999	999999999
FSA/RHS	999999999	999999999	999999999	999999999	999999999	999999999	999999999
APPLICATIONS APPROVED BUT NOT ACCEPTED							
CONVENTIONAL	999999999	999999999	999999999	999999999	999999999	999999999	999999999
FHA	999999999	999999999	999999999	999999999	999999999	999999999	999999999
VA	999999999	999999999	999999999	999999999	999999999	999999999	999999999
FSA/RHS	999999999	999999999	999999999	999999999	999999999	999999999	999999999
APPLICATIONS DENIED							
CONVENTIONAL	999999999	999999999	999999999	999999999	999999999	999999999	999999999
FHA	999999999	999999999	999999999	999999999	999999999	999999999	999999999
VA	999999999	999999999	999999999	999999999	999999999	999999999	999999999
FSA/RHS	999999999	999999999	999999999	999999999	999999999	999999999	999999999
APPLICATIONS WITHDRAWN							
CONVENTIONAL	999999999	999999999	999999999	999999999	999999999	999999999	999999999
FHA	999999999	999999999	999999999	999999999	999999999	999999999	999999999
VA	999999999	999999999	999999999	999999999	999999999	999999999	999999999
FSA/RHS	999999999	999999999	999999999	999999999	999999999	999999999	999999999
FILES CLOSED FOR INCOMPLETENESS							
CONVENTIONAL	999999999	999999999	999999999	999999999	999999999	999999999	999999999
FHA	999999999	999999999	999999999	999999999	999999999	999999999	999999999
VA	999999999	999999999	999999999	999999999	999999999	999999999	999999999
FSA/RHS	999999999	999999999	999999999	999999999	999999999	999999999	999999999

SUMMARY TABLE A-1: DISPOSITION OF APPLICATIONS AND LOAN SALES BY LOAN TYPE, 1- TO 4-FAMILIES (EXCLUDES MANUFACTURED HOMES), 2004 PAGE: 99999
RUN DATE: MM/DD/CCYY

INSTITUTION: XXXXXXXXXX-X XXXXXXXXXXXXXXXXXXXXXXXXXXXXXX INSTITUTION'S NATIONWIDE TOTALS

LOAN TYPE	HOME PURCHASE		REFINANCE		HOME IMPROVEMENT		
	FIRST LIEN	JUNIOR LIEN	FIRST LIEN	JUNIOR LIEN	FIRST LIEN	JUNIOR LIEN	NO LIEN
PREAPPROVALS DENIED							
CONVENTIONAL	999999999	999999999	NA	NA	NA	NA	NA
FHA	999999999	999999999	NA	NA	NA	NA	NA
VA	999999999	999999999	NA	NA	NA	NA	NA
FSA/RHS	999999999	999999999	NA	NA	NA	NA	NA
PREAPPROVALS APPROVED BUT NOT ACCEPTED 29/							
CONVENTIONAL	999999999	999999999	NA	NA	NA	NA	NA
FHA	999999999	999999999	NA	NA	NA	NA	NA
VA	999999999	999999999	NA	NA	NA	NA	NA
FSA/RHS	999999999	999999999	NA	NA	NA	NA	NA

MEMO ITEM: SUBSET OF LOANS ORIGINATED							
PREAPPROVALS RESULTING IN ORIGINATIONS							
CONVENTIONAL	999999999	999999999	NA	NA	NA	NA	NA
FHA	999999999	999999999	NA	NA	NA	NA	NA
VA	999999999	999999999	NA	NA	NA	NA	NA
FSA/RHS	999999999	999999999	NA	NA	NA	NA	NA
LOANS SOLD							
CONVENTIONAL	999999999	999999999	999999999	999999999	999999999	999999999	999999999
FHA	999999999	999999999	999999999	999999999	999999999	999999999	999999999
VA	999999999	999999999	999999999	999999999	999999999	999999999	999999999
FSA/RHS	999999999	999999999	999999999	999999999	999999999	999999999	999999999

SUMMARY TABLE A-2: DISPOSITION OF APPLICATIONS AND LOAN SALES BY LOAN TYPE, MANUFACTURED HOME, 2004

PAGE: 99999
RUN DATE: MM/DD/CCYY

INSTITUTION: XXXXXXXXXX-X XXXXXXXXXXXXXXXXXXXXXXXXXXXXXX

INSTITUTION'S NATIONWIDE TOTALS

LOAN TYPE	HOME PURCHASE		REFINANCE		HOME IMPROVEMENT		
	FIRST LIEN	JUNIOR LIEN	FIRST LIEN	JUNIOR LIEN	FIRST LIEN	JUNIOR LIEN	NO LIEN
TOTAL APPLICATIONS 28/							
CONVENTIONAL	999999999	999999999	999999999	999999999	999999999	999999999	999999999
FHA	999999999	999999999	999999999	999999999	999999999	999999999	999999999
VA	999999999	999999999	999999999	999999999	999999999	999999999	999999999
FSA/RHS	999999999	999999999	999999999	999999999	999999999	999999999	999999999
LOANS ORIGINATED							
CONVENTIONAL	999999999	999999999	999999999	999999999	999999999	999999999	999999999
FHA	999999999	999999999	999999999	999999999	999999999	999999999	999999999
VA	999999999	999999999	999999999	999999999	999999999	999999999	999999999
FSA/RHS	999999999	999999999	999999999	999999999	999999999	999999999	999999999
APPLICATIONS APPROVED BUT NOT ACCEPTED							
CONVENTIONAL	999999999	999999999	999999999	999999999	999999999	999999999	999999999
FHA	999999999	999999999	999999999	999999999	999999999	999999999	999999999
VA	999999999	999999999	999999999	999999999	999999999	999999999	999999999
FSA/RHS	999999999	999999999	999999999	999999999	999999999	999999999	999999999
APPLICATIONS DENIED							
CONVENTIONAL	999999999	999999999	999999999	999999999	999999999	999999999	999999999
FHA	999999999	999999999	999999999	999999999	999999999	999999999	999999999
VA	999999999	999999999	999999999	999999999	999999999	999999999	999999999
FSA/RHS	999999999	999999999	999999999	999999999	999999999	999999999	999999999
APPLICATIONS WITHDRAWN							
CONVENTIONAL	999999999	999999999	999999999	999999999	999999999	999999999	999999999
FHA	999999999	999999999	999999999	999999999	999999999	999999999	999999999
VA	999999999	999999999	999999999	999999999	999999999	999999999	999999999
FSA/RHS	999999999	999999999	999999999	999999999	999999999	999999999	999999999
FILES CLOSED FOR INCOMPLETENESS							
CONVENTIONAL	999999999	999999999	999999999	999999999	999999999	999999999	999999999
FHA	999999999	999999999	999999999	999999999	999999999	999999999	999999999
VA	999999999	999999999	999999999	999999999	999999999	999999999	999999999
FSA/RHS	999999999	999999999	999999999	999999999	999999999	999999999	999999999

SUMMARY TABLE A-2: DISPOSITION OF APPLICATIONS AND LOAN SALES BY LOAN TYPE, MANUFACTURED HOME, 2004

PAGE: 99999
RUN DATE: MM/DD/CCYY

INSTITUTION: XXXXXXXXXX-X XXXXXXXXXXXXXXXXXXXXXXXXXXXXXX

INSTITUTION'S NATIONWIDE TOTALS

LOAN TYPE	HOME PURCHASE		REFINANCE		HOME IMPROVEMENT		
	FIRST LIEN	JUNIOR LIEN	FIRST LIEN	JUNIOR LIEN	FIRST LIEN	JUNIOR LIEN	NO LIEN
PREAPPROVALS DENIED							
CONVENTIONAL	999999999	999999999	NA	NA	NA	NA	NA
FHA	999999999	999999999	NA	NA	NA	NA	NA
VA	999999999	999999999	NA	NA	NA	NA	NA
FSA/RHS	999999999	999999999	NA	NA	NA	NA	NA
PREAPPROVALS APPROVED BUT NOT ACCEPTED 29/							
CONVENTIONAL	999999999	999999999	NA	NA	NA	NA	NA
FHA	999999999	999999999	NA	NA	NA	NA	NA
VA	999999999	999999999	NA	NA	NA	NA	NA
FSA/RHS	999999999	999999999	NA	NA	NA	NA	NA

MEMO ITEM: SUBSET OF LOANS ORIGINATED							
PREAPPROVALS RESULTING IN ORIGINATIONS							
CONVENTIONAL	999999999	999999999	NA	NA	NA	NA	NA
FHA	999999999	999999999	NA	NA	NA	NA	NA
VA	999999999	999999999	NA	NA	NA	NA	NA
FSA/RHS	999999999	999999999	NA	NA	NA	NA	NA
LOANS SOLD							
CONVENTIONAL	999999999	999999999	999999999	999999999	999999999	999999999	999999999
FHA	999999999	999999999	999999999	999999999	999999999	999999999	999999999
VA	999999999	999999999	999999999	999999999	999999999	999999999	999999999
FSA/RHS	999999999	999999999	999999999	999999999	999999999	999999999	999999999

SUMMARY TABLE A-3: DISPOSITION OF APPLICATIONS AND LOAN SALES BY LOAN TYPE, MULTIFAMILY, 2004

PAGE: 99999
RUN DATE: MM/DD/CCYY

INSTITUTION: XXXXXXXXXX-X XXXXXXXXXXXXXXXXXXXXXXXXXXXXXX

INSTITUTION'S NATIONWIDE TOTALS

LOAN TYPE	HOME PURCHASE		REFINANCE		HOME IMPROVEMENT		
	FIRST LIEN	JUNIOR LIEN	FIRST LIEN	JUNIOR LIEN	FIRST LIEN	JUNIOR LIEN	NO LIEN
TOTAL APPLICATIONS 28/							
CONVENTIONAL	999999999	999999999	999999999	999999999	999999999	999999999	999999999
FHA	999999999	999999999	999999999	999999999	999999999	999999999	999999999
VA	999999999	999999999	999999999	999999999	999999999	999999999	999999999
FSA/RHS	999999999	999999999	999999999	999999999	999999999	999999999	999999999
LOANS ORIGINATED							
CONVENTIONAL	999999999	999999999	999999999	999999999	999999999	999999999	999999999
FHA	999999999	999999999	999999999	999999999	999999999	999999999	999999999
VA	999999999	999999999	999999999	999999999	999999999	999999999	999999999
FSA/RHS	999999999	999999999	999999999	999999999	999999999	999999999	999999999
APPLICATIONS APPROVED BUT NOT ACCEPTED							
CONVENTIONAL	999999999	999999999	999999999	999999999	999999999	999999999	999999999
FHA	999999999	999999999	999999999	999999999	999999999	999999999	999999999
VA	999999999	999999999	999999999	999999999	999999999	999999999	999999999
FSA/RHS	999999999	999999999	999999999	999999999	999999999	999999999	999999999
APPLICATIONS DENIED							
CONVENTIONAL	999999999	999999999	999999999	999999999	999999999	999999999	999999999
FHA	999999999	999999999	999999999	999999999	999999999	999999999	999999999
VA	999999999	999999999	999999999	999999999	999999999	999999999	999999999
FSA/RHS	999999999	999999999	999999999	999999999	999999999	999999999	999999999
APPLICATIONS WITHDRAWN							
CONVENTIONAL	999999999	999999999	999999999	999999999	999999999	999999999	999999999
FHA	999999999	999999999	999999999	999999999	999999999	999999999	999999999
VA	999999999	999999999	999999999	999999999	999999999	999999999	999999999
FSA/RHS	999999999	999999999	999999999	999999999	999999999	999999999	999999999
FILES CLOSED FOR INCOMPLETENESS							
CONVENTIONAL	999999999	999999999	999999999	999999999	999999999	999999999	999999999
FHA	999999999	999999999	999999999	999999999	999999999	999999999	999999999
VA	999999999	999999999	999999999	999999999	999999999	999999999	999999999
FSA/RHS	999999999	999999999	999999999	999999999	999999999	999999999	999999999
MEMO ITEM: SUBSET OF LOANS ORIGINATED							
LOANS SOLD							
CONVENTIONAL	999999999	999999999	999999999	999999999	999999999	999999999	999999999
FHA	999999999	999999999	999999999	999999999	999999999	999999999	999999999
VA	999999999	999999999	999999999	999999999	999999999	999999999	999999999
FSA/RHS	999999999	999999999	999999999	999999999	999999999	999999999	999999999

SUMMARY TABLE A-4: DISPOSITION OF PREAPPROVALS FOR CONVENTIONAL HOME-PURCHASE LOANS, FIRST LIEN, 1- TO 4-FAMILY DWELLINGS (EXCLUDES MANUFACTURED HOMES), BY BORROWER OR CENSUS TRACT CHARACTERISTICS, 2004

PAGE: 99999
RUN DATE: MM/DD/CCYY

INSTITUTION: XXXXXXXXXX-X XXXXXXXXXXXXXXXXXXXXXXXXXXXXXX

INSTITUTION'S NATIONWIDE TOTALS

BORROWER OR CENSUS TRACT CHARACTERISTICS	PREAPPROVALS RESULTING IN ORIGINATIONS		PREAPPROVALS APPROVED BUT NOT ACCEPTED 29/		PREAPPROVALS DENIED	
	#	$000'S	#	$000'S	#	$000'S
BORROWER CHARACTERISTICS						
RACE 5/						
AMERICAN INDIAN/ALASKA NATIVE	99999999	99999999	99999999	99999999	99999999	99999999
ASIAN	99999999	99999999	99999999	99999999	99999999	99999999
BLACK OR AFRICAN AMERICAN	99999999	99999999	99999999	99999999	99999999	99999999
NATIVE HAWAIIAN/OTHER PACIFIC ISLND	99999999	99999999	99999999	99999999	99999999	99999999
WHITE	99999999	99999999	99999999	99999999	99999999	99999999
2 OR MORE MINORITY RACES	99999999	99999999	99999999	99999999	99999999	99999999
JOINT (WHITE/MINORITY RACE)	99999999	99999999	99999999	99999999	99999999	99999999
RACE NOT AVAILABLE 6/	99999999	99999999	99999999	99999999	99999999	99999999
ETHNICITY 7/						
HISPANIC OR LATINO	99999999	99999999	99999999	99999999	99999999	99999999
NOT HISPANIC OR LATINO	99999999	99999999	99999999	99999999	99999999	99999999
JOINT (HISPANIC OR LATINO/	99999999	99999999	99999999	99999999	99999999	99999999
NOT HISPANIC OR LATINO)	99999999	99999999	99999999	99999999	99999999	99999999
ETHNICITY NOT AVAILABLE 6/	99999999	99999999	99999999	99999999	99999999	99999999
MINORITY STATUS 8/						
WHITE NON-HISPANIC	99999999	99999999	99999999	99999999	99999999	99999999
OTHERS, INCLUDING HISPANIC	99999999	99999999	99999999	99999999	99999999	99999999
INCOME 9/						
LESS THAN 50% OF MSA/MD MEDIAN	99999999	99999999	NA	NA	NA	NA
50-79% OF MSA/MD MEDIAN	99999999	99999999	NA	NA	NA	NA
80-99% OF MSA/MD MEDIAN	99999999	99999999	NA	NA	NA	NA
100-119% OF MSA/MD MEDIAN	99999999	99999999	NA	NA	NA	NA
120% OR MORE OF MSA/MD MEDIAN	99999999	99999999	NA	NA	NA	NA
INCOME NOT AVAILABLE 6/	99999999	99999999	NA	NA	NA	NA
GENDER 19/						
MALE	99999999	99999999	99999999	99999999	99999999	99999999
FEMALE	99999999	99999999	99999999	99999999	99999999	99999999
JOINT (MALE/FEMALE)	99999999	99999999	99999999	99999999	99999999	99999999
GENDER NOT AVAILABLE 6/	99999999	99999999	99999999	99999999	99999999	99999999
CENSUS TRACT CHARACTERISTICS 10/						
RACIAL/ETHNIC COMPOSITION 11/						
LESS THAN 10% MINORITY	99999999	99999999	NA	NA	NA	NA
10-19% MINORITY	99999999	99999999	NA	NA	NA	NA
20-49% MINORITY	99999999	99999999	NA	NA	NA	NA
50-79% MINORITY	99999999	99999999	NA	NA	NA	NA
80-100% MINORITY	99999999	99999999	NA	NA	NA	NA
INCOME CHARACTERISTICS 12/ 13/						
LOW INCOME	99999999	99999999	NA	NA	NA	NA
MODERATE INCOME	99999999	99999999	NA	NA	NA	NA
MIDDLE INCOME	99999999	99999999	NA	NA	NA	NA
UPPER INCOME	99999999	99999999	NA	NA	NA	NA

SUMMARY TABLE B: LOAN PRICING INFORMATION FOR CONVENTIONAL LOANS BY INCIDENCE AND LEVEL, 2004

PAGE: 99999
RUN DATE: MM/DD/CCYY

INSTITUTION: XXXXXXXXXX-X XXXXXXXXXXXXXXXXXXXXXXXXXXXXXX

INSTITUTION'S NATIONWIDE TOTALS

PRICING INFORMATION	HOME PURCHASE		REFINANCE		HOME IMPROVEMENT		
	FIRST LIEN	JUNIOR LIEN	FIRST LIEN	JUNIOR LIEN	FIRST LIEN	JUNIOR LIEN	NO LIEN
1- TO 4-FAMILY OWNER OCCUPIED DWELLINGS (EXCLUDES MANUFACTURED HOMES)							
INCIDENCE OF PRICING							
NO PRICING REPORTED 15/	999999999	999999999	999999999	999999999	999999999	999999999	NA
PRICING REPORTED	999999999	999999999	999999999	999999999	999999999	999999999	NA
MEAN (POINTS ABOVE TREASURY: ONLY INCLUDE LOANS WITH APR ABOVE THE THRESHOLD 16/)	99.99	99.99	99.99	99.99	99.99	99.99	NA
MEDIAN(POINTS ABOVE TREASURY: ONLY INCLUDE LOANS WITH APR ABOVE THE THRESHOLD 16/)	99.99	99.99	99.99	99.99	99.99	99.99	NA
HOEPA STATUS							
HOEPA LOAN 17/	NA	NA	999999999	999999999	999999999	999999999	NA
NOT HOEPA LOAN	NA	NA	999999999	999999999	999999999	999999999	NA
MANUFACTURED HOME OWNER OCCUPIED DWELLINGS							
INCIDENCE OF PRICING							
NO PRICING REPORTED 15/	999999999	999999999	999999999	999999999	999999999	999999999	NA
PRICING REPORTED	999999999	999999999	999999999	999999999	999999999	999999999	NA
MEAN (POINTS ABOVE TREASURY: ONLY INCLUDE LOANS WITH APR ABOVE THE THRESHOLD 16/)	99.99	99.99	99.99	99.99	99.99	99.99	NA
MEDIAN(POINTS ABOVE TREASURY: ONLY INCLUDE LOANS WITH APR ABOVE THE THRESHOLD 16/)	99.99	99.99	99.99	99.99	99.99	99.99	NA
HOEPA STATUS							
HOEPA LOAN 17/	NA	NA	999999999	999999999	999999999	999999999	NA
NOT HOEPA LOAN	NA	NA	999999999	999999999	999999999	999999999	NA

HOME MORTGAGE DISCLOSURE ACT DISCLOSURE STATEMENT
EXPLANATION OF NOTES

WHEN CATEGORIZING INTO GROUPS, PERCENTAGES ARE NOT ROUNDED. IF THERE ARE NO DATA REPORTED FOR A PARTICULAR TABLE, THAT TABLE WILL NOT BE REPORTED. THE "#" MEANS NUMBER OF APPLICATIONS OR LOANS AS APPLICABLE. TABLES THAT REPORT LOAN PRICING INFORMATION (TABLE 3-2, ALL TABLES IN THE 11 SERIES, TABLE 12-2, AND SUMMARY TABLE B) EXCLUDE LOANS WITH APPLICATION DATES BEFORE JANUARY 1, 2004.

1. ALL CENSUS TRACT AND COUNTY DEFINITIONS AND POPULATION COUNTS ARE BASED ON THE 2000 CENSUS OF POPULATION AND HOUSING.
2. THE "INVALID GEOGRAPHIC IDENTIFIERS" ROW CONTAINS DATA WHEN FINANCIAL INSTITUTIONS HAVE REPORTED STATE CODES, COUNTY CODES, OR CENSUS TRACT NUMBERS THAT DO NOT CONFORM WITH 2000 CENSUS DEFINITIONS, OR WHEN THIS INFORMATION WAS NOT REPORTED BY THE INSTITUTION. THE "INVALID MSA/MD NUMBERS" ROW CONTAINS DATA WHEN FINANCIAL INSTITUTIONS HAVE REPORTED INVALID MSA/MD CODES AS DEFINED BY THE U.S. OFFICE OF MANAGEMENT AND BUDGET.
3. INCLUDES DATA ON LOANS IN THIS MSA/MD FROM INSTITUTIONS WITH A HOME OR BRANCH OFFICE IN THIS MSA/MD, AND FROM CERTAIN INSTITUTIONS WITHOUT SUCH AN OFFICE.
4. IN AGGREGATE TABLE 1, PERCENTAGE MINORITY POPULATION ("%MIN POP") MEANS, FOR A PARTICULAR CENSUS TRACT, THE PERCENTAGE OF PERSONS OF MINORITY RACES AND WHITES OF HISPANIC OR LATINO ORIGIN IN RELATION TO THE CENSUS TRACT'S TOTAL POPULATION. PERCENTAGES ARE ROUNDED TO THE NEAREST FULL PERCENTAGE POINT.
5. APPLICANTS ARE SHOWN IN ONLY ONE RACE CATEGORY. FOR PURPOSES OF CATEGORIZATION, THE GENERAL RULE IS: THE RACE (INCLUDING SITUATIONS WHERE RACE WAS REPORTED AS NOT PROVIDED OR NOT APPLICABLE) OF THE APPLICATION IS CATEGORIZED BY THE RACE OF THE FIRST PERSON LISTED ON THE APPLICATION UNLESS THE "JOINT" RACE DEFINITION APPLIES. ("JOINT" MEANS ONE APPLICANT REPORTS A SINGLE RACIAL DESIGNATION OF "WHITE" AND THE OTHER APPLICANT REPORTS ONE OR MORE MINORITY RACIAL DESIGNATIONS.) IF THE "JOINT" DEFINITION DOES NOT APPLY, THE RACE OF THE FIRST PERSON ON THE APPLICATION IS CATEGORIZED AS FOLLOWS:
   - THE REPORTED RACE WHEN A SINGLE RACIAL DESIGNATION IS REPORTED; OR
   - "2 OR MORE MINORITY RACES" WHEN TWO OR MORE MINORITY RACIAL DESIGNATIONS ARE REPORTED; OR
   - THE MINORITY RACE WHEN TWO RACIAL DESIGNATIONS ARE REPORTED AND ONE IS WHITE.
6. "NOT AVAILABLE" INCLUDES SITUATIONS WHERE INFORMATION WAS REPORTED AS NOT PROVIDED OR NOT APPLICABLE. FOR THE INCOME CLASSIFICATION, ZEROS AND INVALID CODES ARE INCLUDED.
7. APPLICANTS ARE SHOWN IN ONLY ONE ETHNICITY CATEGORY. FOR PURPOSES OF CATEGORIZATION, THE GENERAL RULE IS: THE ETHNICITY (INCLUDING SITUATIONS WHERE ETHNICITY WAS REPORTED AS NOT PROVIDED OR NOT APPLICABLE) OF THE APPLICATION IS CATEGORIZED BY THE ETHNICITY OF THE FIRST PERSON LISTED ON THE APPLICATION UNLESS THE "JOINT" ETHNICITY DEFINITION APPLIES. ("JOINT" MEANS ONE APPLICANT REPORTS ETHNICITY AS HISPANIC OR LATINO AND THE OTHER APPLICANT REPORTS ETHNICITY AS NOT HISPANIC OR LATINO.)
8. "MINORITY STATUS" COMBINES INFORMATION REPORTED ON RACE AND ETHNICITY. "WHITE NON-HISPANIC" CONSISTS OF APPLICANTS OF WHITE RACE WHO ARE NOT OF HISPANIC OR LATINO ORIGIN. THE " OTHERS, INCLUDING HISPANIC" CATEGORY CONSISTS OF APPLICANTS OF MINORITY RACES OR HISPANIC OR LATINO ORIGIN. APPLICANTS NOT SHOWN ARE NON-HISPANICS WHERE RACE IS NOT AVAILABLE, WHITES WHERE ETHNICITY IS NOT AVAILABLE AND THOSE WHERE BOTH RACE AND ETHNICITY ARE NOT AVAILABLE.
9. APPLICANTS ARE CATEGORIZED BY THE RATIO OF THEIR REPORTED INCOME TO THE MEDIAN FAMILY INCOME OF THE MSA/MD. THE MEDIAN FAMILY INCOME OF THE MSA/MD IS BASED ON ANNUAL ESTIMATES DEVELOPED BY THE DEPARTMENT OF HOUSING AND URBAN DEVELOPMENT (HUD).

10. THE TYPE OF CENSUS TRACT IS BASED ON DEMOGRAPHIC INFORMATION FROM THE 2000 CENSUS OF POPULATION AND HOUSING. IT IS NOT BASED ON REPORTED APPLICANT CHARACTERISTICS.
11. "MINORITY" MEANS ALL RACES OTHER THAN WHITE AND WHITES OF HISPANIC OR LATINO ORIGIN.
12. THE LOW-INCOME CATEGORY CONSISTS OF CENSUS TRACTS WHERE THE MEDIAN FAMILY INCOME IS LESS THAN 50 PERCENT OF THE MEDIAN MSA/MD INCOME, BASED ON THE 2000 CENSUS OF POPULATION AND HOUSING. THE MODERATE-INCOME CATEGORY CONSISTS OF CENSUS TRACTS WHERE THE MEDIAN FAMILY INCOME IS AT LEAST 50 PERCENT AND LESS THAN 80 PERCENT OF THE MEDIAN MSA/MD INCOME. THE MIDDLE-INCOME CATEGORY CONSISTS OF CENSUS TRACTS WHERE THE MEDIAN FAMILY INCOME IS AT LEAST 80 PERCENT AND LESS THAN 120 PERCENT OF THE MEDIAN MSA/MD INCOME. THE UPPER-INCOME CATEGORY CONSISTS OF CENSUS TRACTS WHERE THE MEDIAN FAMILY INCOME IS 120 PERCENT OR MORE OF THE MEDIAN MSA/MD INCOME.
13. EXCLUDES CENSUS TRACTS WITH NO REPORTED INCOME.
14. "TOTAL" INCLUDES ALL APPLICATIONS OR LOANS, AS APPLICABLE, FOR THE INDICATED CATEGORY, AND MAY NOT SUM FROM ITEMS IN THE BODY OF THE TABLE.
15. INCLUDES LOANS IN WHICH THE ANNUAL PERCENTAGE RATE WAS BELOW THE THRESHOLD FOR REPORTING, AND LOANS FOR WHICH NO ANNUAL PERCENTAGE RATE WAS AVAILABLE FOR CALCULATING RATE SPREAD BECAUSE THE LOAN WAS NOT SUBJECT TO REGULATION Z. DOES NOT INCLUDE PURCHASED LOANS OR APPLICATIONS THAT DID NOT RESULT IN ORIGINATIONS.
16. THE ANNUAL PERCENTAGE RATE THRESHOLD FOR REPORTING PRICING INFORMATION IS 3 PERCENTAGE POINTS ABOVE THE APPLICABLE TREASURY YIELD FOR FIRST-LIEN LOANS OR 5 PERCENTAGE POINTS ABOVE THE APPLICABLE TREASURY YIELD FOR JUNIOR-LIEN LOANS.
17. LOANS COVERED BY THE HOME OWNERSHIP AND EQUITY PROTECTION ACT OF 1994 (HOEPA).
18. "TOTAL" INCLUDES THOSE CASES WHERE GENDER WAS REPORTED AND WHERE THIS INFORMATION WAS NOT AVAILABLE.
19. APPLICANTS ARE SHOWN IN ONLY ONE GENDER CATEGORY. FOR PURPOSES OF CATEGORIZATION, THE GENERAL RULE IS: THE GENDER (INCLUDING SITUATIONS WHERE GENDER WAS REPORTED AS NOT PROVIDED OR NOT APPLICABLE) OF THE APPLICATION IS CATEGORIZED BY THE GENDER OF THE FIRST PERSON LISTED ON THE APPLICATION UNLESS THE "JOINT" GENDER DEFINITION APPLIES. ("JOINT" MEANS ONE APPLICANT REPORTS GENDER AS MALE AND THE OTHER APPLICANT REPORTS GENDER AS FEMALE.)
20. "APPLICATIONS RECEIVED" EQUALS THE TOTAL NUMBER OF LOANS ORIGINATED, APPLICATIONS APPROVED BUT NOT ACCEPTED, APPLICATIONS DENIED, APPLICATIONS WITHDRAWN, AND FILES CLOSED FOR INCOMPLETENESS; EXCLUDES LOANS PURCHASED, PREAPPROVAL REQUESTS DENIED, AND PREAPPROVAL REQUESTS APPROVED BUT NOT ACCEPTED.
21. INCLUDES CENSUS TRACTS WITH NO REPORTED INCOME.
22. INSTITUTIONS ARE NOT REQUIRED TO REPORT REASONS FOR LOAN DENIALS. "TOTAL" INCLUDES CASES WHERE MULTIPLE REASONS WERE REPORTED.
23. CENSUS TRACTS ARE GROUPED ACCORDING TO MEDIAN AGE. BECAUSE THE CENSUS DATA ON HOUSING STOCK AGE ARE CATEGORIZED IN INTERVALS OF SEVERAL YEARS, THE MEDIAN HOUSING STOCK AGE FOR A CENSUS TRACT IS DETERMINED BY CALCULATING THE MID-POINT OF THE INTERVAL IN WHICH THE MEDIAN UNIT FALLS. THE TRACTS ARE GROUPED IN THIS TABLE BY THE TIME PERIOD IN WHICH THE MEDIAN UNIT WAS BUILT.
24. FOR MSA/MDS WITH MORE THAN ONE PRINCIPAL CITY, ALL PRINCIPAL CITIES ARE INCLUDED.
25. "MSA/MD LESS PRINCIPAL CITY" INCLUDES ALL CENSUS TRACTS OUTSIDE THE PRINCIPAL CITY (OR CITIES) BUT WITHIN THE MSA/MD.
26. THE "TRACT UNKNOWN" ROW CONTAINS DATA WHEN FINANCIAL INSTITUTIONS REPORTED TRACT NUMBERS THAT DO NOT CONFORM WITH 2000 CENSUS DEFINITIONS, OR WHEN FINANCIAL INSTITUTIONS DID NOT REPORT THIS INFORMATION.
27. THE "COUNTY UNKNOWN" ROW CONTAINS DATAWHEN FINANCIAL INSTITUTIONS REPORTED STATE AND COUNTY CODE COMBINATIONS THAT DO NOT CONFORM WITH 2000 CENSUS DEFINITIONS, OR WHEN FINANCIAL INSTITUTIONS DID NOT REPORT THE COUNTY.

28. "TOTAL APPLICATIONS" EQUALS THE TOTAL NUMBER OF LOANS ORIGINATED, APPLICATIONS APPROVED BUT NOT ACCEPTED, APPLICATIONS DENIED, APPLICATIONS WITHDRAWN, AND FILES CLOSED FOR INCOMPLETENESS; EXCLUDES LOANS PURCHASED. FOR SUMMARY TABLES AT THE INSTITUTION-WIDE LEVEL, "TOTAL APPLICATIONS" ALSO INCLUDES PREAPPROVAL REQUESTS DENIED AND PREAPPROVAL REQUESTS APPROVED BUT NOT ACCEPTED.
29. REPORTING PREAPPROVALS APPROVED BUT NOT ACCEPTED IS OPTIONAL; THEREFORE, THE NUMBERS IN THIS CATEGORY MAY NOT BE CONSISTENTLY REPORTED ACROSS INSTITUTIONS.

[FR Doc. 04–27425 Filed 12–17–04; 8:45 am]

BILLING CODE 6210–01–C

Federal Register

Monday,
December 20, 2004

Part IV

Department of Transportation

National Highway and Traffic Safety Administration

49 CFR Part 571

Federal Motor Vehicle Safety Standards; Brake Hoses; Final Rule

DEPARTMENT OF TRANSPORTATION

National Highway Traffic Safety Administration

49 CFR Part 571

[Docket No. NHTSA–2003–14483]

RIN 2127–AH79

Federal Motor Vehicle Safety Standards; Brake Hoses

AGENCY: National Highway Traffic Safety Administration (NHTSA), Department of Transportation (DOT).

ACTION: Final rule.

SUMMARY: This rule updates the Federal motor vehicle safety standard on brake hoses to incorporate the substantive specifications of several Society of Automotive Engineers (SAE) Recommended Practices relating to hydraulic brake hoses, vacuum brake hoses, air brake hoses, plastic air brake tubing, and end fittings. The agency initiated this rulemaking in response to a joint petition from several brake hose and tubing manufacturers.

DATES: This final rule becomes effective December 20, 2006. The incorporation by reference of certain publications listed in the regulations is approved by the Director of the Federal Register as of December 20, 2006.

Optional early compliance is permitted as of February 18, 2005.

Any petitions for reconsideration of today's final rule must be received by NHTSA not later than February 3, 2005.

ADDRESSES: Petitions for reconsideration should refer to the docket number for this action and be submitted to: Administrator, National Highway Traffic Safety Administration, 400 Seventh Street, SW., Washington, DC 20590.

FOR FURTHER INFORMATION CONTACT:

For non-legal issues, Mr. Jeff Woods, Vehicle Dynamics Division, Office of Vehicle Safety Standards (Telephone: (202) 366–6206) (Fax: (202) 366–4921).

For legal issues, Ms. Dorothy Nakama, Office of the Chief Counsel (Telephone: (202) 366–2992) (Fax: (202) 366–3820).

You may send mail to both of these officials at: National Highway Traffic Safety Administration, 400 Seventh St., SW., Washington, DC 20590.

SUPPLEMENTARY INFORMATION:

Table of Contents

I. Background
II. Notice of Proposed Rulemaking
III. Summary of Comments
IV. Agency Decision to Issue a Final Rule
V. Issues Raised by Commenters and NHTSA's Responses
A. Issues Relating to All Types of Brake Hose
1. Use of the term ''burst''
2. Use of the term ''any''
3. Constriction test method
4. Specification of ozone concentration
B. Hydraulic Brake Hoses
1. General hydraulic brake hose comments in response to the NPRM
2. Hydraulic brake hose manufacturer identification requirements
3. Expansion and burst strength (volumetric expansion) test
4. Tensile strength
5. Water absorption and pressure test, tensile strength, and whip resistance
6. Low temperature resistance test
7. Brake fluid compatibility, constriction, and burst strength
8. End fitting corrosion resistance
9. High temperature impulse test
C. Air Brake Hoses
1. Construction and labeling
2. High temperature resistance
3. Low temperature resistance
4. Ozone resistance
5. Adhesion
6. Air pressure (leakage)
7. Tensile strength
8. Minimum bend radius
D. Vacuum Brake Hoses
1. Swell (fuel resistance)
E. Plastic Air Brake Tubing
1. General comments
2. Construction
3. Labeling
4. Dimensions and tolerances
5. One hundred percent leak test
6. Burst test
7. Moisture absorption
8. Ultraviolet resistance
9. Resistance to zinc chloride and methyl alcohol
10. Stiffness
11. Heat aging adhesion
12. Collapse resistance
13. Oil resistance
14. Ozone resistance
F. Plastic Air Brake Tubing Assemblies and End Fittings
1. General comments
2. Tensile strength
3. Hot tensile strength
4. Vibration leak test
5. Proof and burst test (end fitting retention)
6. Serviceability test
7. End fitting dimensional requirements
8. End fitting corrosion resistance
G. New Types of Brake Hose
H. Metallic Tubing and Pipe
VI. Statutory Bases for the Final Rule
VII. Effective Date
VIII. Rulemaking Analyses and Notices
A. Executive Order 12866 and DOT Regulatory Policies and Procedures
B. Regulatory Flexibility Act
C. National Environmental Policy Act
D. Executive Order 13132 (Federalism)
E. Civil Justice Reform
F. Paperwork Reduction Act
G. National Technology Transfer and Advancement Act
H. Unfunded Mandates Reform Act
I. Plain Language
J. Regulation Identifier Number
Final Rule Regulatory Text

I. Background

On October 30, 1998, three brake hose manufacturers, Elf Atochem North America, Inc., Mark IV Industrial/Dayco Eastman, and Parker Hannifin Corporation,[1] filed a joint petition for rulemaking with NHTSA. The petitioners requested that certain requirements relating to brake hoses, brake hose tubing, and brake hose end fittings that are presently administered by the Federal Motor Carrier Safety Administration (FMCSA) be incorporated into the brake hose standard that is administered by NHTSA. The Federal Motor Carrier Safety Regulations (FMCSR) requirements for brake hoses at 49 CFR 393.45 (Brake tubing and hose, adequacy) and 49 CFR 393.46 (Brake tubing and hose connections) reference several Society of Automotive Engineers (SAE) standards that describe the dimensions and performance requirements for brake hoses and end fittings for hydraulic, vacuum, and air brake hoses, and also metal and plastic tubing and end fittings used in brake systems. Specifically, the petitioners requested that the SAE standards referenced in the FMCSRs be incorporated into 49 CFR 571.106 (Brake hoses) of the Federal Motor Vehicle Safety Standards (FMVSS) that are administered by NHTSA.

The petitioners requested that the application of these SAE specifications be limited to hose, tubing, and fittings used on trucks, truck-trailer combinations, and buses with either a GVWR greater than 10,000 pounds or which are designed to transport 16 or more people, including the driver. In addition, the petitioners requested that the current versions of the SAE specifications be adopted instead of the older versions cited in the FMCSRs.

The joint petition was submitted in light of a 1997 proposal by the Federal Highway Administration (FHWA), which then administered the FMCSRs, to delete these provisions. The FHWA stated that because it has no statutory authority to regulate vehicle manufacturers or manufacturers of brake hose, tubing, or fittings, all such regulations should be included in NHTSA's FMVSS rather than in the FMCSRs. The FHWA proposed adopting a requirement that commercial motor vehicles be maintained in compliance

[1] Since the petition was filed, mark IV Industrial/Dayco Eastman has been acqired by Parker Hannifin Corporation. Elf Atochem North American, Inc. was integrted into Atofina Chemical, Inc. The successor petitioning companies are referred to as Parker/Atofina.

with FMVSS No. 106. However, many of the provisions included in the FMCSRs in this subject area were not included in FMVSS No. 106.

In a 1998 public meeting on the subject, representatives from NHTSA and FHWA said that they favored consolidating all requirements for brake hose, brake tubing, and fittings in FMVSS No. 106, instead of maintaining separate requirements under the jurisdiction of two different agencies. They explained that consolidation of the requirements would, among other things, make them more enforceable. Some of the brake component manufacturers stated their opposition to deleting the SAE specifications for their products. FHWA and NHTSA indicated that anyone opposed to FHWA's proposal was welcome to file a petition for rulemaking requesting that the SAE specifications proposed for deletion from the FMCSRs be incorporated into FMVSS No. 106.

For details about FMCSR's brake hose requirements and additional background behind the joint petitions, please see NHTSA's notice of proposed rulemaking (NPRM) of May 15, 2003 (68 FR 26384, at pages 26384 to 26385).

II. Notice of Proposed Rulemaking

In an NPRM published on May 15, 2003 (68 FR 26384) [DOT Docket No. 03–14483] NHTSA announced that it had granted the joint petition for rulemaking to amend FMVSS No. 106. The agency agreed with the petitioners that there was a safety need to transfer the brake hose, tubing, and fitting requirements in Sections 393.45 and 393.46 of the FMCSRs to FMVSS No. 106, before those requirements were removed. NHTSA tentatively concluded that to ensure the continued safety of commercial motor vehicle braking systems, the substantive specifications of the SAE Recommended Practices should be incorporated into FMVSS No. 106, with a few exceptions. This would involve, among other changes, establishing a new category in FMVSS No. 106 for plastic air brake tubing, end fittings, and tubing assemblies.

NHTSA's decision to grant the petition was also based on the fact that FMVSS No. 106 had not been substantially updated in many years. The agency noted that most of the substantive requirements currently in FMVSS No. 106 were originally based on SAE standards and American Society for Testing and Materials (ASTM) standards referenced therein. While the SAE and ASTM standards have been modified over time to keep pace with technological developments in the industry, the substantive requirements of FMVSS No. 106 have remained relatively unchanged. Therefore, NHTSA's proposed changes to FMVSS No. 106 took into account the substantial technological developments that have occurred and sought to align the standard's requirements with standard industry practices. Incorporating many of the SAE standards' performance requirements is consistent with Office of Management and Budget (OMB) Circular A–119, which directs federal agencies to use and/or develop voluntary consensus industry standards, in accordance with Pub. L. 104–113, the ''National Technology Transfer and Advancement Act of 1995.''

The agency's proposal differed as follows from the petition:

First, instead of simply incorporating complete SAE standards by reference as the FMCSRs currently do, NHTSA proposed to incorporate only the specific requirements/specifications of the SAE standards that are either more rigorous than those in FMVSS No. 106 or are not present at all in FMVSS No. 106.

Second, the agency did not propose to limit the application of those SAE requirements/specifications to brake hose, tubing, and fittings used on commercial motor vehicles. NHTSA tentatively concluded that all brake hose, tubing, and fittings can and should meet the SAE requirements/specifications, regardless of their end use.

Third, although NHTSA agreed with the petitioners that proposed changes to FMVSS No. 106 should be based on the most recent versions of the SAE standards instead of the older versions cited in the FMCSRs, the agency noted that a number of SAE's standards had been updated since the joint petition was filed. Accordingly, NHTSA proposed to rely on the most recent versions of the SAE standards.

Fourth, the agency did not propose to incorporate SAE standards relating to copper tubing, galvanized steel pipe, or end fittings used with metallic or non-metallic tubing. These materials are occasionally used in chassis plumbing and since these products are not considered to be brake hoses, NHTSA stated its belief that they are inappropriate for inclusion in FMVSS No. 106.

Fifth, NHTSA did not propose to incorporate the material and construction specifications for Type A and Type B tubing contained in SAE J844, *Nonmetallic Air Brake System Tubing,* and SAE J1394, *Metric Nonmetallic Air Brake System Tubing* because the agency tentatively concluded that incorporating those material specifications would be design-restrictive.

Sixth, NHTSA did not propose to incorporate the manufacturer identification requirements in SAE J1401, *Hydraulic Brake Hose Assemblies for Use with Nonpetroleum-Base Hydraulic Fluids,* because it tentatively concluded that the manufacturer identification requirements already present in FMVSS No. 106 are sufficient.

III. Summary of Comments

In response to the May 15, 2003 NPRM, NHTSA received comments from the following eleven organizations and companies: SAE International (SAE) and ASTM International (ASTM), which are automotive and industrial standards organizations; Intertek Testing Services (Intertek), a company that tests brake hoses and other products; and the following manufacturers of brake hose products; Goodyear Engineered Products (Goodyear), Dana Coupled Products (Dana), Saint-Gobain Performance Plastics (SGPPL), Degussa High Performance Polymers (HPP), Parker Hanifin Corporation and Atofina Chemical, Inc. (Parker/Atofina), SMC Corporation of America (SMC), and DuPont Engineered Polymers (DuPont).

Parker/Atofina submitted joint comments to the NPRM and are the successor companies to the parties to the joint petition for rulemaking submitted to NHTSA in 1998. Intertek Testing Services conducts laboratory testing of various products, including brake hoses, and also contracts with NHTSA to perform compliance testing of brake hoses. DuPont submitted comments on June 16, 2004, after the NPRM's comment closing date of July 14, 2003. However, NHTSA has fully considered DuPont's comments.

The commenters generally supported NHTSA's proposal to amend FMVSS No. 106 to include the latest requirements in the SAE brake hose standards for hydraulic, vacuum, and air brake hose and tubing. The commenters raised numerous technical issues, however. For many of proposed tests, commenters provided detailed information on test methods and procedures. The comments also generally supported NHTSA's proposal to specify requirements for plastic brake tubing, and plastic air brake tubing assemblies and end fittings.

IV. Agency Decision To Issue a Final Rule

In this document, NHTSA announces that it has decided to issue a final rule. We have made this decision after we

have thoroughly reviewed the public comments. We have made a number of changes in response to the comments. In the few instances where we did not adopt a comment, we explain why, in light of the need for safety.

We believe that the updated brake hose standard, which combines the most rigorous requirements of the latest SAE standards, and of FMVSS No. 106, meets the need for safety. Significant changes have been made to existing brake hose standards, with the effect of upgrading the performance requirements and test procedures relating to: (a) Hydraulic brake hose; (b) air brake hose; and (c) vacuum brake hose. In addition, we are establishing requirements more specifically tailored for plastic air brake tubing, plastic air brake tubing assemblies and end fittings. NHTSA seeks to ensure safe plastic air brake tubing, and plastic air brake tubing assemblies and end fittings.

In the following sections, we discuss the public comments to the NPRM, our response to the comments, and how (if this is the case) the proposed language in the NPRM has been amended in response to the comments.

V. Issues Raised by Commenters and NHTSA's Responses

A. Issues Relating to All Types of Brake Hose

1. Use of the Term ''Burst''

Intertek stated that several proposed requirements in the NPRM referred to the word ''burst'' and noted that ''burst'' was not defined in the proposed regulatory text. Intertek cited SAE J1401, stating that leaks or burst is ''loss of test fluid from the brake hose assembly other than by designated inlet(s) and outlet(s).'' NHTSA notes that in S4 of FMVSS No. 106, ''rupture'' is defined as any failure that results in separation of a brake hose from its end fitting or in leakage. In this final rule, NHTSA retains ''burst'' as a term that is presently used in FMVSS No. 106 to describe a required test or test pressures (as in, for example, a table of burst pressures). Whenever the performance requirement of a brake hose is specified, the word ''rupture'' has been substituted. This is consistent with existing FMVSS No. 106 text and avoids the need to add a definition of ''burst'' to S4.

2. Use of the Term ''Any''

SMC Corporation commented that S11.3 Test requirements (for plastic air brake tubing, plastic air brake tubing assemblies, and plastic air brake tubing end fittings) stating ''* * * capable of meeting *any* of the requirements'' should be changed to ''*all* of the requirements.'' [Emphasis added.] NHTSA is not making this recommended change. The term ''any'' has a very specific meaning in the Federal motor vehicle safety standards, including FMVSS No. 106. 49 CFR Part 571.4 specifies that ''(t)he word *any*, used in connection with a range of values or set of items in the requirements, conditions, and procedures of the standards or regulations in this chapter, means generally the totality of the items or values, any of which may be selected by the Administration for testing. * * * Thus, use of the term ''any'' has the effect of including all of the requirements.

3. Constriction Test Method

The constriction test is conducted to ensure the opening in the brake hose is large enough for the medium (*i.e.*, brake fluid or air) to flow through unimpeded. In the NPRM, NHTSA noted that while the existing FMVSS No. 106 includes constriction requirements, *i.e.*, requirements for minimum pass-through diameter, it does not specify a test procedure. The agency noted that two different constriction test procedures are available: A drop-ball test and a plug gauge test. The agency proposed to use a plug gauge method, similar to that in SAE J1401, that consists of a spherical end (sized at 64 percent of the brake hose nominal inside diameter for hydraulic brake hose and 66 percent of nominal inside diameter for air brake hose) with a shank and handle that can be inserted into the brake hose end fitting. The weight of the gauge is specified as two ounces, and this weight assists the passage of the spherical end through the fitting. The agency stated that it welcomed comments both on its proposal to specify a plug gauge test instead of a drop-ball test and on the differences between the plug gauge test specified in SAE J1401 and the one the agency proposed.

Goodyear commented on the proposed constriction test method for air brake hoses, and Dana similarly commented on the constriction testing for hydraulic brake hoses.

Goodyear stated that air brake hose manufacturing may result in curvature in the hose that could impede the gauge from fully entering the brake hose. The agency notes that the proposed regulatory text at S6.12 provided that the brake hose is held in a straight position to overcome such a problem. Holding the brake hose in a straight position allows the gauge to fully enter the brake hose. Goodyear stated that the general practice is to use the rolling ball test (also described in the NPRM, but not proposed as a test method), and recommended that the constriction test method be left to the discretion of the hose/assembly manufacturer. NHTSA notes that the rolling ball test is similar but not identical to the drop ball test. The drop ball test relies on the force of gravity for the ball to drop vertically through the hose; the rolling ball test relies on a side-to-side motion by the tester to go through the hose.

Dana agreed with the plug gauge test but recommended including the option of a drop ball test or an extended plug gauge for hose assembly end fittings that by design do not offer a passage through which a plug gauge can be readily inserted. Dana stated that either the extended plug gauge or the rolling ball would permit constriction inspection without cutting the hose.

In response to the comments about the drop ball test vs. the extended plug gauge test, NHTSA begins by noting that S5.3 *Test requirements* in both the existing FMVSS No. 106 and proposed regulatory text for FMVSS No. 106 indicate that a hydraulic brake hose is only subjected to one of the test conditions in S5.3.2 through S5.3.11 (existing text) or through S5.3.13 (proposed text) after having met the constriction test requirement in S5.3.1. There is a similar provision for air brake hoses in S7.3 *Test requirements.* Thus, each brake hose tested to any of the conditions in FMVSS No. 106 would first be inspected for constriction test compliance. If the end fittings or other features of the brake hose do not permit the plug gauge to be used, or would require cutting of the brake hose or end fitting to do so, then constriction testing cannot be conducted prior to one of the other performance tests. Therefore, NHTSA is including the drop ball test in the final rule to provide NHTSA and the manufacturers an alternative to the plug gauge test. In addition, the use of an extended length plug gauge is also included for similar reasons. This will provide some flexibility in the constriction test method for the variety of end fittings likely to be encountered in compliance testing. None of these provisions would preclude a brake manufacturer or assembler from using other means to perform constriction testing, since the purpose of the constriction test is to verify the final inside diameter of a brake hose assembly in a pass-fail manner.

4. Specification of Ozone Concentration

Many commenters noted an incorrect specification of ozone concentration in the preamble to the NPRM, where the

units ''parts per million'' were stated, rather than the correct ''parts per hundred million.'' The agency agrees that this was an oversight, and notes that a change to the regulatory text is not needed, as the proposed text specified the correct units.

B. Hydraulic Brake Hoses

1. General Hydraulic Brake Hose Comments in Response to the NPRM

In general, the commenters agreed with the agency's proposal to upgrade the hydraulic brake hose requirements in FMVSS No. 106 to those requirements in SAE J1401. In the NPRM, the agency proposed to keep all hydraulic brake hose requirements in one section, rather than creating separate categories of brake hoses for commercial vehicles and non-commercial vehicles. Dana stated that it agrees with this position, and does not see this as burdensome to the industry as a whole, as most brake hose manufacturers and light vehicle original equipment manufacturers (OEM) requirements currently exceed the SAE specifications. Goodyear stated that it currently brands, tests, and certifies its brake hoses to both FMVSS No. 106 and SAE requirements.

Parker/Atofina was the only commenter to oppose the upgrade in performance standards for all hydraulic brake hoses, stating that hydraulic brake hoses used on recreational boat trailers, motorcycles, all-terrain vehicles (ATVs), snowmobiles, and off-road tractors/trailers and farm implements do not require the same level of severe service performance requirements. NHTSA notes that of the vehicle types listed by Parker/Atofina, the upgraded requirements would only apply to ''motor vehicles,'' (*i.e.*, boat trailers and on-road motorcycles). The other vehicle types are not ''motor vehicles'' regulated by NHTSA. Parker/Atofina also asserted that the FMVSS No. 106 upgrade for all hydraulic brake hoses is unnecessarily cost prohibitive, but provided no cost data for the agency to evaluate.

NHTSA is not adopting Parker/Atofina's recommendation because NHTSA does not wish to create separate categories of hydraulic brake hose (*e.g.*, ''commercial'' and ''non-commercial.'') To avoid brake system failures caused by brake hose ruptures, we believe there is a safety need for all motor vehicle brake hose to meet rigorous performance requirements.

2. Hydraulic Brake Hose Manufacturer Identification Requirements

Parker/Atofina requested that the agency incorporate into FMVSS No. 106 the full manufacturer identification requirements as provided in SAE J1401. Parker/Atofina states that the agency may not realize that hydraulic brake hoses as defined in SAE J1401 more clearly describe the performance, markings, and requirements for hydraulic brake hose compared with those currently existing in FMVSS No. 106.

In response, NHTSA notes that the requirements for hose manufacturer identification in SAE J1401 are that the hose shall be either embossed or imprinted (three-dimensional) on the brake hose cover with the manufacturer's name, or employ the market yarn color scheme (Appendix A) as registered with the Rubber Manufacturers Association. In addition, the marker yarn color scheme or name trademark on the brake hose cover shall be registered with the SAE. SAE J1401 does not include any provision for a brake hose assembler to add identifying markings to the end fittings or by means of a band placed around the brake hose assembly; only requirements for the manufacturer of the brake hose material are specified.

NHTSA further notes that the FMVSS No. 106 requirements for hydraulic brake hose manufacturer or assembler identification are specified in S5.2 *Labeling.* The brake hose manufacturer's designation (symbol, text, *etc.*) is registered with NHTSA and labeled on the outside of the hose. The brake hose assembler's designation is included on a band placed around the brake hose assembly, or may be stamped into an end fitting. Labeling exceptions are provided for brake hose assemblies included as part of a newly-manufactured vehicle. For these reasons, NHTSA determines that the current labeling requirements fully meet the agency's needs for identifying the manufacturers of brake hose or brake hose assemblers. Therefore, in this final rule, NHTSA will not require any additional labeling or manufacturer identification requirements for hydraulic brake hoses.

3. Expansion and Burst Strength (Volumetric Expansion) Test

NPRM—The expansion test is conducted at test pressures of 1,000 psi and 1,500 psi and is followed by a burst strength test. NHTSA proposed to add language to S5.3.2 specifying that after the hydraulic brake hose assembly withstands water pressure of 4,000 psi for two minutes without rupture, it must ''not rupture at less than 7,000 psi for 1/8 inch, 3 mm, or smaller diameter hose, or at less than 5,000 psi for a hose with a diameter larger than 1/8 inch or 3mm (S6.).''

Public Comments and NHTSA Response—Goodyear indicated that in addition to the expansion test pressures of 1,000 psi and 1,500 psi, SAE J1401 includes a third test at a higher pressure of 2,900 psi, and recommended that it be added to FMVSS No. 106.

In considering this issue, we note that it was an oversight not to include the third pressure in the NPRM. We did, however, explain that we were generally proposing to incorporate those SAE J1401 requirements that are more rigorous than FMVSS No. 106. We therefore believe it is reasonable to add this pressure for the final rule. We are therefore adding the third test at 2,900 psi to S5.3.2 and to Table 1.

We note, however, that SAE J1401 does not include any expansion requirements for the larger, ¼ inch and 6 mm brake hose sizes that are included in FMVSS No. 106. Further, the agency is not able to extrapolate the existing values in FMVSS No. 106, Table 1, *Maximum Expansion of Free Length Brake Hose,* to determine what expansion limits would be appropriate for the larger brake hose sizes tested at the 2,900 psi expansion test. We are therefore not including at this time expansion requirements for the larger brake hose sizes tested at the 2,900 psi expansion test.

Intertek stated that for the final burst strength requirement in the expansion and burst strength tests, the proposed regulatory text included a 7,000 psi burst strength for ⅛ inch, 3 mm or smaller diameter brake hoses, and a 5,000 psi burst strength for 3/16 inch, 4 mm, or larger diameter brake hoses. Intertek noted that this does not include a defined specification for those brake hoses with diameters falling between ⅛ inch and 3/16 inch, or between 3 mm and 4 mm. To clarify this issue, in the final rule, the agency has changed the regulatory text to state that brake hoses with diameters greater than ⅛ inch or 3 mm shall not rupture at less than 5,000 psi.

4. Tensile Strength

NPRM—NHTSA proposed that the SAE J1401 fast-pull test and 370 pound strength requirement be incorporated into FMVSS No. 106. The agency also proposed to update the ASTM reference for tension testing machines to the latest version of the standard practice.

The agency notes that in the NPRM, the water absorption and tensile strength requirements were labeled as S5.3.5. However, S5.3.5 as currently specified in FMVSS No. 106 are the water absorption and burst strength

requirement test. In this final rule, NHTSA corrects the error. The water absorption and tensile strength requirements are at S5.3.6.

Public Comment and NHTSA's Response—At S6.4 of FMVSS No. 106, the tensile strength test procedures are specified. ASTM commented that the latest version of ASTM standard E 4 *Standard Practices for Force Verification of Testing Machines* was E 4–02. In preparing this final rule, NHTSA determined that E 4 has been revised to E 4–03. NHTSA is therefore incorporating by reference ASTM standard E 4–03 into FMVSS No. 106 at S6.4.

5. Water Absorption and Pressure Test, Tensile Strength, and Whip Resistance

NPRM—NHTSA did not propose any changes to the existing water absorption requirements of FMVSS No. 106 but did propose to incorporate SAE J1401's fast-pull test and 370-pound strength requirement into Standard No. 106's tensile strength test procedure. Accordingly, after being conditioned in water for 70 hours, hydraulic brake hose assembly would be required to meet these heightened tensile strength requirements.

The agency stated that the immersion of the brake hose in water for 70 hours as specified in S6.5 of FMVSS No. 106 is the same as that specified in SAE J1401. However, while the time specification of 70 hours is the same, the preparation of the brake hose specimen and the water soak method are different between the two standards. The preparation in FMVSS No. 106 specifies removal of 1 ⅛ inches of outer brake hose cover (if present) at the center of the brake hose, without damage to any reinforcing material. Brake hoses tested to SAE J1401 do not have any cutting of the hose. Another difference between SAE J1401 and FMVSS No. 106 is that FMVSS No. 106 specifies soaking the brake hose in distilled water at room temperature (75 degrees Fahrenheit) while J1401 specifies an elevated water temperature of 185 degrees Fahrenheit.

Public Comments and NHTSA Response—Intertek commented that water temperature is not a great factor regarding the degradation of brake hoses, but that removal of the outer cover may influence the test results because of the possibility of damage to the reinforcing braid when the cover is cut. Goodyear stated that the SAE J1401 procedure was developed to eliminate the potential of yarn damage that may occur when the outer cover of the brake hose is removed by cutting. Goodyear recommended that the water soak procedure in SAE J1401 be used in FMVSS No. 106. Dana noted the discrepancies in the two standards, and stated that it prefers the SAE procedure because it is easier for the technician to perform and has less risk of inadvertent damage to the brake hose. Further, Dana stated its belief that the results of the SAE J1401 and FMVSS No. 106 test methods are similar although the comparison data is about a decade old.

NHTSA agrees with the commenters that by using the SAE J1401 water soak procedure, the likelihood of unintended damage to the brake hose during the process of removing the cover will be eliminated. Thus, in the final regulatory text, NHTSA adopts the water soak procedure in SAE J1401.

6. Low Temperature Resistance Test

NPRM—NHTSA did not propose any changes in Standard No. 106's low temperature resistance requirements/procedures.

Public Comments and NHTSA's Response—Dana and Goodyear stated that while FMVSS No. 106 specifies a temperature of minus 40 degrees Celsius, SAE J1401 specifies a lower temperature range of minus 45 degrees Celsius to minus 48 degrees Celsius. Both Dana and Goodyear recommended the use of the lower test temperature as better reflecting the capabilities of the materials used in current day brake hoses.

In the final rule, NHTSA adopts the lower temperature specification recommended by Dana and Goodyear and as provided in SAE J1401.

7. Brake Fluid Compatibility, Constriction, and Burst Strength

NPRM—In the NPRM, NHTSA proposed to use the latest SAE reference RM brake fluid for the brake fluid compatibility test. Because the RM–66–05 fluid has superseded the RM–66–03 fluid, NHTSA did not propose any change in the type of fluid specified for conditioning the hose. NHTSA proposed, however, to increase the conditioning temperature in FMVSS No. 106 to 248 degrees Fahrenheit.

Public Comments and NHTSA's Responses—Goodyear indicated in its comments that the NPRM language regarding compatibility fluid was incorrect with respect to the version of the SAE compatibility fluid referenced in the existing FMVSS No. 106 and SAE J1401. NHTSA notes that SAE RM–66–04 is currently referenced in FMVSS No. 106, and SAE RM–66–05 is referenced in SAE J1401 (June 2003). The agency correctly identified the compatibility fluid in the proposed regulatory text as SAE RM–66–05 and therefore will make no change in the final rule.

Goodyear recommended that FMVSS No. 106 reference the latest or current SAE fluid and not cite the specific version (*e.g.*, –04 or –05). NHTSA will not adopt this recommendation. NHTSA will maintain the current system of referencing a specific version of the compatibility fluid, and perform periodic rulemaking as new versions of the test fluid are developed. In this way, the public will have an opportunity to comment on new versions of the compatibility fluid before it is incorporated by reference into FMVSS No. 106.

8. End Fitting Corrosion Resistance

NPRM—Instead of referencing either ASTM B117–64 or ASTM B 117 Appendix B, both of which are outdated, NHTSA proposed to change the reference in FMVSS No. 106 to the most recent set of ASTM specifications for salt spray chambers, which are found in ASTM B117–97. NHTSA did not propose any other changes to the end fitting corrosion resistance requirements/procedures in FMVSS No. 106.

Public Comment and NHTSA Response—ASTM commented that the latest revision of ASTM standard B 117 *Standard Practice for Operating Salt Spray (Fog) Apparatus* is B 117–02. In preparing this final rule, the agency determined that B 117 has been revised to B 117–03, and is incorporating B 117–03 in FMVSS No. 106 at a new S6.11, *End fitting corrosion test.* There are no substantive differences between B 117–02 and B 117–03.

9. High Temperature Impulse Test

NPRM—NHTSA proposed incorporating the high temperature impulse test from SAE J1401 into FMVSS No. 106.

Public Comment and NHTSA Response—Goodyear noted that in the NPRM's preamble, the text incorrectly stated that the impulse test is conducted in an air chamber at 259 degrees Fahrenheit, while the correct specification is 295 degrees Fahrenheit. No change is needed to the final rule regulatory text, as the correct temperature was specified in the NPRM's draft regulatory text.

C. Air Brake Hoses

1. Construction and Labeling

NPRM—NHTSA proposed that plastic air brake tubing be regulated in its own section in FMVSS No. 106 since it differs significantly in construction and material properties from elastomeric

rubber hoses. Therefore, NHTSA proposed that any references to synthetic or natural elastomeric rubber be deleted from S7 *Requirements—Air brake hose, brake hose assemblies, and brake hose end fittings* of FMVSS No. 106 since it will no longer be necessary to differentiate rubber hoses from plastic tubing in S7 and S8. The proposed text in the NPRM also removed references to ''outside diameter (OD)'' from S7 and S8 of FMVSS No. 106 since OD measurements are generally only applicable to tubing, which NHTSA proposed to address in the new section for plastic tubing.

NHTSA also proposed to specify in S7.2.1(e) of FMVSS No. 106 the labeling scheme that is to be used for air brake hose that meets the dimensional requirements of more than one type of end fitting (A, AI, or AII). The proper labeling of such hose has been addressed in several of the agency's legal interpretation letters, and including this language in FMVSS No. 106 would serve to minimize confusion on this issue. The proposed text also stated that a hose intended for use with more than one type of end fitting may be labeled as such, but is not required to be so labeled. This provides flexibility for hose manufacturers to determine how they intend their hoses to be used, and would not require them to label hoses for multiple end fitting designations unless they so desire.

Public Comments and NHTSA's Response—The SAE and Parker/Atofina stated that it is necessary to keep the references to synthetic or natural rubber in order to clearly indicate that the fittings intended for use with rubber air brake hose are not to be used with any type of plastic hose (which is similar to plastic tubing but is sized by inside diameter rather than outside diameter). Based upon the comments received, the agency determines that retaining the references to rubber provides beneficial information regarding the use of these brake hoses, and is retaining the existing FMVSS No. 106 language in the final rule.

Comments from the SAE and Parker/Atofina describe the differences in the three types of air brake hose designated as Type A, Type AI, and Type AII. The SAE suggested notes for Table III describing the application of reusable and permanent crimped fittings to each type of hose. The SAE also recommended that the dimensional requirements for Type A hose for use with both reusable and permanent fittings be included in Table III. Parker/Atofina also recommended that the correct dimensions for Type A, AI, and AII hose be included in FMVSS No. 106, and that FMVSS No. 106 should conform to the specifications in SAE J1402 for these dimensions.

Historically, NHTSA has declined to specify dimensions of end fittings, as there are too many different end fitting thicknesses and too many different types. NHTSA notes that the industry has standardized brake hose end fittings. Therefore, on the issue of dimensional requirements for air brake hose intended for use with permanently attached fittings, NHTSA has stated its belief in the May 15, 2003 NPRM and in other rulemaking documents that it was not necessary to include those dimensional requirements in FMVSS No. 106. In the May 15, 2003 NPRM, NHTSA also stated that it believes that many of the brake hose assemblers are truck repair facilities that may be assembling brake hoses with permanently attached end fittings. It follows that these truck repair facilities must pay attention to the type of air brake hose being assembled, to ensure that the hose and end fitting are compatible. In the NPRM, NHTSA stated that it believes that air brake hose conforming to SAE J1402 is presently in use because of FMCSR requirements at 49 CFR 393.45.

Regarding metric sizes of air brake hose, in the NPRM, NHTSA noted that dimensions for metric air brake hoses are not included in FMVSS No. 106, and solicited comments on the dimensions for metric air brake hose (for use with permanently attached, or reusable end fittings) that may be appropriate to include in FMVSS No. 106. Since it received no comments on this subject, NHTSA will not include metric air brake hoses in Table III.

In the final rule, the agency is adopting the dimensional requirements for Type A air brake hose in Table III, as recommended by the SAE and Parker/Atofina, and is including the suggested notes for Table III. Table III's title, and its reference in S7.1, *Construction*, are changed to no longer reference ''reusable'' end fittings because, as the SAE indicates, the air brake hose in the table may be used with either reusable or permanent fittings. The agency concludes that it is also appropriate to slightly revise the regulatory text for S7.2.1(e) in *Labeling* to indicate that the markings on the air brake hose directly relate to its type as specified in Table III. As metric air brake hose is not included in Table III, the agency is specifying that it continue to be designated with the letter ''A.''

NHTSA proposed in the brake hose labeling requirements in S7.2.1(e), a labeling provision for brake hoses manufactured for use with more than one type of end fitting, *e.g.*, AI and AII. Upon further review and in light of the comments from the SAE and Parker/Atofina, NHTSA now believes that no such applications exist, because of the large differences in outside diameters between, for example, Type AI and Type AII brake hose. For these reasons, the multiple labeling provisions proposed in the NPRM are removed in the final rule.

2. High Temperature Resistance

NPRM—The high temperature resistance test for air brake hose ensures that there are no cracks or disintegration due to proximity to high temperatures of vehicle components such as engines and transmissions. NHTSA proposed that FMVSS No. 106 adopt the smaller radii test cylinders from SAE J1402 and, for ⅛ inch and 3 mm, 4 mm, and 5 mm hose, NHTSA proposed that the test cylinder radius of 1 inch as specified in SAE J1402 for 3⁄16 inch hose also be used for these hose sizes. As currently indicated in Table IV of FMVSS No. 106, the larger metric sizes of hose (6 mm and above) numerically correspond closely to inch sizes of hose, for example, 6 mm (0.236 inch) is very close to ¼ inch (0.250 inch). Accordingly, NHTSA proposed to apply the test cylinder values from SAE J1402 to metric sizes of hose as currently specified in Table IV of FMVSS No. 106. As to SAE J1402's exclusion of fabric-covered air brake hose from the external inspection requirement, NHTSA disagreed that external inspection of such hose is impractical and, therefore, did not propose to incorporate SAE J1402's exclusion.

Public Comments and NHTSA's Response—The SAE and Parker/Atofina provided similar comments regarding the proposed test cylinder radii that NHTSA raised in the NPRM. The test cylinder radii were proposed to be decreased from the current values in FMVSS No. 106, Table IV, to smaller values from SAE J1402, Table 4—*Radius for High Temperature Resistance Test (small radius)*. For example, the test cylinder radius for a ⅜-inch air brake hose in existing FMVSS No. 106 is 3½ inches while the test cylinder radius in SAE J1401 for the high temperature resistance test is 1¾ inches, or one-half the size.

The SAE and Parker/Atofina stated that SAE J1402 is going to be revised to remove the small radius test cylinders from the high temperature resistance test. However, in this final rule, the agency is making FMVSS No. 106 consistent with the current version of SAE J1402, but will be willing to

consider future alignments between the two standards in future rulemaking.

The agency also notes that in the NPRM, the incorrect value of 3 inches for the large test cylinder was specified for ⅜ inch hose. NHTSA has corrected the value to 3½ inches in this final rule.

NHTSA notes that in the NPRM, incorrect test cylinders were included in the proposed Table IV for the adhesion test of wire-reinforced hose. The agency stated that the values from SAE J1402, Table 4, should be used (small radius), while in fact SAE J1402 references the radii in Table 1 for this test (large radius). In the final rule, NHTSA retains the correct test cylinder values without change.

Comments from the SAE and Parker/Atofina note that the ⅛ inch size of air brake hose is not produced, therefore, the test cylinder specification for that size hose is not needed in Table IV of FMVSS No. 106. The agency agrees and in the final rule, removes references to ⅛ inch size of air brake hose from Table IV.

As currently stated in FMVSS No. 106, the required performance of a brake hose after being subjected to the test requirements in the high temperature test is that the brake hose shall not show external or internal cracks, charring, or disintegration visible without magnification. Under the high temperature resistance requirements in SAE J1402, the external surface of fabric-covered hoses is excluded from this inspection, stating that visual inspection is not practical. The agency proposed in the NPRM to keep the requirements in FMVSS No. 106 for external inspection and not include the SAE J1402 exclusion. Both the SAE and Parker/Atofina commented that the SAE J1402 exclusion be kept in place. SAE commented that for hoses covered with a textile braid (fabric-covered), this braid does not show cracks from exposure to ozone nor does it crack due to the high temperature test.

NHTSA does not understand the need to exclude external inspection of the hose if, as Parker/Atofina and the SAE comments indicate, those hoses with textile braid covering will not crack. The inspection is visual, and does not require special equipment or magnification, nor does it require removal of the fabric covering to inspect the hose beneath it. By having such an exclusion, conceivably, a fabric-covered brake hose that did show external cracks would be considered to have passed the test. NHTSA does not believe there is any reason to add the exclusion for external inspection. Further, the agency is specifying only the larger test cylinder sizes for this test, and this should further minimize the likelihood of failure compared to the requirements currently in SAE J1402.

3. Low Temperature Resistance

NPRM—NHTSA proposed that the internal surface inspection of air brake hose, as specified in SAE J1402, be incorporated into FMVSS No. 106. However, the agency did not propose to incorporate SAE J1402's exclusion of fabric-covered air brake hose from external inspection.

Public Comments and NHTSA's Response—The SAE and Parker/Atofina commented that the ⅛ inch size of brake hose does not need to be included in Table IV of FMVSS No. 106. NHTSA agrees and has removed the ⅛ inch size of brake hose from Table IV in the final rule. Both SAE and Parker/Atofina also asked that the external inspection of the hose for cracks excluded fabric-covered hoses, but for the same reasons as described in the discussion on high temperature test requirements, NHTSA does not include this exemption in the final rule.

4. Ozone Resistance

NPRM—Since NHTSA proposed that the ozone concentration for hydraulic brake hose be changed from 50 pphm to 100 pphm, NHTSA proposed to specify the higher ozone concentration (100 pphm) for air brake hose as well. The agency tentatively concluded it is appropriate to specify the same concentration of ozone for testing all types of brake hoses.

Public Comments and NHTSA's Response—SAE, Parker/Atofina, and Goodyear correctly indicated that the proposed ozone concentration should be specified as 100 parts per hundred million, not by parts per million. The correct concentration (100 parts per hundred million) is specified in this final rule.

NHTSA notes that in the NPRM, the ozone test for air brake hose was incorrectly identified as S8.14. A new section of FMVSS No. 106 for the ozone resistance test is not needed since the ozone test is already included in S8.4. In this final rule, the ozone test is correctly identified as S8.4. Thus, the constriction requirements that were proposed to be in S8.15 are now in S8.14.

5. Adhesion

NPRM—NHTSA proposed to incorporate the SAE J1402 adhesion test for wire-reinforced air brake hose into FMVSS No. 106, with the exception of the steel ball sizes as discussed below. Also, to incorporate SAE J1402's specifications into FMVSS No. 106, NHTSA proposed that rather than specifying steel ball diameters for each hose size, the steel ball should be specified as having a diameter that is 75 percent of the nominal inside diameter of the hose. This would allow for testing of any and all sizes of hose.

The agency also proposed to specify use of a plug gauge rather than a steel ball for constriction testing of other types of hose to which FMVSS No. 106 applies. For the adhesion test, however, it would not be possible to use a plug gauge because the hose is closed off at both ends during the test. Accordingly, NHTSA proposed to specify the use of a steel ball to test air brake hose for adhesion. Finally, the agency proposed to update the ASTM tension testing machine reference in S8.9 from the 1964 version currently in FMVSS No. 106 to the latest revision of that standard, *Standard Practices for Force Verification of Testing Machines*, Designation E4–99.

Public Comments and NHTSA's Response—The SAE and Parker/Atofina commented that they prefer the 73 percent of nominal inside diameter specification, which would allow the use of standard size test balls. Also, the size difference between a 73 and 75 percent ball size is small (0.008 inches for a 13/32-inch brake hose). NHTSA agrees that the difference is not significant and adopts the 73 percent requirement in the final rule.

NHTSA also notes that the incorrect test cylinder radii were proposed for the adhesion test of wire-reinforced air brake hose. The small test cylinders from SAE J1402 Table 4 were proposed in the NPRM, but the correct radii from SAE J1402 Table 1 are included in this final rule.

6. Air Pressure (Leakage)

NPRM—The SAE J1402 specifications for hose leakage are more severe than those presently in FMVSS No. 106. NHTSA proposed incorporating the flexure/pressure test from SAE J1402 into FMVSS No. 106, with some modifications. NHTSA noted that the test procedure in SAE J1402 includes tolerances on the pressure requirements for determining whether the hose leakage rate is acceptable upon completion of the flexure test. The agency described how, if these tolerances were applied in various manners, it may not be possible to determine the pass/fail performance of a brake hose during a test.

Therefore, in the NPRM, we proposed an alternative, to modify the requirements to ensure there would be a pass or fail criterion. NHTSA also proposed to modify SAE J1402's test

procedures by specifying the thickness of the orifice during the final leak check. The thickness of the orifice, and not only the diameter of the orifice, affects the rate at which air can be supplied to the hose. The rate at which air is supplied to the hose would be critical if a small amount of hose leakage is present during the final leakage test. NHTSA proposed specifying an orifice thickness of 0.032 inches (1/32inch), which is the same thickness specified for the orifice in FMVSS No. 121 at S5.3.5, *Control signal pressure differential for converter dollies and trailers designed to tow another vehicle equipped with air brakes*. NHTSA tentatively concluded that this proposed orifice dimension would supply air at a greater rate than any thicker orifice while still providing sufficient mechanical strength to withstand the test conditions.

The agency proposed to adopt the lowest test pressure (140 psi) in the brake hose during the leakage test from the range provided in SAE J1402 (140 to 160 psi). The applied supply pressure to a restrictive orifice was proposed to be at the midpoint of the pressure range, 150 psi. Thus, the supply pressure exceeds the required pressure that is to be maintained in the brake hose, allowing a small amount of leakage to be present, but not permitting excessive leakage to be present.

Public Comments and NHTSA's Responses—The SAE and Parker/Atofina both stated that the agency is proposing to change the SAE test, creating a new requirement. The commenters stated that it does not reflect good test methodology to require 150 psi supply pressure with no tolerance, or 140 psi with no tolerance in the brake hose within the two minute period. However, neither commenter recommended an alternative to NHTSA's proposal, other than to adopt the exact procedure in SAE J1402. Both commenters stated that the agency's proposal to adopt a thickness requirement for the orifice has some technical value.

While the agency has considered the comments, the commenters did not provide recommendations as to test pressures that the agency could adopt in the final rule. The agency believes that by specifying the minimum required pressure of 140 psi in the brake hose, while supplying air at the mid-point pressure of 150 psi through an orifice of minimal thickness that is least restrictive to air flow, a reasonable balance in test conditions is achieved. Therefore, NHTSA is making final the air pressure (leakage) test that it proposed in the NPRM.

NHTSA believes that measuring the leakage using a mass flow meter, as is done for test leaks of plastic air brake tubing, may be preferable to the method in this final rule. NHTSA may consider raising this issue in a future rulemaking.

7. Tensile Strength

NPRM—As currently in effect, FMVSS No. 106 includes different tensile strength requirements for air brake hoses if those hoses are used: (a) Between the vehicle frame and axle, or between a towing and towed unit; or (b) in any other application. The tensile strength requirements for brake hose assemblies in the former case are significantly higher than those requirements in the latter case. Because the agency proposed separate requirements for plastic tubing in a new section of FMVSS No. 106, NHTSA proposed to delete the lower tensile strength limits for hoses that are used for purposes other than connections between a frame and axle or between a towed and towing unit, and require the higher tensile strength requirements for all brake hoses. SAE J1402 only includes the higher tensile strength requirements.

The agency proposed that all rubber brake hoses meet the requirements for a hose that is used between a frame and an axle or between a towed and a towing unit. NHTSA tentatively concluded that rubber hoses are no longer used extensively for other purposes on heavy vehicles, as plastic tubing is used for most chassis plumbing of air systems. NHTSA tentatively concluded that these rubber hoses are of sufficient diameter to have the mechanical strength to meet the higher, frame-to-axle tensile strength requirements. NHTSA also solicited comments on any alternate tensile strength requirements that might be appropriate for rubber hoses.

Public Comments and NHTSA's Response—The SAE recommended that the SAE J1402 tensile strength testing be adopted. SAE did not elaborate on its recommendation. Parker/Atofina recommended keeping the current FMVSS No. 106 requirements with the high and low tensile strength requirements depending on application of the hose assembly. Parker/Atofina stated that the lower tensile strength requirements are still used in applications other than connections between a towed and a towing unit, and to raise these requirements to the higher tensile strength would add significantly to hose cost. No cost data was provided for the agency to evaluate.

In evaluating the tensile strength test requirements, NHTSA notes that it proposed different tensile strength requirements for plastic air brake tubing depending on the application of the product (*e.g.*, between towing and towed unit, or in chassis plumbing applications), based on the current tensile strength requirements for air brake hoses in S7.3.10 of FMVSS No. 106. The reason for the different strength requirements is to accommodate different styles of end fittings. Thus, the end fittings for a brake hose or plastic tubing used between a towing and towed vehicle provide the highest tensile strength possible to prevent separation of the end fittings. In other applications, such as chassis plumbing, lower tensile strength requirements apply that permit the use of fittings designed for ease of assembly on chassis plumbing (such as push-to-connect fittings used with plastic tubing).

NHTSA did not believe that air brake hose is for chassis plumbing (having been replaced by plastic tubing) and therefore proposed to delete the lower tensile strength requirements for this type of brake hose. Parker/Atofina however, states that this is not the case, and the agency believes that Parker/Atofina is referring to the higher cost of high-strength end fittings and/or the longer assembly time required for these fittings. Therefore, in this final rule, the agency is not deleting the lower tensile strength requirements for end fitting retention for air brake hose, to avoid changes to vehicle manufacturing in situations where this type of air brake hose is used for chassis plumbing. The end fitting tensile strength requirements will therefore be similar for air brake hose and plastic air brake tubing.

8. Minimum Bend Radius

NPRM—NHTSA tentatively concluded it would not be appropriate to add SAE J1402 requirements for minimum bend radius to FMVSS No. 106 because FMVSS No. 106 regulates the properties of brake hoses as stand-alone motor vehicle equipment rather than use requirements. NHTSA did not propose to include a reference to the minimum bend radii from Table 1 in SAE J1402 as the minimum installation bend radii for brake hose as installed on vehicles.

Public Comments and NHTSA's Response—Both the SAE and Parker/Atofina asked that the minimum bend radii from Table 1 in SAE J1402 as the minimum installation bend radii for brake hose installed on vehicles be included to benefit users (installers) of the brake hose. The agency notes that in Section 3.3.1 of J1402, smaller installation radii may be appropriate for

some brake hoses. Therefore, in the final rule, NHTSA is not specifying installation bend radii. NHTSA believes individual brake hose manufacturers are in the best position to determine minimum bend radii for hose to be installed in motor vehicles.

D. Vacuum Brake Hoses

1. Swell (Fuel Resistance)

NPRM—NHTSA proposed that Reference Fuel B as specified in SAE J1403 be used for the swell test in FMVSS No. 106. NHTSA also proposed that the plug gauge method (in lieu of the steel drop-ball method) be kept in place in TP–106 for swell testing of vacuum brake hoses.

NHTSA proposed that the specifications of FMVSS No. 106 and SAE J1403 be combined as follows. Following the fuel conditioning using Reference Fuel B and the constriction test, each vacuum hose would be subjected to a vacuum of 26 inches of Hg for ten minutes, with no visible collapse or leakage of the hose permitted (as currently specified by FMVSS No. 106). Then, for hoses constructed of two layers or more, a layer adhesion test would be conducted with a specified performance of 8 pounds-per-inch minimum separation force (as specified by SAE J1403). NHTSA proposed that this adhesion test only be applied to multi-layer hoses for two reasons. First, the agency tentatively concluded that single layer hose cannot be tested easily. Second, NHTSA tentatively concluded that single layer hose that have lost mechanical integrity would not be able to pass the visual collapse or no leakage specification during the vacuum test and, as such, failure would already be detected prior to completion of the vacuum test.

NHTSA also proposed to update the ASTM test procedure referenced in S10.7 for the swell test to the current revision, D471–98e1.

Public Comments and NHTSA's Response—Goodyear supported the current SAE J1403 test sequence consisting of fuel soak, restriction (constriction) ball test, vacuum collapse test, and layer adhesion test with a minimum separation strength of 6 pounds per inch. Goodyear commented that the agency's proposed plug gauge for constriction testing, shown as Figure 4, has only three inches of length and would not be able to pass through a test sample of vacuum hose that is 12 inches in length. Further, the vacuum brake hose may have some curvature that would not permit a straight gauge to pass through it. For these reasons, Goodyear recommended that a rolling ball be used to verify the internal dimensions of vacuum brake hose during the swell test.

In responding, the agency begins by noting that pre-formed vacuum brake hoses would have significant curvature molded into them, and standard vacuum brake hose may also have some natural curvature as described by Goodyear. NHTSA also notes that in the existing and proposed FMVSS No. 106 regulatory text, the method of verifying the inside diameter of the vacuum brake hose is not provided. As noted in the NPRM, the method is identified as a plug gauge in the agency's current test procedure, TP–106. For the final rule, the agency has decided to provide the option of using a drop ball for both constriction tests and verification of the inside diameter during the swell test, and to also permit the use of a standard plug gauge or an extended length plug gauge. The fact that several options are provided to brake hose manufacturers is consistent with constriction testing for other types of brake hoses in FMVSS No. 106, where more than one method may be employed (by NHTSA and brake hose manufacturers) due to the variety of end fitting designs that may preclude the use of the plug gauge. In this final rule, NHTSA is incorporating into FMVSS No. 106 the three constriction test methods to be used in the swell test.

In the NPRM, NHTSA proposed an adhesion strength test requirement of 8 pounds per inch. Goodyear stated that the value should be 6 pounds per inch, as stated in SAE J1403. The correct value of 6 pounds per inch adhesion strength requirement is in this final rule.

E. Plastic Air Brake Tubing

1. General Comments

In the NPRM, NHTSA stated that plastic air brake tubing is generally manufactured from nylon but the generic term, ''plastic'' is used to account for other types of plastic that may be used for air brake tubing. The comments on the proposal for requirements for plastic air brake tubing, plastic air brake tubing assemblies, and plastic air brake tubing end fittings fell into two groups: (a) Manufacturers currently manufacturing air brake tubing from polyamide (nylon) requesting that this material specification be included in FMVSS No. 106; and (b) manufacturers that may be considering manufacturing air brake tubing from materials other than nylon, that did not support including this material specification (plastic) in FMVSS No. 106.

Parker/Atofina stated that by not including additional material property tests into FMVSS No. 106, there would be insufficient safeguards for the performance of alternate tubing made from unproven and unspecified polymers that would create a significant product design risk. It also stated that the material specification of generic nylon is not design restrictive, but offers thermoplastic tubing manufacturers great latitude in product design options.

SMC stated that not including the material specification in FMVSS No. 106 leads to an issue that is being addressed in the SAE committee that is responsible for SAE J2547, *Alternate Nonmetallic Air Brake System Tubing.* Namely, the test should be application specific and not a material validation test like the burst pressure test in SAE J844. Different tube material may affect the retention of the tubing in the fitting per the SAE J1131 requirements. Until further evaluation is conducted on the new tubing materials with all fitting supplied in the industry, leaving the material open to the tubing manufacturers' discretion may lead to problems with the tube connection.

HPP stated that SAE J844 takes into account that the materials are polyamides. To exclude this requirement, additional tests would need to be introduced to ensure that long-term properties of tubing made from other materials meet the in-use requirements. HPP cited, for example, that there is no requirement for a high-temperature burst test at elevated pressures, while polyamides are known to possess the long-term properties for this requirement.

DuPont stated that the agency correctly points out in the NPRM that a material and construction specification is design restrictive. It notes that while polyamides used under SAE J844 have performed with an admirable safety record, it has a negative impact on innovation and commerce. DuPont also encouraged the elimination of any reference to specific types of construction, specifically regarding Type A (unreinforced) and Type B (reinforced) tubing. DuPont stated that any style of construction that passes the rigorous test procedures and dimensional requirements set forth in the proposal should be permissible.

In this final rule, NHTSA has decided to keep the generic terminology of plastic air brake tubing, rather than adopt the specification for nylon (polyamide) material. Regarding concerns that materials other than nylon might be inferior when used in air brake tubing, NHTSA notes that it proposed 24 performance test requirements

(proposed S11.3.1 through proposed S11.3.24), and is adopting twenty-two of those requirements in the final rule. NHTSA believes that these extensive requirements will ensure that alternative air brake tubing materials are subjected to rigorous testing to provide safe service in air brake systems.

HPP stated that if the requirements in SAE J844 are performed on air brake tubing made from materials other than nylon, additional tests might be appropriate, such as a high-temperature burst test. However, HPP did not provide any test parameters that the agency could evaluate. NHTSA notes in the section below that high-temperature conditioning requirements for plastic air brake tubing have been included for adoption in FMVSS No. 106.

With regard to the agency's statements in the NPRM that air brake tubing must be either Type A, single layer, unreinforced construction, or Type B, two layer, reinforced construction, the agency has reviewed the comments on this subject and has decided not to adopt these requirements in the final rule. Additional details that formed the agency's decision on this subject are included in the sections below.

2. Construction

NPRM—The NPRM solicited comments on whether air brake tubing should be designated as Type A—a non-reinforced, single-layer tubing (designated for small diameter tubing in SAE J844), or as Type B—constructed from two layers of material with a reinforcing braid at the interface of the two layers (designated for large diameter tubing in SAE J844).

Public Comments and NHTSA's Response—SMC cited the SAE J2547 as a standard currently in draft that will not restrict the tubing to have either a single wall or two walls with a reinforcement braid, but SMC did not provide any additional details on the SAE effort that the agency could consider regarding the final rule. SMC stated that Europe is currently using single wall tubing for all sizes used in the trucking industry. SGPPL proposed that if references to nylon are not included for air brake tubing, one solution would be to also eliminate references to reinforced, unreinforced, and single- or multi-layer tubing construction, but retain dimensional values including inside diameter, outside diameter and/or wall thickness.

HPP stated that single layer tubing with an outside diameter of 10, 12 and 16 millimeters, or ⅜, ½, ⅝ and ¾ inches, can meet SAE J844 requirements and should be permitted in FMVSS No. 106. HPP stated that from technical and safety standpoints, there is no need for reinforced tubing for the larger diameter applications.

As earlier noted, DuPont believed that there was no need to include references to specific types of construction in FMVSS No. 106, because any style of construction that passes the rigorous test procedures and dimensional requirements as described in the NPRM should be permissible.

The agency agrees with the comments from SMC, SGPPL, HPP, and DuPont that construction and reinforcement requirements do not need to be included in FMVSS No. 106. NHTSA believes that the safety of plastic air brake tubing will be ensured by the 22 tests specified in this final rule.

Parker/Atofina stated that the NHTSA proposal not to include the construction and material specifications for Type A and Type B tubing as specified in SAE J844 is inappropriate and potentially unsafe to users. It stated that by not including additional material property tests into FMVSS No. 106 to safeguard the performance of alternate tubing made from unproven and unspecified polymers creates a significant product design risk. It suggested including test requirements for battery acid resistance, high temperature burst, high temperature heat aging, and moisture absorption to help prevent the use of unsuitable materials. HPP made similar comments regarding the need for additional tests such as an elevated temperature burst test if nylon is not specified as the tubing material. HPP stated that air brake tubing can be exposed to temperatures in the 80 to 100 degree Celsius (176 to 212 degrees Fahrenheit) range.

NHTSA notes that the NPRM proposed to amend FMVSS No. 106 by including, for plastic air brake tubing, tests for moisture absorption, high temperature resistance, high temperature conditioning with low temperature impact resistance, boiling water conditioning with low temperature impact resistance, and high temperature conditioning and collapse resistance. All of these test requirements have been incorporated into the final rule. Parker/Atofina did not identify the parameters of the suggested battery resistance test, nor did they indicate why the test conditions proposed in NPRM involving, for example, high temperature conditioning of plastic air brake tubing, are insufficient for materials other than nylon. HPP indicated that temperatures up to 100 degrees Celsius (212 degrees Fahrenheit) can be experienced by plastic air brake tubing in use, and the agency has included high temperature conditioning tests for tubing in the 100 to 110 degrees Celsius (212 to 230 degrees Fahrenheit) temperature range.

NHTSA believes that the extensive series of test requirements that it is adopting in the final rule will be sufficient to ensure the safe performance of plastic air brake tubing made from materials other than nylon, and, as discussed in the section below on zinc chloride and methyl alcohol resistance, the agency may consider additional chemical resistance tests for plastic air brake tubing in the future. For example, DuPont cited the use of copolyester elastomer in air brake tubing. Therefore, in this final rule, the agency is not specifying that air brake tubing must be manufactured from nylon.

NHTSA believes that although materials other than nylon, possibly constructed as unreinforced, single-layer tubing, have been developed and used (for example, in Europe), it does not automatically mean that these other materials or constructions (such as alternate plastic/non-nylon tubing) can be applied to FMVVSS No. 106 without careful consideration. One of the main purposes of the agency's undertaking rulemaking on FMVSS No. 106 is to implement dimensional specifications for air brake tubing that currently do not exist in the standard, to preclude the sale or use of tubing that is not compatible with existing SAE J844 (or SAE J1394) tubing and end fittings used extensively in the United States. Alternate air brake tubing products that are developed will have to meet the extensive performance requirements for air brake tubing that are included in this final rule, and will also have to do so within the dimensional specifications that are also being adopted. NHTSA does not expect that inferior products of any type or size will meet these extensive requirements.

3. Labeling

NPRM—NHTSA proposed to require air brake tubing to be labeled with the manufacturer identifying information at intervals of not more than 6 inches, from the end of one legend to the beginning of the next. This represented no change from the FMVSS No. 106 labeling method already specified for brake tubing.

Public Comments and NHTSA's Response—Parker/Atofina commented that based on their experience, the vast majority of plastic air brake tubing assembly lengths are greater than 15 inches. The tubing would be sufficiently marked for product tracking if the text marking repeat interval is not more than 15 inches. NHTSA believes that to facilitate identification of the hose

manufacturer, all brake hoses must be labeled to identify the manufacturer. To increase the labeling interval to 15 inches may increase the likelihood that a particular brake hose may not include the labeling information. Therefore, NHTSA will not adopt the suggestion of a 15-inch repeat interval for brake hose labeling.

Parker/Atofina commented that the agency's proposal is too restrictive on manufacturers in order to maintain complete marking context and text liability on small diameter plastic tubing. Presumably, Parker/Atofina is referring to the requirement that the height of the labeling information be at least one-eighth of an inch. NHTSA notes the one-eighth inch height requirement has been in FMVSS No. 106 for many years. Further, Parker/Atofina did not suggest an appropriate lettering height for small diameters of air brake tubing. NHTSA is not changing the lettering height requirements in this final rule.

4. Dimensions and Tolerances

NPRM—NHTSA proposed to incorporate into FMVSS No. 106 the dimension and tolerance requirements contained in SAE J844, and also SAE J1394 covering metric sizes of tubing, as Table VII of FMVSS No. 106.

Public Comments and NHTSA's Response—Parker/Atofina provided several recommendations for changes to Table VII, stating that for example, the tolerance for wall thickness should be similar for metric tubing that is close in size to that of an inch-sized tubing. The recommended changes are for the dimensional specifications of 10, 12, and 16 millimeter brake tubing. Parker/Atofina stated that these revisions are currently in process by the SAE under project S4–J844–01–01. The agency has reviewed the recommended changes and notes in general that they serve to tighten the tolerances, compared to the values published in the NPRM. The agency is adopting Parker/Atofina's recommended changes.

Parker/Atofina also noted that in Table VII, the outside diameter of the 3/8-inch brake tubing is specified as 9.69 millimeters, but the value should be 9.63 millimeters (as it appears in SAE J844). The agency notes this correction and includes it in the final rule.

5. One Hundred Percent Leak Test

NPRM—NHTSA did not propose to incorporate the requirement in SAE J844 that requires tubing manufacturers to subject all air brake tubing to a 200-psi leak test. The agency stated its belief that this is a quality control test and not a measure appropriate to include in FMVSS No. 106.

Public Comments and NHTSA's Response—Parker/Atofina commented that it believes that unless this requirement is mandated in FMVSS No. 106, manufacturers will not continue to perform the current quality inspections and controls, since the procedures represent added cost and require additional resources. NHTSA does not agree with this view. Manufacturers are required to take whatever steps are necessary to ensure that all of their plastic air brake tubing meets the full burst strength requirements in the standard ranging from 800 to 1,400 psi. NHTSA sees no additional safety need is met by requiring a 200 psi leak test in addition to a full strength burst test.

6. Burst Test

NPRM—NHTSA noted that in the existing FMVSS No. 106 test procedures, water is specified as a test medium, but that SAE J844 does not specify a medium. NHTSA considered air to be the more appropriate test medium for plastic air brake tubing rather than water. NHTSA proposed changing the burst strength requirements in FMVSS No. 106 to the higher values in SAE J844, and specifying air as the test medium rather than water. NHTSA proposed that the pressure in the tubing be increased in a period of 5 seconds because using the range of 3 to 15 seconds in SAE J844 would specify testing at both 3 and 15 seconds and therefore would be too broad of a specification for use in FMVSS No. 106.

Public Comments and NHTSA's Response—HPP, SMC, Parker/Atofina and SGPPL all recommended water (HPP recommended water or oil) as the preferred test medium because of concerns for the safety for the person conducting the test and cost factors. After considering this concern, NHTSA has decided to specify water as a test medium in all burst tests in this final rule, except for one test where oil is specified due to very low test temperatures.

SGPPL believes that FMVSS No. 106 should include a provision to prevent any conditioning of the air brake tubing sample prior to testing. SGPPL stated that polyamide material is hygroscopic and over time, will absorb water that will decrease the burst strength of the tubing. SGPPL recommended that the samples of tubing for the burst test be conducted on tubing as it is extruded from the production line.

NHTSA does not agree that samples of tubing should be tested to burst strength requirement only at the point of production. Typically, the agency or test laboratories contracted to do testing for the agency will purchase samples of brake hose at a retail point of sale and those samples are required to meet the requirements in FMVSS No. 106. This is also reflective of the condition of brake hose when it is sold to and used by the public. The agency notes that this may require some diligence by the brake hose manufacturer to ensure that the manufacturer's distribution methods do not permit excessive degradation of brake hose products between manufacture and retail sale. NHTSA retains the existing FMVSS No. 106 requirement under S11 *Test conditions* (S13 in the NPRM) that brake hoses and brake hose assemblies must be at least 24 hours old, and unused.

In the NPRM, NHTSA proposed to apply the test pressure in the brake tubing in 5 seconds during a burst test, instead of within the range of 3 to 15 seconds as specified in SAE J844. NHTSA stated that if it were to adopt such a range, when NHTSA conducts the testing, the brake tubing would be required to meet the burst test at 3 seconds, at 15 seconds, and at any point in between 3 and 15 seconds. NHTSA stated that the specification ''would be too broad of a specification for use in FMVSS No. 106.'' (*See* May 15, 2003 NPRM at page 26,398.) SGPPL stated that it does not exactly understand the agency's reasoning, but finds a range of 10 to 12 seconds to yield reliable, consistent results. SMC stated that instead of a timing requirement, a fixed flow rate should be specified rather than a time constraint, so that variable flow rates would not have to be used. However, SMC did not provide any details on what a suitable flow rate might be. Parker/Atofina stated that thermoplastic tubing possesses strain rate dependent properties such that if a tubing burst pressure is achieved under 3 seconds, a higher burst strength without failure can be achieved. It further stated that there is no one standard burst test apparatus that manufacturers could use, and specifying an exact 5 second timing requirement would require most costly and higher precision test equipment.

NHTSA believes that based on the comments, it may be difficult to achieve the 5-second timing with the existing test equipment in use. The agency notes that in the case of the burst strength test for a hydraulic brake hose as specified in FMVSS No. 106 at S6.2, the pressure in the brake hose is increased at a constant rate of 15,000 psi per minute. The precedent here is that a constant pressure increase rate is specified. Due to the costs and difficulty of achieving

the 5-second timing, in this final rule, NHTSA is going from a time increment to a pressure rate specification, as follows.

The burst strength pressures proposed for plastic air brake tubing are specified in Table VIII, and the specified burst strength pressures range from a low of 800 psi for ¾3/4 -inch outside diameter tubing, to a high of 1,400 psi for 3/8-inch outside diameter tubing. To achieve an 800 psi pressure in 15 seconds, the application rate would be 3,200 psi per minute. To achieve a 1,400 psi pressure in 15 seconds, the application rate would be 5,600 psi per minute. NHTSA agrees with Parker/Atofina's comment that faster pressure application rates can affect the outcome of the test results. Therefore, in the final rule, the agency is adopting a test pressure application rate of 3,000 psi per minute (3,200 psi per minute rounded down to 3,000 psi). The test pressure application rate of 3,000 psi per minute is consistent with SMC's stated preference for a fixed flow rate, and should not result in manufacturers' having to purchase new test equipment, as 3,000 psi per minute is a relatively slow pressure increase rate.

7. Moisture Absorption

NPRM—NHTSA proposed incorporating the moisture absorption specification from SAE J844 into FMVSS No. 106. SAE J844 specifies a sample of air brake tubing is conditioned in a humidity chamber for 100 hours, and the required performance is that the sample cannot exceed a two percent weight gain of absorbed moisture.

Public Comments and NHTSA's Response—SGPPL stated that it believes the moisture absorption test is designed around polyamide (nylon) material and is design restrictive. SGPPL stated that the moisture absorption test is not performance-based and does not indicate failure. SGPPL also believed that the heat aging test, cold impact test, boiling water stabilization and burst tests would be satisfactory for evaluating the effects of moisture exposure on the properties of tubing. DuPont stated that although it has no objections to the moisture absorption test, it believed that it may be redundant to both the heat aged burst pressure test and the dimensional specifications test (boiling water conditioning and dimensional stability).

Based on the information it received, NHTSA does not agree that this proposed requirement is design restrictive in favor of nylon tubing. NHTSA agrees, however, that as SGPPL states, failure of the moisture absorption test (excessive weight gain) does not directly indicate that the tubing has failed (*e.g.*, ruptured). In its prior comments regarding burst strength testing, SGPPL indicated that moisture absorption can affect burst strength. While DuPont believes that the moisture absorption test is redundant to other proposed test requirements, NHTSA notes that these tests involve soaking the tubing in boiling water for 2 hours, whereas the moisture absorption test involves a humidity soak of 100 hours. The outcome of these soakings would be affected if there were a difference in the water or moisture absorption rate of different materials.

NHTSA notes that in FMVSS No. 106 for hydraulic brakes, there are three performance requirements for hydraulic brake hose related to water absorption. After the hose is immersed in hot water for 70 hours (as specified in this final rule), brake hoses must pass a burst strength test, a tensile strength test, and a whip resistance test (separate tests, not conducted on the same hose).

If a sample of plastic air brake tubing were to fail the proposed moisture absorption test, the agency would then be able to show how that failure relates to a lessening of motor vehicle safety. If the agency could demonstrate a corresponding reduction in one or more mechanical properties of the tubing, NHTSA would be better able to demonstrate a relationship to motor vehicle safety. Therefore, in this final rule, NHTSA adopts a burst pressure strength requirement, rather than a weight gain limit, as the required performance criteria for this test requirement. NHTSA is using the same burst pressure requirement as for other tests that involve conditioning of the tubing, which is 80 percent of the burst strength in Table VIII.

8. Ultraviolet Resistance

NPRM—NHTSA tentatively concluded that the plastic material used in nylon air brake tubing is significantly different from the materials used in rubber air brake hoses, and that plastic is susceptible to deterioration that can cause embrittlement due to exposure to ultraviolet light. NHTSA proposed to incorporate SAE J844's ultraviolet resistance test into FMVSS No. 106. SAE J844 includes an ultraviolet (UV) resistance test using an accelerated weathering device specified as the Q-Panel QUV test apparatus equipped with Phillips lamps, type UVS–340. NHTSA did not refer to any brand name of equipment in the proposed regulatory text of FMVSS No. 106. Presumably this test equipment, except for the special UV lamps, can be custom manufactured or purchased from a company such as Q-Panel.

The agency proposed to reference the apparatus specified in ASTM G154–00, *Standard Practice for Operating Fluorescent Light Apparatus for UV Exposure of Nonmetallic Materials,* rather than the one specified in ASTM G53 because ASTM G154–00 is an updated version of ASTM G53. NHTSA also proposed to reference two additional ASTM standards: ASTM D4329–99, *Standard Practice for Fluorescent UV Exposure of Plastics,* which is currently referenced in SAE J844, and ASTM G151–97, *Standard Practice for Exposing Nonmetallic Materials in Accelerated Test Devices that Use Laboratory Light Sources,* which is not currently referenced in SAE J844, but may provide useful guidance for conducting UV testing.

Public Comments and NHTSA's Response—SMC stated that the cost of purchasing a new system and performing the validation test on all sizes and configurations will need to be considered. SMC did not specify whether it has an older system that would need to be updated, or whether it has UV testing equipment. Parker/Atofina stated that the agency's proposal to require ASTM G–154–00 equipment will mandate that manufacturers will have to purchase a Q-Panel test apparatus with the Solar Eye irradiance measurement device. Parker/Atofina stated that this optional measurement device is not significantly relevant to the outcome or testing procedures required in the UV test for plastic tubing. Parker/Atofina stated that the alternate procedures in ASTM G53 and in SAE J844 are sufficient to display compliance with the current SAE J844 specification.

NHTSA disagrees that manufacturers will have to purchase new equipment that has the automatic irradiance control device. The requirement for the automatic irradiance control device is added to FMVSS No. 106 because the agency believes the device will provide the best available control of the UV irradiance level during the testing and reduce the likelihood of overexposure to UV light, compared to the alternate method of not using automatic irradiance control and rotating the lamps every 400 hours, discarding them after 1600 hours, and the other specified steps. NHTSA believes inclusion of automatic irradiance control will reduce variability in test results.

NHTSA believes that air brake tubing manufacturers will be able to use their existing UV test equipment if they are able to maintain the minimum specified irradiance level of 0.85 watts per square

meter. It is possible that equipment without irradiance measurement and control would result in higher irradiance levels and thus be more severe than the agency's required UV exposure requirement.

SMC commented that in the NPRM's section on *Rulemaking Analyses and Notices,* the capital cost to purchase a new ultraviolet test apparatus should be taken into consideration. SMC cited Executive Order 12866 for its position. In the NPRM, NHTSA discussed the cost issues resulting from the brake hose rulemaking and estimated the cost of upgrading brake hoses to meet with proposals in the NPRM to be in the range of zero dollars to $1.6 million annually. Further, the agency stated that it did not believe that the rulemaking would have a significant economic impact on a substantial number of small entities. Regarding SMC's comments on the cost of purchasing new test equipment, NHTSA believes that the cost of such equipment may be on the order of $5,000 to $10,000, a sum that would not have a significant effect on NHTSA's estimated cost of this rulemaking.

Parker/Atofina stated that it believes NHTSA's proposed inclusion of ASTM D4329–99 and G 151–97 offer education to the reader, but do not add significantly to the testing procedure or to the requirements specified in SAE J844. Parker/Atofina recommended that references to ASTM G 53, as referenced in SAE J844, are sufficient. As NHTSA noted in the NPRM, G 53 has been replaced by G 154. NHTSA believes that it should reference the most current of these two ASTM standards, since a goal of the agency's rulemaking is to update FMVSS No. 106 and remove obsolete references.

The NPRM referred to three ASTM standards: G 154–00, which provides information on the spectral output of the UVA–340 lamps; G 151–97, which provides practices to maintain control of irradiance within a test device; and D 4329–99, which provides guidance on preparation of test samples, positioning in the test device, and interpreting test results. NHTSA believes that because these three ASTM standards are interrelated, they should all be included in FMVSS No. 106. Therefore, in the final rule, the agency is keeping references to all three ASTM standards.

ASTM commented that the latest revision of ASTM standard G 151 *Standard Practice for Exposing Nonmetallic Materials in Accelerated Test Devices that Use Laboratory Light Sources* was G 151–00. NHTSA agrees that ASTM G 151–00 is the latest revision and probatively tests plastic tubing for ultraviolet resistance. In this final rule, NHTSA is incorporating ASTM G 151–00 in S12.7 *Ultraviolet light resistance test.*

9. Resistance to Zinc Chloride and Methyl Alcohol

NPRM—NHTSA proposed to incorporate the zinc chloride and methyl alcohol resistance requirements and test procedures from SAE J844 into FMVSS No. 106.

Public Comments and NHTSA's Response—DuPont stated that the agency's proposed test proposal was marginally adequate for FMVSS No. 106. It suggested considering adopting the requirements of ISO 7628 at S7.9.2, that includes resistance testing to zinc chloride, copper chloride, sodium chloride, and potassium chloride. In addition, testing discrete samples of brake tubing may be appropriate to evaluate all layers of the tubing, as may be found with cut ends of tubing or if an outer layer of the tubing is compromised. SGPPL also referenced the test in ISO 7628 and suggested that the agency may wish to review the test requirements. SGPPL stated that SAE is currently reviewing the ISO 7628 requirements and the ISO 7628 test may be needed, given the various chemicals used on roads today.

SGPPL requested a clarification that in the agency's proposed zinc chloride test, only the outside of the tubing is to be exposed during the test. SGPPL stated that the outside is the only part of the tubing that is exposed to zinc chloride while in operation on a motor vehicle. NHTSA agrees with this comment, and provides additional text in the final rule to clarify that the zinc chloride test is only conducted on the exterior of the tubing.

Regarding the incorporation of additional chemical resistance tests into FMVSS No. 106, the agency does not have sufficient information to include such incorporation in the final rule. NHTSA would also provide the public with an opportunity for comment before adopting additional chemical resistance tests.

HPP stated that the bend radius for the zinc chloride and methyl alcohol resistance tests (and also the high temperature flexibility tests) should be the test bend radius as specified in Table 2 of SAE J844, rather than two times the nominal outside diameter of the tubing as specified in the NPRM. This was also noted by Parker/Atofina. NHTSA has concluded that the commenters are correct and for the zinc chloride, methyl alcohol resistance, and high temperature flexibility tests, is referencing the bend radii from FMVSS No. 106's Table VIII in the final rule.

10. Stiffness

NPRM—Because FMVSS No. 106 does not contain a similar set of procedures/requirements, NHTSA proposed to incorporate the stiffness procedures/requirements from SAE J844 into FMVSS No. 106. The stiffness test requires that a section of tubing is conditioned in a straight position at 230 degrees Fahrenheit for 24 hours, and after cooling and by using a special test fixture, the force required to deflect the tubing 2 inches at its ends is measured. The resulting force may not exceed a specified amount that ranges between one pound and 80 pounds depending on the diameter of the tubing. In the NPRM, the agency stated its belief that this test would ensure that the flexibility of the tubing is not reduced when the tubing is subjected to elevated temperatures.

Public Comments and NHTSA Response—SGPPL commented that it sees reasons to both include and exclude this test requirement from FMVSS No. 106. It believes that the stiffness test is not a true performance criterion for the tubing, and that stiffness is not linked to any failure mode. Stiffness also does not gauge form, fit, or function of the product. Historically, thermoplastic air brake tubing has replaced traditional steel and copper tubing air lines, and although much less stiff, plastic tubing stiffness does not affect the end functionality of the tubing. SGPPL stated that this test could be considered design restrictive and written around the use of plasticized polyamide material. SGPPL stated that the stiffness test does serve a purpose from the perspective of a truck original equipment manufacturer (OEM) in that overly stiff tubing would be too difficult to route during truck assembly.

SGPPL noted that the stiffness test as proposed in the NPRM did not include a pull rate specification that can affect the results of the test. It stated that it consistently uses a pull rate of one inch per minute.

NHTSA has considered SPPL's comments and agrees that it would be difficult to identify how failures of the stiffness test would be detrimental to motor vehicle safety. The agency agrees that the stiffness test may serve a purpose for vehicle manufacturers that desire to specify a particular stiffness in their specifications for its airbrake tubing. NHTSA also believes that specific stiffness characteristics may be desirable for tubing used in applications such as when long runs of tubing are used on semitrailers versus tubing used

to plumb tractors. Therefore, NHTSA is not including the stiffness test in this final rule. In lieu of the stiffness test, NHTSA specifies a test for collapse resistance as a measure of brake tubing performance when subjected to elevated temperatures.

11. Heat Aging Adhesion

NPRM—NHTSA proposed to incorporate the heat aging adhesion test procedures from SAE J844. NHTSA also proposed that the minimum adhesion performance requirement for Type B tubing be changed from the SAE requirement of ''no separation'' to 25 pounds per linear inch. NHTSA described several problems in directly applying the SAE J844 requirements. Foremost is that during the adhesion test, in which air brake tubing made of two layers is separated at the layer interface by cutting it apart and then subject to being pulled apart at this juncture, SAE J844 states that no separation at the layer interface is permitted. NHTSA pointed out that this could not be adopted because the tubing will ultimately fail at some point during the test. NHTSA proposed a metric of 25 pounds minimum separation force per linear inch, based in part on a similar test that is contained in FMVSS No. 106 to measure the layer separation performance of elastomeric air brake hoses.

The agency proposed that rather than having a stand-alone adhesion test, the adhesion test would only be performed as specified in SAE J844 that includes a heat aging conditioning test. This would eliminate the need to run an adhesion test, and also a heat aging and adhesion test.

The agency also deviated from SAE J844 in that rather than preparing a test sample from a helical section of hose, with the cut line following one of the reinforcing braids in the tubing, NHTSA proposed that the sample be prepared from an inch-long sample of tubing cut through one side along its longitudinal centerline.

Public Comments and NHTSA's Response—SMC commented that the agency's proposal to include a process that generates numerical data is superior to what it used in SAE J844. SAE noted that the separation requirement for elastomeric air brake hose is 8 pounds per linear inch, and stated that the separation requirement in SAE J2547 (a draft document in committee) is 4.4 pounds per linear inch. SMC stated that the reason that air brake tubing layers would separate would be relative motion between the connections (end fittings). NHTSA notes that plastic air brake tubing is used in applications that involve relative motion between components (e.g., the connections between tractors and trailers), but in those applications the tubing is in coiled form that generally distributes torsional and bending stresses over a great length of tubing. SMC also stated that the method of performing adhesion testing in SAE J2547 is still being drafted, and it did not provide any details as to what it might include.

DuPont stated that it agrees with the agency's proposed adhesion strength of 25 pounds per linear inch. It also stated that it believed the adhesion test to be potentially redundant since the performance in both the low temperature impact and heat age burst pressure tests would presuppose adequate bond strength.

SGPPL wrote in favor of adopting the 25 pounds per linear inch bond strength. It noted the difference between the sample preparation in SAE J844 which requires the cutting of a strip of tubing into a 6 millimeter wide helical coil (and other requirements) versus the NPRM proposal to cut a one-inch length of tubing cut lengthwise and cutting two flaps of material using a sharp knife to permit the test sample to be clamped in a tensile testing machine. SGPPL noted that if what is now a Type B tubing consisting of two layers were made as a single layer tubing, the bond strength test might not be needed. In addition, it posed the questions that if tubing were to be manufactured from several layers of different material bonded together, how would the adhesion levels be evaluated, and would it only be required at the bond interface of reinforcing material? SGPPL stated that it would be even more difficult to test between unreinforced layers of plastic than between a reinforced inner and outer layer.

HPP stated that there is no technical reason for a higher requirement for plastic tubing compared to elastomeric hoses. HPP has developed a method to determine the adhesion between layers of tubing, and references a ballot version of SAE J2260. However, HPP did not describe their test method, nor did it provide any further information about SAE J2260 that the agency could evaluate.

Parker/Atofina stated that the performance strength of Type B tubing is historically predicated on maintaining an inseparable bond between polymer layers across the yarn reinforcement interstitial areas within the tubing. Permitted separation between these tube and cover layers at the bond interface will result in tubing which kinks easily under mechanical stress. It states that the agency's proposal of 25 pounds per linear inch is insufficient to ensure consistent plastic tubing and assembly performance. According to Parker/Atofina, the SAE J844-mandated inseparable bond test is intended to evaluate the integrity and manufactured quality of the Type B thermoplastic air brake tubing construction.

Regarding the agency's proposed test sample preparation method, Parker/Atofina stated that the preparation of an inch-long specimen is impractical and impossible with properly manufactured and inseparably bonded Type B tubing. It stated that the test sample must be cut through the entire tubing wall in a helical path nearly parallel to the reinforcement yarn lay pattern in order to gain access to the layer interface and allow physical and visual evaluation of the bond between the polyamide layers in the interstitial areas formed away from where the yarn lay patterns cross. The agency notes by examination of a typical ½ inch O.D. Type B air brake tube, the sample size defined in SAE J844 for this size tubing would be 0.25 inches by 7.85 inches. The agency does not know if this sample size would be large enough to mount in a tensile testing machine for evaluation. Under the agency's NPRM, the sample size would be approximately 1 inch by 1½ inches for ½ inch O.D. air brake tubing.

Parker/Atofina stated that the SAE J844 adhesion test does not require a force measurement because the criterion for passing is an intimate bond as if the two layers were one. The need to specify a load is replaced by the visual examination between the two layers of contrasting colors.

The agency has reviewed all of the comments regarding adhesion testing and decided not to include the heat aging and adhesion test requirement in the final rule. It appears that the actual strength of the bond between layers of plastic tubing falls somewhere between 4.4 pounds per linear inch and something larger than 25 pounds per linear inch. The agency's proposed test method seemed acceptable to some commenters, but there were wide ranging viewpoints on what the acceptable adhesion strength should be. The SAE J844 test method appears unenforceable to NHTSA because it does not have any objective pass/fail metrics, such as a pounds force per linear inch strength requirement. The ''no separation'' specification in SAE J844, confirmed by visual inspection and not by a force measurement, does not seem to be a useful metric to determine the strength of the bond between tubing layers. In addition, as noted by SGPPL, alternate methods for

producing air brake tubing may include significantly different construction methods (more than two layers, or constructed without reinforcing braid) that would not be able to be easily tested to the procedure in SAE J844. It appears to NHTSA that the SAE committee working on SAE J2547 may be able to develop an alternate adhesion test method that the agency may be able to consider using in future rulemaking.

12. Collapse Resistance

NPRM—NHTSA proposed to incorporate the collapse resistance test procedures/performance requirements from SAE J844 into FMVSS No. 106, with two changes. First, the length of the pins that are used to attach the tubing in a bent position to the test fixture were specified as 1-inch or 50 millimeters in length, rather than left unspecified as in SAE J844. Second, the bend radii from Table 2 of SAE J844 were proposed to be adopted rather than the bend radii from SAE J844 Table 3, in order to have just one table of bend radii in FMVSS No. 106. The differences in the radii tables are slight, for example, for a ½ inch O.D. tube, Table 2 specified 2.00 inches versus 2.50 inches in Table 3, although for some other sizes of tubing, the radii in the two tables are the same. This made the proposal in FMVSS No. 106 slightly more rigorous than SAE J844, because in the collapse resistance test the tubing is bent without being supported by a test cylinder, and the bend radii in Table 2 are for bends that use a test cylinder for support as the tubing is bent around the cylinder.

Public Comments and NHTSA's Response—SMC stated that it find the agency's proposal acceptable. Parker/Atofina stated that the tubing sample length formulas specified in FMVSS No. 106 at S12.17(b) are less severe than in SAE J844. The diameter measurements in SAE J844 to validate the collapse resistance of tubing have been replaced with nominal diameters, lessening the severity of the bend test. NHTSA has carefully compared the requirements in SAE J844 with the NPRM, and cannot verify Parker/Atofina's statements. The diameter collapse measurement procedures proposed in Standard No. 106 at S12.15(c) *Calculation* are in fact the same calculation as used in SAE J844 at S9.14.5, and do not refer to a nominal diameter specification. The tubing samples specified in FMVSS No. 106 at S12.15(b) are the same as those in SAE J844. However, in FMVSS No. 106, the length of the supporting pins is specified while in SAE J844, the length of the supporting pins is not specified. For both FMVSS No. 106 and SAE J844, the length of the supporting pins is considered in the length of the prepared tubing sample. NHTSA used different wording in the NPRM to amend FMVSS No. 106 than in SAE J844, partly to better describe the test procedure, and to avoid having to adopt Figures 3 and 4 from SAE J844 into FMVSS No. 106. NHTSA determined only that the collapse resistance proposed in FMVSS No. 106 is slightly more rigorous than in SAE J844 because of minor reductions in the bend radii used during the evaluation of collapse resistance for a few particular sizes of tubing.

Parker/Atofina also commented that the minimum kink radii from Table 3 of SAE J844 should be used for the collapse resistance test, and that Table VIII should be labeled ''minimum kink radius'' rather than ''bend radius'' as proposed in the NPRM.

For this final rule, after reviewing the proposed collapse resistance test and the comments provided, NHTSA has decided to amend the requirements from those proposed in the NPRM. Table VIII has been modified to include both sets of bend radii from SAE J844 (Table 2, Mechanical Properties, Test Bend Radius adopted into Table VIII of FMVSS No. 106 as ''Supported Bend Radius,'' and Table 3, Minimum Kink Radius adopted into Table VIII of FMVSS as ''Unsupported Bend Radius.''). The supported bend radius values for metric sizes of brake tubing in Table VIII are taken directly from Table 2 in SAE J1394, but there are no values provided for Minimum Kink Radius in SAE J1394 that can be used for unsupported bend radius values in Table VIII in FMVSS No. 106.

NHTSA used the following approach to determine the unsupported bend radius values for metric sizes of air brake tubing for Table VIII:

1. The nominal diameter of 6 mm tubing is 0.236 inches, and is closer to ¼ inch tubing (0.250 inches), so the 1.00 inch unsupported bend radius for ¼ inch tubing was adopted.
2. The nominal diameter of 8 mm O.D. tubing is 0.315 inches, and is close to 5/16 inch tubing (0.313 inches), so the 1.50 inch unsupported bend radius for 5/16 inch tubing was adopted.
3. The nominal diameter of 10 mm O.D. tubing is 0.393 inches, and is close to ⅜ inch tubing (0.375 inches), so the 1.50 inch unsupported bend radius for ⅜ inch tubing was adopted.
4. The nominal diameter of 12 mm O.D. tubing is 0.472 inches, and is close to ½ inch tubing (0.500 inches), so the 2.5 inch unsupported bend radius for ½ inch tubing was adopted.
5. The nominal diameter of 16 mm O.D. tubing is 0.629 inches, and is close to ⅝ inch tubing (0.625 inches), so the 3.00 inch unsupported bend radius for ⅝ inch tubing was adopted.

The agency adopts the term ''unsupported bend radius'' rather than Parker/Atofina's recommended ''minimum kink radius'' because during the collapse resistance test, the tubing is not permitted to kink. To use the term ''kink'' in FMVSS No. 106 may prove to be confusing.

The regulatory text of the test procedure in S12.15 has been modified in three respects from that proposed in the NPRM. First, the two supporting pins of the test fixture are not required to be adjustable, since pins only need to be set at a specified spacing as shown in Figure 5—Bend Test Fixture of SAE J844. The pin spacing requirement is now defined as twice the unsupported bend radius plus the nominal O.D. of the tubing, consistent with what is depicted in Figure 5 of SAE J844. In the NPRM, the pins were to be adjusted until the approximate bend radius was achieved on the brake tubing. The language in the final rule is simpler and has less opportunity for introducing variability. Second, a provision is added that the tubing should be bent in the direction of its natural curvature, consistent with SAE J844. Third, the term ''elliptical minor diameter'' is used rather than ''minor diameter'' to better indicate in geometric terminology where the initial and final diameter measurements of the tubing are to be taken.

13. Oil resistance

NPRM—NHTSA tentatively concluded that in the case of plastic air brake tubing, it would be more appropriate to evaluate a mechanical property of the tubing such as the ability to pass a burst test after conditioning in oil. NHTSA also concluded it is critical that plastic air brake tubing be resistant to oil exposure. Therefore, NHTSA proposed a test procedure for plastic tubing that combines existing FMVSS No. 106 oil conditioning criteria with the burst strength requirements of SAE J844. The proposed test procedure involved preparation of a tubing assembly, conditioning it in ASTM IRM 903 oil (which supercedes ASTM No. 3 oil as described in ASTM D471–98e1, *Standard Test Method for Rubber Property-Effect of Liquids)*, and then subjecting the tubing to the burst test specified in SAE J844. NHTSA proposed that the tubing not burst at less than 80 percent of the burst pressure listed in Table 2 of SAE J844.

Public Comments and NHTSA's Response—HPP stated that the proposed oil resistance test should apply to

elatostomeric brake hoses in addition to air brake tubing. SMC stated that the burst pressure of SAE J844 is more suited to testing tubing, and that the oil needs to be changed to stay consistent with the ASTM changes. SGPPL agreed that it is critical that plastic air brake tubing is resistant to oil, but stated that it has not performed any such testing as proposed in the NPRM. SGPPL asked if both the inner diameter and the outer diameter of the tubing were to be submerged in oil, and questioned whether the oil resistance requirements would be more suitable to brake hose assemblies as described in Section E, *Plastic Air Brake Tubing Assemblies and End Fittings,* of the NPRM. It stated that as proposed in the NPRM, it is a tubing material test, rather than a test for the mechanical properties of end fittings.

DuPont agreed with the addition of an oil resistance test to FMVSS No. 106. Parker/Atofina asked that its previous comments relating to the burst test (water used as the test medium and timing of pressure rise be measured) be considered for the oil resistance test as well.

After reviewing the comments, NHTSA also reviewed the proposed requirements for the end fitting retention test in S11.3.23, which was adopted from SAE J1131. This test evaluates the retention of end fittings that are used with plastic air brake tubing. A sample air brake tubing assembly is prepared, filled with hydraulic fluid and then pressurized to 50 percent of the burst strength pressure. This pressure is held for 30 seconds, and then the pressure is increased to 100 percent of the burst strength pressure. No leakage or separation is permitted.

The agency also reviewed the proposed thermal conditioning and end fitting retention test in S11.3.24 that was proposed to be adopted from SAE J1131. In this test, an air brake tubing assembly is prepared with end fittings, filled with hydraulic oil, and connected to a source of hydraulic pressure. The assembly is then conditioned in air at 200 degrees Fahrenheit for 25 hours with atmospheric pressure inside the tubing. The pressure is then increased to 450 psi while still at the elevated temperature, and held for five minutes. The pressure is reduced to atmospheric and the temperature reduced to 75 degrees Fahrenheit for one hour, and then the temperature is decreased to minus 40 degrees Fahrenheit for 24 hours. While at that temperature, the pressure is increased to 450 psi and held for five minutes, and the required performance is that no leakage or separation from the end fittings is permitted.

Parker/Atofina's only recommendation for the thermal conditioning and end fitting retention test was to increase the pressure within 5 to 30 seconds during the pressure cycles to not hydraulically shock the system.

NHTSA evaluated all of the comments, reviewed the proposed test requirements, and reached the following conclusions. NHTSA has determined that the oil resistance test is intended to evaluate the properties of the tubing (S11.3.18 specifies that the air brake tubing shall not rupture or burst) although it may also evaluate the oil resistance properties of the end fittings, since end fittings must be installed to attach the tubing to the pressure test machine. Whether those end fittings are the same as the end fittings used on a vehicle, or are fittings designed to adapt the tubing to the pressure test device, is a decision to be made by the test sponsor. Both oil and water are non-compressible and will provide the same measure of performance. Therefore, the oil resistance test will be made final in this rule, but the pressure test medium (after the conditioning by soaking in oil) can be either water as suggested by Parker/Atofina for the final burst test, or oil at the manufacturer's option if cross-contamination of the water pressure source for the burst testing specified in S12.5 is a concern of the manufacturer.

The thermal conditioning and end fitting retention test is kept in the final rule for the purpose of evaluating end fitting retention when subject to thermal and pressure cycling. Water cannot be used in the thermal conditioning and end fitting retention test because of the low temperatures (minus 40 degrees Fahrenheit (minus 40 degrees Celsius)) involved. NHTSA noted in the NPRM that the hydraulic fluid in SAE J1131 did not have any particular specifications. NHTSA believes that if it changed the specification in the thermal conditioning and end fitting retention test to the ASTM IRM 903 oil, the test would be more suited towards ensuring that the end fitting retention test also provides a measure of oil resistance as well. The conditioning at 200 degrees Fahrenheit for 70 hours is similar to the requirements proposed for the oil resistance test except that a slightly higher oil soak temperature of 212 degrees Fahrenheit was proposed for the oil resistance test.

NHTSA adopts a constant pressure application and reduction rate of 3,000 psi per minute for all burst tests and pressure increases or decreases, to eliminate variability in the time of the pressure application. NHTSA believes it has thus addressed Parker/Atofina's suggestion of a longer time limit for the pressure increases in the thermal conditioning and end fitting retention test.

NHTSA believes that with these changes, the plastic air brake tubing material and the end fittings of tubing assemblies will be able to be evaluated for oil resistance. NHTSA believes that both the outside and inside sections of brake hose tubing should be oil resistant, and includes this requirement in the oil resistance test. The thermal conditioning and end fitting test will only evaluate the oil resistance of those portions of the end fittings that are exposed to internal pressure in the tubing.

Finally, NHTSA notes that it may revisit the issue of the oil resistance test in a future rulemaking if this should become necessary.

NHTSA proposed that ASTM IRM 903 be the test medium for gauging air brake tubing and assemblies for oil resistance properties. NHTSA has reviewed the oil compatibility test in S3.7 of SAE J2494–3 *Performance Requirements for SAE J844 Non-Metallic Air Brake Tubing and Push-to-Connect Tube Fittings, with SAE J844 Air Brake Tubing as Used in Vehicular Air Brake Systems,* (described in more detail below), and notes that it is conducted using a mixture of 11 parts SAE 15W40CD type oil and one part SOFTC–2A contaminant. No commenter made note of this different reference oil specification. NHTSA is therefore keeping the ASTM oil specification in this final rule.

Regarding the end fitting retention test that was proposed as S12.24 in the NPRM (designated as S12.22 in this final rule), NHTSA is adopting Parker/Atofina's suggestion that water be used as the test medium rather than oil. Parker/Atofina stated that water is a cleaner test medium than hydraulic oil, and the agency believes that there are no special temperature requirements that preclude the use of water in this test. The pressure increase rate is being specified as 3,000 psi per minute as it is for all other test requirements relating to pressure tests for air brake tubing.

NHTSA is not adopting HPP's suggestion to subject elastomeric air brake hoses to the oil resistance test in this final rule. NHTSA notes that these types of brake hoses are subjected to a different type of oil resistance performance test that appears to be effective in ensuring adequate safety of these brake hoses.

14. Ozone resistance

NPRM—NHTSA proposed an ozone test for plastic air brake tubing in which a sample of tubing is bent around a test cylinder and exposed to ozone at a concentration of 100 parts ozone per hundred million parts of air, for 70 hours at a temperature of 104 degrees Fahrenheit. The required performance is that no cracks are visible when the tubing is viewed under 7x magnification.

Public Comments and NHTSA's Response—Parker/Atofina stated that thermoplastic air brake tubing does not require ozone testing because polyamide nylon is not affected by ozone. HPP stated that it supports the ozone test for plastic tubing, but it recommended that for tubing used with barbed end fittings, a test of the tubing with the end fittings attached should be conducted with a longer exposure time of 500 hours. DuPont acknowledged the importance of having an ozone resistance test in FMVSS No. 106. Several commenters noted that the agency had incorrectly stated the proposed ozone concentration in parts per million rather than parts per hundred million (pphm). The correct ozone concentration level of 100 pphm is included in this final rule.

NHTSA notes that for all types of brake hoses in FMVSS No. 106, the ozone concentration is being increased from 50 to 100 pphm in accordance with the latest SAE standards. As such, this represents an increase in the severity of the test condition. NHTSA does not believe that it would be appropriate to increase the exposure time from 70 to 500 hours at this time, as recommended by HPP. NHTSA believes that there is little or no use of barbed hose fittings on air braked vehicles in the United States, as the most common styles are push-to-connect and flanged sleeve compression fittings.

F. Plastic Air Brake Tubing Assemblies and End Fittings

1. General Comments

In the NPRM, NHTSA proposed to incorporate the substantive requirements of SAE J1131 *Performance Requirements for SAE J844 Nonmetallic Tubing and Fitting Assemblies Used in Automotive Air Brake Systems* into FMVSS No. 106. NHTSA noted that the petitioners did not ask NHTSA to adopt the requirements of this SAE standard into FMVSS No. 106. The petitioners had instead asked that NHTSA adopt the requirements of SAE J512 *Automotive Tube Fittings and SAE J246 Spherical and Flanged Sleeve (Compression) Tube Fittings.* These two latter standards include specific dimensional requirements for the end fittings and components of fittings. The agency tentatively determined that rather than specifying the dimensions of the fittings, it would be more appropriate to specify the performance of the fittings per SAE J1131, to assure that the end fittings used along with air brake tubing work properly as an assembly.

Parker/Atofina stated that it believes that end fitting dimensional, material, performance and safety requirements referenced in SAE J246 and SAE J512 specifications should be retained, so that the components of end fittings from different manufacturers would continue to be compatible. As stated in the NPRM, the agency does not desire to include these dimensional specifications (which are in effect design specifications), but proposed instead to adopt the performance requirements for these fittings when used with plastic air brake tubing.

SMC, SGPPL, and Parker/Atofina made reference to three SAE Standards: J2494–1 *Push-to-Connect Tube Fittings for Use in the Piping of Vehicular Air Brake,* Rev. May 2000; J2494–2 *Dimensional Specifications for Non-Metallic Body Push-to-Connect Fittings Used on a Vehicular Air Brake System,* Rev. October 2002; and J2494–3 *Performance Requirements for SAE J844 Non-Metallic Air Brake Tubing and Push-to-Connect Fitting Assemblies Used in Vehicular Air Brake Systems,* Rev. July 2002. SMC stated that incorporation of SAE J2494–3 would benefit the evaluation of the FMVSS No. 106 revision. SGPPL stated that since push-to-connect fittings are widely used in both preformed air brake tubing assemblies and in routing bulk air brake tubing lines in trucks, NHTSA should consider the use of both push-to-connect and compression fittings. Parker/Atofina recommended that FMVSS No. 106 include the sample size requirements of SAE J2494–3 and the performance requirements of SAE J1131. Regarding Parker/Atofina's issue with sample sizes for testing, the agency has already described that sampling as an issue for manufacturers to use for quality control methods, but that every brake hose that is DOT certified must meet the requirements of FMVSS No. 106.

The agency was not aware of the SAE J2494 series of standards for push-to-connect fittings when it published its NPRM. After reviewing these standards, NHTSA believes that adding the substantive end fitting performance requirements of SAE J2494–3 to FMVSS No. 106 would help ensure safety. However, NHTSA notes that incorporating SAE J2494–3 requirements into FMVSS would encompass an extensive series of test procedures including a tensile test (with high temperature, boiling water, and water absorption conditioning); thermal and pressure cycling and air leakage; vibration test; fitting pressure test; frozen water retention test; reassembly test; oil compatibility test; corrosion resistance test; side load leakage; moisture absorption; ultraviolet light resistance; zinc chloride and methyl alcohol resistance; and cold temperature impact. NHTSA would not issue a final rule amending FMVSS No. 106 by incorporating these tests without first putting forth a notice soliciting public comments on its proposal to include the tests. Some of the performance requirements included in the NPRM and this final rule provide similar coverage of the SAE J2494 requirements. Therefore, NHTSA will first complete its May 15, 2003 proposed rulemaking by issuing this final rule. At future date, NHTSA may consider proposing to add the outstanding requirements from SAE J2494.

2. Tensile Strength

NPRM—NHTSA proposed adopting similar tensile strength requirements for plastic air brake tubing as FMVSS No. 106 currently specifies for elastomeric air brake hose. The NPRM included slight reductions in tensile strength for the smallest sizes of plastic air brake tubing, proposing 35 pounds for ⅛ inch and 40 pounds for 5/32 inch tubing, in applications that are not between the frame and axle of a vehicle or between a towing and towed vehicle. The lowest specification for elastomeric brake hoses in the same application is 50 pounds if it is ¼ inch or less nominal inside diameter.

NHTSA developed its proposed requirements for small diameters of plastic air brake tubing based in part on a comparison of brake hose and tubing. Air brake tubing is sized by outside diameter rather than inside diameter (as brake hose is sized), and therefore, the sizes are not directly comparable. A ¼ inch outside diameter brake tube would be smaller than a ¼ inch inside diameter brake hose, and therefore would not be expected to have the same tensile strength.

NHTSA noted that in the text on page 26403 of the NPRM that it correctly stated its intentions of a 35-pound strength for ⅛ inch tubing and 40 pounds for 3/32 inch tubing. However, Table VIII on page 26417 included incorrect values of 15 pounds for ⅛ inch tubing (which should have been 35

pounds) and of 40 pounds for 3/16 inch tubing (it should have been 50 pounds). These are corrected in the final rule. The values in Table VIII for 3/32 inch tubing were correct in the NPRM.

Public Comments and NHTSA's Response—SGPPL stated in its comments that it agrees with NHTSA's proposed reduction in tensile strength for 1/8 inch and 5/32 inch tubing. SGPPL stated that the 50-pound value used by SAE for 1/8 inch tubing and 5/32 inch tubing are not achievable using current products in the market place, as the tubing yields and breaks before a 50-pound value is attained in testing. SGPPL stated that the proposed values of 35 pounds and 40 pounds respectively are achievable using current tubing constructions.

SMC stated that the values in SAE J1131 (15 pounds for 1/8 inch, 40 pounds for 5/32 inch) reflect the tensile strength of current tubing material, and that higher values in SAE J2494 (50 pounds for 3/32 through 1/4 inch) is intended to meet the requirements are currently stated in FMVSS No. 106 and may be higher than the application requires and also may be design restrictive. SMC stated that the agency's proposal for reduced tensile strength requirements reflects the current capability of nylon tubing. However, NHTSA notes that SMC shows in its table of tensile strength the incorrect values that were included in the NPRM (15 pounds for 1/8 inch and 40 pounds for 3/16 inch). SMC also noted another error in Table VIII of the NPRM, where the correct tensile strength values for 3/8 inch tubing should be 667 N or 150 pounds. The correct values are stated in the final rule.

Parker/Atofina stated that the present plastic tubing sizes and constructions specified in SAE J844 can meet the tensile strength requirements in FMVSS No. 106 and it did not see a basis for lowering these requirements. Parker/Atofina also asserted that the agency provided no engineering basis for its decision. NHTSA notes that it described in detail the reasons for lowering the tensile strength requirements for small diameters of tubing, including the fact that small diameters of air brake tubing are smaller than equivalent sizes of elastomeric air brake hose. Parker/Atofina did not describe how it views the requirements in SAE J1131, where the tensile strength requirements are specified for tubing assemblies that are lower than the values that NHTSA proposed in the preamble of the NPRM.

Based on the available information and comments received, NHTSA believes that the proposed tensile strength values for small diameters of plastic air brake tubing are attainable by current plastic air brake tubing and therefore will incorporate these tensile strength values in this final rule.

Several commenters indicated that the proposed regulatory text for the plastic air brake tubing in S12.20 incorrectly referred to the procedure in S6.9 *Dynamic Ozone Test* instead of S6.4 *Tensile Strength Test.* The correct procedure is referred to in this final rule, except that the tensile strength test procedure for air brake hoses in S8.9 is referenced (S6.4 is for testing hydraulic brake hose) since it only includes a slow-pull test. SMC commented that the fixtures for holding the test specimen should be arranged so that the tubing and fittings have a straight centerline corresponding to the direction of the machine pull, and that the fitting should be mounted in the test machine using the same method as is used to mount the fitting on a vehicle. SMC suggested that non-threaded fittings would need further evaluation. NHTSA is adding a provision to S8.9 to include that a tubing assembly (or air brake hose) is to be arranged in a straight line when installed on the tension testing machine.

Parker/Atofina stated that it would be difficult to conduct the tensile test on coiled air brake tubing with the fixtures and procedures specified in SAE J1131 and proposed for FMVSS No. 106. Parker/Atofina requested that coiled air brake tubing be exempted from tensile testing requirements. As NHTSA stated in the NPRM, coiled air lines are commonly used for the connections between tractors and trailers, and normally function so that tensile loads on them are spread out over the long length of the coiled tubing. However, these coiled lines can get tangled among themselves, among various components (springs and poles) that are used to support the lines above the truck frame, or with the electrical cable. Further, NHTSA noted that these air lines are completely exposed to the elements, are frequently connected and disconnected, and may be subjected to various amounts of stretching depending on the physical dimensions of the trailers that are towed. The agency does not believe therefore that these air brake tubing assemblies should be exempted from tensile strength requirements. The tensile tests evaluate the connection of the plastic air brake tubing to the end fitting, and these portions of a coiled assembly can be evaluated by cutting off each end to a short length and testing each of these samples to the tensile strength requirements. Also, FMVSS No. 106 allows test samples to be made for such evaluations, by using the actual end fittings from the coiled assembly coupled to a straight section of air brake tubing if a coiled section of tubing cannot be easily straightened to fit on the test machine. The end fittings are to be attached according to the end fitting manufacturer's instructions. NHTSA assumes that both coiled and straight air brake tubing have the same dimensional specifications and would perform similarly at the point of connection to the end fittings.

3. Hot tensile strength

NPRM—NHTSA proposed that the hot tensile strength requirement from SAE J1131 be incorporated into FMVSS No. 106. Considering that SAE J1131 does not include tensile loads for metric sized plastic brake tubing, however, the agency proposed to specify tensile load values for metric sized plastic brake tubing.

Public Comments and NHTSA's Response—Many of the comments regarding unconditioned tensile strength discussed in the above section ''Tensile Strength,'' also apply to this test requirement. The agency is adopting the corrected, proposed tensile strength requirements in Table VIII of FMVSS No. 106 in this final rule.

SMC commented that a straight pull should be indicated as in the section on ''Tensile Strength.'' NHTSA agrees. In this final rule, NHTSA adds the provision on straight pull to the regulatory text.

SGPPL stated that the test conditions in SAE J1131, upon which the agency based its proposal, may be inadequately defined. SGPPL stated that variations in hot tensile test results may be introduced by the vessel size and rate of boiling water evaporation, and the agency should consider more stringently-specified variables such as air flow over the exposed length of tubing. Further, it would want to review any proposed values for metric-sized plastic tubing before they are incorporated into FMVSS No. 106. The agency agrees that there could be very slight variations since the heat application rate, type of vessel, and other variables are not specified, but in general NHTSA believes the variables would not affect the test results since water will boil at 212 degrees Fahrenheit (100 degrees Celsius) at standard atmospheric pressure, and cannot get hotter. NHTSA believes that as a minimum performance test, the vessel must be large enough so that at all times, four inches of tubing is submerged, as the water is brought to a boil and during the five minutes of conditioning at the boiling point. As to the rate of heating the water, the agency believes that the amount of heat and the

method of applying the heat must be considered so that the water is brought to a boil without excessively heating the end fitting of the brake tubing assembly placed in the vessel. Therefore, in the final rule, when NHTSA performs the test, it will bring the water to a boil without the brake hose in place. The hose is placed after the water comes to a boil.

NHTSA reviewed the changes between the March 1997 and August 1998 revisions of SAE J1131 and notes that in the March 1997 revision, the water is brought to a boil and then allowed to continue boiling for five minutes. In the August 1998 revision, it is stated that the tubing is placed in the boiling water for 5 minutes. In the final rule, NHTSA is changing the regulatory text so that the water is first brought to a boil and then the tubing assembly is placed in it. Placing the tubing assembly after the water is brought to a boil will minimize the heating of the end fitting during the time the water is brought up to boil, but will require a rapid method of connecting the brake tubing assembly to the tensile testing machine while the water is boiling. Presumably, this would not be too difficult. The heat input required, mass of the vessel, and other variables must be at a minimum sufficient to keep the water boiling as the tubing assembly is placed in the water, and as it is conditioned for five minutes in the water.

Parker/Atofina stated that the hot tensile strength requirements for metric plastic air brake tubing must be consistent with those proposed by SAE in revisions of SAE J1394. However, Parker/Atofina does not indicate what those values are, as the agency finds that the tensile strength requirements are in SAE J1131 and not SAE J1394 or SAE J844. SAE J1131 does not include metric sizes of air brake tubing and therefore there is no specified tensile strength for these sizes. In a previous comment, Parker/Atofina stated, concerning tensile strength requirements, that the present plastic tubing sizes specified in SAE J844 and SAE J1394 can meet the tensile strength requirements specified in FMVSS No. 106. In the absence of any information to the contrary, in this final rule, NHTSA is keeping the proposed tensile strength values in FMVSS No. 106 Table VIII.

Parker/Atofina stated that the correct column heading for the tensile strength values should be ''conditioned tensile load'' to prevent confusion with the tensile strength requirements in S11.3.19. NHTSA agrees, and has made this change in the final rule.

NHTSA's proposed description of measuring free length at the end fittings for air brake tubing assemblies (in several tests for air brake tubing) was: ''The free length is measured from the innermost crimp, ferrule, taper, or other mechanical joint that secures the fitting to the tubing and spring guards and other appurtenances are disregarded for measurement purposes.''

Parker/Atofina recommended that ''free length'' be defined simply as the exposed tubing between two end fittings. NHTSA has considered this change and agrees that the simpler definition would suffice. This final rule includes the simplified definition in the regulatory text of FMVSS No. 106 for all free length measurements of plastic air brake tubing assemblies.

4. Vibration Leak Test

NPRM—NHTSA stated its belief that the SAE J1131 performance requirements/test procedures ensure adequate end fitting performance to resist vibration and temperature cycling. NHTSA proposed to adopt the requirements from SAE J1131 in which an 18-inch long brake hose assembly is subjected to 1,000,000 vibration cycles while being thermally cycled between 220 degrees Fahrenheit and minus 40 degrees Fahrenheit. The low temperature leakage rate just prior to completion of the test is not to exceed 50 cubic centimeters per minute, and at room temperature, the leakage is not to exceed 25 cubic centimeters per minute.

Public Comments and NHTSA's Response—SGPPL commented that similar testing is in SAE J2494 covering push-to-connect fittings and may warrant review. SMC commented that the leakage rate in SAE J2494–3 is 7 cubic centimeters per minute at minus 40 degrees Celsius and 5 cubic centimeters per minute at 24 degrees Celsius, and that the vehicle manufacturers requested a lower leakage rate to reduce overall system leakage.

NHTSA agrees that while a lower leakage rate would be better for air leak reduction on vehicles, it was not aware of the SAE activity on J2494. Before adopting lower leakage values, the agency would first need to publish them for public comment. Therefore, in this final rule, NHTSA is adopting the values as proposed in the NPRM. In the future, NHTSA may propose adopting the lower leakage rates, and solicit public comment on the lower rates.

5. Proof and Burst Test (End Fitting Retention)

NPRM—NHTSA proposed to incorporate the proof and burst test from SAE J1131 into FMVSS No. 106 so that there will be a specific test to evaluate the performance of end fittings used with plastic tubing. NHTSA proposed that this test be conducted using water, as this is the test fluid used for the burst strength test for air hoses in FMVSS No. 106. The tubing assembly is pressurized to one-half of burst strength pressure and held at that pressure at 30 seconds, and then the pressure is increased to burst pressure. The end fitting is not permitted to leak or separate from the tubing.

Public Comments and NHTSA's Response—SGPPL and Parker/Atofina noted some discrepancies between the preambular language in the NPRM and the proposed regulatory text. These problems have been corrected in the final rule, as they have for other burst tests in FMVSS No. 106. Water is specified as the test medium, and the regulatory text is changed to a constant 3,000 psi per minute pressure increase rate at each stage of pressure increase in the test.

Parker/Atofina notes that a visual inspection for leakage is only to be conducted at the one-half burst pressure point as it would not be safe to visually inspect the tubing assembly at the full burst pressure. Parker/Atofina states that visual inspection of the assembly at full burst pressure should not be conducted. In the final rule, NHTSA is removing references to visual inspection for the proof and burst test and also the thermal conditioning and end fitting retention test. The required performance specification continues to remain that the assembly shall not rupture.

SMC stated that common practice is for the proof pressure to be 50 percent of the burst pressure or 375 psi for end fittings, and the agency notes that this is covered in the first pressure hold of the proposed proof and burst test. SMC stated that the failure mode of end fitting tests is typically in the tubing. An additional test of the fitting can be conducted by plugging the tube end and then pressurizing the threaded connection to failure or 1,500 psi. However, NHTSA is most concerned about the performance of end fittings when they are connected to the brake tubing. NHTSA may consider stand-alone pressure tests of end fittings in a future rulemaking.

6. Serviceability Test

NPRM—NHTSA proposed that the serviceability test be included in Standard No. 106 for those fittings that use a threaded retaining nut. NHTSA proposed to adopt the serviceability test from SAE J1131 in which the fitting is assembled and dissembled four times. After a fifth reassembly, the fitting is subjected to a 120 psi pressure test. The permitted leakage is not to exceed 25

cubic centimeters per minute when measured with a mass flow meter.

NHTSA stated its belief that the serviceability test will ensure that the fittings can be separated and reused during servicing of brake system components with minimal likelihood of leakage upon reassembly. NHTSA stated it did not believe the serviceability test could be consistently applied to push-to-connect fittings and therefore did not propose to include them in the serviceability test.

Public Comments and NHTSA's Response—SGPPL referenced SAE J2494–3 requirements for a similar reassembly test for push-to-connect fittings contained in S3.6 of that standard. Under those requirements, a push-to-connect fitting is connected to a section of air brake tubing, and then pressurized to 120 psi and held at that pressure for five minutes. The assembly is depressurized and disconnected, and the sequence repeated. After the sixth assembly and pressurization, the leakage is measured with a mass flow meter and is not permitted to exceed 5 cubic centimeters per minute. No trimming of the tubing end is permitted during the test sequence.

Parker/Atofina correctly stated that in the NPRM, the test method was identified as 12.26, but that the corresponding test requirements were not included in S11. The agency notes that although not included in S11, the preamble on page 26,404 presented and discussed the proposed test requirements that would be adopted from SAE J1131.

In this final rule, the agency is adopting its original proposal to include this test for threaded fittings only. As stated in the NPRM, the serviceability test is used to evaluate end fitting performance for reusable fittings after repeated assembly and disassembly. No specifications for push-to-connect fittings will be specified in the serviceability test. The agency believes that push-to-connect fittings should be included, but the test procedure for them in SAE J2494 is different from the agency's proposal because the tubing assembly is pressurized and then depressurized during each reassembly cycle. Further, the leakage rates in SAE J2494 are significantly lower than those proposed to be adopted from SAE J1131, and NHTSA believes that an opportunity for public comment would be needed before adopting the more stringent requirement. NHTSA may revisit these issues in a future rulemaking.

No comments were received on the proposed pressure increase time in S12.26(c) in which the tubing assembly is pressured to 120 psi in a period of two seconds. In the final rule, the agency is specifying the pressure increase as 3,000 psi per minute in order to be consistent with other performance requirements involving pressure increases for air brake tubing. This would yield an elapsed time of 2.4 seconds from zero to 120 psi and this is consistent with the 2-second time interval that was proposed in the NPRM.

7. End Fitting Dimensional Requirements

NPRM—NHTSA provided an extensive discussion of why it did not propose to incorporate the dimensional requirements for end fittings as specified in SAE J246 and SAE J512 into FMVSS No. 106. For example, SAE J246 and SAE J512 do not include any metric-sized tubing end fittings that the agency could adopt into FMVSS No. 106. Other types of brake hoses, including hydraulic, vacuum, and air, do not have end fitting dimensional requirements in FMVSS No. 106 and these brake hoses have not shown any field problems due to the end fitting dimensional specifications. There is also an SAE J246 provision stating that it is not intended to restrict or preclude other designs of a tube fitting for use with SAE J844 brake tubing. NHTSA tentatively concluded that the performance tests for end fittings as specified in SAE J1131 were appropriate to adopt into FMVSS No. 106, as various end fittings can be used in meeting these requirements.

Public Comments and NHTSA's Response—Parker/Atofina, whose predecessor companies were parties to the petition for rulemaking to include these requirements in FMVSS No. 106, stated that the agency's proposal not to retain end fitting specifications from SAE J246 and SAE J512 creates significant safety issues related to form, fit, function and component assembly compatibility. Parker/Atofina stated that without the dimensional and geometric requirements defined in those SAE standards, end fitting components from one manufacturer will not connect, fit and function properly when mated together.

NHTSA believes that end fitting manufacturers will continue to use the SAE standards for end fittings, but is not convinced of the need to incorporate them into FMVSS No. 106. NHTSA believes that the minimum need to ensure the safety of air brake tubing and assemblies is met through adopting the proposed performance specifications and dimensional requirements for the tubing so that replacement tubing will be compatible with the end fittings. This is what has been done for many years for air brake hose. NHTSA is not aware of noted safety problems resulting from this practice.

8. End Fitting Corrosion Resistance

NPRM—NHTSA tentatively concluded that the existing corrosion resistance requirements in FMVSS No. 106 assure adequate integrity of end fittings, and in one respect is more strenuous than the SAE standards. NHTSA proposed to use the existing end-fitting corrosion resistance tests in FMVSS No. 106 that includes a 24-hour exposure to salt spray in the new section for plastic air brake tubing assemblies. NHTSA noted that SAE J246 and SAE J512 specify a longer, 72-hour exposure to salt spray for end fittings made from carbon steel, but the corrosion resistance test is performed on an end-fitting without attaching it to a brake hose. NHTSA proposed to keep the existing 24-hour exposure and test end fittings as they are attached to the brake hose, that is representative of how brake hose assemblies are installed on motor vehicles.

Public Comments and NHTSA's Response—Parker/Atofina stated that it agreed with NHTSA's proposal to include the 72-hour duration for the salt spray exposure. NHTSA in fact had asked for comments on increasing the exposure to 72 hours, but proposed that 24 hours of exposure be kept in FMVSS No. 106. Parker/Atofina provided no additional discussion on this subject.

SMC recommended that the corrosion resistance test also apply to plastic tubing in addition to the end fitting. NHTSA noted in the section discussing zinc chloride and methyl alcohol resistance that it may consider additional chemical resistance tests for air brake tubing, but it would first need to gather more information in this subject. After reviewing the comments, NHTSA is adopting the end fitting corrosion resistance test as proposed in the NPRM.

G. New Types of Brake Hose

The commenters brought to NHTSA's attention the following new types of brake hose. New hydraulic brake hose configurations have been developed in recent years that deviate from the conventional configuration of a length of hose with a fitting at each end. Intertek indicated that many brake hose assemblies are made of multiple-part sections (*e.g.*, three sections of hose and two sections of metal tubing), that make determination of free hose length and conducting the whip test difficult. Dana indicated that wire-reinforced hydraulic

brake hose is being used on leisure vehicles, motorcycles, and as a performance option for light vehicles and as an aftermarket product, and stated that it might be best to provide a separate section in FMVSS No. 106 for wire-reinforced hydraulic brake hose. Intertek noted that stainless steel braided brake hoses have properties that differ significantly from traditional synthetic rubber brake hoses. HPP indicated that plastic vacuum brake booster lines are being used, in lieu of traditional rubber vacuum brake hose, and recommended that a suitable industry standard be developed in cooperation with end users and tubing suppliers.

NHTSA agrees that new developments in brake hoses may warrant additional consideration for FMVSS No. 106 rulemaking. However, NHTSA believes it is appropriate to first complete the initial updating of FMVSS No. 106 before considering further upgrades.

H. Metallic Tubing and Pipe

Parker/Atofina recommended that requirements be adopted for metallic brake tubing and pipe as specified in SAE J1149 June 1991 *Metallic Air Brake System Tubing and Pipe.* It disagreed with NHTSA's NPRM statement that such materials were no longer widely used in air brake systems. However, as NHTSA noted in the NPRM (68 FR 26386), it did not propose to adopt SAE standards relating to copper tubing, galvanized steel pipe, or end fittings used with metallic tubing because even though these materials are occasionally used in chassis plumbing, they are not considered to be brake hoses. It would therefore not be appropriate to incorporate the substantial requirements of SAE J1149 into FMVSS No. 106. There were no other comments on this issue, and in this final rule, NHTSA is not including requirements for metal air brake tubing and pipe into FMVSS No. 106.

VI. Statutory Bases for the Final Rule

We have issued this final rule pursuant to our statutory authority. Under 49 U.S.C. Chapter 301, *Motor Vehicle Safety* (49 U.S.C. 30101 *et seq.*), the Secretary of Transportation is responsible for prescribing motor vehicle safety standards that are practicable, meet the need for motor vehicle safety, and are stated in objective terms. 49 U.S.C. 30111(a). When prescribing such standards, the Secretary must consider all relevant, available motor vehicle safety information. 49 U.S.C. 30111(b). The Secretary must also consider whether a proposed standard is reasonable, practicable, and appropriate for the type of motor vehicle or motor vehicle equipment for which it is prescribed and the extent to which the standard will further the statutory purpose of reducing traffic accidents and deaths and injuries resulting from traffic accidents. *Id.* Responsibility for promulgation of Federal motor vehicle safety standards was subsequently delegated to NHTSA. 49 U.S.C. 105 and 322; delegation of authority at 49 CFR 1.50.

As a Federal agency, before promulgating changes to a Federal motor vehicle safety standard, NHTSA also has a statutory responsibility to follow the informal rulemaking procedures mandated in the *Administrative Procedure Act* at 5 U.S.C. 553. Among these requirements are **Federal Register** publication of a general notice of proposed rulemaking, and giving interested persons an opportunity to participate in the rulemaking through submission of written data, views or arguments. After consideration of the public comments, we must incorporate into the rules adopted, a concise general statement of the rule's basis and purpose.

The agency has carefully considered these statutory requirements in promulgating this final rule to amend FMVSS No. 106. As previously discussed in detail, we have solicited public comment in an NPRM and have carefully considered the public comments before issuing this final rule. As a result, we believe that this final rule reflects consideration of all relevant available motor vehicle safety information. Consideration of all these statutory factors has resulted in the following decisions in this final rule.

This rulemaking began with NHTSA's proposal to adopt certain requirements relating to brake hoses, brake hose tubing, and brake hose fittings that are presently administered by the Federal Motor Carrier Safety Administration (FMCSA) into FMVSS No. 106. Since FMCSA proposed to remove brake hose provisions from its regulations, NHTSA believed it would meet the need for safety to incorporate the FMCSA requirements into FMVSS No. 106. In this way, NHTSA could continue to ensure the safety of commercial motor vehicle braking systems. NHTSA responded to an industry petition to include the FMCSA provisions into the FMVSSs.

In the NPRM, NHTSA also sought to update FMVSS No. 106, which has not been substantially updated in many years. Thus, in the NPRM, NHTSA compared SAE standards with FMVSS No. 106 provisions, and proposed to include the provisions that it believed were the more rigorous. When SAE standards are used, NHTSA proposed to use the most current SAE standards. NHTSA also believed that it would better meet the need for safety to require that all brake hoses, not only those to be used on commercial vehicles, meet the new, upgraded FMVSS No. 106 requirements.

Using this reasoning, NHTSA proposed to amend FMVSS No. 106's performance requirements and test procedures relating to: (a) Hydraulic brake hose; (b) air brake hose; (c) vacuum brake hose; (d) plastic air brake tubing; and (e) plastic air brake tubing assemblies and end fittings.

In response to the NPRM, NHTSA received public comments from 11 organizations and companies. The public commenters generally supported NHTSA's proposal to amend FMVSS No. 106 to include the latest requirements in the SAE brake hose standards. For many of the test conditions, the commenters provided detailed information on test methods and procedures.

We have thoroughly reviewed the public comments and amended the final rule to reflect the comments. In a few instances where we did not adopt a comment, we explain why we believed it would not meet the need for safety to adopt the comment. We believe that this final rule, which combines the most rigorous requirements of the latest SAE standards, and of FMVSS No. 106, meets the need for safety.

VII. Effective Date

In the NPRM, the agency proposed an effective date of two years after publication of a final rule (68 FR 35354). NHTSA received one comment on the effective date issue. SGPPL stated that it believes that two years to meet with the published changes would be sufficient. Accordingly, as proposed in the NPRM, this final rule will take effect two years after publication in today's edition of the **Federal Register**. At each manufacturer's discretion, optional early compliance will be permitted 60 days from the date this final rule is published in the **Federal Register**.

VIII. Rulemaking Analyses and Notices

A. Executive Order 12866 and DOT Regulatory Policies and Procedures

Executive Order 12866, ''Regulatory Planning and Review'' (58 FR 51735, October 4, 1993), provides for making determinations whether a regulatory action is ''significant'' and therefore subject to Office of Management and

Budget (OMB) review and to the requirements of the Executive Order. The Order defines a ''significant regulatory action'' as one that is likely to result in a rule that may:

(1) Have an annual effect on the economy of $100 million or more or adversely affect in a material way the economy, a sector of the economy, productivity, competition, jobs, the environment, public health or safety, or State, local, or Tribal governments or communities;

(2) Create a serious inconsistency or otherwise interfere with an action taken or planned by another agency;

(3) Materially alter the budgetary impact of entitlements, grants, user fees, or loan programs or the rights and obligations or recipients thereof; or

(4) Raise novel legal or policy issues arising out of legal mandates, the President's priorities, or the principles set forth in the Executive Order.

This notice was not reviewed under Executive Order 12866. Further, this notice was determined not to be significant within the meaning of the DOT Regulatory Policies and Procedures.

In this document, NHTSA incorporates performance requirements and test procedures that are currently contained and/or referenced in the Federal Motor Carrier Safety Regulations. Those performance requirements/test procedures are based on voluntary standards adopted by the Society of Automotive Engineers. Although NHTSA incorporates the most recent versions of these SAE requirements/procedures and to apply them to brake hoses, tubing, and fittings for all motor vehicles, not just commercial motor vehicles, the agency concludes that most, if not all, such hoses, tubing, and fittings are already designed to meet the SAE requirements/procedures. However, in the event that there are some brake hose products that would need to be modified to comply with the proposed regulations, the agency (1) estimates that it is a small proportion of brake hose products that would need modification, as most are believed to already comply; and (2) concludes that the manufacturers of the components used in producing such products are not small businesses.

For air brake hoses, both rubber hose and plastic tubing products, and hydraulic and vacuum brake hoses installed on vehicles that are typically used as commercial motor vehicles such as medium duty trucks, the agency concludes that all of the brake hose products already comply with the proposed regulations. The largest effect of the proposed regulations would be on the light vehicle sector including passenger cars and light trucks, of which approximately 16 million vehicles are produced each year. As the typical light vehicle is equipped with three to four brake hoses, 48 to 64 million hydraulic brake hose assemblies as installed in new vehicles would be affected, as well as an unknown quantity of replacement brake hoses for light vehicles, but probably a few million. In addition, the agency estimates that approximately 15.5 million vacuum brake hoses and/or assemblies are installed on these vehicles.

Since large quantities of brake hose material are needed to manufacture these brake hoses, the agency believes that there are large manufacturers that produce both hydraulic and vacuum brake hoses in such large quantities. There are many small companies that use the brake hose material and end fitting components to produce brake hose assemblies, but NHTSA does not anticipate that they would be affected by the proposed changes because they simply assemble already-compliant components supplied by the large manufacturers.

The agency does not have data on the number of hydraulic and vacuum brake hose assemblies that must be modified to meet the final rule. Based on an informal survey of available hydraulic and vacuum brake hose assemblies, the agency estimates that perhaps as many as 20 percent may need to be modified in some manner to comply with the final rule. Likewise, the agency does not know the cost to modify the manufacturing processes of the brake hose materials to comply with the final rule, but can assume that it would be for improved additives to elastomeric compounds or improved synthetic fibers used as reinforcing materials. Again, the agency does not have any data on the cost of manufacturing such materials, but estimates that the modification of such manufacturing processes would add not more than ten cents to the cost of each brake hose assembly.

The highest-cost estimate of the final rule is based on production of 64 million new and replacement hydraulic brake hose assemblies, plus 16 million new and replacement vacuum brake hoses/assemblies, for a total of 80 million total affected brake hoses. If 20 percent of these need to be modified to meet the final rule, at a cost of ten cents per hose, the total cost would be $1.6M.

In response to the NPRM, a brake hose manufacturer commented on the cost of purchasing new test equipment for the ultraviolet resistance test for plastic air brake tubing. NHTSA believes that if it is necessary to purchase new test equipment (which NHTSA questions), the cost of such equipment may be on the order of $5,000 to $10,000, a sum that would not have a significant effect on NHTSA's estimated cost of this rulemaking.

Therefore, the agency estimates the cost of complying with the changes resulting from the final rule to amend FMVSS No. 106 to be between zero and $1.6 million. This potential additional cost would not, however, be expected to have any impact on small businesses, but only on large manufacturers of brake hose materials that are produced in large quantities. Accordingly, the agency does not believe that this final rule would have any significant economic effects.

The DOT's regulatory policies and procedures require the preparation of a full regulatory evaluation, unless the agency finds that the impacts of a rulemaking are so minimal as not to warrant the preparation of a full regulatory evaluation. Since anecdotal evidence suggests that most, if not all, of these hose, tubing, and fittings are already compliant with the minimum performance requirements that the agency is applying in this final rule, the agency believes that the impacts of this rulemaking would be minimal. Thus, it has not prepared a full regulatory evaluation.

B. Regulatory Flexibility Act

Pursuant to the Regulatory Flexibility Act (5 U.S.C. 601 *et seq.*, as amended by the Small Business Regulatory Enforcement Fairness Act (SBREFA) of 1996), whenever an agency is required to publish a notice of rulemaking for any proposed or final rule, it must prepare and make available for public comment a regulatory flexibility analysis that describes the effect of the rule on small entities (*i.e.*, small businesses, small organizations, and small governmental jurisdictions). The Small Business Administration's regulations at 13 CFR Part 121 define a small business, in part, as a business entity ''which operates primarily within the United States.'' (13 CFR § 121.105(a)). No regulatory flexibility analysis is required if the head of an agency certifies that the rule will not have a significant economic impact on a substantial number of small entities. The SBREFA amended the Regulatory Flexibility Act to require Federal agencies to provide a statement of the factual basis for certifying that a rule will not have a significant economic impact on a substantial number of small entities.

NHTSA has considered the effects of this rulemaking action under the Regulatory Flexibility Act. As explained above, NHTSA is incorporating performance requirements and test procedures that are currently contained or referenced in the Federal Motor Carrier Safety Regulations. Those performance requirements/test procedures are based on voluntary standards adopted by the Society of Automotive Engineers. Although NHTSA incorporates the most recent versions of these SAE requirements/procedures and to apply them to brake hoses, tubing, and fittings for all motor vehicles, not just commercial motor vehicles, the agency believes that most, if not all, such hoses, tubing, and fittings are already designed to meet the most recent SAE requirements/procedures.

For the remaining hoses, tubing, and fittings, estimated at up to 20 percent of all hydraulic and vacuum brake hoses manufactured each year, the agency estimates the cost of complying with these requirements to be $1.6 million. Considering that the total number of hydraulic brake hose assemblies and vacuum brake hose/assemblies that would be subject to the requirements in this final rule is estimated to be approximately 80 million units annually, the agency estimates that the total annual effect of this final rule would be between zero and $1.6 million. Accordingly, I hereby certify that this final rule will not have a significant economic impact on a substantial number of small entities.

C. National Environmental Policy Act

NHTSA has analyzed this rulemaking action for the purposes of the National Environmental Policy Act. The agency has determined that implementation of this action would not have any significant impact on the quality of the human environment.

D. Executive Order 13132 (Federalism)

Executive Order 13132 requires NHTSA to develop an accountable process to ensure ''meaningful and timely input by State and local officials in the development of regulatory policies that have federalism implications.'' The Executive Order defines ''policies that have federalism implications'' to include regulations that have ''substantial direct effects on the States, on the relationship between the national government and the States, or on the distribution of power and responsibilities among the various levels of government.'' Under Executive Order 13132, NHTSA may not issue a regulation with Federalism implications, that imposes substantial direct compliance costs, and that is not required by statute, unless the Federal government provides the funds necessary to pay the direct compliance costs incurred by State and local governments, the agency consults with State and local governments, or the agency consults with State and local officials early in the process of developing the proposed regulation. NHTSA also may not issue a regulation with Federalism implications and that preempts State law unless the agency consults with State and local officials early in the process of developing the proposed regulation.

NHTSA has analyzed this rulemaking action in accordance with the principles and criteria set forth in Executive Order 13132. The agency has determined that this final rule will not have sufficient federalism implications to warrant consultation with State and local officials or the preparation of a federalism summary impact statement. The final rule will not have any substantial effects on the States, or on the current Federal-State relationship, or on the current distribution of power and responsibilities among the various local officials.

E. Civil Justice Reform

This final rule will not have any retroactive effect. Under 49 U.S.C. 30103, whenever a Federal motor vehicle safety standard is in effect, a State may not adopt or maintain a safety standard applicable to the same aspect of performance which is not identical to the Federal standard, except to the extent that the state requirement imposes a higher level of performance and applies only to vehicles procured for the State's use. 49 U.S.C. 30161 sets forth a procedure for judicial review of final rules establishing, amending, or revoking Federal motor vehicle safety standards. That section does not require submission of a petition for reconsideration or other administrative proceedings before parties may file suit in court.

F. Paperwork Reduction Act

Under the Paperwork Reduction Act of 1995, a person is not required to respond to a collection of information by a Federal agency unless the collection displays a valid Office of Management and Budget (OMB) control number. This final rule includes no new ''collections of information'' as that term is defined by the OMB in 5 CFR Part 1320.

G. National Technology Transfer and Advancement Act

Section 12(d) of the National Technology Transfer and Advancement Act of 1995 (NTTAA), Public Law 104–113, section 12(d) (15 U.S.C. 272) directs NHTSA to use voluntary consensus standards in its regulatory activities unless doing so would be inconsistent with applicable law or otherwise impractical. Voluntary consensus standards are technical standards (*e.g.*, materials specifications, test methods, sampling procedures, and business practices) that are developed or adopted by voluntary consensus standards bodies, such as the Society of Automotive Engineers (SAE). The NTTAA directs the agency to provide Congress, through the OMB, explanations when we decide not to use available and applicable voluntary consensus standards.

The changes that NHTSA makes in this final rule are, for the most part, based on voluntary consensus standards adopted by the Society of Automotive Engineers. Accordingly, this final rule is in compliance with Section 12(d) of NTTAA.

H. Unfunded Mandates Reform Act

Section 202 of the Unfunded Mandates Reform Act of 1995 (UMRA) requires Federal agencies to prepare a written assessment of the costs, benefits, and other effects of proposed or final rules that include a Federal mandate likely to result in the expenditure by State, local or tribal governments, in the aggregate, or by the private sector, of more than $100 million in any one year (adjusted for inflation with base year of 1995). Before promulgating a rule for which a written statement is needed, section 205 of the UMRA generally requires NHTSA to identify and consider a reasonable number of regulatory alternatives and adopt the least costly, most cost-effective, or least burdensome alternative that achieves the objectives of the rule. The provisions of section 205 do not apply when they are inconsistent with applicable law. Moreover, section 205 allows NHTSA to adopt an alternative other than the least costly, most cost-effective or least burdensome alternative if the agency publishes with the final rule an explanation why that alternative was not adopted.

This final rule would not result in the expenditure by State, local, or tribal governments, in the aggregate, or by the private sector of more than $100 million annually. The cost of complying with the requirements in this final rule is estimated to be between zero and $1.6M

annually. Accordingly, the agency has not prepared an Unfunded Mandates assessment.

I. Plain Language

Executive Order 12866 requires each agency to write all rules in plain language. Application of the principles of plain language includes consideration of the following questions:

—Have we organized the material to suit the public's needs?
—Are the requirements in the rule clearly stated?
—Does the rule contain technical language or jargon that is not clear?
—Would a different format (grouping and order of sections, use of headings, paragraphing) make the rule easier to understand?
—Would more (but shorter) sections be better?
—Could we improve clarity by adding tables, lists, or diagrams?
—What else could we do to make this rulemaking easier to understand?

If you have any responses to these questions, please include them in your comments to the agency.

J. Regulation Identifier Number (RIN)

The Department of Transportation assigns a regulation identifier number (RIN) to each regulatory action listed in the Unified Agenda of Federal Regulations. The Regulatory Information Service Center publishes the Unified Agenda in April and October of each year. You may use the RIN contained in the heading at the beginning of this document to find this action in the Unified Agenda.

List of Subjects in 49 CFR Part 571

Imports, Incorporation by Reference, Motor vehicle safety, Motor vehicles, Rubber and rubber products, and Tires.

■ In consideration of the foregoing, NHTSA amends 49 CFR part 571 as follows:

PART 571—FEDERAL MOTOR VEHICLE SAFETY STANDARDS

■ 1. The authority for part 571 continues to read as follows:

Authority: 49 U.S.C. 322, 30111, 30115, 30166, and 30177; delegation of authority at 49 CFR 1.50.

■ 2. Section 571.106 is amended by:
■ a. Adding in S4 the definition of ''Preformed'' in the appropriate alphabetical order;
■ b. Revising the first sentence of paragraph (b) of S5.2.2;
■ c. Revising the first sentence of paragraph (b) of S5.2.4;
■ d. Revising S5.3 through S5.3.2;
■ e. Revising Table I;
■ f. Revising S5.3.4;
■ g. Revising S5.3.6;
■ h. Revising S5.3.8 and S5.3.9;
■ i. Revising S5.3.11;
■ j. Adding S5.3.12 and S5.3.13;
■ k. Revising paragraph (b) of S6.1.3;
■ l. Revising paragraph (c) of S6.2;
■ m. Revising S6.4;
■ n. Revising S6.4.2;
■ o. Revising S6.5;
■ p. Removing S6.5.1 and S6.5.2;
■ q. Revising paragraphs (a) and (b) of S6.6.1;
■ r. Revising paragraph (b) of S6.8.2;
■ s. Revising S6.9;
■ t. Revising paragraphs (a) and (b) in S6.9.1;
■ u. Removing S6.9.1(c) through (f);
■ v. Adding Figure 3 following S6.9.1(b);
■ w. Revising S6.9.2;
■ x. Removing S6.9.3;
■ y. Adding S6.10 through S6.12;
■ z. Adding Figure 4 following S6.12.2;
■ aa. Revising S7.1;
■ bb. Revising the first sentence in paragraph (b), and paragraphs (d), and (e) of S7.2.1;
■ cc. Revising Table III;
■ dd. Revising the first sentence in paragraph (b) and paragraph (d) of S7.2.2;
■ ee. Revising S7.3, S7.3.1, S7.3.2, and S7.3.3;
■ ff. Revising Table IV;
■ gg. Revising S7.3.5 through S7.3.11;
■ hh. Revising paragraphs (a) and (b) of S8.1;
■ ii. Revising paragraphs (a) and (c) in S8.2;
■ jj. Adding paragraph (d) in S8.2;
■ kk. Revising paragraph (b) in S8.3.2;
■ ll. Revising S8.4;
■ mm. Revising the heading of S8.6;
■ nn. Revising S8.7;
■ oo. Adding S8.7.1 and S8.7.2;
■ pp. Adding Figure 5 and the table accompanying Figure 5, following S8.7.1;
■ qq. Revising S8.8;
■ rr. Revising in S8.9 the introductory sentence and paragraph (a);
■ ss. Adding S8.13 and S8.14;
■ tt. Revising S9.2 and S9.2.1 through S9.2.3;
■ uu. Revising S9.2.7 through S9.2.10;
■ vv. Removing S9.2.11;
■ ww. Revising S10.1 and S10.2;
■ xx. Revising paragraph (a) of S10.6;
■ yy. Redesignating Figure 3 as Figure 6, following S10.6;
■ zz. Revising S10.7;
■ aaa. Removing and reserving S10.8;
■ bbb. Revising paragraph (b) in S10.9.2;
■ ccc. Redesignating Figure 4 as Figure 7, following S10.9.2(b);
■ ddd. Revising S10.10;
■ eee. Revising S11 and S11.1;
■ fff. Adding Table VII, following S11.1;
■ ggg. Revising S11.2;
■ hhh. Adding S11.2.1 through S11.2.3.1;
■ iii. Revising S11.3;
■ jjj. Adding S11.3.1 through S11.3.5;
■ kkk. Adding Table VIII, following S11.3.5;
■ lll. Adding S11.3.6 through S11.3.24;
■ mmm. Adding S12;
■ nnn. Adding S12.1 through S12.7;
■ ooo. Adding Figure 8, and the table accompanying Figure 8, following S12.7;
■ ppp. Adding S12.8 through S12.25;
■ qqq. Adding S13; and
■ rrr. Adding S13.1 through S13.3.

The additions and revisions read as follows:

§ 571.106 Standard No. 106; Brake hoses.

* * * * *

S4. *Definitions.*

* * * * *

Preformed means a brake hose that is manufactured with permanent bends and is shaped to fit a specific vehicle without further bending.

* * * * *

S5. *Requirements—Hydraulic brake hose, brake hose assemblies, and brake hose end fittings.*

* * * * *

S5.2.2 * * *

* * * * *

(b) A designation that identifies the manufacturer of the hose, which shall be filed in writing with: Office of Vehicle Safety Compliance, Equipment Division NVS–222, National Highway Traffic Safety Administration, 400 Seventh St. SW., Washington, DC 20590.* * *

* * * * *

S5.2.4 * * *

* * * * *

(b) A designation that identifies the manufacturer of the hose assembly, which shall be filed in writing with: Office of Vehicle Safety Compliance, Equipment Division NVS–222, National Highway Traffic Safety Administration, 400 Seventh St. SW., Washington, DC 20590. * * *

* * * * *

S5.3 *Test requirements.* A hydraulic brake hose assembly or appropriate part thereof shall be capable of meeting any of the requirements set forth under this heading, when tested under the conditions of S13 and the applicable procedures of S6. However, a particular hose assembly or appropriate part thereof need not meet further requirements after having been subjected to and having met the constriction requirement (S5.3.1) and any one of the requirements specified in S5.3.2 through S5.3.13.

S5.3.1 *Constriction.* Except for that part of an end fitting which does not contain hose, every inside diameter of any section of a hydraulic brake hose assembly shall be not less than 64 percent of the nominal inside diameter of the brake hose (S6.12).

S5.3.2 *Expansion and burst strength.* The maximum expansion of a hydraulic brake hose assembly at 1,000 psi, 1,500 psi and 2,900 psi shall not exceed the values specified in Table I (S6.1), except that a brake hose larger than 3/16 inch or 5 mm is not subject to the 2,900 psi expansion test requirements. The hydraulic brake hose assembly shall then withstand water pressure of 4,000 psi for 2 minutes without rupture, and then shall not rupture at less than 7,000 psi for a 1/8 inch, 3 mm, or smaller diameter hose, or at less than 5,000 psi for a hose with a diameter larger than 1/8 inch or 3 mm (S6.2).

TABLE I.—MAXIMUM EXPANSION OF FREE LENGTH BRAKE HOSE, CC/FT

Hydraulic brake hose, inside diameter	Test pressure					
	1,000 psi		1,500 psi		2,900 psi	
	Regular expansion hose	Low expansion hose	Regular expansion hose	Low expansion hose	Regular expansion hose	Low expansion hose
1/8 inch, or 3 mm, or less	0.66	0.33	0.79	0.42	1.21	0.61
3/16 inch, or 4 to 5 mm	0.86	0.55	1.02	0.72	1.67	0.91
1/4 inch, or 6 mm, or more	1.04	0.82	1.30	1.17	*	*

*Not applicable.

* * * * *

S5.3.4 *Tensile strength.* A hydraulic brake hose assembly shall withstand a pull of 325 pounds without separation of the hose from its end fittings during a slow pull test, and shall withstand a pull of 370 pounds without separation of the hose from its end fittings during a fast pull test (S6.4).

* * * * *

S5.3.6 *Water absorption and tensile strength.* A hydraulic brake hose assembly, after immersion in water for 70 hours (S6.5), shall withstand a pull of 325 pounds without separation of the hose from its end fittings during a slow pull test, and shall withstand a pull of 370 pounds without separation of the hose from its end fittings during a fast pull test (S6.4).

* * * * *

S5.3.8 *Low-temperature resistance.* A hydraulic brake hose conditioned at a temperature between minus 49 degrees Fahrenheit (minus 45 degrees Celsius) and minus 54 degrees Fahrenheit (minus 48 degrees Celsius) for 70 hours shall not show cracks visible without magnification when bent around a cylinder as specified in S6.6 (S6.6).

S5.3.9 *Brake fluid compatibility, constriction, and burst strength.* Except for brake hose assemblies designed for use with mineral or petroleum-based brake fluids, a hydraulic brake hose assembly shall meet the constriction requirement of S5.3.1 after having been subjected to a temperature of 248 degrees Fahrenheit (120 degrees Celsius) for 70 hours while filled with SAE RM–66–04 ''Compatibility Fluid,'' as described in Appendix B of SAE Standard J1703, revised JAN 1995, ''Motor Vehicle Brake Fluid.'' This incorporation by reference was approved by the Director of the Federal Register in accordance with 5 U.S.C. 552(a) and 1 CFR Part 51. Copies may be obtained from the Society of Automotive Engineers, Inc., 400 Commonwealth Drive, Warrendale, PA 15096–0001. Copies may be inspected at the National Highway Traffic Safety Administration, Technical Information Services, 400 Seventh Street, SW., Plaza Level, Room 403, Washington, DC 20590, or at the National Archives and Records Administration (NARA). For information on the availability of this material at NARA, call 202–741–6030, or go to: *http://www.archives.gov/federal_register/code_of_federal regulations/ibr_locations.html.* It shall then withstand water pressure of 4,000 psi for 2 minutes and thereafter shall not rupture at less than 5,000 psi (S6.2 except all sizes of hose are tested at 5,000 psi).

* * * * *

S5.3.11 *Dynamic ozone test.* A hydraulic brake hose shall not show cracks visible without magnification after having been subjected to a 48-hour dynamic ozone test (S6.9).

S5.3.12 *High temperature impulse test.* A brake hose assembly tested under the conditions in S6.10:

(a) Shall withstand pressure cycling for 150 cycles, at 295 degrees Fahrenheit (146 degrees Celsius) without leakage;

(b) Shall not rupture during a 2-minute, 4,000 psi pressure hold test, and;

(c) Shall not burst at a pressure less than 5,000 psi.

S5.3.13 *End fitting corrosion resistance.* After 24 hours of exposure to salt spray, a hydraulic brake hose end fitting shall show no base metal corrosion on the end fitting surface except where crimping or the application of labeling information has caused displacement of the protective coating (S6.11).

S6. *Test procedures—Hydraulic brake hose, brake hose assemblies, and brake hose end fittings.*

* * * * *

S6.1.3 *Calculation of expansion at 1,000 psi, 1,500 psi and 2,900 psi.*

* * * * *

(b) Close the valve to the burette, apply pressure at the rate of 1,500 psi per minute, and seal 1,000 psi in the hose (1,500 in second series, and 2,900 psi in third series).

* * * * *

S6.2 *Burst strength test.*

* * * * *

(c) After 2 minutes at 4,000 psi, increase the pressure at the rate of 15,000 psi per minute until the pressure exceeds 5,000 psi for a brake hose larger than 1/8 inch or 3 mm diameter, or until the pressure exceeds 7,000 psi for a brake hose of 1/8 inch, 3 mm, or smaller diameter.

* * * * *

S6.4 *Tensile strength test.* Utilize a tension testing machine conforming to the requirements of American Society for Testing and Materials (ASTM) E4–03, ''Standard Practices for Force Verification of Testing Machines,'' and provided with a recording device to measure the force applied. This incorporation by reference was approved by the Director of the Federal Register in accordance with 5 U.S.C. 552(a) and 1 CFR Part 51. Copies may be obtained from the American Society for Testing and Materials (ASTM) International, 100 Barr Harbor Drive,

P.O. Box C700, West Conshohocken, PA 19428–2959. Copies may be inspected at the National Highway Traffic Safety Administration, Technical Information Services, 400 Seventh St., S.W., Plaza Level, Room 403, Washington, D.C. 20590, or at the National Archives and Records Administration (NARA). For information on the availability of this material at NARA, call 202–741–6030, or go to: *http://www.archives.gov/federal_register/code_of_federal regulations/ibr_locations.html.*

* * * * *

S6.4.2 *Operation.* (a) Conduct the slow pull test by applying tension at a rate of 1 inch per minute travel of the moving head until separation occurs.

(b) Conduct the fast pull test by applying tension at a rate of 2 inches per minute travel of the moving head until separation occurs.

* * * * *

S6.5 *Water absorption sequence tests.* (a) Prepare three brake hose assemblies and measure the free length of the hose assemblies.

(b) Immerse the brake hose assemblies in distilled water at 185 degrees Fahrenheit (85 degrees Celsius) for 70 hours. Remove the brake hose assemblies from the water and condition in air at room temperature for 30 minutes.

(c) Conduct the tests in S6.2, S6.3, and S6.4, using a different hose for each sequence.

S6.6 *Low temperature resistance test.*

S6.6.1 *Preparation.* (a) Remove hose armor, if any, and condition the hose in a straight position in air at a temperature between minus 49 degrees Fahrenheit and minus 54 degrees Fahrenheit (minus 45 degrees Celsius and minus 48 degrees Celsius) for 70 hours.

(b) Condition a cylinder in air at a temperature between minus 49 degrees Fahrenheit and minus 54 degrees Fahrenheit (minus 45 degrees Celsius and minus 48 degrees Celsius) for 70 hours, using a cylinder of 2½ inches in diameter for tests of hose less than ⅛ inch or 3mm, 3 inches in diameter for tests of ⅛ inch or 3 mm hose, 3½ inches in diameter for tests of 3/16 to ¼ inch hose or 4 mm to 6 mm hose, and 4 inches in diameter for tests of hose greater than ¼ inch or 6 mm in diameter.

* * * * *

S6.8.2 *Exposure to ozone.*

* * * * *

(b) Immediately thereafter, condition the hose on the cylinder for 70 hours in an exposure chamber having an ambient air temperature of 104 degrees Fahrenheit (40 degrees Celsius) during the test and containing air mixed with ozone in the proportion of 100 parts of ozone per 100 million parts of air by volume.

* * * * *

S6.9 *Dynamic ozone test.*

S6.9.1 *Apparatus.* Utilize a test apparatus shown in Figure 3 which is constructed so that:

(a) It has a fixed pin with a vertical orientation over which one end of the brake hose is installed.

(b) It has a movable pin that is oriented 30 degrees from vertical, with the top of the movable pin angled towards the fixed pin. The moveable pin maintains its orientation to the fixed pin throughout its travel in the horizontal plane. The other end of the brake hose is installed on the movable pin.

BILLING CODE 4910–59–P

Figure 3. Dynamic Ozone Test Apparatus

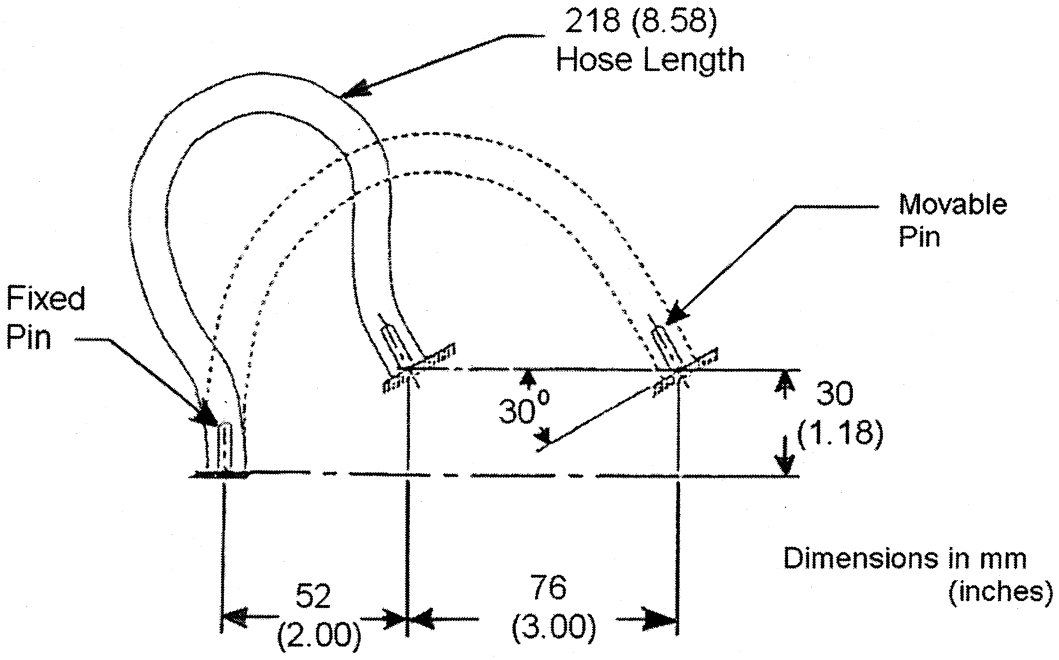

S6.9.2 *Preparation.* (a) Precondition the hose assembly by laying it on a flat surface in an unstressed condition, at room temperature, for 24 hours.

(b) Cut the brake hose assembly to a length of 8.6 inches (218 mm), such that no end fittings remain on the cut hose.

(c) Mount the brake hose onto the test fixture by fully inserting the fixture pins into each end of the hose. Secure the hose to the fixture pins using a band clamp at each end of the hose.

(d) Place the test fixture into an ozone chamber

(e) Stabilize the atmosphere in the ozone chamber so that the ambient temperature is 104 °F (40 degrees Celsius) and the air mixture contains air mixed with ozone in the proportion of 100 parts of ozone per 100 million parts of air by volume. This atmosphere is to remain stable throughout the remainder of the test.

(f) Begin cycling the movable pin at a rate of 0.3 Hz. Continue the cycling for 48 hours.

(g) At the completion of 48 hours of cycling, remove the test fixture from the ozone chamber. Without removing the hose from the test fixture, visually examine the hose for cracks without magnification, ignoring areas immediately adjacent to or within the area covered by the band clamps. Examine the hose with the movable pin at any point along its travel.

S6.10 *High temperature impulse test.*

S6.10.1 *Apparatus.* (a) A pressure cycling machine to which one end of the brake hose assembly can be attached, with the entire hose assembly installed vertically inside of a circulating air oven. The machine shall be capable of increasing the pressure in the hose from zero psi to 1600 psi, and decreasing the pressure in the hose from 1600 psi to zero psi, within 2 seconds.

(b) A circulating air oven that can reach a temperature of 295 degrees Fahrenheit (146 degrees Celsius) within 30 minutes, and that can maintain a constant 295 degrees F (146 degrees Celsius) thereafter, with the brake hose assembly inside of the oven and attached to the pressure cycling machine.

(c) A burst test apparatus to conduct testing specified in S6.2

S6.10.2 *Preparation.* (a) Connect one end of the hose assembly to the pressure cycling machine and plug the other end of the hose. Fill the pressure cycling machine and hose assembly with SAE RM–66–04 ''Compatibility Fluid,'' as described in Appendix B of SAE Standard J1703, revised JAN 1995 ''Motor Vehicle Brake Fluid,'' and bleed all gases from the system.

(b) Place the brake hose assembly inside of the circulating air oven in a vertical position. Increase the oven temperature to 295 degrees F (146 degrees Celsius) and maintain this temperature throughout the pressure cycling test.

(c) During each pressure cycle, the pressure in the hose is increased from zero psi to 1600 psi and held constant for 1 minute, then the pressure is decreased from 1600 psi to zero psi and held constant for 1 minute. Perform 150 pressure cycles on the brake hose assembly.

(d) Remove the brake hose assembly from the oven, disconnect it from the pressure cycling machine, and drain the fluid from the hose. Cool the brake hose assembly at room temperature for 45 minutes.

(e) Wipe the brake hose using acetone to remove residual Compatibility Fluid. Conduct the burst strength test in S6.2, except all sizes of hose are tested at 5,000 psi.

S6.11 *End fitting corrosion test.* Utilize the apparatus described in ASTM B117–03, ''Standard Practice for Operating Salt Spray (Fog) Apparatus''. This incorporation by reference was approved by the Director of the Federal Register in accordance with 5 U.S.C. 552(a) and 1 CFR Part 51. Copies may be obtained from the American Society for Testing and Materials (ASTM) International, 100 Barr Harbor Drive, P.O. Box C700, West Conshohocken, PA 19428–2959. Copies may be inspected at the National Highway Traffic Safety Administration, Technical Information Services, 400 Seventh St., SW., Plaza Level, Room 403, Washington, DC 20590, or at the National Archives and Records Administration (NARA). For information on the availability of this material at NARA, call (202) 741–6030, or go to: *http://www.archives.gov/federal_register/code_of_federal regulations/ibr_locations.html.*

S6.11.1 *Construction. Construct the salt spray chamber so that:*

(a) The construction material does not affect the corrosiveness of the fog.

(b) The hose assembly is supported or suspended 30 degrees from the vertical and parallel to the principal direction of the horizontal flow of fog through the chamber.

(c) The hose assembly does not contact any metallic material or any material capable of acting as a wick

(d) Condensation which falls from the assembly does not return to the solution reservoir for respraying.

(e) Condensation from any source does not fall on the brake hose assemblies or the solution collectors.

(f) Spray from the nozzles is not directed onto the hose assembly.

S6.11.2 *Preparation.* (a) Plug each end of the hose assembly.

(b) Mix a salt solution five parts by weight of sodium chloride to 95 parts of distilled water, using sodium chloride substantially free of nickel and copper, and containing on a dry basis not more than 0.1 percent of sodium iodide and not more than 0.3 percent total impurities. Ensure that the solution is free of suspended solids before the solution is atomized.

(c) After atomization at 95 degrees Fahrenheit (35 degrees Celsius), ensure that the collected solution is in the PH range of 6.5 to 7.2. Make the PH measurements at 77 degrees Fahrenheit (28 degrees Celsius).

(d) Maintain a compressed air supply to the nozzle or nozzles free of oil and dirt and between 10 and 25 psi.

S6.11.3 *Operation.* Subject the brake hose assembly to the salt spray continuously for 24 hours.

(a) Regulate the mixture so that each collector will collect from 1 to 2 milliliters of solution per hour for each 80 square centimeters of horizontal collecting area.

(b) Maintain exposure zone temperature at 95 degrees Fahrenheit (35 degrees Celsius).

(c) Upon completion, remove the salt deposit from the surface of the hose by washing gently or dipping in clean running water not warmer than 100 degrees Fahrenheit (38 degrees Celsius) and then drying immediately.

S6.12 *Constriction test.* Brake hose constriction test requirements shall be met using at least one of the methods specified in S6.12.1, S6.12.2, or S6.12.3.

S6.12.1 *Plug gauge.* (a) Utilize a plug gauge as shown in Figure 4. Diameter ''A'' is equal to 64 percent of the nominal inside diameter of the hydraulic brake hose being tested.

(b) Brake hose assemblies that are to be used for additional testing have constriction testing only at each end fitting. Other brake hose assemblies may be cut into 3-inch lengths to permit constriction testing of the entire assembly. Hose assemblies with end fittings that do not permit entry of the gauge (*e.g.*, restrictive orifice or banjo fitting) are cut 3 inches from the point at which the hose terminates in the end fitting and then tested from the cut end.

(c) Hold the brake hose in a straight position and vertical orientation.

(d) Place the spherical end of the plug gauge just inside the hose or end fitting. If the spherical end will not enter the hose or end fitting using no more force than gravity acting on the plug gauge,

this constitutes failure of the constriction test.

(e) Release the plug gauge. Within 3 seconds, the plug gauge shall fall under the force of gravity alone up to the handle of the gauge. If the plug gauge does not fully enter the hose up to the handle of the gauge within three seconds, this constitutes failure of the constriction test.

S6.12.2 *Extended plug gauge.* (a) The test in 6.12.1 may be conducted with an extended plug gauge to enable testing of the entire brake hose from one end fitting, without cutting the brake hose. The extended plug gauge weight and spherical diameter specifications are as shown in Figure 4, but the handle portion of the gauge may be deleted and the gauge length may be greater than 3 inches.

(b) The required performance of the extended plug gauge in S6.12.1(e) is that after the plug gauge is released, the extended plug gauge shall fall under the force of gravity alone at an average rate of 1 inch per second until the spherical diameter of the extended gauge passes through all portions of the brake hose assembly containing hose. If the extended plug gauge does not pass through all portions of the brake hose assembly containing hose at an average rate of 1 inch per second, this constitutes failure of the constriction test.

BILLING CODE 4910–59–P

FIGURE 4. CONSTRICTION TEST PLUG GAUGE

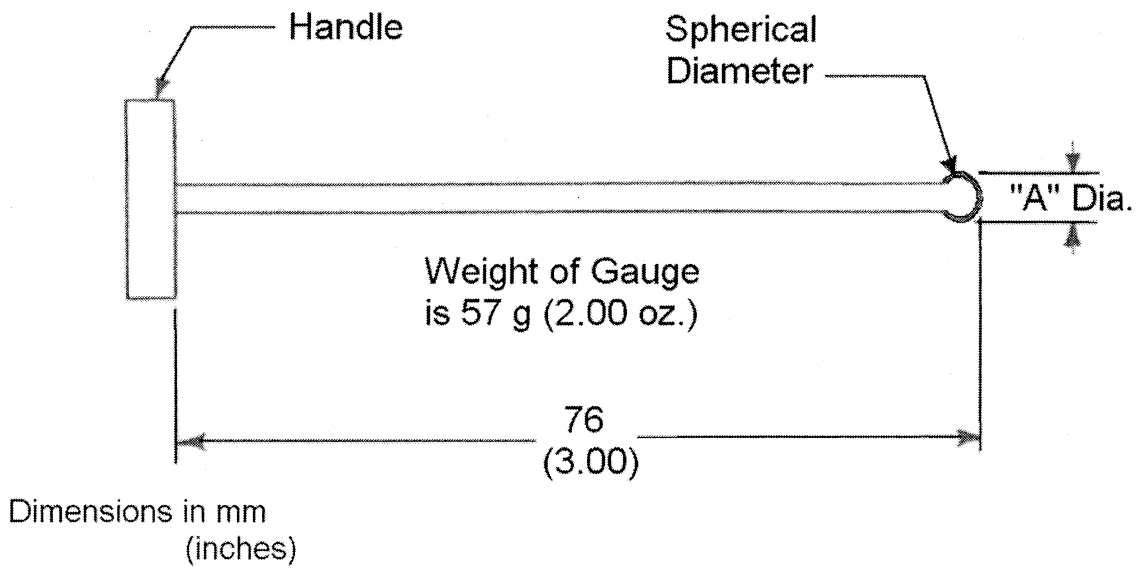

S6.12.3 *Drop ball test.* (a) Utilize a rigid spherical ball with a diameter equal to 64 percent of the nominal inside diameter of the hydraulic brake hose being tested. The weight of the spherical ball shall not exceed 2 ounces (57 grams).

(b) Hold the brake hose in a straight position and vertical orientation.

(c) Hold the ball just above the end fitting.

(d) Release the ball. The ball shall fall under the force of gravity alone completely through all portions of the brake hose assembly containing hose, at an average rate of 1 inch per second. Failure of the ball to pass completely through all portions of the brake hose assembly containing hose, at an average rate of 1 inch per second, constitutes failure of the constriction test.

* * * * *

S7.1 *Construction.* Each air brake hose assembly shall be equipped with permanently attached brake hose end fittings or reusable brake hose end fittings. Each air brake hose constructed of synthetic or natural elastomeric rubber shall conform to the dimensional requirements specified in Table III, except for brake hose manufactured in metric sizes.

* * * * *

S7.2.1 Hose. * * *

* * * * *

(b) A designation that identifies the manufacturer of the hose, which shall be filed in writing with: Office of Vehicle Safety Compliance, Equipment Division NVS–222, National Highway Traffic Safety Administration, 400 Seventh St. SW., Washington, DC 20590.* * *

* * * * *

(d) The nominal inside diameter of the hose expressed in inches or fractions of inches or in millimeters. The abbreviation ''mm'' shall follow hose sizes that are expressed in millimeters. (Examples: ⅜, ½ (½SP in the case of ½ inch special air brake hose), 4mm, 6mm.)

(e) The type designation corresponding to the brake hose dimensions in Table III. Type A shall be labeled with the letter ''A'', Type AI shall be labeled with the letters ''AI'', and type AII shall be labeled with the letters ''AII''. Metric air brake hose shall be labeled with the letter ''A.''

TABLE III.—AIR BRAKE HOSE DIMENSIONS. INSIDE DIAMETER (ID) AND OUTSIDE DIAMETER (OD) DIMENSIONS IN INCHES (MILLIMETERS)

TYPE A—HOSE SIZE—NOMINAL INSIDE DIAMETER

	1/4	5/16	3/8(1)	7/16(1)	1/2 SP(1)	5/8
Min.	0.277	0.289	0.352	0.407	0.469	0.594
I.D.	(5.8)	(7.3)	(8.9)	(10.3)	(11.9)	(15.1)
Max.	0.273	0.335	0.398	0.469	0.531	0.656
I.D.	(6.9)	(8.5)	(10.1)	(11.9)	(13.5)	(16.7)
Min.	0.594	0.656	0.719	0.781	0.844	1.031
O.D.	(15.1)	(16.7)	(18.3)	(19.8)	(21.4)	(26.2)
Max.	0.656	0.719	0.781	0.843	0.906	1.094
O.D.	(16.7)	(18.3)	(19.8)	(21.4)	(23.0)	(27.8)

TYPE AI(2)—HOSE SIZE—NOMINAL INSIDE DIAMETER

	3/16	1/4	5/16	13/32	1/2	5/8
Min.	0.188	0.250	0.312	0.406	0.500	0.625
I.D.	(4.8)	(6.4)	(7.9)	(10.3)	(12.7)	(15.9)
Max.	0.214	0.281	0.343	0.437	0.539	0.667
I.D.	(5.4)	(7.1)	(8.7)	(11.1)	(13.7)	(16.9)
Min.	0.472	0.535	0.598	0.714	0.808	0.933
O.D.	(12.0)	(13.6)	(15.1)	(18.1)	(20.5)	(23.7)
Max.	0.510	0.573	0.636	0.760	0.854	0.979
O.D.	(13.0)	(14.6)	(16.2)	(19.3)	(21.7)	(24.9)

TYPE AII(2)—HOSE SIZE—NOMINAL INSIDE DIAMETER

	3/16	1/4	5/16	13/32	1/2	5/8
Min.	0.188	0.250	0.312	0.406	0.500	0.625
I.D.	(4.8)	(6.4)	(7.9)	(10.3)	(12.7)	(15.9)
Max.	0.214	0.281	0.343	0.437	0.539	0.667
I.D.	(5.4)	(7.1)	(8.7)	(11.1)	(13.7)	(16.9)
Min.	0.500	0.562	0.656	0.742	0.898	1.054
O.D.	(12.7)	(14.3)	(16.7)	(18.8)	(22.8)	(26.8)
Max.	0.539	0.602	0.695	0.789	0.945	1.101
O.D.	(13.7)	(15.3)	(17.7)	(20.1)	(24.0)	(27.9)

Notes:
(1) Type A, sizes 3/8, 7/16, and 1/2 Special can be assembled with reusable end fittings. All sizes can be assembled using permanently-attached (crimped) end fittings.
(2) Types AI and AII, all sizes, can be assembled with reusable or permanently-attached (crimped) end fittings.

S7.2.2 *End fittings.* * * *

* * * * *

(b) A designation that identifies the manufacturer of that component of the fitting, which shall be filed in writing with: Office of Vehicle Safety Compliance, Equipment Division NVS–222, National Highway Traffic Safety Administration, 400 Seventh St. S.W., Washington, DC 20590. * * *

* * * * *

(d) The nominal inside diameter of the hose to which the fitting is properly attached expressed in inches or fractions of inches or in millimeters. (See examples in S7.2.1 (d).) The abbreviation ''mm'' shall follow hose sizes that are expressed in millimeters.

* * * * *

S7.3 *Test requirements.* Each air brake hose assembly or appropriate part thereof shall be capable of meeting any of the requirements set forth under this heading, when tested under the conditions of S13 and the applicable procedures of S8. However, a particular hose assembly or appropriate part thereof need not meet further requirements after having met the constriction requirement (S7.3.1) and then having been subjected to any one of the requirements specified in S7.3.2 through S7.3.14.

S7.3.1 *Constriction.* Every inside diameter of any section of an air brake hose assembly shall not be less than 66 percent of the nominal inside diameter of the brake hose. (S8.14)

S7.3.2 *High temperature resistance.* An air brake hose shall not show external or internal cracks, charring, or disintegration visible without magnification when straightened after being bent for 70 hours at 212 degrees Fahrenheit (100 degrees Celsius) over a small test cylinder having the radius specified in Table IV for the size of hose tested. (S8.1)

S7.3.3 *Low temperature resistance.* The inside and outside surfaces of an air brake hose shall not show cracks as a result of conditioning at minus 40 degrees Fahrenheit (minus 40 degrees Celsius) for 70 hours when bent around a large test cylinder having the radius specified in Table IV for the size of hose tested (S8.2).

TABLE IV.—AIR BRAKE HOSE DIAMETERS AND TEST CYLINDER RADII

Nominal hose inside diameter, inches[1]	3/16	1/4	5/16	3/8	13/32	7/16, 1/2	5/8
Nominal hose inside diameter, millimeters[1]	4, 5	6	8	.....	10	12	16
Small test cylinder, radius in inches (millimeters)[2]	1 (25)	1 1/2 (38)	1 3/4 (45)	1 3/4 (45)	1 7/8 (48)	2 (51)	2 1/2 (64)

TABLE IV.—AIR BRAKE HOSE DIAMETERS AND TEST CYLINDER RADII—Continued

Large test cylinder, radius in inches (millimeters)[3]	2 (51)	2½ (64)	3 (76)	3½ (89)	3½ (89)	4 (102)	4½ (114)

Notes:
[1] These sizes are listed to provide test cylinder radii for brake hoses manufactured in these sizes. They do not represent conversions.
[2] Small test cylinders are used for the high temperature resistance test.
[3] Large test cylinders are used for the low temperature resistance, ozone resistance, and adhesion of wire-reinforced hose tests.

* * * * *

S7.3.5 *Ozone resistance.* An air brake hose assembly shall not show cracks visible under 7-power magnification after exposure to ozone for 70 hours at 104 degrees Fahrenheit (49 degrees Celsius) when bent around a test cylinder of the radius specified in Table IV for the size of hose tested (S8.4).

S7.3.6 *Length change.* An air brake hose shall not contract in length more than 7 percent nor elongate more than 5 percent when subjected to air pressure of 200 psi (S8.5).

S7.3.7 *Adhesion.* (a) Except for hose reinforced by wire, an air brake hose shall withstand a tensile force of 8 pounds per inch of length before separation of adjacent layers (S8.6).

(b) An air brake hose reinforced by wire shall permit a steel ball to roll freely along the entire length of the inside of the hose when the hose is subjected to a vacuum of 25 inches of Hg and bent around a test cylinder (S8.13).

S7.3.8 *Flex strength and air pressure leakage.* An air brake hose assembly of the length specified in the table accompanying Figure 5, when subjected to a flex test and internal pressure cycling, shall be capable of having its internal pressure increased from zero to 140 psi within 2 minutes with pressurized air supplied through an orifice (S8.7).

S7.3.9 *Corrosion resistance and burst strength.* An air brake hose assembly exposed to salt spray shall not rupture when exposed to hydrostatic pressure of 900 psi (S8.8).

S7.3.10 *Tensile strength.* An air brake hose assembly designed for use between a frame and axle or between a towed and towing vehicle shall withstand, without separation of the hose from its end fittings, a pull of 250 pounds if it is ¼ inch, 6 mm, or less in nominal inside diameter, or a pull of 325 pounds if it is larger than ¼ inch or 6 mm in nominal inside diameter. An air brake hose assembly designed for use in any other application shall withstand, without separation of the hose from its end fittings, a pull of 50 pounds if it is ¼ inch, 6 mm, or less in nominal inside diameter, 150 pounds if it is larger than ¼ inch or 6 mm and equal to or smaller than ½ inch or 12 mm in nominal inside diameter, or 325 pounds if it is larger than ½ inch or 12 mm in nominal inside diameter (S8.9).

S7.3.11 *Water absorption and tensile strength.* After immersion in distilled water for 70 hours, an air brake hose assembly designed for use between a frame and axle or between a towed and a towing vehicle shall withstand, without separation of the hose from its end fittings, a pull of 250 pounds if it is ¼ inch or less or 6 mm or less in nominal inside diameter, or a pull of 325 pounds if it is larger than ¼ inch or 6 mm in nominal inside diameter. After immersion in distilled water for 70 hours, an air brake hose assembly designed for use in any other application shall withstand, without separation of the hose from its end fittings, a pull of 50 pounds if it is ¼ inch or 6 mm or less in nominal inside diameter, 150 pounds if it is larger than ¼ inch or 6 mm and equal to or smaller than ½ inch or 12 mm in nominal inside diameter, or 325 pounds if it is larger than ½ inch or 12 mm in nominal inside diameter. (S8.10)

* * * * *

S8.1 *High temperature resistance test.*

(a) Utilize a small test cylinder with a radius specified in Table IV for the size of hose tested.

(b) Bind the hose around the cylinder and condition it in an air oven for 70 hours at 212 degrees Fahrenheit (100 degrees Celsius).

* * * * *

S8.2 *Low temperature resistance test.* (a) Utilize a large test cylinder with a radius specified in Table IV for the size of hose tested.

* * * * *

(c) With the hose and cylinder at minus 40 degrees Fahrenheit (minus 40 degrees Celsius), bend the hose 180 degrees around the cylinder at a steady rate in a period of 3 to 5 seconds. Remove the hose from the test cylinder and visibly examine the exterior of the hose for cracks without magnification.

(d) Allow the hose to warm at room temperature for 2 hours. All reusable end fittings are removed from the hose. All permanently-attached end fittings are cut away from the hose. Cut through one wall of the hose longitudinally along its entire length. Unfold the hose to permit examination of the interior surface. Visibly examine the interior of the hose for cracks without magnification.

* * * * *

S8.3.2 *Measurement.*

* * * * *

(b) Immerse each specimen in ASTM IRM 903 oil for 70 hours at 212 degrees Fahrenheit (100 degrees Celsius) and then cool in ASTM IRM 903 oil at room temperature for 30 to 60 minutes.

* * * * *

S8.4 *Ozone resistance test.* Conduct the test specified in S6.8, using air brake hose, except use the large test cylinder specified in Table IV for the size of hose tested.

* * * * *

S8.6 *Adhesion test for air brake hose not reinforced by wire.*

* * * * *

S8.7 *Flex strength and air pressure test.*

S8.7.1 *Apparatus.* A flex testing machine with a fixed hose assembly attachment point and a movable hose assembly attachment point, which meets the dimensional requirements of Figure 5 for the size of hose being tested. The attachment points connect to the end fittings on the hose assembly without leakage and, after the hose assembly has been installed for the flex test, are restrained from rotation. The movable end has a linear travel of 6 inches and a cycle rate of 100 cycles per minute. The machine is capable of increasing the air pressure in the hose assembly from zero to 150 psi within 2 seconds, and decreasing the air pressure in the hose assembly from 150 to zero psi within 2 seconds.

BILLING CODE 4910–59–P

FIGURE 5. FLEX TEST APPARATUS

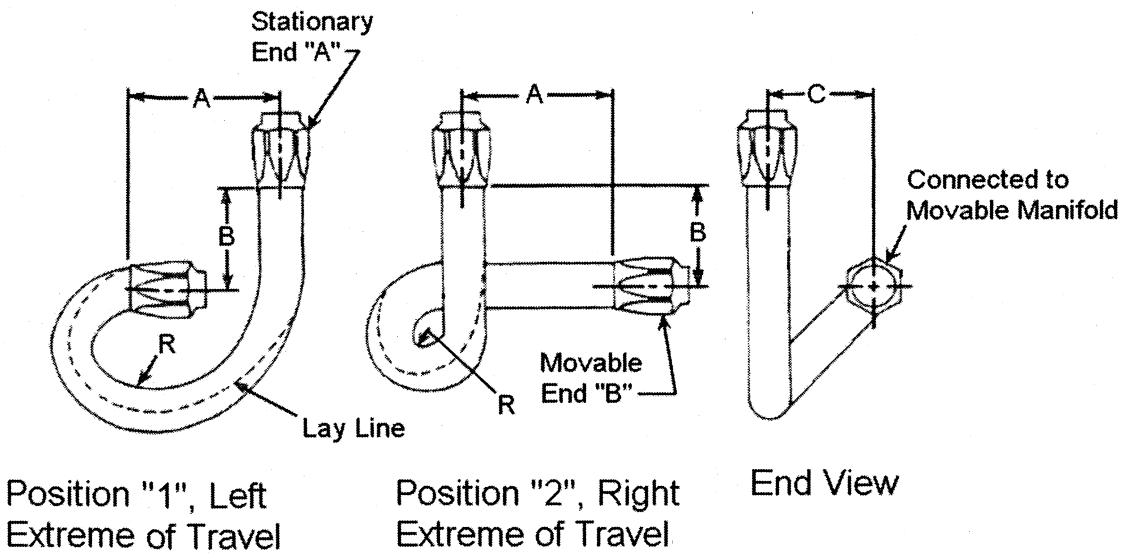

TABLE ACCOMPANYING FIGURE 5.—DIMENSIONS IN INCHES (MILLIMETERS)

Free hose length	Nominal hose inside diameter	Dimensions							
		Position "1"				Position "2"			
		A	B	C	R (1)	A	B	C	R (1)
10.00 (254)	3/16, 1/4	3.00 (76)	2.75 (70)	3.75 (95)	1.40 (34)	3.00 (76)	2.75 (70)	3.75 (95)	1.20 (30)
11.00 (279)	5/16, 3/8, 13/32	3.00 (76)	3.50 (89)	4.50 (114)	1.70 (43)	3.00 (76)	3.50 (89)	4.50 (114)	1.30 (33)
14.00 (355)	7/16, 1/2, 5/8	3.00 (76)	4.00 (102)	5.00 (127)	2.20 (56)	3.00 (76)	4.00 (102)	5.00 (102)	1.80 (46)

Note (1) This is an approximate average radius.

S8.7.2 *Preparation.* (a) Lay the hose material on a flat surface in an unstressed condition. Apply a permanent marking line along the centerline of the hose on the uppermost surface.

(b) Prepare the hose assembly with a free length as shown in the table accompanying Figure 5. The end fittings shall be attached according to the end fitting manufacturer's instructions.

(c) Plug the ends of the hose assembly and conduct the salt spray test in S6.11 using an air brake hose assembly. Remove the plugs from the end fittings.

(d) Within 168 hours of completion of the salt spray test, expose the hose assembly to an air temperature of 212 degrees Fahrenheit (100 degrees Celsius) for 70 hours, with the hose in a straight position. Remove the hose and cool it at room temperature for 2 hours. Within 166 hours, subject the hose to the flexure test in S8.7.2(e).

(e) Install the hose assembly on the flex testing machine as follows. With the movable hose attachment point at the mid point of its travel, attach one end of the hose to the movable attachment point with the marked line on the hose in the uppermost position. Attach the other end of the hose to the fixed attachment point allowing the hose to follow its natural curvature.

(f) Cycle the air pressure in the hose by increasing the pressure in the hose from zero psi to 150 psi and holding constant for one minute, then decreasing the pressure from 150 psi to zero psi and holding constant for one minute. Continue the pressure cycling for the duration of the flex testing. Begin the flex testing by cycling the movable attachment point through 6 inches of travel at a rate of 100 cycles per minute. Stop the flex testing and pressure cycling after one million flex cycles have been completed.

(g) Install an orifice with a hole diameter of 0.0625 inches and a thickness of 0.032 inches in the air pressure supply line to the hose assembly. Provide a gauge or other means to measure air pressure in the hose assembly. Regulate the supply air pressure to the orifice to 150 psi.

(h) Apply 150 psi air pressure to the orifice. After 2 minutes have elapsed, measure the air pressure in the brake hose assembly, while pressurized air

continues to be supplied through the orifice.

S8.8 *Corrosion resistance and burst strength test.* (a) Conduct the test specified in S6.11 using an air brake hose assembly. Remove the plugs from the ends of the hose assembly.

(b) Fill the hose assembly with water, allowing all gases to escape. Apply water pressure at a uniform rate of increase of approximately 1,000 psi per minute until the hose ruptures.

S8.9 *Tensile strength test.* Utilize a tension testing machine conforming to the requirements of American Society for Testing and Materials (ASTM) E4–03 ''Standard Practices for Force Verification of Testing Machines,'' and provided with a recording device to measure the force applied.

(a) Attach an air brake hose assembly to the testing machine to permit straight, even, machine pull on the hose. Use adapters to mount hose assemblies equipped with angled end fittings so that the hose is in a straight position when installed on the machine.

* * * * *

S8.13 *Adhesion test for air brake hose reinforced by wire.* (a) Place a steel ball with a diameter equal to 73 percent of the nominal inside diameter of the hose being tested inside of the hose. Plug one end of the hose. Attach the other end of the hose to a source of vacuum.

(b) Subject the hose to a vacuum of 25 inches of Hg for five minutes. With the vacuum still applied to the hose, bend the hose 180 degrees around a large test cylinder with a radius specified in Table IV for the size of hose tested. At the location of this bend, bend the hose 180 degrees around the test cylinder in the opposite direction.

(c) With the vacuum still applied to the hose, return the hose to a straight position. Attempt to roll the ball inside the hose using gravity from one end of the hose to the other end.

S8.14 *Constriction test.* Perform the constriction test in S6.12 using an air brake hose, except that the spherical diameter ''A'' of the plug gauge in Figure 4, or the diameter of the rigid spherical ball in S6.12.3(a), shall be 66 percent of the nominal inside diameter of the air brake hose being tested.

* * * * *

S9.2 *Test requirements.* Each vacuum brake hose assembly or appropriate part thereof shall be capable of meeting any of the requirements set forth under this heading, when tested under the conditions of S13 and the applicable procedures of S10. However, a particular hose assembly or appropriate part thereof need not meet further requirements after having met the constriction requirement (S9.2.1) and then having been subjected to any one of the requirements specified in S9.2.2 through S9.2.10.

S9.2.1 *Constriction.* Except for that part of an end fitting which does not contain hose, every inside diameter of any section of a vacuum brake hose assembly shall be not less than 75 percent of the nominal inside diameter of the hose if for heavy duty, or 70 percent of the nominal inside diameter of hose if for light duty (S10.10).

S9.2.2 *High temperature resistance.* A vacuum brake hose tested under the conditions specified in S10.1:

(a) Shall not have collapse of the outside diameter exceeding 10 percent of the initial outside diameter for a heavy-duty vacuum brake hose, or exceeding 15 percent of the initial outside diameter for a light-duty vacuum brake hose;

(b) Shall not show external cracks, charring, or disintegration visible without magnification, and;

(c) Shall not leak when subjected to a hydrostatic pressure test.

S9.2.3 *Low temperature resistance.* A vacuum brake hose tested under the conditions specified in S10.2 shall:

(a) Not show cracks visible without magnification after conditioning at minus 40 degrees Fahrenheit (minus 40 degrees Celsius) for 70 hours when bent around a cylinder having the radius specified in Table V for the size hose tested; and

(b) Not leak when subjected to a hydrostatic pressure test (S10.6).

* * * * *

S9.2.7 *Bend.* The collapse of the outside diameter of a vacuum brake hose, other than a preformed vacuum brake hose, at the middle point of the test length when bent until the ends touch shall not exceed the values given in Table V for the size of hose tested (S10.6).

S9.2.8 *Swell and adhesion.* Following exposure to Reference Fuel B, every inside diameter of any section of a vacuum brake hose shall not be less than 75 percent of the nominal inside diameter of the hose if for heavy duty, or 70 percent of the nominal inside diameter of the hose if for light duty. The vacuum brake hose shall show no leakage in a vacuum test of 26 inches of Hg for 10 minutes. A vacuum hose that is constructed of two or more layers shall withstand a force of 6 pounds per inch of length before separation of adjacent layers. (S10.7).

S9.2.9 *Deformation.* A vacuum brake hose shall return to 90 percent of its original outside diameter within 60 seconds after five applications of force as specified in S10.8, except that a wire-reinforced hose need only return to 85 percent of its original outside diameter. In the case of a heavy duty hose, the first application of force shall not exceed a peak value of 70 pounds, and the fifth application of force shall reach a peak value of at least 40 pounds. In the case of light duty hose the first application of force shall not exceed a peak value of 50 pounds, and the fifth application of force shall reach a peak value of at least 20 pounds (S10.9).

S9.2.10 *End fitting corrosion resistance.* After 24 hours of exposure to salt spray, vacuum brake hose end fittings shall show no base metal corrosion of the end fitting surface except where crimping or the application of labeling information has caused displacement of the protective coating. (S10.10).

* * * * *

S10. *Test procedures—Vacuum brake hose, brake hose assemblies, and brake hose end fittings.*

S10.1 *High temperature resistance test.* (a) Measure the initial outside diameter of the hose.

(b) Subject the hose to an internal vacuum of 26 inches of Hg at an ambient temperature of 257 degrees Fahrenheit (125 degrees Celsius) for a period of 96 hours. Remove the hose to room temperature and atmospheric pressure.

(c) Within 5 minutes of completion of the conditioning in S10.1(b), measure the outside diameter at the point of greatest collapse and calculate the percentage collapse based on the initial outside diameter.

(d) Cool the hose at room temperature for 5 hours. Bend the hose around a mandrel with a diameter equal to five times the initial outside diameter of the hose. Examine the exterior of the hose for cracks, charring, or disintegration visible without magnification. Remove the hose from the mandrel.

(e) Fill the hose assembly with water, allowing all gases to escape. Apply water pressure in the hose of 175 psi within 10 seconds. Maintain an internal hydrostatic pressure of 175 psi for one minute and examine the hose for visible leakage.

S10.2 *Low temperature resistance test.* (a) Conduct the test specified in S8.2(a) through (c) using vacuum brake hose with the cylinder radius specified in Table V for the size of hose tested.

(b) Remove the hose from the test cylinder, warm the hose at room temperature for 5 hours, and conduct the hydrostatic pressure test in S10.1(e).

* * * * *

S10.6 *Bend test.* (a) Bend a vacuum brake hose, of the length prescribed in Table V, in the direction of its normal curvature until the ends just touch as shown in Figure 6.

* * * * *

S10.7 *Swell and adhesion test.* (a) Fill a specimen of vacuum brake hose 12 inches long with ASTM Reference Fuel B as described in ASTM D471–98 ε[1] Standard Test Method for Rubber Property—Effect of Liquids. This incorporation by reference was approved by the Director of the Federal Register in accordance with 5 U.S.C. 552(a) and 1 CFR part 51. Copies may be obtained from the American Society for Testing and Materials (ASTM) International, 100 Barr Harbor Drive, P.O. Box C700, West Conshohocken, PA 19428–2959. Copies may be inspected at the National Highway Traffic Safety Administration, Technical Information Services, 400 Seventh St., SW., Plaza Level, Room 403, Washington, DC 20590, or at the National Archives and Records Administration (NARA). For information on the availability of this material at NARA, call 202–741–6030, or go to: *http://www.archives.gov/federal_register/code_of_federalregulations/ibr_locations.html.*

(b) Maintain reference fuel in the hose under atmospheric pressure at room temperature for 48 hours.

(c) Remove fuel and conduct the constriction test in S10.10.

(d) Attach the hose to a source of vacuum and subject it to a vacuum of 26 inches of Hg for 10 minutes. Remove the hose from the vacuum source.

(e) For a vacuum brake hose constructed of two or more layers, conduct the test specified in S8.6 using the vacuum brake hose.

S10.8 [Reserved]

* * * * *

S10.9.2 *Operation.*

* * * * *

(b) Apply gradually increasing force to the test specimen to compress its inside diameter to that specified in Table VI (dimension D of Figure 7) for the size of hose tested.

* * * * *

S10.10 *Constriction test.* Perform the constriction test in S6.12 using a vacuum brake hose, except that the spherical diameter ''A'' of the plug gauge in Figure 4, or the diameter of the rigid spherical ball in S6.12.3(a), shall be 75 percent of the nominal inside diameter of the vacuum brake hose if it is heavy duty, or 70 percent of the nominal inside diameter of the vacuum brake hose if it is light duty.

S11. *Requirements—Plastic air brake tubing, plastic air brake tubing assemblies, and plastic air brake tubing end fittings.*

11.1 *Construction.* Each plastic air brake tubing assembly shall be equipped with permanently attached end fittings or reusable end fittings. Plastic air brake tubing shall conform to the dimensional requirements specified in Table VII. (S12.1)

TABLE VII.—PLASTIC AIR BRAKE TUBING DIMENSIONS

Nominal tubing outside diameter	Maximum outside diameter		Minimum outside diameter		Nominal inside diameter		Nominal wall thickness		Wall thickness tolerance	
	mm	inches	mm	inches	mm	inches	mm	inches	mm	inches
1/8 inch	3.25	0.128	3.10	0.122	2.01	0.079	0.58	0.023	0.08	0.003
5/32 inch	4.04	0.159	3.89	0.153	2.34	0.092	0.81	0.032	0.08	0.003
3/16 inch	4.83	0.190	4.67	0.184	2.97	0.117	0.89	0.035	0.08	0.003
1/4 inch	6.43	0.253	6.27	0.247	4.32	0.170	1.02	0.040	0.08	0.003
5/16 inch	8.03	0.316	7.82	0.308	5.89	0.232	1.02	0.040	0.10	0.004
3/8 inch	9.63	0.379	9.42	0.371	6.38	0.251	1.57	0.062	0.10	0.004
1/2 inch	12.83	0.505	12.57	0.495	9.55	0.376	1.57	0.062	0.10	0.004
5/8 inch	16.00	0.630	15.75	0.620	11.20	0.441	2.34	0.092	0.13	0.005
3/4 inch	19.18	0.755	18.92	0.745	14.38	0.566	2.34	0.092	0.13	0.005
6 mm	6.10	0.240	5.90	0.232	4.00	0.157	1.00	0.039	0.10	0.004
8 mm	8.10	0.319	7.90	0.311	6.00	0.236	1.00	0.039	0.10	0.004
10 mm	10.13	0.399	9.87	0.389	7.00	0.276	1.50	0.059	0.10	0.004
12 mm	12.13	0.478	11.87	0.467	9.00	0.354	1.50	0.059	0.10	0.004
16 mm	16.13	0.635	15.87	0.625	12.00	0.472	2.00	0.079	0.13	0.005

S11.2 *Labeling.*

S11.2.1 *Plastic air brake tubing.* Plastic air brake tubing shall be labeled, or cut from bulk tubing that is labeled, at intervals of not more than 6 inches, measured from the end of one legend to the beginning of the next, in block capital letters and numerals at least one-eighth of an inch high, with the information listed in paragraphs (a) through (e) of this section. The information need not be present on tubing that is sold as part of a motor vehicle.

(a) The symbol DOT, constituting a certification by the hose manufacturer that the hose conforms to all applicable motor vehicle safety standards.

(b) A designation that identifies the manufacturer of the tubing, which shall be filed in writing with: Office of Vehicle Safety Compliance, Equipment Division NVS–222, National Highway Traffic Safety Administration, 400 Seventh St. SW., Washington, DC 20590. The designation may consist of block capital letters, numerals, or a symbol.

(c) The month, day, and year, or the month and year, of manufacture, expressed in numerals. For example, 10/1/96 means October 1, 1996.

(d) The nominal outside diameter expressed in inches or fractions of inches or in millimeters followed by the letters OD. The abbreviation ''mm'' shall follow tubing sizes that are expressed in millimeters. (Examples: 3/8 OD, 6 mm OD.)

(e) The letter ''A'' shall indicate intended use in air brake systems.

S11.2.2 *End fittings.* Except for an end fitting that is attached by deformation of the fitting about the tubing by crimping or swaging, at least one component of each plastic air brake tubing end fitting shall be etched, embossed, or stamped in block capital letters and numerals at least one-sixteenth of an inch high with the following information:

(a) The symbol DOT, constituting a certification by the manufacturer that the end fitting conforms to all applicable motor vehicle safety standards.

(b) A designation that identifies the manufacturer of the end fitting, which shall be filed in writing with: Office of

Vehicle Safety Compliance, Equipment Division NVS–222, National Highway Traffic Safety Administration, 400 Seventh St. SW., Washington, DC 20590. The designation may consist of block capital letters, numerals, or a symbol.

(c) The letter ''A'' shall indicate intended use in air brake systems.

(d) The nominal outside diameter of the plastic tubing to which the fitting is properly attached expressed in inches or fractions of inches or in millimeters followed by the letters OD. The abbreviation ''mm'' shall follow tubing sizes that are expressed in millimeters. (Examples: ⅜ OD, 6 mm OD)

S11.2.3. *Assemblies.* Each plastic air brake tubing assembly made with end fittings that are attached by crimping or swaging, except those sold as part of a motor vehicle, shall be labeled by means of a band around the brake tubing assembly as specified in this paragraph or, at the option of the manufacturer, by means of labeling as specified in S11.2.3.1. The band may at the manufacturer's option be attached so as to move freely along the length of the assembly, as long as it is retained by the end fittings. The band shall be etched, embossed, or stamped in block capital letters, numerals or symbols at least one-eighth of an inch high, with the following information:

(a) The symbol DOT, constituting certification by the tubing assembler that the tubing assembly conforms to all applicable motor vehicle safety standards.

(b) A designation that identifies the manufacturer of the hose assembly, which shall be filed in writing with: Office of Vehicle Safety Compliance, Equipment Division NVS–222, National Highway Traffic Safety Administration, 400 Seventh St. SW., Washington, DC 20590. The designation may consist of block capital letters, numerals, or a symbol.

S11.2.3.1 At least one end fitting of a plastic air brake tubing assembly made with end fittings that are attached by crimping or swaging shall be etched, stamped, or embossed with a designation at least one-sixteenth of an inch high that identifies the manufacturer of the tubing assembly and is filed in accordance with S11.2.3(b).

S11.3 *Test requirements.* Each plastic air brake tubing assembly or appropriate part thereof shall be capable of meeting any of the requirements set forth under this heading, when tested under the conditions of S13 and the applicable procedures of S12. However, a particular tubing assembly or appropriate part thereof need not meet further requirements after having met the constriction requirement (S11.3.1) and then having been subjected to any one of the requirements specified in S11.3.2 through S11.3.22. Unless otherwise specified, testing is conducted on a sample of tubing 12 inches in length.

S11.3.1 *Constriction.* Every inside diameter of any section of a plastic air brake tubing assembly shall not be less than 66 percent of the nominal inside diameter of the brake tubing. (S12.2)

S11.3.2 *High temperature conditioning and dimensional stability.* Plastic air brake tubing shall conform to the dimensions in Table VII after conditioning in air at 230 degrees Fahrenheit (110 degrees Celsius) for four hours. (S12.3)

S11.3.3 *Boiling water conditioning and dimensional stability.* Plastic air brake tubing shall conform to the dimensions in Table VII after conditioning in boiling water for two hours. (S12.4)

S11.3.4 *Burst Strength.* Plastic air brake tubing shall not rupture when subjected to the burst strength pressure in Table VIII for the size of tubing being tested. (S12.5)

S11.3.5 *Moisture absorption and burst strength.* Plastic air brake tubing shall not rupture when subjected to 80 percent of the burst strength pressure in Table VIII, after the tubing has been dried in an oven and then conditioned in a 100 percent relative humidity atmosphere at 75 degrees Fahrenheit (24 degrees Celsius) for 100 hours. (S12.6)

TABLE VIII.—PLASTIC AIR BRAKE TUBING MECHANICAL PROPERTIES

Nominal tubing OD	Burst strength pressure		Supported bend radius [1]		Unsupported bend radius [2]		Conditioned tensile load	
	kPa	Psi	Mm	inches	mm	inches	N	lbf
⅛ inch	6900	1000	9.4	0.37	9.4	0.37	156	35
5⁄32 inch	8300	1200	12.7	0.50	12.7	0.50	178	40
3⁄16 inch	8300	1200	19.1	0.75	19.1	0.75	222	50
¼ inch	8300	1200	25.4	1.00	25.4	1.00	222	50
5⁄16 inch	6900	1000	31.8	1.25	38.1	1.50	334	75
⅜ inch	9700	1400	38.1	1.50	38.1	1.50	667	150
½ inch	6600	950	50.8	2.00	63.5	2.50	890	200
⅝ inch	6200	900	63.5	2.50	76.2	3.00	1446	325
¾ inch	5500	800	76.2	3.00	88.9	3.50	1557	350
6 mm	7600	1100	20.0	0.75	25.4	1.00	222	50
8 mm	6200	900	31.8	1.25	38.1	1.50	334	75
10 mm	8200	1200	38.1	1.50	38.1	1.50	667	150
12 mm	6900	1000	44.5	1.75	63.5	2.50	890	200
16 mm	6000	875	69.9	2.75	76.2	3.00	1446	325

Notes: (1) Supported bend radius for tests specifying cylinders around which the tubing is bent. (2) Unsupported bend radius for the collapse resistance test in which the tubing is not supported by a cylinder during bending.

S11.3.6 *Ultraviolet light resistance.* Plastic air brake tubing shall not rupture when subjected to 80 percent of the burst strength pressure in Table VIII for the size of tubing being tested, after being exposed to ultraviolet light for 300 hours and then impacted with a one pound weight dropped from a height of 12 inches. (S12.7)

S11.3.7 *Low temperature flexibility.* The outer surface of plastic air brake tubing shall not show cracks visible without magnification as a result of conditioning in air at 230 degrees Fahrenheit (110 degrees Celsius) for 24 hours, and then conditioning in air at minus 40 degrees Fahrenheit (minus 40 degrees Celsius) for four hours, and then bending the tubing 180 degrees around a test cylinder having a radius equal to six times the nominal outside diameter of the tubing. (S12.8)

S11.3.8 *High temperature flexibility.* Plastic air brake tubing shall not rupture or burst when subjected to 80 percent of the burst strength pressure in Table VIII for the size of tubing being tested, after the tubing has been:

(a) Conditioned in air at 230 degrees Fahrenheit (110 degrees Celsius) for 72 hours while bent 180 degrees around a cylinder having a radius equal to the supported bend radius in Table VIII for the size of tubing being tested; and

(b) Cooled to room temperature while remaining on the cylinder, then straightened; and

(c) Bent 180 degrees around the cylinder in the opposite direction of the first bending. (S12.9)

S11.3.9 *High temperature resistance.* Plastic air brake tubing shall not rupture or burst when subjected to 80 percent of the burst strength pressure in Table VIII for the size of tubing being tested, after the tubing has been conditioned in air at 230 degrees Fahrenheit (110 degrees Celsius) for 72 hours. (S12.10)

S11.3.10 *High temperature conditioning, low temperature impact resistance.* Plastic air brake tubing shall not rupture or burst when subjected to 80 percent of the burst strength pressure in Table VIII for the size of tubing being tested, after the tubing has been conditioned in air at 230 degrees Fahrenheit (110 degrees Celsius) for 24 hours, then conditioned in air at minus 40 degrees Fahrenheit (minus 40 degrees Celsius) for 4 hours and impacted with a one pound weight dropped from a height of 12 inches. (S12.11)

S11.3.11 *Boiling water conditioning, low temperature impact resistance.* Plastic air brake tubing shall not rupture when subjected to 80 percent of the burst strength pressure in Table VIII for the size of tubing being tested, after the tubing has been conditioned in boiling water for two hours, then conditioned in air at minus 40 degrees Fahrenheit (minus 40 degrees Celsius) for 4 hours, and then impacted with a one pound weight dropped from a height of 12 inches. (S12.12)

S11.3.12 *Zinc chloride resistance.* The outer surface of plastic air brake tubing shall not show cracks visible under 7-power magnification after immersion in a 50 percent zinc chloride aqueous solution for 200 hours while bent around a cylinder having a radius equal to the supported bend radius in Table VIII for the size of tubing tested. (S12.13)

S11.3.13 *Methyl alcohol resistance.* The outer surface of plastic air brake tubing shall not show cracks visible under 7-power magnification after immersion in a 95 percent methyl alcohol aqueous solution for 200 hours while bent around a cylinder having a radius equal to the supported bend radius in Table VIII for the size of tubing tested. (S12.14)

S11.3.14 *High temperature conditioning and collapse resistance.* The collapse of the outside diameter of plastic air brake tubing shall not exceed twenty percent of the original outside diameter when bent 180 degrees on a holding fixture to the unsupported bend radius specified in Table VIII and conditioned in air at 200 degrees Fahrenheit (93 degrees Celsius) for 24 hours. (S12.15)

S11.3.15 *Ozone resistance.* The outer surface of plastic air brake tubing shall not show cracks visible under 7-power magnification after exposure to ozone for 70 hours at 104 degrees Fahrenheit (40 degrees Celsius). (S12.16)

S11.3.16 *Oil resistance.* Plastic air brake tubing shall not rupture when subjected to 80 percent of the burst strength pressure in Table VIII for the size of tubing being tested, after the tubing has been conditioned in ASTM IRM 903 oil at 212 degrees Fahrenheit (100 degrees Celsius) for 70 hours. (S12.17)

S11.3.17 *Tensile strength.* A plastic air brake tubing assembly designed for use between frame and axle or between a towed and a towing vehicle shall withstand, without separation of the tubing from its end fittings, a pull of 250 pounds if it is ⅜ inch, 10 mm, or less in nominal outside diameter, or a pull of 325 pounds if it is larger than ⅜ inch or 10 mm in nominal outside diameter. A plastic air brake tubing assembly designed for use in any other application shall withstand, without separation of the hose from its end fittings, a pull of 35 pounds if it is ⅛ inch, 3 mm, or less in nominal outside diameter, 40 pounds if it is 5⁄32 inch or 4 mm in nominal outside diameter, 50 pounds if it is 3⁄16 to ⅜ inch or 5 mm to 10 mm in nominal outside diameter, 150 pounds if it is ½ to ⅝ inch or 11 mm to 16 mm in nominal outside diameter, or 325 pounds if it is larger than ⅝ inch or 16 mm in nominal outside diameter. (S12.18)

S11.3.18 *Boiling water conditioning and tensile strength.* A plastic air brake tubing assembly when subjected to a tensile pull test shall either elongate 50 percent or withstand the conditioned tensile load in Table VIII without separation from its end fittings, with one end of the assembly conditioned in boiling water for 5 minutes. (S12.19)

S11.3.19 *Thermal conditioning and tensile strength.* A plastic air brake tubing assembly when subjected to a tensile pull test shall either elongate 50 percent or withstand the conditioned tensile load in Table VIII without separation from its end fittings after the assembly has been subjected to four cycles of conditioning in air at minus 40 degrees Fahrenheit (minus 40 degrees Celsius) for thirty minutes, normalizing at room temperature, conditioning in boiling water for 15 minutes, and normalizing at room temperature. (S12.20)

S11.3.20 *Vibration resistance.* A plastic air brake tubing assembly with an internal air pressure of 120 psig shall not rupture or leak more than 50 cm^3 per minute at a temperature of minus 40 degrees Fahrenheit (minus 40 degrees Celsius) and 25 cm^3 per minute at a temperature of 75 degrees Fahrenheit (24 degrees Celsius), after the assembly has been subjected to 1,000,000 cycles of vibration testing with one end of the assembly fixed and the other end stroked ½-inch at 600 cycles per minute. In addition, end fittings that use a threaded retention nut shall retain at least 20 percent of the original retention nut tightening torque upon completion of the vibration testing. The vibration test shall be conducted in an environmental chamber and the air temperature shall be cycled between minus 40 degrees Fahrenheit (minus 40 degrees Celsius) and 220 degrees Fahrenheit (104 degrees Celsius) during the test. (S12.21)

S11.3.21 *End fitting retention.* The end fittings of a plastic air brake tubing assembly shall not rupture when the assembly is filled with water and pressurized to the burst strength pressure in Table VIII. (S12.22)

S11.3.22 *Thermal conditioning and end fitting retention.* The end fittings of a plastic air brake tubing assembly shall not rupture when the tubing assembly is filled with ASTM IRM 903 oil and:

(a) Conditioning in air at 200 degrees Fahrenheit (93 degrees Celsius) for 24 hours with atmospheric pressure inside the tubing assembly; and

(b) Increasing the pressure inside the tubing assembly to 450 psi, and holding this pressure for five minutes while maintaining an air temperature of 200 degrees Fahrenheit (93 degrees Celsius); and

(c) Reducing the pressure inside the tubing assembly to atmospheric and permitting the tubing assembly to cool at 75 degrees Fahrenheit (24 degrees Celsius) for 1 hour; and

(d) Conditioning the tubing assembly in air at minus 40 degrees Fahrenheit (minus 40 degrees Celsius) for 24 hours with atmospheric pressure inside the tubing assembly; and

(e) Increasing the pressure inside the tubing assembly to 450 psi, and holding this pressure for five minutes while maintaining an air temperature of minus 40 degrees Fahrenheit (minus 40 degrees Celsius). (S12.23)

S11.3.23 *End fitting serviceability.* A plastic air brake end fitting that uses a threaded retention nut shall not rupture or leak more than 25 cm^3 per minute when pressurized to 120 psi after five assembly cycles. (S12.24)

S11.3.24 *End fitting corrosion resistance.* After 24 hours of exposure to salt spray, air brake hose end fittings shall show no base metal corrosion on the end fitting surface except where crimping or the application of labeling information causes a displacement of the protective coating. (S12.25)

S12. *Test procedures—Plastic air brake tubing, plastic air brake tubing assemblies, plastic air brake tubing end fittings.*

S12.1 *Air brake tubing dimensions.* Measure the tubing dimensions including wall thickness, inside diameter, and outside diameter, using appropriate metrology apparatus such as micrometers, dial indicators and gauges, or optical comparators. To account for slight out-of-round conditions, diameter measurements may be calculated using the average of the major and minor diameters.

S12.2 *Constriction test.* Perform the constriction test in S6.12 using an air brake tubing assembly, except that the spherical diameter ''A'' of the plug gauge in Figure 4, or the diameter of the rigid spherical ball in S6.12.3(a), shall be 66 percent of the nominal inside diameter of the tubing as specified in Table VII.

S12.3 *High temperature conditioning and dimensional stability test.* (a) Condition the tubing at 230 degrees Fahrenheit (110 degrees Celsius) for 4 hours in an air oven.

(b) Remove the tubing from the oven and allow to cool at room temperature for 30 minutes.

(c) Measure the dimensions of the tubing using the procedure in S12.1.

S12.4 *Boiling water conditioning and dimensional stability test.* (a) Utilize a container constructed of a non-reactive material large enough so that the tubing to be tested does not touch any surface of the container. Fill container with distilled water.

(b) Slip the tubing over a stainless steel wire for positioning it in the pot.

(c) Bring the water to a boil. Place the tubing in the water and position it so that it does not touch the container. Boil the tubing for two hours. Replenish the water as necessary, adding it slowly so that the water in the pot boils continuously.

(d) Remove the tubing from the water and allow to cool at room temperature for 30 minutes. Wipe off any water that remains on the tubing.

(e) Measure the dimensions of the tubing using the procedure in S12.1.

S12.5 *Burst strength test.* (a) Utilize an air brake tubing assembly or prepare a 12 inch length of tubing and install end fittings according to the end fitting manufacturer's instructions.

(b) Plug one end of the assembly, fill it with water, and connect the other end to a source of water pressure. Bleed any air from the assembly and water pressure system.

(c) Increase the water pressure inside the tubing assembly at a rate of 3,000 psi per minute to the burst strength pressure for the size of tubing being tested as specified in Table VIII.

S12.6 *Moisture absorption and burst strength.* (a) Prepare a sample of tubing twelve inches in length.

(b) Condition the tubing at 230 degrees Fahrenheit (110 degrees Celsius) for 24 hours in an air oven. Remove the tubing from the oven and within 30 seconds, and weigh it to establish the initial weight. The weight shall be measured with a resolution of 0.01 gram; if the scale has a higher resolution, then values of 0.005 gram and above shall be rounded to the nearest 0.01 gram and values below 0.005 gram shall be truncated.

(c) Place the tubing in an environmental chamber and condition it for 100 hours at 100 percent relative humidity and a temperature of 75 degrees Fahrenheit (24 degrees Celsius).

(d) Remove the tubing from the chamber and within a period of 5 minutes, remove all surface moisture from the tubing using cloth and weigh the tubing to establish the conditioned weight. Weight shall be measured to the nearest 0.01 gram as in S12.6(b).

(e) Calculate percentage of moisture absorption as follows:

([Conditioned Weight − Initial Weight])

[Initial Weight] × 100

(f) Install end fittings according to the end fitting manufacturers instructions.

(g) Conduct the burst strength test in 12.5 except use 80 percent of the burst strength pressure for the size of tubing being tested as specified in Table VIII.

S12.7 *Ultraviolet light resistance test.* (a) *Apparatus.* An accelerated weathering test machine for ultraviolet light conditioning of plastic air brake tubing. The machine shall be equipped with fluorescent UVA–340 light bulbs and automatic irradiance control. Also utilize an impact test apparatus as shown in Figure 8.

(b) *Test standards.* The testing is in accordance with American Society for Testing and Materials (ASTM) G154–00 ''Standard Practice for Operating Fluorescent Light Apparatus for UV Exposure of Nonmetallic Materials;'' ASTM G151–97 ''Standard Practice for Exposing Nonmetallic Materials in Accelerated Test Devices that Use Laboratory Light Sources,'' and; ASTM D4329–99 ''Standard Practice for Fluorescent UV Exposure of Plastics.'' These incorporations by reference were approved by the Director of the Federal Register in accordance with 5 U.S.C. 552(a) and 1 CFR Part 51. Copies may be obtained from the American Society for Testing and Materials (ASTM) International, 100 Barr Harbor Drive, P.O. Box C700, West Conshohocken, PA 19428–2959. Copies may be inspected at the National Highway Traffic Safety Administration, Technical Information Services, 400 Seventh St., SW., Plaza Level, Room 403, Washington, DC 20590, or at the National Archives and Records Administration (NARA). For information on the availability of this material at NARA, call (202) 741–6030, or go to: *http://www.archives.gov/federal_register/code_of_federal regulations/ibr_locations.html.*

(c) *Preparation.* (1) Utilize a 12 inch length of plastic air brake tubing. Mask 1 inch of each end of the tubing where end fittings will be attached using opaque tape.

(2) Attach the tubing to the test rack of the machine, securing it at the ends along the masked sections. Wipe the outside surface of the tubing with acetone to remove any surface contaminants. Place the tubing and rack in the accelerated weathering test machine so that the center of the tubing assembly is approximately in the center of the UV light exposure area of the test machine. (If multiple plastic brake tubing assemblies are tested, then their position in the machine should be rotated according to ASTM D4329–99 S7.4.1, except the rotation shall be each 96 hours instead of weekly.) The distance from the light bulb to the tubing shall be approximately 2 inches. Set the UV irradiance to 0.85 watts per square meter at 340 nm and maintain this level during the testing. Maintain a temperature inside the test chamber of 113 degrees Fahrenheit (45 degrees Celsius), and use only atmospheric humidity. Expose the tubing at this UV irradiance level for 300 hours continuously. Remove the tubing from the test chamber.

(3) Place the tubing inside the impact test apparatus, and drop the impacter onto the tubing from a height of 12 inches.

(4) Remove the masking material from the ends of the tubing. Install end fittings according to the end fitting manufacturer's instructions. Conduct the burst strength test in S12.5 except use 80 percent of the burst strength pressure for the size of tubing being tested as specified in Table VIII.

BILLING CODE 4910–59–P

FIGURE 8. IMPACT TEST APPARATUS

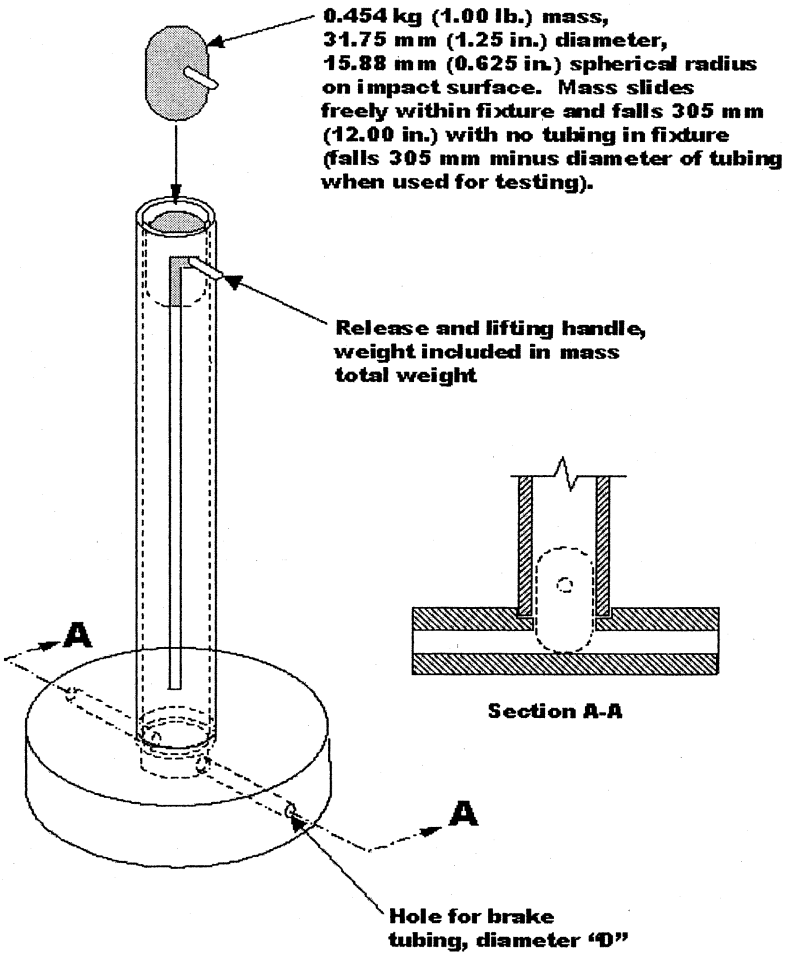

TABLE ACCOMPANYING FIGURE 8

Nominal tubing outside diameter	Hole diameter "D"	
	mm	Inches
1/8 inch	3.96	0.156
5/32 inch	4.75	0.187
3/16 inch	5.54	0.218
1/4 inch	7.14	0.281
5/16 inch	8.71	0.343
3/8 inch	10.31	0.406
1/2 inch	13.49	0.531
5/8 inch	16.66	0.656
3/4 inch	20.32	0.800
6 mm	6.80	0.268
8 mm	8.80	0.346
10 mm	10.80	0.425

TABLE ACCOMPANYING FIGURE 8—Continued

Nominal tubing outside diameter	Hole diameter "D"	
	mm	Inches
12 mm	12.80	0.504
16 mm	16.80	0.661

S12.8 *Low temperature flexibility test.* (a) Utilize a cylinder having a radius of six times the nominal outside diameter of the tubing.

(b) Condition the tubing in an air oven at 230 degrees Fahrenheit (110 degrees Celsius) for 24 hours. Remove from the oven and cool at room temperature for 30 minutes.

(c) Condition the cylinder and the tubing in an environmental chamber at minus 40 degrees Fahrenheit (minus 40 degrees Celsius) for four hours.

(d) With the tubing and test cylinder at minus 40 degrees Fahrenheit (minus 40 degrees Celsius), bend the tubing 180 degrees around the cylinder at a steady rate in a period of 4 to 8 seconds.

S12.9 *High temperature flexibility test.* (a) Utilize a cylinder having a radius equal to the supported bend radius in Table VIII for the size of tubing being tested.

(b) Bend the tubing 180 degrees around the cylinder and hold in place with a clamp or other suitable support, applying only enough force on the tubing to hold it in position.

(c) Condition the tubing and cylinder in an air oven at 230 degrees Fahrenheit (110 degrees Celsius) for 72 hours. Remove the tubing and cylinder from the oven and cool at room temperature for two hours.

(d) Remove the clamps or supports from the tubing and straighten the tubing at a steady rate in a period of 4 to 8 seconds.

(e) Rebend the tubing 180 degrees around the cylinder, at the same point but in the opposite direction of the bending in S12.9(b), at a steady rate in a period of 4 to 8 seconds.

(f) Conduct the burst strength test in S12.5 except use 80 percent of the burst strength pressure for the size of tubing being tested as specified in Table VIII.

S12.10 *High temperature resistance test.* Condition the tubing in an air oven at 230 degrees Fahrenheit for 72 hours. Remove the tubing and allow to cool at room temperature for 30 minutes. Conduct the burst strength test in S12.5 except use 80 percent of the burst strength pressure for the size of tubing being tested as specified in Table VIII.

S12.11 *High temperature conditioning, low temperature impact resistance test.* (a) *Apparatus.* Utilize an impact test apparatus as shown in Figure 8.

(b) Condition the tubing in an air oven at 230 degrees Fahrenheit (110 degrees Celsius) for 72 hours. Remove the tubing and allow to cool at room temperature for 30 minutes.

(c) Condition the tubing and the impact test apparatus in an environmental chamber at minus 40 degrees Fahrenheit (minus 40 degrees Celsius) for 4 hours.

(d) With the tubing and impact test apparatus at minus 40 degrees Fahrenheit (minus 40 degrees Celsius), place the tubing inside the apparatus and drop the impacter onto the tubing from a height of 12 inches. Remove the tubing from the chamber and allow to warm at room temperature for one hour.

(e) Conduct the burst strength test in S12.5 except use 80 percent of the burst strength pressure for the size of tubing being tested as specified in Table VIII.

S12.12 *Boiling water conditioning, low temperature impact resistance test.* (a) *Apparatus.* Utilize an impact test apparatus as shown in Figure 8.

(b) Condition the tubing in boiling water using the test in S12.4 (a) through (d), except that the length of tubing shall be 12 inches.

(c) Condition the tubing and the impact test apparatus in an environmental chamber at minus 40 degrees Fahrenheit (minus 40 degrees Celsius) for 4 hours.

(d) With the tubing and impact test apparatus at minus 40 degrees Fahrenheit (minus 40 degrees Celsius), place the tubing inside the apparatus and drop the impacter onto the tubing from a height of 12 inches. Remove the tubing from the chamber and allow to warm at room temperature for one hour.

(e) Conduct the burst strength test in S12.5 except use 80 percent of the burst strength pressure for the size of tubing being tested as specified in Table VIII.

S12.13 *Zinc chloride resistance test.* (a) Utilize a cylinder having a radius equal to the supported bend radius in Table VIII for the size of tubing being tested. The cylinder is constructed of a non-reactive material or coated to prevent chemical reaction with zinc chloride. The length of the tubing sample is long enough so that its ends will not be submerged during the immersion in zinc chloride, or the ends of the tubing are plugged to keep the zinc chloride from entering the tubing.

(b) Bend the tubing 180 degrees around the cylinder and hold in place with a clamp or other suitable support constructed of non-reactive materials, applying only enough force on the tubing to hold it in position.

(c) Immerse the tubing and cylinder in a 50 percent zinc chloride aqueous solution at room temperature for 200 hours.

(d) Remove the tubing and cylinder from the solution. While still on the test cylinder, inspect the tubing under 7-power magnification for cracks.

S12.14 *Methyl alcohol resistance.* (a) Utilize a cylinder having a radius equal to the supported bend radius in Table VIII for the size of tubing being tested. The cylinder is constructed of a non-reactive material or coated to prevent chemical reaction with methyl alcohol.

(b) Bend the tubing 180 degrees around the cylinder and hold in place with a clamp or other suitable support constructed of non-reactive materials, applying only enough force on the tubing to hold it in position. The ends of the tubing may be shortened so that they will be fully submerged in the methyl alcohol.

(c) Immerse the tubing and cylinder in a 95 percent methyl alcohol aqueous solution at room temperature for 200 hours.

(d) Remove the tubing and cylinder from the solution. While still on the test cylinder, inspect the tubing under 7-power magnification for cracks.

S12.15 *High temperature conditioning and collapse resistance test.* (a) *Apparatus.* A holding device consisting of two vertical pins affixed to a flat, horizontal plate. Each pin projects 1 inch above the top surface of the plate. The diameter of each pin is approximately equal to the inside diameter of the tubing being tested. Using the unsupported bend radius for the size of tubing being tested from Table VIII, the distance between the pin centerlines is equal to:

[2 × unsupported bend radius] + [nominal OD of tubing]

(b) *Preparation.* (1) Use the unsupported bend radius for the size of tubing being tested from Table VIII and cut the tubing to the following length:

[3.14 × [unsupported bend radius]] + [10 × [nominal tubing OD]] + 2 inches

or

[3.14 × [unsupported bend radius]] + [10 × [nominal tubing OD]] + 50 mm

(2) Place a reference mark at the center of the sample. At this mark, measure the initial outside diameter of the tubing. If the tubing is slightly out-of-round, use the elliptical minor diameter as the initial outside diameter.

(3) Install the tubing completely over the pins of the holding device so that the tubing is bent 180 degrees. If the tubing has a natural curvature, the tubing shall be bent in the direction of the natural curvature.

(4) Condition the holding device and tubing in an air oven at 230 degrees Fahrenheit (110 degrees Celsius) for 24 hours. Remove the holding device and tubing and allow to cool at room temperature for thirty minutes.

(5) With the tubing still mounted to the holding device, measure the elliptical minor diameter of the tubing at the reference mark to determine the final outside diameter.

(c) *Calculation.* Calculate the percentage collapse of the outside diameter of the tubing as follows:

([Initial Outside Diameter − Final Outside Diameter]) [Initial Outside Diameter] × 100

S12.16 *Ozone resistance test.* Conduct the test specified in S6.8 using plastic air brake tubing.

S12.17 *Oil resistance test.* (a) Utilize a plastic air brake tubing assembly or prepare a 12 inch length of tubing and install end fittings according to the end fitting manufacturer's instructions.

(b) Immerse the tubing assembly in ASTM 903 oil at 212 degrees Fahrenheit (100 degrees Celsius) for 70 hours. Remove and allow to cool at room temperature for 30 minutes. Wipe any excess oil from the tubing assembly.

(c) Conduct the burst strength test in S12.5 except use 80 percent of the burst strength pressure for the size of tubing being tested as specified in Table VIII and, at the manufacturer's option, oil may be used as the test medium instead of water.

S12.18 *Tensile strength test.* Conduct the test in S8.9 using a plastic air brake tubing assembly or an assembly prepared from a 12 inch length of air brake tubing with end fittings installed according to the end fitting manufacturer's instructions.

S12.19 *Boiling water conditioning and tensile strength.* (a) *Apparatus.* Use a tension testing machine as specified in S8.9. The lower attachment point of the machine is equipped with a heated, open-top container that is water tight. The inside of the container (lower attachment point) and upper attachment point of the machine have provisions to quickly attach a brake hose assembly for tensile testing.

(b) *Preparation.* Prepare an air brake tubing assembly with a free length of 6 inches (six inches of exposed tubing between the end fittings), with the end fittings installed in accordance with the end fitting manufacturer's instructions. If necessary install adapters on the end fittings to permit quick attachment to the machine, to keep water from entering the tubing assembly, and to ensure that the tubing assembly is in a straight position when installed on the machine. Fill the container with distilled water such that the lower 4 inches of exposed tubing will be submerged when the brake tubing assembly is installed on the machine. Heat the water until it boils. Then quickly install the plastic air brake tubing assembly on the machine with the lower end of the tubing assembly in the boiling water. After the water has boiled continuously for 5 minutes, apply tension to the tubing assembly at a rate of 1 inch per minute travel of the moving head until either the conditioned tensile load in Table VIII for the size of tubing being tested is reached or the free length of the tubing assembly reaches 9 inches, whichever occurs first.

S12.20 *Thermal conditioning and tensile strength.* (a) *Apparatus.* Use a tension testing machine as specified in S8.9.

(b) *Preparation.* Prepare an air brake tubing assembly with a free length of 6 inches (six inches of exposed tubing between the end fittings), with the end fittings installed in accordance with the end fitting manufacturer's instructions. If necessary install adapters on the end fittings to permit attachment to the machine, to keep water from entering the tubing assembly, and/or to ensure that the tubing assembly is in a straight position when installed on the machine. Subject the tubing assembly to four complete cycles of the following sequence:

(1) Condition the tubing assembly in an environmental chamber at minus 40 degrees Fahrenheit (minus 40 degrees Celsius) for 30 minutes. Remove from the chamber and allow to warm at room temperature for 30 minutes.

(2) Condition the tubing assembly by submerging it in boiling water for 15 minutes. Remove and allow to cool at room temperature for 30 minutes. Install the tubing assembly on the tension testing machine and apply tension to the tubing assembly at a rate of one inch per minute travel of the moving head until either the conditioned tensile load in Table VIII for the size of tubing being tested is reached or the free length of the tubing assembly reaches 9 inches, whichever occurs first.

S12.21 *Vibration resistance test.* (a) *Apparatus.* A vibration testing machine that supports a brake tubing assembly by its end fittings in approximately a straight line and includes the following features:

(1) One tubing assembly attachment point is fixed and the other moves in a plane perpendicular to a line projected between the attachment points. The movable attachment point moves in a linear direction and travels ½ inch total and at its midpoint of travel falls on a line projected between the attachment points. The movable attachment point has a cycle rate of 600 cycles per minute.

(2) The distance between the attachment points is adjustable to compensate for varying lengths of brake tubing assemblies.

(3) The actuating mechanism for the movable attachment point is balanced to prevent introduction of machine vibration into the brake tubing assembly.

(4) The machine has a compressed air supply system that pressurizes the air brake tubing assembly through one fitting while the other fitting is plugged. The machine's compressed air supply system includes a pressure gauge or monitoring system and an air flow meter.

(5) The machine is constructed so that an air brake tubing assembly mounted on it can be conditioned in an environmental test chamber.

(b) *Preparation.* (1) Prepare an air brake tubing assembly with a free length of 18 inches (18 inches of exposed tubing between the end fittings), with the end fittings installed in accordance with the end fitting manufacturer's instructions. Record the initial tightening torque for an end fitting that uses a threaded retaining nut.

(2) Install the air brake tubing assembly on the vibration testing machine and, with the movable attachment point at the midpoint of its travel, adjust the distance between the attachment points so that they are ½ inch closer together than the distance at which the tubing assembly is taut.

(3) With the tubing assembly inside the environmental chamber, apply compressed air to the tubing assembly at a regulated pressure of 120 psi and maintain the supply of air to the tubing assembly for the duration of the test. Set the temperature of the environmental chamber to 220 degrees Fahrenheit (104 degrees Celsius) and initiate cycling of the movable attachment point. After 250,000 cycles, set the temperature of the environmental chamber to minus 40 degrees Fahrenheit (minus 40 degrees Celsius). After 500,000 cycles, set the temperature of the environmental chamber to 220 degrees Fahrenheit (104 degrees Celsius). After 750,000 cycles, set the temperature of the environmental chamber to minus 40 degrees Fahrenheit (minus 40 degrees Celsius). Measure the air flow rate just prior to 1,000,000 cycles and if the compressed air flow rate supplied to the air brake tubing assembly exceeds 50 cubic centimeters per minute this constitutes failure of the test. Stop the cycling at 1,000,000 cycles and set the environmental chamber temperature to 75 degrees Fahrenheit (24 degrees Celsius), while air pressure is still supplied to the air brake tubing assembly. After one hour, measure the compressed air flow rate supplied to the air brake tubing assembly and if the rate exceeds 25 cubic centimeters per minute this constitutes failure of the test.

(4) For end fittings that use a threaded retaining nut, apply 20 percent of the original tightening torque as recorded in S12.21(b)(1). If the retention nut visibly moves, this constitutes a failure of the test.

S12.22 *End fitting retention test.* (a) Utilize an air brake tubing assembly or prepare a 12 inch length of tubing and install end fittings according to the end fitting manufacturer's instructions.

(b) Plug one end of the assembly, fill it with water, and connect the other end to a source of water pressure. Bleed any air from the assembly and water pressure system.

(c) Increase the pressure inside the tubing assembly at a rate of 3,000 psi per minute to 50 percent of the burst strength pressure for the size of tubing being tested as specified in Table VIII.

Hold the pressure constant for 30 seconds.

(d) Increase the pressure inside the tubing assembly at a rate of 3,000 psi per minute to the burst strength pressure for the size of tubing being tested as specified in Table VIII.

S12.23 *Thermal conditioning and end fitting retention test.* (a) *Apparatus.* A source of hydraulic pressure that includes a pressure gauge or monitoring system, uses ASTM IBM 903 oil, and is constructed so that an air brake tubing assembly mounted to it can be conditioned in an environmental test chamber.

(b) *Preparation.* Utilize an air brake tubing assembly or prepare a 12 inch length of tubing and install end fittings according to the end fitting manufacturer's instructions. Attach one end of the assembly to the hydraulic pressure supply and plug the other end of the assembly, fill the assembly with ASTM IRM 903 oil and bleed any air from the assembly, and place the tubing assembly inside an environmental chamber. Conduct the following tests:

(1) With atmospheric pressure applied to the oil inside the tubing assembly, set the environmental chamber temperature to 200 degrees Fahrenheit (93 degrees Celsius) and condition the tubing assembly for 24 hours.

(2) With the temperature maintained at 200 degrees Fahrenheit (93 degrees Celsius), increase the oil pressure inside the tubing assembly at a rate of 3,000 psi per minute to 450 psi, and hold this pressure for 5 minutes.

(3) Decrease the oil pressure inside the tubing assembly at a rate of 3,000 psi per minute to atmospheric pressure and set the temperature of the environmental chamber to 75 degrees Fahrenheit (24 degrees Celsius). Condition the tubing assembly at this temperature for 1 hour.

(4) Set the temperature of the environmental chamber to minus 40 degrees Fahrenheit (minus 40 degrees Celsius) and condition the tubing assembly for 24 hours.

(5) With the temperature maintained at minus 40 degrees Fahrenheit (minus 40 degrees Celsius), increase the hydraulic pressure inside the tubing assembly at a rate of 3,000 psi per minute to 450 psi, and hold this pressure for 5 minutes.

S12.24 *End fitting serviceability.* (a) *Apparatus.* A source of air pressure that includes a pressure gauge or monitoring system and is equipped with a mass air flow meter.

(b) *Preparation.* Prepare a 12-inch length of tubing and plug one end. Assemble the end fitting with the threaded retention nut on the other end of the tubing according to the end fitting manufacturer's instructions, then disassemble the fitting. Repeat the assembly and disassembly sequence three more times, and then reassemble the end fitting (five total assembly steps).

(c) Attach the end fitting with the threaded retention nut to the source of air pressure. Pressurize the tubing at a rate of 3,000 psi per minute to a pressure of 120 psi. If the end fitting leaks, measure and record the leakage rate using the mass air flow meter.

S12.25 *End fitting corrosion resistance.* Utilize an air brake tubing assembly or prepare a 12-inch length of tubing and install end fittings according to the end fitting manufacturer's instructions. Conduct the test specified in S6.11 using a plastic air brake tubing assembly.

S13. *Test Conditions.* Each hose assembly or appropriate part thereof shall be able to meet the requirements of S5, S7, S9, and S11, under the following conditions.

S13.1 The temperature of the testing room is 75 degrees Fahrenheit (24 degrees Celsius).

S13.2 The brake hoses and brake hose assemblies are at least 24 hours old, and unused.

S13.3 Specified test pressures are gauge pressures (psig).

Issued on: December 3, 2004.

Jeffrey W. Runge,

Administrator.

[FR Doc. 04–27088 Filed 12–17–04; 8:45 am]

BILLING CODE 4910–59–P

Federal Register

Monday,
December 20, 2004

Part V

Department of Defense
General Services Administration
National Aeronautics and Space Administration

48 CFR Chapter 1, et al.
Federal Acquisition Circular 2001–26; Introduction, Federal Acquisition Regulation; Electronic Representations and Certifications, et al.; Final Rules

DEPARTMENT OF DEFENSE

GENERAL SERVICES ADMINISTRATION

NATIONAL AERONAUTICS AND SPACE ADMINISTRATION

48 CFR Chapter 1

Federal Acquisition Circular 2001–26; Introduction

AGENCIES: Department of Defense (DoD), General Services Administration (GSA), and National Aeronautics and Space Administration (NASA).

ACTION: Summary presentation of final rules and a technical amendment.

SUMMARY: This document summarizes the Federal Acquisition Regulation (FAR) rules agreed to by the Civilian Agency Acquisition Council and the Defense Acquisition Regulations Council in this Federal Acquisition Circular (FAC) 2001–26. A companion document, the Small Entity Compliance Guide (SECG), follows this FAC. The FAC, including the SECG, is available via the Internet at *http://www.acqnet.gov/far*.

DATES: For effective dates and comment dates, see separate documents which follow.

FOR FURTHER INFORMATION CONTACT: The FAR Secretariat, at (202) 501–4755, for information pertaining to status or publication schedules. For clarification of content, contact the analyst whose name appears in the table below in relation to each FAR case or subject area. Please cite FAC 2001–26 and specific FAR case number(s). Interested parties may also visit our website at *http://www.acqnet.gov/far*.

Item	Subject	FAR case	Analyst
I	Electronic Representations and Certifications	2002–024	Zaffos.
II	Excluded Parties List System Enhancement	2002–023	Goral.
III	Special Emergency Procurement Authority	2003–022	Zaffos.
IV	Notification of Employee Rights Concerning Payment of Union Dues or Fees (Interim)	2004–010	Goral.
V	Mentor Protégé Program—Delegation of Approval Authority for Mentor Protégé Agreements	2003–010	Cundiff.
VI	Applicability of the Cost Principles and Penalties for Unallowable Costs	2001–018	Loeb.
VII	Technical Amendments.		

SUPPLEMENTARY INFORMATION: Summaries for each FAR rule follow. For the actual revisions and/or amendments to these FAR cases, refer to the specific item number and subject set forth in the documents following these item summaries.

FAC 2001–26 amends the FAR as specified below:

Item I—Electronic Representations and Certifications (FAR Case 2002–024)

This final rule requires offerors to provide representations and certifications electronically via the BPN website; to update the representations and certifications as necessary, but at least annually, to keep them current, accurate and complete; and to make changes that affect only one solicitation by completing the appropriate sections of either paragraph (j) of FAR provision 52.212–3 or FAR provision 52.204–8, whichever is included in the solicitation. This change represents a conversion of a paper-based process to a more efficient electronic process to obtain offerors' representations and certifications. It will also significantly reduce the paperwork burden for both offerors and contracting officers.

Item II—Excluded Parties List System Enhancement (FAR Case 2002–023)

This final rule amends the FAR to incorporate the Excluded Parties List System (EPLS), GSA's new searchable on-line electronic list of parties excluded from doing business with the Federal Government. The EPLS enables agencies to directly input data into this system and obviates the need for the hard copy List of Parties Excluded from Federal Procurement and Nonprocurement Programs. The EPLS will provide more up-to-date and readily accessible information to the contracting officer on parties excluded from doing business with the Federal Government.

Item III—Special Emergency Procurement Authority (FAR Case 2003–022)

This rule finalizes the interim rule 2003–022 by including under FAR subpart 13.5 the acquisition of supplies and services that meet the definition of a commercial item in FAR 2.101, and which, as determined by the head of the agency, are to be used to support a contingency operation. This final rule implements Section 1443 of the Services Acquisition Reform Act of 2003 (41 U.S.C. 428a) and also incorporates the higher thresholds authorized by Section 822 of the Ronald W. Reagan National Defense Authorization Act for Fiscal Year 2005. This rule allows the contracting officer expanded use of Simplified Acquisition and Commercial Items procedures when acquiring supplies or services that, as determined by the head of the agency, are to be used in support of a contingency operation or to facilitate the defense against or the recovery from nuclear, biological, chemical or radiological attack.

Item IV—Notification of Employee Rights Concerning Payment of Union Dues or Fees (FAR Case 2004–010) (Interim)

This interim rule amends FAR Parts 2, 22, and 52 to implement Executive Order (E.O.) 13201, Notification of Employee Rights Concerning Payment of Union Dues or Fees, and Department of Labor regulations at 29 CFR part 470. The rule requires Government contractors and subcontractors to post notices informing their employees that under Federal law they cannot be required to join a union or maintain membership in a union to retain their jobs. The required notice also advises employees who are not union members that they can object to the use of their union dues for certain purposes. This rule applies to Federal contractors and subcontractors with contracts or subcontracts that exceed the simplified acquisition threshold, unless covered by an exemption granted by the Secretary of Labor.

Item V—Mentor Protégé Program—Delegation of Approval Authority for Mentor Protégé Agreements (FAR Case 2003–010)

This final rule amends FAR 19.702, Statutory Requirements, to change the approval authority of the Mentor Protégé Agreements to the DoD Military Departments or Defense Agencies and to make some minor changes for clarification. This change is being made in order for DoD to streamline and

transform itself to more effectively achieve its mission.

Item VI—Applicability of the Cost Principles and Penalties for Unallowable Costs (FAR Case 2001–018)

This final rule increases the threshold at FAR 42.709(b) and FAR 42.709–6 from $500,000 to $550,000 for contracts subject to penalties if a contractor includes expressly unallowable costs in a claim for reimbursement. The threshold was increased to reflect inflation and is authorized by 10 U.S.C. 2324(l) and 41 U.S.C. 256(l).

The rule is of importance to contracting officers and contractors who negotiate contracts and modifications, and determine costs in accordance with FAR Part 31 contract cost principles.

Item VII—Technical Amendments

Editorial changes are made at FAR 11.201(d)(2)(i), 41.301(a), 44.203(b)(1), 51.102(c)(1), and in the introductory text of FAR provision 52.219–1 in order to update references.

Dated: December 9, 2004.

Laura Auletta,

Director, Contract Policy Division.

Federal Acquisition Circular

Federal Acquisition Circular (FAC) 2001-26 is issued under the authority of the Secretary of Defense, the Administrator of General Services, and the Administrator for the National Aeronautics and Space Administration.

Unless otherwise specified, all Federal Acquisition Regulation (FAR) and other directive material contained in FAC 2001-26 is effective December 20, 2004, except for Item I, which is effective January 1, 2005, and Items II, III, V, and VI, which are effective January 19, 2005.

Dated: December 6, 2004.

Deidre A. Lee,

Director, Defense Procurement and Acquisition Policy.

Dated: December 8, 2004.

David A. Drabkin,

Senior Procurement Executive, Office of the Chief Acquisition Officer, General Services Administration.

Dated: December 2, 2004.

Tom Luedtke,

Deputy Chief Acquisition Officer, National Aeronautics and Space Administration.

[FR Doc. 04–27632 Filed 12–17–04; 8:45 am]

BILLING CODE 6820–EP–S

DEPARTMENT OF DEFENSE

GENERAL SERVICES ADMINISTRATION

NATIONAL AERONAUTICS AND SPACE ADMINISTRATION

48 CFR Parts 2, 4, 14, 15, and 52

[FAC 2001–26; FAR Case 2002–024; Item I]

RIN 9000–AJ80

Federal Acquisition Regulation; Electronic Representations and Certifications

AGENCIES: Department of Defense (DoD), General Services Administration (GSA), and National Aeronautics and Space Administration (NASA).

ACTION: Final rule.

SUMMARY: The Civilian Agency Acquisition Council and the Defense Acquisition Regulations Council (Councils) have agreed on a final rule amending the Federal Acquisition Regulation (FAR) to require offerors to submit representations and certifications electronically via the Business Partner Network (BPN), unless certain exceptions apply.

DATES: *Effective Date:* January 1, 2005.

FOR FURTHER INFORMATION CONTACT: The FAR Secretariat at (202) 501–4755 for information pertaining to status or publication schedules. For clarification of content, contact Mr. Gerald Zaffos, Procurement Analyst, at (202) 501–6091. Please cite FAC 2001–26, FAR case 2002–024.

SUPPLEMENTARY INFORMATION:

A. Background

DoD, GSA, and NASA published a proposed rule in the **Federal Register** at 69 FR 4012, January 27, 2004. The 60–day comment period for the proposed rule ended March 29, 2004. Forty-five comments were received. Some of the comments merely agreed with the concept of ORCA; others pointed out typographical errors. The substantive comments are discussed below.

1. *Comment:* Should a contracting officer check for paper reps and certs and, failing to find them, check for electronic ones? Or, should a contracting officer only check for electronic ones if the offeror falls within a particular class of small business?

Council's response: The inclusion of the FAR provisions at 52.204–8 or 52.212–3(j) (as described in the final rule) in a solicitation would alert both the vendor and the contracting officer that the electronic completion of representations and certifications on the Online Representations and Certifications Application (ORCA) module is required for the specific contracting action.

2. *Comment:* Without reps and certs, how would a Contracting Officer know what class of small business an offeror is?

Council's response: ORCA includes the socio-economic representations and certifications (such as FAR 52.219–1, Small Business Program Representations.) A vendor would revise its responses in either FAR 52.204–8 or 52.212–3(j) (as described in the final rule) if its responses in ORCA is incorrect for the present solicitation.

3. *Comment:* The possibility of parallel paper and electronic systems offers myriad chances for error. What if paper and electronic versions differ? What if an offeror from the class of small businesses not required to build an electronic record chooses to build an electronic record? What if someone required to build an electronic record submits paper reps and certs instead?

Council's response: The provisions at FAR 52.204–8 and 52.212–3(j) make it clear that vendors are required to complete the representations and certifications in ORCA. Those certifications and representations would take precedence over any other representations and certifications received (for the same provisions included in ORCA) for the specific contract action unless the offeror indicates he is amending those answers in accordance with the referenced provisions.

4. *Comment:* Since contractors are currently using the CCR database, the EEO database, PRO-Net, and EPLS (consolidated under ''*BPN.com*''), will there be a future consideration for a contractor to have access and use the contractor's reps and certs rather than have the contractor continuing to request a new reps and certs package for the same sources that are on the ''BPN'' reps and certs database?

Council's response: Vendors will have access to ORCA. Please also note that the PRO-Net system has been retired, with its key capabilities being incorporated into CCR.

5. *Comment:* An additional clarification at FAR 12.301 is needed for oral solicitations. FAR 13.106–1(c) states the contracting officer shall solicit quotations orally to the maximum extent practicable. FAR 5.101(a)(2)(ii) exempts contracting officers from posting $10K-$25K requirements if oral solicitations are used. Otherwise, the requirement has to be posted for 10 days - a millennium in the customer's

eyes. In contrast, FAR 12.301(a)(2) says we have to use FAR 52.212–3, Offeror Representations and Certifications—Commercial Items, in all commercial solicitations. Recommend verbiage be added to stating, ''...other than oral...'' just before the first ''solicitation'' in FAR 12.301(b). It would then read, ''To implement this Act, the contracting officer shall insert the following provisions in other than oral solicitations for ....'' If this isn't the best place for it, then I would recommend similar verbiage in FAR 12.301(b)(2) to clear up this ambiguity.

Council's response: This comment will be separately considered by the Councils for appropriate action.

6. *Comment:* The requirement for a physical affirmation (check box) that the representations and certifications posted to BPN are current appears unnecessary. Respondent recommends the following language: ''The Offeror has completed the annual representations and certifications electronically via the Business Partner Network (BPN) web site at *http://orca.bpn.gov*, however, submits the following changes pertaining to this specific solicitation as identified below (insert changes, identifying change by clause number, title, and date). These amended representation(s) and/or certifications are also incorporated in this offer and are current, accurate, and complete as of the date of this proposal.'' This (a) addresses the true intent of the proposed language; (b) eliminates additional physical check boxes; and (c) reinforces the fact that the vendor is being held responsible for the currency of their online reps and certs information.

Council's response: We concur and have revised the applicable provisions accordingly.

7. *Comment:* Should FAR 52.222–38, Compliance with Veteran's Employment Reporting Requirements, be included in FAR 14.213(b)?

Council's response: We concur. The final rule and ORCA reflect the addition of this provision.

8. *Comment:* Can the electronic representations and certifications be incorporated with the Central Contractor Registration (CCR) file so as not to cause an additional burden on contractors already registered in the CCR?

Council's response: The ORCA portion of the BPN was built to supplement the data in CCR. Because CCR is now used for more than contracting purposes, we decided to not require additional representation and certification information from all CCR registrants, as it is only necessary for contracting offices. To alleviate the burden on the vendors, company information collected in CCR is electronically provided and pre-populated into ORCA. The vendor is not asked to re-enter any information that is found in CCR. The only information the vendor needs to supply in ORCA is directly related to representations and certifications.

9. *Comment:* Our contracts are for low dollar amounts and I cannot see the contractors doing all this preliminary work just for a small amount of business for them. All of this may work for higher dollar business. Can there be a dollar value attached?

Council's response: The provisions included in ORCA have applicability at different dollar values with the majority applying to items over the micro-purchase level. As such, ORCA must be applied to all acquisitions over the micro-purchase threshold. (However, in accordance with FAR 4.1102, micro-purchases can also be exempted from Central Contractor Registration (CCR) requirements.)

10. *Comment:* If vendors already access CCR, why is ORCA available only through the Business Partner Network? It seems it would be easier to include the necessary fields for ORCA into CCR so that vendors would not have to access two systems.

Council's response: ORCA is available through the BPN because it is part of the BPN, as is CCR. However, just like CCR, it can be reached directly via the URL *http://orca.bpn.gov*. To alleviate the burden on the vendor, company information collected in CCR is electronically provided and pre-populated into ORCA. The vendor is not asked to re-enter any information that is found in CCR.

11. *Comment:* Does a contractor first submit online reps and certs when he/she receives a solicitation and decides to submit an offer; or are the CCR database administrators going to notify its registrants and instruct them to go to the ''Online Representations and Certifications Application (ORCA)'' at bpn.gov and enter in the reps and certs?

Council's response: The first time the vendor responds to a solicitation that includes either FAR 52.204–8 or 52.212–3(j), the vendor would be required to complete the online representations and certifications. However, the Government plans an extended outreach effort, including notifications from CCR, in order to publicize ORCA's availability and required use.

12. *Comment:* Informational language in the proposed rule stated, ''Small businesses that are exempted from registering in the CCR database are also exempted from submitting representations and certifications electronically.'' This statement is confusing. We are not aware of any business class exceptions to CCR registration. The exception to CCR registration at FAR 4.1102 does not apply to the entity doing business with the Government insomuch as it applies to the type of acquisition or contract being awarded at the time. Even if a contractor was awarded a contract that happened to be exempt from the CCR requirement, the exception does not then apply for subsequent or new awards, if the new award does not meet one of the exceptions.

Council's response: We concur. The informational language has been corrected in the final rule.

13. *Comment:* We think that contractors may become frustrated or confused if, after completing reps and certs on line, they are then required to fill out reps and certs in another contract, just because that particular contract is exempt from the CCR requirements. Perhaps there should be direction to the CO to check ORCA before deciding which reps and certs clause to include in a solicitation for an award that may be exempt from CCR. If the contractor has already completed the annual reps and certs, then the annual reps and certs clause(s) could be used in the solicitation. If not, then the CO would include all applicable reps and certs required for the solicitation. However, since reps and certs are required for every award (except for micropurchases), there should be no exceptions for annual reps and certs. All solicitations should include the annual reps and certs clause. We believe that even contractors who may have had a contract exempted from CCR will eventually have to be registered in the CCR and therefore will be able to submit annual reps and certs.

Council's response: Concur. Final rule includes language to encourage ORCA use when CCR is not required and provides further instructions if the offeror has already completed representations and certifications in ORCA.

14.*Comment.* Perhaps the requirement for annual reps and certs should be moved from FAR Parts 12, 14, and 15 and moved to FAR Part 4, in a new Subpart, 4.12 (after 4.11, Central Contractor Registration). Alternatively, revise Subpart 4.11 to be a subpart titled Business Partner Network, with two sections. The scope of the subpart would prescribe policies and procedures for requiring contractor registration in the CCR database, and

submission of annual representations and certifications.

Council's response: We concur. The final rule adds a new Subpart 4.12 that addresses these requirements.

15. *Comment.* We have a concern about the submission process of the ''Online Representations and Certification Application (ORCA)''. In reading the ORCA procedures, we noted that contractors would be required to have a Marketing Partner Identification Number (MPIN) in order to enter information into ORCA. This is a number created by the vendor during the registration process in the CCR. We have a concern about this requirement. The MPIN is not a mandatory field in the CCR and it is likely that quite a few contractors did not create an MPIN at the time of CCR registration. It is possible that a lot of contractors will now have to go back to CCR and create an MPIN. We suggest allowing that the Trading Partner Identification Number (TPIN) issued by CCR be used instead, or change the MPIN field in CCR to a mandatory one. While this may be outside the scope of this case, this is something that should be looked into.

Council's response: The TPIN, for security reasons, is not provided to anyone (including other government systems) other than the Point of Contact provided by the registrant in its CCR record. The MPIN is required for vendors to use other Government systems (such as the Past Performance Information Retrieval System (PPIRS) and Federal Technical Data Solution (FedTeDS)), so its use for ORCA is consistent. However, it is true that currently the MPIN is an optional field in CCR. The suggestion to make it mandatory has been provided to the CCR Program Manager for consideration. Additionally, vendor outreach is planned for the implementation of ORCA, which will include instructions on the MPIN and its use.

16. *Comment:* Why is there no reference to annual representations and certifications in FAR Part 13 for use with non-commercial item acquisitions. We assume that either FAR 52.214–30 or 52.215–7 would be used. We recommend adding language similar to that at the proposed FAR 15.209(g) to FAR 13.302–5(d).

Council's response: Although FAR Part 13 does not specifically discuss representations and certifications, FAR 13.003(g)(1) states that any appropriate combination of procedures in FAR parts 13, 14, 15, 35, or 36 may be used for non-commercial items that do not exceed the simplified acquisition threshold. This would include using ORCA.

17. *Comment:* We recommend adding language similar to that at the proposed FAR 15.209(g) to FAR 14.201–9(e).

Council's response: By adding new Subpart 4.12, there is no need to add language to FAR 14.201–9(e).

18.*Comment:* FAR 52.222–18, Certification Regarding Knowledge of Child Labor for Listed End Products. This particular certification, which is listed as a certification that is not to be included in a solicitation that includes the annual reps and certs clause, doesn't seem appropriate as an annual certification because it contains contract specific fill-ins for the CO. This is only used for acquisition of certain products, which the CO must identify in the solicitation. How can this be an ''annual certification?''

Council's response: For the majority of vendors completing FAR 52.222–18, the answer would likely be the same: that they do not supply any end products from the identified countries. Vendors that have different answers in response to a specific solicitation would provide those differences in accordance with FAR 52.204–8 or 52.212–3(j) (whichever is included in the solicitation).

19. *Comment:* We think the language in the ''Annual Reps and Certs'' clauses should be revised to make it clear to offerors that any reps and certs posted on the BPN that do not apply or are different because of a particular solicitation must be identified. We are especially concerned that offerors understand that while they may be certified as a small business under one NAICS code, they may not be small under another one.

Council's response: We concur. The language included in the new Subpart 4.12 and in the provisions at FAR 52.204–8 and 52.212–3(j) makes it clear that offerors are required to indicate in the specific solicitation differences from the representations and certifications in ORCA.

20. *Comment:* When using ORCA, will contractors indicate their business size for the NAICS that they most commonly do business under and then be required to update the listing and business size when additional NAICS are used for particular situations? Or will they just indicate how many employees/dollars and then have the Government make assessments based on the particular NAICS that pertains to each solicitation?

Council's response: The vendor can provide up to 20 NAICS in CCR and consequently ORCA. Every NAICS the vendor provides to CCR is listed in ORCA. Size determination is automatically calculated (using annual revenue and number of employees) and displayed for each NAICS given. Additionally, the vendor-provided annual revenue and number of employees is shown. Contracting officers can use that information to calculate size status for NAICS not provided.

21. *Comment:* Vendors may be reluctant to publish TIN numbers because of concerns that it would be accessible to other parties.

Council's response: TIN numbers are never displayed in ORCA. The notice ''TIN on File with CCR'' is shown in place of the actual TIN.

22. *Comment:* An offeror's response to the Buy American Act certification would depend on the type of product being provided by the vendor.

Council's response: Vendors can list all of their foreign end products and the associated countries in ORCA. If in response to a solicitation a vendor offers a foreign end product not listed in ORCA, the vendor would provide the information in accordance with either provision FAR 52.204–8 or 52.212–3(j).

23. *Comment:* The proposed FAR 52.214–30 and 52.215–7 clauses are nearly identical (one referring to sealed bids and the other referring to negotiation and offerors). Consider combining the two proposed clauses into a single clause.

Council's response: Concur. The two provisions have been combined into new provision FAR 52.204–8.

24. *Comment:* Will the BPN Web site for the representations and certifications also accommodate agency-specific reps and certs, such as DFARS 252.247–7022?

Council's response: At this time ORCA only contains FAR level representations and certifications. Agency specific provisions are included in RFPs as required by Agency policies and regulations. However, this recommendation has been forwarded to the ORCA Program Manager for possible future inclusion in ORCA.

25. *Comment:* It would appear that Certificates of Current Cost and Pricing Data (when required – *i.e.*, non-competitive RFPs) would need to be included within RFPs, outside of their place within the Reps and Certs.

Council's response: We concur. The certification at FAR 15.406–2, Certificate of Current Cost or Pricing Data, is not included in ORCA.

26. *Comment:* Reps and Certs concerning Limited Rights Data/ Restricted Software would have to remain and RFP-specific requirement to

be called out by a contractor in some other portion of their proposal.

Council's response: ORCA allows the vendor to enter multiple Limited Rights Data and Restricted Computer Software into their record. A vendor that would have different answers in response to a specific solicitation would provide those differences in accordance with FAR 52.204–8 or 52.212–3(j) (whichever is included in the solicitation).

27. *Comment:* Information pertaining to Place of Performance would have to be RFP- specific and identified by contractors in another portion of their proposal.

Council's response: ORCA allows the vendor to enter multiple Places of Performance. A vendor that would have different answers in response to a specific solicitation would provide those differences in accordance with FAR 52.204–8 or 52.212–3(j) (whichever is included in the solicitation).

28. *Comment:* The identification of ''authorized negotiators,'' often included within Reps and Certs, is RFP-specific information for most contractors, and would have to be identified elsewhere in a contractor's proposal.

Council's response: ORCA does not provide for identification of authorized negotiators. This requirement is solicitation specific.

29. *Comment:* There are a number of issues regarding the handling of subcontractor Reps and Certs: (a) prime contractors could be given controlled access to the CCR database, to determine whether and what Reps and Certs have been completed by a subcontractor; (b) prime contractors could rely on a written affirmation/certification from subcontractors that they have completed the all-encompassing Reps and Certs; and (c) giving prime contractors access to the CCR database is probably the best solution, otherwise, there is a large amount of information that prime contractors would still have to get from subcontractors: business size, DUNS #, taxpayer ID #, whether they are debarred, or whether they are subject to the Cost Accounting Standards, for several examples.

Council's response: ORCA is available to the public to search and view. However, as previously stated, a vendor's TIN Number is never publicly displayed on ORCA.

30. *Comment:* Contractors must be required to update their BPN annual revenue size certifications whenever they complete a fiscal year, and must be required to update their BPN number of employees size certifications on a monthly basis in order for such certifications to be current, accurate, and complete. Otherwise the BPN reps and certs will be most likely be out–of–date, inaccurate, and incomplete, resulting in increased costs for both the procuring agency (increased number of size protests and related GAO protests) and offerors (costs associated with preparing offer for procurement where concern is ultimately found to be ineligible for award).

Council's response: In accordance with the provisions at FAR 52.204–8 and 52.212–3(j) (whichever is included in the solicitation), the vendor's offer constitutes affirmation that the information in ORCA is current, accurate, and complete as of the date of the offer. The offeror assumes the risk of out–of–date, inaccurate, or incomplete information by submission of his offer.

31. *Comment:* FAR 52.219–1 also contains reps and certs with respect to offers from HUBZone joint ventures, which are contract–specific reps and certs that cannot be submitted through the BPN (FAR 52.219–1(b)(6)(ii)). If the rule is adopted as proposed, the HUBZone joint venture reps and certs must be added to another FAR clause so that affected entities can make the required joint venture reps and certs with respect to particular contracts.

Council's response: We disagree. Vendors that would have different answers in response to a specific solicitation would provide those differences in accordance with FAR 52.204–8 or 52.212–3(j) (whichever is included in the solicitation).

32. *Comment:* Under the proposed rule, firms will not have to submit FAR 52.219–2, Equal Low Bids, on a contract-by-contract basis. However, under FAR 52.219–2, a concern must identify the labor surplus area (LSA) ''in which the costs to be incurred on account of manufacturing or production (by the bidder or first-tier subcontractors) amount to more than 50 percent of the contract price.'' Such a representation can only be made on a contract-by-contract basis. FAR clause 52.219–2 must be included in each particular contract. We recommend that proposed FAR 14.213(b)(9) be deleted.

Council's response: We disagree. For the majority of vendors completing FAR 52.219–2, the answer would likely be the same regardless of the solicitation. Vendors that have different answers in response to a specific solicitation would provide those differences in accordance with FAR 52.204–8 or 52.212–3(j), (whichever is included in the solicitation).

33. *Comment:* Under the proposed rule, firms will not have to submit FAR 52.219–22, Small Disadvantaged Business Status, on a contract-by-contract basis. However, this clause allows a firm that has not been certified as small disadvantaged business (SDB) to claim entitlement to SDB preferences while an application for SDB certification is pending (FAR 52.219–22(b)(1)(ii)). Procedures are currently in place for expediting SBA's review of an SDB application when an applicant is the apparent successful offeror (FAR 19.304(c)(2), 19.304(d); 13 CFR 124.1001(c)(2) and 124.1010). It is unclear if concerns can only represent themselves as SDBs in BPN if they have in fact already been certified as SDBs by SBA. If that is the case, then the provisions of FAR clause 52.219–22(b)(1)(ii) must be included in all solicitations so that firms can take advantage of the regulatory provisions which allow concerns to claim entitlement to SDB preferences while an SDB application is pending.

Council's response: We disagree. FAR 52.219–22(b)(1)(ii) is included in ORCA. A vendor can initially indicate that it has submitted a completed application to SBA and then update the representation if and when it is certified. A vendor can also indicate a change in status in either FAR 52.204–8 or 52.212–3(j), as appropriate.

Therefore, this final rule amends FAR parts 2, 4, 14, 15 and 52 to require offerors to—

- Provide representations and certifications electronically via the BPN Website at *http://orca.bpn.gov*;
- Update the representations and certifications as necessary, but at least annually to ensure they are kept current, accurate and complete; and
- Make changes that affect only one solicitation by completing the appropriate sections of either FAR 52.204–8 or 52.212–3(j); whichever is included in the solicitation.

This is not a significant regulatory action and, therefore, was not subject to review under Section 6(b) of Executive Order 12866, Regulatory Planning and Review, dated September 30, 1993. This rule is not a major rule under 5 U.S.C. 804.

B. Regulatory Flexibility Act

The Regulatory Flexibility Act, 5 U.S.C. 601, *et seq.*, applies to this final rule. The Councils prepared a Final Regulatory Flexibility Analysis (FRFA) as follows:

1. A succinct statement of the need for, and the objectives of, the rule.

The FAR requires small businesses to provide representations and certifications for individual solicitations. However, FAR 15.209(g) and FAR 14.213 do permit annual submissions if authorized by individual agencies. This rule establishes the requirement for annual submissions by electronic means.

In an effort to broaden use and reliance upon e-business applications, the Civilian Agency Acquisition Council and the Defense Acquisition Regulations Council are working with the Office of Federal Procurement Policy to eliminate the need to maintain paper-based sources of contractor information. The objective of this rule is to eliminate the need for offerors to submit the same information (*i.e.*, representations and certifications) to different Government contracting and payment offices. By the offerors providing this information to a centralized location, it is anticipated that this rule will have a significant positive impact on small businesses by reducing their overall administrative burden.

2. Legal basis for the rule.

There is no statutory basis for this rule but, rather, an e-Government Integrated Acquisition Environment's (IAE) initiative to re-use data as much as possible throughout the Federal procurement workspace (*i.e.*, ''submit once, use many'' times).

3. Description of, and, where feasible, estimate of the number of small entities to which the rule will apply.

The rule applies to small business offerors that also are required to register in the Central Contractor Registration (CCR) database. The reason for the link with CCR is that, as part of the online representations and certifications process, the software will use information that an offeror has already provided into the CCR database. The offeror will provide the additional information needed. Therefore, small businesses that are exempted from registering in the CCR database are also exempted from submitting representations and certifications electronically. The following CCR exceptions also apply to this rule:

(a) The purchase uses a Governmentwide commercial purchase card as the purchasing mechanism.

(b) Registration (see 4.401) in the CCR database, or use of CCR data, could compromise the safeguarding of classified information or national security.

(c) The contract is awarded by—

(1) A deployed contracting officer in the course of military operations, including, but not limited to, contingency operations as defined in 10 U.S.C. 101(a)(13) or humanitarian or peacekeeping operations as defined in 10 U.S.C. 2302(7); or

(2) A contracting officer in the conduct of emergency operations, such as responses to natural or environmental disasters or national or civil emergencies, *e.g.*, Robert T. Stafford Disaster Relief and Emergency Assistance Act (42 U.S.C. 5121).

(d) The contract is to support unusual or compelling needs.

(e) The award made is to a foreign vendor for work performed outside the United States, if it is impractical to obtain CCR registration before award.

Based on Governmentwide data, approximately, 20,825 small businesses were awarded contracts of $25,000 or more in fiscal year 2002. It is estimated that a majority of them will be subject to the rule. Many of these businesses are already among the over 240,000 registrants in CCR. Information is not available to identify the additional number of small businesses that were awarded contracts of less than $25,000, or were awarded basic agreements, basic ordering agreements, or blanket purchase agreements.

4. Description of projected reporting, recordkeeping, and other compliance requirements of the rule, including an estimate of the classes of small entities that will be subject to the requirement and the type of professional skills necessary for preparation of the report or record.

The Office of Management and Budget has already approved the current FAR information and recordkeeping requirement for obtaining representations and certifications under OMB Control Number 9000–0034. The rule decreases the collection requirements since the rule requires offerors to provide representations and certifications annually into a centralized database, in lieu of providing this information with each solicitation.

Administrative or financial personnel that have general knowledge of the contractor's business are able to register by providing the pertinent information into the Business Partner Network website.

5. Identification, to the extent practicable, of all relevant Federal rules that may duplicate, overlap or conflict with the rule.

The rule will not duplicate, overlap, or conflict with any other Federal rules.

6. Description of any significant alternatives to the final rule that accomplish the stated objectives of applicable statutes and that minimize any significant economic impact of the rule on small entities.

There are no significant practical alternatives that will accomplish the objective of this rule. Continued reliance on a paper-based system would unnecessarily promote inefficiency associated with paper-based processes. The successful phase-in of CCR by the Department of Defense demonstrates that the Federal contracting community, including small businesses, is successfully transitioning to greater use of electronic tools and their associated efficiencies to conduct business.

Interested parties may obtain a copy of the FRFA from the FAR Secretariat. The FAR Secretariat has submitted a copy of the FRFA to the Chief Counsel for Advocacy of the Small Business Administration.

C. Paperwork Reduction Act

The Paperwork Reduction Act (Pub. L. 104–13) applies because the final rule contains information collection requirements; however, these changes do not impose additional information collection requirements to the paperwork burdens previously approved under the Office of Management and Budget (OMB) Control Numbers 9000–0018, 9000–0024, 9000–0025, 9000–0047, 9000–0090, 9000–0094, 9000–0097, 9000–0130, 9000–0134, 9000–0139, 9000–0150, and 9000–0155, since the rule requires offerors to provide representations and certifications annually into a centralized database, in lieu of providing the same information with each solicitation.

List of Subjects in 48 CFR Parts 2, 4, 14, 15, and 52

Government procurement.

Dated: December 9, 2004.

Laura Auletta,

Director, Contract Policy Division.

■ Therefore, DoD, GSA, and NASA amend 48 CFR parts 2, 4, 14, 15, and 52 as set forth below:

■ 1. The authority citation for 48 CFR parts 2, 4, 14, 15, and 52 is revised to read as follows:

Authority: 40 U.S.C. 121(c); 10 U.S.C. chapter 137; and 42 U.S.C. 2473(c).

PART 2—DEFINITIONS OF WORDS AND TERMS

■ 2. Amend section 2.101 in paragraph (b)(2) by adding, in alphabetical order, the definitions ''Business Partner Network (BPN)'' and ''Online Representations and Certifications Application (ORCA)'' to read as follows:

2.101 Definitions.

* * * * *

(b) * * *

Business Partner Network (BPN) means an integrated electronic infrastructure the Government uses to manage (*i.e.*, collect, validate, access and maintain) the information it needs to transact business with its contractors. The BPN is located at *http://www.bpn.gov*.

* * * * *

Online Representations and Certifications Application (ORCA) means the primary Government repository for contractor submitted representations and certifications required for the conduct of business with the Government. ORCA is part of the Business Partner Network (BPN). ORCA is located at *http://orca.bpn.gov*.

* * * * *

PART 4—ADMINISTRATIVE MATTERS

4.1101 Definition.

■ 3. Amend section 4.1101 by revising the section heading to read as set forth above; and removing the definition ''Business Partner Network.''

■ 4. Add Subpart 4.12 to read as follows:

Subpart 4.12—Annual Representations and Certifications

Sec.

4.1200 Scope.
4.1201 Policy.
4.1202 Solicitation provision and contract clause.

4.1200 Scope.

This subpart prescribes policies and procedures for requiring prospective contractors to submit Annual

Representations and Certifications via the Online Representations and Certifications Application (ORCA), a part of the Business Partner Network (BPN), to—

(a) Eliminate the administrative burden for contractors of submitting the same information to various contracting offices; and

(b) Establish a common source for this information to procurement offices across the Government.

4.1201 Policy.

(a) Prospective contractors shall complete electronic annual representations and certifications at *http://orca.bpn.gov* in conjunction with required registration in the Central Contractor Registration (CCR) database (see FAR 4.1102).

(b) Prospective contractors shall update the representations and certifications submitted to ORCA as necessary, but at least annually, to ensure they are kept current, accurate, and complete. The representations and certifications are effective until one year from date of submission or update to ORCA.

4.1202 Solicitation provision and contract clause.

Except for commercial item solicitations issued under FAR Part 12, insert in solicitations the provision at 52.204–8, Annual Representations and Certifications. When the clause at 52.204–7, Central Contractor Registration, is included in the solicitation, do not include the following representations and certifications:

(a) 52.203–2, Certificate of Independent Price Determination.

(b) 52.203–11, Certification and Disclosure Regarding Payments to Influence Certain Federal Transactions.

(c) 52.204–3, Taxpayer Identification.

(d) 52.204–5, Women-Owned Business (Other Than Small Business).

(e) 52.209–5, Certification Regarding Debarment, Suspension, Proposed Debarment, and Other Responsibility Matters.

(f) 52.214–14, Place of Performance—Sealed Bidding.

(g) 52.215–6, Place of Performance.

(h) 52.219–1, Small Business Program Representations (Basic & Alternate I).

(i) 52.219–2, Equal Low Bids.

(j) 52.219–19, Small Business Concern Representation for the Small Business Competitiveness Demonstration Program.

(k) 52.219–21, Small Business Size Representation for Targeted Industry Categories Under the Small Business Competitiveness Demonstration Program.

(l) 52.219–22, Small Disadvantaged Business Status (Basic & Alternate I).

(m) 52.222–18, Certification Regarding Knowledge of Child Labor for Listed End Products.

(n) 52.222–22, Previous Contracts and Compliance Reports.

(o) 52.222–25, Affirmative Action Compliance.

(p) 52.222–38, Compliance with Veterans' Employment Reporting Requirements.

(q) 52.222–48, Exemption from Application of Service Contract Act Provisions for Contracts for Maintenance, Calibration, and/or Repair of Certain Information Technology, Scientific and Medical and/or Office and Business Equipment—Contractor Certification.

(r) 52.223–4, Recovered Material Certification.

(s) 52.223–9, Estimate of Percentage of Recovered Material Content for EPA-Designated Products (Alternate I only).

(t) 52.223–13, Certification of Toxic Chemical Release Reporting.

(u) 52.225–2, Buy American Act Certificate.

(v) 52.225–4, Buy American Act—Free Trade Agreements—Israeli Trade Act Certificate (Basic, Alternate I & II).

(w) 52.225–6, Trade Agreements Certificate.

(x) 52.226–2, Historically Black College or University and Minority Institution Representation.

(y) 52.227–6, Royalty Information (Basic & Alternate I).

(z) 52.227–15, Representation of Limited Rights Data and Restricted Computer Software.

PART 14—SEALED BIDDING

14.201–6 [Amended]

■ 5. Amend section 14.201–6 by removing and reserving paragraph (u).

14.213 [Removed]

■ 6. Remove section 14.213.

PART 15—CONTRACTING BY NEGOTIATION

15.209 [Amended]

■ 7. Amend section 15.209 by removing and reserving paragraph (g).

PART 52—SOLICITATION PROVISIONS AND CONTRACT CLAUSES

■ 8. Add section 52.204–8 to read as follows:

52.204–8 Annual Representations and Certifications.

As prescribed in 4.1202, insert the following provision:

ANNUAL REPRESENTATIONS AND CERTIFICATIONS (JAN 2005)

(a)(1) If the clause at 52.204–7, Central Contractor Registration, is included in this solicitation, paragraph (b) of this provision applies.

(2) If the clause at 52.204–7 is not included in this solicitation, and the offeror is currently registered in CCR, and has completed the ORCA electronically, the offeror may choose to use paragraph (b) of this provision instead of completing the corresponding individual representations and certifications in the solicitation. The offeror shall indicate which option applies by checking one of the following boxes:

[ ] (i) Paragraph (b) applies.

[ ] (ii) Paragraph (b) does not apply and the offeror has completed the individual representations and certifications in the solicitation.

(b) The offeror has completed the annual representations and certifications electronically via the Online Representations and Certifications Application (ORCA) website at *http://orca.bpn.gov*. After reviewing the ORCA database information, the offeror verifies by submission of the offer that the representations and certifications currently posted electronically have been entered or updated within the last 12 months, are current, accurate, complete, and applicable to this solicitation (including the business size standard applicable to the NAICS code referenced for this solicitation), as of the date of this offer and are incorporated in this offer by reference (see FAR 4.1201); except for the changes identified below [*offeror to insert changes, identifying change by clause number, title, date*]. These amended representation(s) and/or certification(s) are also incorporated in this offer and are current, accurate, and complete as of the date of this offer.

FAR Clause #	Title	Date	Change
_____	_____	_____	_____

Any changes provided by the offeror are applicable to this solicitation only, and do not result in an update to the representations and certifications posted on ORCA.

(End of Provision)

■ 9. Amend section 52.212–1 by revising the date of the provision and paragraph (b)(8) to read as follows:

52.212–1 Instructions to Offerors—Commercial Items.

* * * * *

INSTRUCTIONS TO OFFERORS—COMMERCIAL ITEMS (JAN 2005)

* * * * *

(b) *Submission of offers.* * * *

(8) A completed copy of the representations and certifications at FAR 52.212–3 (see FAR 52.212–3(j) for those representations and certifications that the offeror shall complete electronically);

* * * * *

■ 10. Amend section 52.212–3 by revising the date of the provision; adding an introductory paragraph and paragraph (j) to read as follows:

52.212–3 Offeror Representations and Certifications—Commercial Items.

* * * * *

OFFEROR REPRESENTATIONS AND CERTIFICATIONS—COMMERCIAL ITEMS (JAN 2005)

An offeror shall complete only paragraph (j) of this provision if the offeror has completed the annual representations and certifications electronically at *http://orca.bpn.gov*. If an offeror has not completed the annual representations and certifications electronically at the ORCA website, the offeror shall complete only paragraphs (b) through (i) of this provision.

* * * * *

(j)(1) *Annual Representations and Certifications.* Any changes provided by the offeror in paragraph (j) of this provision do not automatically change the representations and certifications posted on the Online Representations and Certifications Application (ORCA) website.

(2) The offeror has completed the annual representations and certifications electronically via the ORCA website at *http://orca.bpn.gov*. After reviewing the ORCA database information, the offeror verifies by submission of this offer that the representations and certifications currently posted electronically at FAR 52.212–3, Offeror Representations and Certifications—Commercial Items, have been entered or updated in the last 12 months, are current, accurate, complete, and applicable to this solicitation (including the business size standard applicable to the NAICS code referenced for this solicitation), as of the date of this offer and are incorporated in this offer by reference (see FAR 4.1201), except for paragraphs _____.

[*Offeror to identify the applicable paragraphs at (b) through (i) of this provision that the offeror has completed for the purposes of this solicitation only, if any.*

These amended representation(s) and/or certifica-tion(s) are also incorporated in this offer and are current, accurate, and complete as of the date of this offer.

Any changes provided by the offeror are applicable to this solicitation only, and do not result in an update to the representations and certifications posted on ORCA.]

(End of provision)

52.214–30 [Removed and Reserved]

■ 11. Remove and reserve section 52.214–30.

52.215–7 [Removed and Reserved]

■ 12. Remove and reserve section 52.215–7.

[FR Doc. 04–27633 Filed 12–17–04; 8:45 am]

BILLING CODE 6820–EP–S

DEPARTMENT OF DEFENSE

GENERAL SERVICES ADMINISTRATION

NATIONAL AERONAUTICS AND SPACE ADMINISTRATION

48 CFR Parts 2, 9, 22, 28, 44, and 52

[FAC 2001-26; FAR Case 2002-023; Item II]

RIN 9000-AJ78

Federal Acquisition Regulation; Excluded Parties List System Enhancement

AGENCY: Department of Defense (DoD), General Services Administration (GSA), and National Aeronautics and Space Administration (NASA).

ACTION: Final rule.

SUMMARY: The Civilian Agency Acquisition Council and the Defense Acquisition Regulations Council (Councils) have agreed on a final rule amending the Federal Acquisition Regulation (FAR) to publish an electronic list of parties excluded from doing business with the Federal Government online identified as the Excluded Parties List System (EPLS). This will obviate the need to publish the hard copy of the List of Parties Excluded from Federal Procurement and Nonprocurement Programs (List of Parties) produced by the Government Printing Office.

DATES: *Effective Date:* January 19, 2005.

FOR FURTHER INFORMATION CONTACT: The FAR Secretariat at (202) 501-4755 for information pertaining to status or publication schedules. For clarification of content, contact Mr. Craig Goral, Procurement Analyst, at (202) 501-3856. Please cite FAC 2001-26, FAR case 2002-023.

SUPPLEMENTARY INFORMATION:

A. Background

This final rule incorporates the Excluded Parties List System into the FAR and enables agencies to directly enter data on parties suspended, proposed for debarment, debarred, declared ineligible, or excluded or disqualified under the nonprocurement common rule by agencies or the Government Accountability Office. GSA maintains that direct entry by the acting agency will improve the reliability of the system, eliminate the need for a hard copy list, provide access to the archival data, and enhance the ability to verify entries by permitting a search by exact name and social security number where the agencies entering the data have the authority to collect, retain, and publish the party's social security number.

DoD, GSA, and NASA published a proposed rule in the *Federal Register* at 68 FR 67353, December 1, 2003. The Councils received comments in response to the proposed rule from six respondents. Several respondents concurred in the rule as written. Other comments are categorized as follows:

1. One respondent recommended that the names of the parties listed in the EPLS be linked to the Central Contractor Registry (CCR) accessible on the Internet at *http://www.ccr.gov/index.cfm*. The Councils partially concur; however, in light of impending review of the CCR and the Business Partner Network (BPN) by their Program Manager, within the next six months to ascertain the capabilities of these systems, no change was made at the present time.

2. One respondent pointed out a technological glitch in conducting searches using the EPLS search engine for a field for DUNS number that is not a required entry. He points out that if the searcher has a DUNS number and searches for that given DUNS number but the agency data entry person has not entered the number, the research results will indicate no such entry or ''No records were found matching this criteria.'' Searchers could readily interpret this search engine response as an indication that the party to which Dun and Bradstreet assigned a DUNS number is not listed in EPLS when what such search results could also mean is that there is no data actually entered into a non-mandatory field. He suggested adding a cautionary note to FAR 9.404 or 9.105-1(c)(1). The Councils acknowledge the validity of his concern but decline to add a cautionary note to the FAR. The Councils acknowledge that while obtaining a DUNS number is a

requirement in many areas within which one ''conducts business with the government,'' it is not yet a universal requirement. For instance, OMB has issued guidance for its use by grantees but the requirement does not extend to sub-recipients. The Councils also noted that his concern may be equally applicable to any field where entry is optional or not required. GSA has been requested to modify the automated response when a searcher searches on data possibly entered into an optional/not required field, so that the search engine response states words to the effect of ''No records were found matching this criteria; however, you have searched for data contained in a non-mandatory field. A negative response may only indicate that no data matching your search criterion has been entered in the field DUNS number field or SSN/TIN field. A search on other required fields is recommended.''

3. One respondent made five suggestions addressing broad policy changes in the suspension and debarment system. The respondent stated that the EPLS has not been adequately applied or uniformly enforced against large and small contractors and recommends five changes to improve the suspension and debarment system:

a. Create a centralized information database that should be consulted before awarding a contract or making a suspension and debarment system.

b. Require a contractor to disclose current suspensions or debarment, Federal or state litigation initiated against them in the past 3 years, and any Administrative Agreements the contractor is currently implementing.

c. Require an agency debarment official to use suspension and debarment actions equally against large and small contractors or to justify in writing a determination to do business with a nonresponsible contractor.

d. Amend the FAR to require mandatory suspension or debarment for a contractor that either had been criminally convicted or had a civil judgment entered against them for more than once in a three-year period.

e. Empower the Interagency Suspension and Debarment Committee (ISDC) to coordinate with the Federal agency taking a leadership role in a suspension or debarment case (especially with a repeat offender) and require the Interagency Committee to submit semi-annual reports to Congress regarding suspension and debarment decisions.

Because these comments lay outside the scope of the rule and addressed basic principles and policies leading to decisions to exclude parties rather than with the procedural changes in the operation of the electronic system, no change to the final rule is required. However, we will bring these comments to the attention of the ISDC.

4. One respondent had a list of comments regarding errors in citation and conflicts between definitions used in the FAR and the Nonprocurement Common Rule (NCR) published November 26, 2003 (68 FR 66553). The Councils acknowledge the definitions used in the NCR, but do not concur with the recommended changes to the proposed rule in the FAR. The FAR terminology, although not identical to the NCR terminology, is not entirely inconsistent. The FAR uses the specific terms ''suspension,'' ''debarment,'' or ''proposed for debarment'' which are also used in the NCR, but for which the NCR has provided an overall term of ''excluded,'' which the FAR does not use. The FAR uses the term ''ineligible'' (defined in FAR 2.101) rather than the comparable term ''disqualified'' used in the NCR, but the NCR also uses the term ''ineligible'' to cover both ''excluded'' and ''ineligible.'' Therefore, the actions described as ''ineligible'' in the FAR are also ''ineligible'' under the NCR, although the NCR uses the term more broadly. The term ''ineligible'' has been used for many years in the FAR, and is imbedded in the ''Procurement Cause and Treatment Codes'' and in agency supplements such as the Defense Federal Acquisition Regulation Supplement. The Councils consider that it would be unnecessarily disruptive to remove this term from the FAR. As stated in paragraph (b) of FAR 9.400, although FAR Subpart 9.4 covers the listing of ineligible contractors and the effect of this listing, it does not prescribe policies and procedures governing declarations of ineligibility. The main thing a contracting officer needs to know is the effect of being listed in the ''Excluded Parties List System,'' not the underlying basis for the listing, and whether the party is considered ''ineligible'' or ''disqualified.'' The contracting officer also needs to know the effect of being listed and may glean this from consultation with the cause and treatment codes. Accordingly, the final rule retains the current definition of ''ineligible'' in the FAR and deletes the NCR definitions of ''disqualified'' and ''excluded or exclusion'' which appeared in the proposed rule. However, the final rule adds ''or disqualified under the Nonprocurement Common Rule'' to paragraph (b)(1) of FAR 9.404. The respondent also noted that the proposed rule also used the definition ''covered transactions'' but no definition was provided and that the statutory citations to the listing of violating facilities in the Clean Water Act and Clean Air Act were erroneous in the definition of ''excluded or exclusion.'' Because the final rule deletes this definition, no change has been made, although the respondent was correct in noting the citations were wrong. Lastly, the respondent recommended that the word ''generally'' be added to paragraph (c)(5) of FAR 9.404 to occasions where 5 working days may be insufficient. The final rule includes the adverb but notes that posting the data beyond the five days provided should occur rarely.

This is not a significant regulatory action and, therefore, was not subject to review under Section 6(b) of Executive Order 12866, Regulatory Planning and Review, dated September 30, 1993. This rule is not a major rule under 5 U.S.C. 804.

B. Regulatory Flexibility Act

The Department of Defense, the General Services Administration, and the National Aeronautics and Space Administration certify that this final rule will not have a significant economic impact on a substantial number of small entities within the meaning of the Regulatory Flexibility Act, 5 U.S.C. 601, et seq., because the rule only makes changes in the way GSA manages and maintains the list of excluded parties. It does not change the criteria for inclusion on the list or the effect of the list on award or administration of contracts.

C. Paperwork Reduction Act

The Paperwork Reduction Act does not apply because the changes to the FAR do not impose information collection requirements that require the approval of the Office of Management and Budget under 44 U.S.C. 3501, et seq.

List of Subjects in 48 CFR Parts 2, 9, 28, 44, and 52

Government procurement.

Dated: December 9, 2004.

Laura Auletta,

Director, Contract Policy Division.

■ Therefore, DoD, GSA, and NASA amend 48 CFR parts 2, 9, 22, 28, 44, and 52 as set forth below:

■ 1. The authority citation for 48 CFR parts 2, 9, 22, 28, 44, and 52 is revised to read as follows:

Authority: Authority: 40 U.S.C. 121(c); 10 U.S.C. chapter 137; and 42 U.S.C. 2473(c).

PART 2—DEFINITIONS OF WORDS AND TERMS

■ 2. Amend section 2.101 in paragraph (b)(2) by adding, in alphabetical order, the definition ''Excluded Parties List System''; and removing the definition ''List of Parties Excluded from Federal Procurement and Nonprocurement Programs.'' The added definition reads as follows:

2.101 Definitions.

* * * * *

(b) * * *

E*xcluded Parties List System* means an electronic database maintained and posted by the General Services Administration containing the list of all parties suspended, proposed for debarment, debarred, declared ineligible, or excluded or disqualified under the nonprocurement common rule by agencies, Government corporations, or by the Government Accountability Office.

* * * * *

PART 9—CONTRACTOR QUALIFICATIONS

■ 3. Amend section 9.105-1 by revising paragraph (c)(1) to read as follows:

9.105-1 Obtaining information.

* * * * *

(c) * * *

(1) The Excluded Parties List System maintained in accordance with Subpart 9.4.

* * * * *

■ 4. Amend section 9.207 by revising paragraph (a)(9) to read as follows:

9.207 Changes in status regarding qualification requirements.

(a) * * *

(9) The source is on the Excluded Parties List System (see Subpart 9.4); or

* * * * *

■ 5. Revise section 9.404 to read as follows:

9.404 Excluded Parties List System.

(a) The General Services Administration (GSA)—

(1) Operates the web-based Excluded Parties List System (EPLS);

(2) Provides technical assistance to Federal agencies in the use of the EPLS; and

(3) Includes in the list the name and telephone number of the official responsible for its maintenance and distribution.

(b) The EPLS includes the—

(1) Names and addresses of all contractors debarred, suspended, proposed for debarment, declared ineligible, or excluded or disqualified under the nonprocurement common rule, with cross-references when more than one name is involved in a single action;

(2) Name of the agency or other authority taking the action;

(3) Cause for the action (see 9.406-2 and 9.407-2 for causes authorized under this subpart) or other statutory or regulatory authority;

(4) Effect of the action;

(5) Termination date for each listing;

(6) DUNS No.;

(7) Social Security Number (SSN), Employer Identification Number (EIN), or other Taxpayer Identification Number (TIN), if available; and

(8) Name and telephone number of the agency point of contact for the action.

(c) Each agency must—

(1) Obtain password(s) from GSA to access the EPLS for data entry;

(2) Notify GSA in the event a password needs to be rescinded (*e.g.,* when an agency employee leaves or changes function);

(3) Enter the information required by paragraph (b) of this section within 5 working days after the action becomes effective;

(4) Determine whether it is legally permitted to enter the SSN, EIN, or other TIN, under agency authority to suspend or debar;

(5) Update EPLS, generally within 5 working days after modifying or rescinding an action;

(6) In accordance with internal retention procedures, maintain records relating to each debarment, suspension, or proposed debarment taken by the agency;

(7) Establish procedures to ensure that the agency does not solicit offers from, award contracts to, or consent to subcontracts with contractors whose names are in the EPLS, except as otherwise provided in this subpart;

(8) Direct inquiries concerning listed contractors to the agency or other authority that took the action; and

(9) Contact GSA for technical assistance with the EPLS, via the support e-mail address or on the technical support phone line available at the EPLS web site provided in paragraph (d) of this section.

(d) The EPLS is available at *http://epls.gov*.

9.405 [Amended]

■ 6. Amend section 9.405 by—

a. Removing from paragraph (b) ''on the List of Parties Excluded from Federal Procurement and Nonprocurement Programs'' and adding ''in the EPLS'' in its place; and

b. Removing from paragraphs (d)(1) and (d)(4) ''List of Parties Excluded from Federal Procurement and Nonprocurement Programs'' and adding ''EPLS'' in their place.

9.405-2 [Amended]

■ 7. Amend section 9.405-2 by removing from paragraphs (b) introductory text, (b)(2), and (b)(3) ''on the List of Parties Excluded from Federal Procurement and Nonprocurement Programs'' and adding ''in the EPLS'' in their place.

PART 22—APPLICATIONS OF LABOR LAWS TO GOVERNMENT ACQUISITIONS

22.1025 [Amended]

■ 8. Amend the first sentence of section 22.1025 by removing ''List of Parties Excluded from Federal Procurement and Nonprocurement Programs'' and adding ''Excluded Parties List System'' in its place.

PART 28—BONDS AND INSURANCE

28.203-7 [Amended]

■ 9. Amend section 28.203-7 in paragraphs (c) and (d) by removing ''on the List of Parties Excluded from Federal Procurement and Nonprocurement Programs'' and adding ''in the Excluded Parties List System'' in their place.

PART 44—SUBCONTRACTING POLICIES AND PROCEDURES

44.202-2 [Amended]

■ 10. Amend section 44.202-2 in paragraph (a)(13) by removing ''on the List of Parties Excluded from Federal Procurement and Nonprocurement Programs'' and adding ''in the Excluded Parties List System'' in its place.

44.303 [Amended]

■ 11. Amend section 44.303 in paragraph (c) by removing ''List of Parties Excluded from Federal Procurement and Nonprocurement Programs'' and adding ''Excluded Parties List System'' in its place.

PART 52—SOLICITATION PROVISIONS AND CONTRACT CLAUSES

52.209-6 [Amended]

■ 12. Amend section 52.209-6 by revising the date of the clause to read ''(JAN 2005)'' removing from the introductory text of paragraph (c) ''List of Parties Excluded from Federal Procurement and Nonprocurement Programs'' and adding ''Excluded Parties List System'' in its place; and removing from paragraphs (c)(2) and (c)(3) ''on the List of Parties Excluded from Federal Procurement and Nonprocurement Programs'' and adding ''in the Excluded Parties List System'' in their place.

52.213-4 [Amended]

■ 13. Amend section 52.213-4 by revising the date of the clause to read ''(JAN 2005)''; and by removing from paragraph (b)(2)(i) of the clause ''(July 1995)'' and adding ''(JAN 2005)'' in its place.

[FR Doc. 04–27634 Filed 12–17–04; 8:45 am]

BILLING CODE 6820–EP–S

DEPARTMENT OF DEFENSE

GENERAL SERVICES ADMINISTRATION

NATIONAL AERONAUTICS AND SPACE ADMINISTRATION

48 CFR Parts 2, 12, 13, and 15

[FAC 2001–26; FAR Case 2003–022; Item III]

RIN 9000–AJ88

Federal Acquisition Regulation; Special Emergency Procurement Authority

AGENCIES: Department of Defense (DoD), General Services Administration (GSA), and National Aeronautics and Space Administration (NASA).

ACTION: Final rule.

SUMMARY: The Civilian Agency Acquisition Council and the Defense Acquisition Regulations Council (Councils) have agreed to convert the interim rule published in the **Federal Register** at 69 FR 8312, February 23, 2004, to a final rule with changes. The rule amends the Federal Acquisition Regulation (FAR) to implement the special emergency procurement authorities of Section 1443 of the Services Acquisition Reform Act of 2003 (Pub. L. 108–136, Title XIV, codified at 41 U.S.C. 428a), and section 822 of the Ronald W. Reagan National Defense Authorization Act for Fiscal Year 2005.

Section 1443 increases the amount of the micro-purchase threshold and the simplified acquisition threshold for procurements of supplies or services by or for an executive agency that, as determined by the head of the agency, are to be used in support of a contingency operation or to facilitate the defense against or the recovery from nuclear, biological, chemical or radiological attack. Section 822 of the Fiscal Year 2005 Defense Authorization Act further increased the threshold amounts for any contract to be awarded and performed, or purchases to be made, outside the United States.

Also, under section 1443, the head of the contracting activity carrying out a procurement of supplies or services to facilitate defense against or recovery from nuclear, biological, chemical, or radiological attack may treat such supplies or services as a commercial item.

DATES: Effective Date:January 19, 2005.

FOR FURTHER INFORMATION CONTACT: The FAR Secretariat at (202) 501–4755 for information pertaining to status or publication schedules. For clarification of content, contact Mr. Gerald Zaffos, Procurement Analyst, at (202) 208–6091. Please cite FAC 2001–26, FAR case 2003–022.

SUPPLEMENTARY INFORMATION:

A. Background

This final rule implements Section 1443 of the Services Acquisition Reform Act of 2003 (SARA) (41 U.S.C. 428a) and section 822 of the Ronald W. Reagan National Defense Authorization Act for Fiscal Year 2005. Section 1443 increases the amount of the micro-purchase threshold and the simplified acquisition threshold for procurements of supplies or services by or for an executive agency that, as determined by the head of the agency, are to be used in support of a contingency operation or to facilitate the defense against or the recovery from nuclear, biological, chemical or radiological attack. Section 1443 also authorizes the expanded use of Simplified Acquisition and Commercial Items procedures. Section 822 authorized a higher micro-purchase and simplified acquisition threshold for any contract to be awarded and performed, or purchases to be made, outside the United States, for the same purposes as authorized under section 1443 of SARA.

DoD, GSA, and NASA published an interim rule in the **Federal Register** at 69 FR 8312, February 23, 2004. The 60–day comment period for the interim rule ended April 23, 2004. Three comments were received; they are addressed below. Section 822 of the Fiscal Year 2005 Defense Authorization Act was enacted after publication of the interim rule. As a result, this final rule incorporates the increased thresholds provided by section 822.

One commenter recommended that the Councils seek a Governmentwide waiver from the Secretary of Labor from application of FAR clauses 52.222–26, Equal Opportunity, and 52.222–36, Affirmative Action for Workers With Disabilities, so that the purchase card could be used without having to also issue a purchase order with these clauses. The final rule does not adopt this suggestion because the FAR already authorizes the agency head to waive the inclusion of these clauses when deemed to be in the interest of national security (FAR 22.807(a)(1) and 22.1403(b), respectively).

The same commenter suggested that the final rule address the fact that the Service Contract Act requires clauses in all service contracts above $2,500. The final rule does not adopt this suggestion because neither SARA nor the Fiscal Year 2005 Defense Authorization Act suggested that these acquisitions are exempt from statutory requirements.

Another commenter questioned why the interim rule did not include contingency operations in the increased limitation on use of simplified acquisition procedures, as authorized by Section 1443. The final rule has been amended to include the procurement of commercial supplies and services in support of contingency operations in the increased limitation on use of simplified acquisition procedures. However, services and supplies procured in support of a contingency operation must meet the definition of a commercial item in FAR 2.101 for the increased limitation to apply.

This is not a significant regulatory action and, therefore, is not subject to review under Section 6(b) of Executive Order 12866, Regulatory Planning and Review, dated September 30, 1993. This rule is not a major rule under 5 U.S.C. 804.

B. Regulatory Flexibility Act

This final rule may have a significant economic impact on a substantial number of small entities within the meaning of the Regulatory Flexibility Act, 5 U.S.C. 601, *et seq.* However, the increased limitations are limited to procurements that are entered into in support of a contingency operation or to facilitate the defense against or the recovery from nuclear, biological, chemical or radiological attack. There are no data available on the number of procurements that will be eligible. We expect the increased thresholds to this limited class of procurements will apply to a very small number of small entities.

This final rule does not impose any data collection requirements on small business concerns. The rule does not duplicate, overlap, or conflict with other relevant Federal rules. There is no significant alternative to the final rule that would accomplish the stated beneficial objective.

The Councils prepared a Final Regulatory Flexibility Analysis (FRFA) as follows:

1. *Description of the reasons why action by the agency is being considered.* This final rule revises the Federal Acquisition Regulation (FAR) in order to implement

Section 1443 of the Services Acquisition Reform Act of 2003 (41 U.S.C. 428a) and section 822 of the Ronald W. Reagan National Defense Authorization Act for Fiscal Year 2005. Section 1443 increases the amount of the micro-purchase threshold and the simplified acquisition threshold for procurements of supplies and services to support a contingency operation or to facilitate defense against or recovery from nuclear, biological, chemical, or radiological attack. Section 822 increases the micro-purchase threshold and simplified acquisition threshold for any contract to be awarded and performed, or purchases to be made, outside the United States.

2. *Succinct statement of the objectives of, and legal basis for, the final rule.* This final rule implements Section 1443 of the Services Acquisition Reform Act of 2003 (41 U.S.C. 428a) and section 822 of the Ronald W. Reagan National Defense Authorization Act for Fiscal Year 2005.

3. *Description of, and, where feasible, estimate of the number of small entities to which the final rule will apply.* The increased thresholds are limited to procurements that are to support a contingency operation or to facilitate defense against or recovery from nuclear, biological, chemical, or radiological attack. There are no data available on the number of procurements that will be eligible. However, we expect the number of small entities that will be impacted by the increased thresholds to this limited class of procurements to be very small. In addition, although not required by the statute, the final rule raises the small business set-aside ceilings for purchases made under the authority of Section 1443 of the Services Acquisition Reform Act of 2003 (41 U.S.C. 428a). Section 822 of the Ronald W. Reagan National Defense Authorization Act for Fiscal Year 2005 is unlikely to affect small businesses in the United States as it applies outside the United States.

4. *Description of projected reporting, record keeping, and other compliance requirements of the final rule, including an estimate of the classes of small entities which will be subject to the requirement and the type of professional skills necessary for preparation of the report or record.* There are no reporting, record keeping, or other compliance requirements for this final rule.

5. *Identification, to the extent practicable, of all relevant Federal rules which may duplicate, overlap, or conflict with the final rule.* This rule does not duplicate, overlap, or conflict with other relevant Federal rules.

6. *Description of any significant alternatives to the final rule, which accomplish the stated objectives of applicable statutes and which minimize any significant economic impact of the final rule on small entities.* There are no significant alternatives to the final rule that would accomplish the stated objectives yet further reduce impact on small entities. The rule includes only FAR text revisions required to implement the statute.

The FAR Secretariat has submitted a copy of the Final Regulatory Flexibility Analysis to the Chief Counsel for Advocacy of the Small Business Administration. Interested parties may obtain a copy from the FAR Secretariat. The Councils will consider comments from small entities concerning the affected FAR subparts in accordance with 5 U.S.C. 610. Interested parties must submit such comments separately and should cite 5 U.S.C. 601, *et seq.* (FAC 2001–26, FAR case 2003–022) in correspondence.

C. Paperwork Reduction Act

The Paperwork Reduction Act does not apply because the changes to the FAR do not impose information collection requirements that require the approval of the Office of Management and Budget under 44 U.S.C. 3501, *et seq.*

List of Subjects in 48 CFR Parts 2, 12, 13, and 15

Government procurement.

Dated: December 9, 2004.

Laura Auletta,

Director, Contract Policy Division.

Interim Rule Adopted as Final With Changes

■ Accordingly, DoD, GSA, and NASA adopt the interim rule amending 48 CFR parts 2, 10, 12, 13, 15, 19, and 25 which was published in the **Federal Register** at 69 FR 8312, February 23, 2004, as a final rule with the following changes:

■ 1. The authority citation for 48 CFR parts 2, 12, 13, and 15 is revised to read as follows:

Authority: 40 U.S.C. 121(c); 10 U.S.C. chapter 137; and 42 U.S.C. 2473(c).

PART 2—DEFINITIONS OF WORDS AND TERMS

■ 2. Amend section 2.101 in paragraph (b)(2) by revising the definitions ''Micro-purchase threshold'' and ''Simplified acquisition threshold'' to read as follows:

2.101 Definitions.

* * * * *

(b) * * *

(2) * * *

Micro-purchase threshold means $2,500, except it means—

(1) For construction subject to the Davis-Bacon Act, $2,000; and

(2) For acquisitions of supplies or services that, as determined by the head of the agency, are to be used to support a contingency operation or to facilitate defense against or recovery from nuclear, biological, chemical, or radiological attack, as described in 13.201(g)(1), except for construction subject to the Davis-Bacon Act (41 U.S.C. 428a)—

(i) $15,000 in the case of any contract to be awarded and performed, or purchase to be made, inside the United States; and

(ii) $25,000 in the case of any contract to be awarded and performed, or purchase to be made, outside the United States.

* * * * *

Simplified acquisition threshold means $100,000, except for acquisitions of supplies or services that, as determined by the head of the agency, are to be used to support a contingency operation or to facilitate defense against or recovery from nuclear, biological, chemical, or radiological attack (41 U.S.C. 428a), the term means—

(1) $250,000 for any contract to be awarded and performed, or purchase to be made, inside the United States; and

(2) $1 million for any contract to be awarded and performed, or purchase to be made, outside the United States.

* * * * *

PART 12—ACQUISITION OF COMMERCIAL ITEMS

■ 3. Amend section 12.203 by revising the last sentence to read as follows:

12.203 Procedures for solicitation, evaluation, and award.

* * * For acquisitions of commercial items exceeding the simplified acquisition threshold but not exceeding $5 million ($10 million for acquisitions as described in 13.500(e)), including options, contracting activities shall employ the simplified procedures authorized by Subpart 13.5 to the maximum extent practicable.

PART 13—SIMPLIFIED ACQUISITION PROCEDURES

■ 4. Amend section 13.000 by revising the second sentence to read as follows:

13.000 Scope of part.

* * * Subpart 13.5 provides special authority for acquisitions of commercial items exceeding the simplified acquisition threshold but not exceeding $5 million ($10 million for acquisitions as described in 13.500(e)), including options. * * *

■ 5. Amend section 13.003 by revising paragraphs (c)(1)(ii) and (g)(2) to read as follows:

13.003 Policy.

* * * * *

(c)(1) * * *

(ii) $5 million ($10 million for acquisitions as described in 13.500(e)), including options, for acquisitions of commercial items using Subpart 13.5.

* * * * *

(g) * * *

(2) $5 million ($10 million for acquisitions as described in 13.500(e)),

for commercial items, use any appropriate combination of the procedures in Parts 12, 13, 14, and 15 (see paragraph (d) of this section).

* * * * *

■ 6. Amend section 13.201 by removing ''$15,000.'' from the end of paragraph (g)(1) and adding ''—'' in its place; and adding paragraphs (g)(1)(i) and (g)(1)(ii) to read as follows:

13.201 General.

* * * * *

(g)(1) * * *

(i) $15,000 in the case of any contract to be awarded and performed, or purchase to be made, inside the United States; and

(ii) $25,000 in the case of any contract to be awarded and performed, or purchase to be made, outside the United States.

* * * * *

■ 7. Amend section 13.303–5 by revising paragraph (b)(2) to read as follows:

13.303–5 Purchases under BPAs.

* * * * *

(b) * * *

(2) The limitation for individual purchases for commercial item acquisitions conducted under Subpart 13.5 is $5 million ($10 million for acquisitions as described in 13.500(e)).

* * * * *

■ 8. Amend section 13.500 by revising the first sentence of paragraph (a); and adding paragraph (e) to read as follows:

13.500 General.

(a) This subpart authorizes, as a test program, use of simplified procedures for the acquisition of supplies and services in amounts greater than the simplified acquisition threshold but not exceeding $5 million ($10 million for acquisitions as described in 13.500(e)), including options, if the contracting officer reasonably expects, based on the nature of the supplies or services sought, and on market research, that offers will include only commercial items. * * *

* * * * *

(e) Under 41 U.S.C. 428a, the simplified acquisition procedures authorized by this test program may be used for acquisitions that do not exceed $10 million when—

(1) The acquisition is for commercial items that, as determined by the head of the agency, are to be used in support of a contingency operation or to facilitate the defense against or recovery from nuclear, biological, chemical, or radiological attack; or

(2) The acquisition will be treated as an acquisition of commercial items in accordance with 12.102(f)(1).

■ 9. Amend section 13.501 by revising paragraph (a)(1)(ii) to read as follows:

13.501 Special documentation requirements.

(a) * * *

(1) * * *

(ii) Prepare sole source justifications using the format at 6.303–2, modified to reflect an acquisition under the authority of the test program for commercial items (section 4202 of the Clinger-Cohen Act of 1996) or the authority of the Services Acquisition Reform Act of 2003 (41 U.S.C. 428a).

* * * * *

PART 15—CONTRACTING BY NEGOTIATION

15.403–1 [Amended]

■ 10. Amend section 15.403–1 in paragraph (c)(3)(ii) by removing ''(Pub. L. 108–136, Sec. 1443)'' and adding ''(41 U.S.C. 428a)'' in its place.

[FR Doc. 04–27635 Filed 12–17–04; 8:45 am]

BILLING CODE 6820–EP–S

DEPARTMENT OF DEFENSE

GENERAL SERVICES ADMINISTRATION

NATIONAL AERONAUTICS AND SPACE ADMINISTRATION

48 CFR Parts 2, 22, and 52

[FAC 2001–26; FAR Case 2004–010; Item IV]

RIN 9000–AK04

Federal Acquisition Regulation; Notification of Employee Rights Concerning Payment of Union Dues or Fees

AGENCIES: Department of Defense (DoD), General Services Administration (GSA), and National Aeronautics and Space Administration (NASA).

ACTION: Interim rule with request for comments.

SUMMARY: The Civilian Agency Acquisition Council and the Defense Acquisition Regulations Council (Councils) have agreed on an interim rule amending the Federal Acquisition Regulation (FAR) to implement Executive Order 13201, Notification of Employee Rights Concerning Payment of Union Dues or Fees. The rule requires Government contractors and subcontractors to post notices, in all plants and offices, whether or not used in performing work that supports a Federal contract, informing their employees that under Federal law they cannot be required to join a union or maintain membership in a union to retain their jobs. The required notice also advises employees who are not union members that they can object to the use of their union dues for certain purposes.

DATES: *Effective Date*: December 20, 2004.

The Department of Labor's final rule implementing Executive Order 13201 was published on March 29, 2004, with an effective date of April 28, 2004. This rule amending the FAR is the formal notification to contracting officers to insert the Executive Order 13201 clause in covered solicitations issued on or after the effective date of this rule.

Comment Date: Interested parties should submit comments to the FAR Secretariat at the address shown below on or before February 18, 2005 to be considered in the formulation of a final rule.

ADDRESSES: Submit comments identified by FAC 2001–26, FAR case 2004–010, by any of the following methods:

- Federal eRulemaking Portal: *http://www.regulations.gov*. Follow the instructions for submitting comments.
- Agency Web Site: *http://www.acqnet.gov/far/ProposedRules/proposed.htm*. Click on the FAR case number to submit comments.
- E-mail: *farcase.2004–010@gsa.gov*. Include FAC 2001–26, FAR case 2004–010 in the subject line of the message.
- Fax: 202–501–4067.
- Mail: General Services Administration, Regulatory Secretariat (VIR), 1800 F Street, NW, Room 4035, ATTN: Laurie Duarte, Washington, DC 20405.

Instructions: Please submit comments only and cite FAC 2001–26, FAR case 2004–010, in all correspondence related to this case. All comments received will be posted without change to *http://www.acqnet.gov/far/ProposedRules/proposed.htm*, including any personal information provided.

FOR FURTHER INFORMATION CONTACT: The FAR Secretariat at (202) 501–4755 for information pertaining to status or publication schedules. For clarification of content, contact Mr. Craig Goral, Procurement Analyst, at (202) 501–3856. Please cite FAC 2001–26, FAR case 2004–010.

SUPPLEMENTARY INFORMATION:

A. Background

On April 13, 1992, President George H. W. Bush issued Executive Order (E.O.) 12800. E.O. 12800 required unionized Federal contractors to post a notice in the workplace that workers are

not required to join or support a union and threatened sanctions against contractors who did not comply. The next month, the Councils issued an interim rule implementing E.O. 12800 (57 FR 20373–20375, May 12, 1992).

However, E.O. 12800 was revoked on February 1, 1993, by President Clinton's E.O. 12836 (58 FR 7045, February 3, 1993). On March 2, 1993, the Councils issued a final rule (58 FR 12140) eliminating the interim rule.

On February 17, 2001, President George W. Bush issued E.O. 13201 (66 FR 11221, February 22, 2001). This Executive order revoked President Clinton's E.O. 12836 and reasserts the notification provisions and sanctions of E.O. 12800.

On October 1, 2001, the Department of Labor (DoL) published a proposed rule implementing E.O. 13201 (66 FR 50010). DoL finalized its implementing rule on March 29, 2004 (69 FR 16376).

E.O. 13201 is designed to promote economy and efficiency in Government procurement due to a better-informed American workforce. E.O. 13201 contains requirements similar, but not identical, to those in E.O. 12800.

The interim rule amends the FAR to—

- Provide a new FAR subpart on Notification of Employee Rights Concerning Payment of Union Dues or Fees;
- Add a clause at 52.222–39 to be included in every solicitation and contract, other than purchases that do not exceed the simplified acquisition threshold and contracts covered by an exemption granted by the Secretary of Labor. The new clause applies to contracts (commercial or non-commercial) and subcontracts (commercial or non-commercial) that exceed the simplified acquisition threshold;
- Amend the clause at 52.212–5, Contract Terms and Conditions Required to Implement Statutes or Executive Orders—Commercial Items, in order to include the new 52.222–39 clause; and
- Amend the clause at 52.244–6, Subcontracts for Commercial Items, in order to include the new 52.222–39 clause.

This is not a significant regulatory action and, therefore, was not subject to review under Section 6(b) of Executive Order 12866, Regulatory Planning and Review, dated September 30, 1993. This rule is not a major rule under 5 U.S.C. 804.

B. Regulatory Flexibility Act

The interim rule is not expected to have a significant economic impact on a substantial number of small entities within the meaning of the Regulatory Flexibility Act, 5 U.S.C. 601, *et seq.*, because the rule merely requires contractors to post notices and to insert a clause in subcontracts and purchase orders requiring subcontractors and vendors to post the notices also. The notices advise the contractors' and subcontractors' nonunion member employees of their rights under existing law concerning use of their union dues or fees where a union security agreement is in place. The rule provides sanctions for noncompliance, but full compliance with the Executive order and any related rules, regulations, and orders of the Secretary of Labor is expected of all contractors. Further, this interim rule is only implementing the DoL final rule. The Secretary of Labor has certified to the Chief Counsel for Advocacy at the Small Business Administration that the DoL final rule will not substantially change existing obligations for Federal contractors. Therefore, an Initial Regulatory Flexibility Analysis has not been performed. The Councils will consider comments from small entities concerning the affected FAR Parts 2, 22, and 52 in accordance with 5 U.S.C. 610. Interested parties must submit such comments separately and should cite 5 U.S.C 601, *et seq.* (FAC 2001–26, FAR case 2004–010), in correspondence.

C. Paperwork Reduction Act

The Paperwork Reduction Act (Pub. L. 104–13) applies because the interim rule contains information collection requirements; however, this rule's changes do not impose additional information collection requirements to the paperwork burden previously submitted to the Office of Management and Budget (OMB) and approved on November 15, 2004, under OMB Control Number 1215–0203. The DoL has identified the burdens associated with the filing and processing of complaints by complainants and contractors in the notice of final rulemaking at 69 FR 16376, March 29, 2004. The Councils believe that the package submitted by DoL meets the requirement imposed by the Paperwork Reduction Act and sufficiently covers this interim rule and no further action is necessary.

D. Determination to Issue an Interim Rule

A determination has been made under the authority of the Secretary of Defense (DoD), the Administrator of General Services (GSA), and the Administrator of the National Aeronautics and Space Administration (NASA) that urgent and compelling reasons exist to promulgate this interim rule without prior opportunity for public comment. This action is necessary to implement Executive Order 13201 and the DoL rule at 29 CFR part 470 effective April 28, 2004. However, pursuant to Public Law 98–577 and FAR 1.501, the Councils will consider public comments received in response to this interim rule in the formation of the final rule.

List of Subjects in 48 CFR Parts 2, 22, and 52

Government procurement.

Dated: December 9, 2004.

Laura Auletta,

Director, Contract Policy Division.

■ Therefore, DoD, GSA, and NASA amend 48 CFR parts 2, 22, and 52 as set forth below:

■ 1. The authority citation for 48 CFR parts 2, 22, and 52 is revised to read as follows:

Authority: 40 U.S.C. 121(c); 10 U.S.C. chapter 137; and 42 U.S.C. 2473(c).

PART 2—DEFINITIONS OF WORDS AND TERMS

■ 2. Amend section 2.101 in paragraph (b)(2) in the definition ''United States'' by redesignating paragraphs (4) and (5) as (5) and (6), respectively, and adding a new paragraph (4) to read as follows:

2.101 Definitions.

* * * * *

(b) * * *

United States, when used in a geographic sense, means the 50 States and the District of Columbia, except as follows:

* * * * *

(4) For use in Subpart 22.16, see the definition at 22.1601.

* * * * *

PART 22—APPLICATION OF LABOR LAWS TO GOVERNMENT ACQUISITIONS

■ 3. Add Subpart 22.16, consisting of sections 22.1600 through 22.1605, to read as follows:

Subpart 22.16–Notification of Employee Rights Concerning Payment of Union Dues or Fees

Sec.

22.1600 Scope of subpart.
22.1601 Definitions.
22.1602 Policy.
22.1603 Exemptions granted by the Secretary of Labor.
22.1604 Compliance investigations and sanctions for violations.
22.1605 Contract clause.

22.1600 Scope of subpart.

This subpart prescribes policies and procedures to implement Executive Order 13201, February 17, 2001.

22.1601 Definitions.

As used in this subpart—

Secretary means the Secretary of Labor, U.S. Department of Labor.

United States means the 50 States, the District of Columbia, Puerto Rico, the Northern Mariana Islands, American Samoa, Guam, the U.S. Virgin Islands, and Wake Island.

22.1602 Policy.

Executive Order 13201 generally requires contractors to post a notice informing employees of their rights concerning payment of union dues or fees and to include this requirement in subcontracts and purchases that exceed the simplified acquisition threshold.

22.1603 Exemptions granted by the Secretary of Labor.

(a) The Secretary may grant exemptions from the requirements of this subpart, including the requirement to include the clause at 52.222–39, or parts of that clause, in contracts. Requests for exemptions may be submitted in accordance with Department of Labor regulations at 29 CFR 470.3.

(b) The requirements of this subpart do not apply to contracts or subcontracts or purchases that do not exceed the simplified acquisition threshold.

22.1604 Compliance investigations and sanctions for violations.

The Secretary may investigate any contractor, subcontractor, or vendor to determine if any of the requirements of the clause at 52.222–39 have been violated. The procedures for conducting the investigations and effecting the sanctions are in 29 CFR part 470, Subpart B—Compliance Evaluations, Complaint Investigations and Enforcement Procedures. If the Secretary determines that there has been a violation, the Secretary may, to the extent authorized by 29 CFR 470.14 (which, in part, requires coordination between the head of the agency and the Secretary), direct that the contract be cancelled, terminated, or suspended in whole or in part. The Secretary may also declare the contractor ineligible for further Government contracts. Each contracting agency shall cooperate with the Secretary and provide such information and assistance as the Secretary may require in the performance of the Secretary's functions.

22.1605 Contract clause.

Insert the clause at 52.222–39, Notification of Employee Rights Concerning Payment of Union Dues or Fees, in all solicitations and contracts, except—

(a) Acquisitions that do not exceed the simplified acquisition threshold. For indefinite quantity contracts, include the clause only if the value of orders in any calendar year of the contract is expected to exceed the simplified acquisition threshold; or

(b) Contracts covered by an exemption granted by the Secretary of Labor. A contracting agency may modify the clause at 52.222–39, if necessary, to reflect an exemption granted by the Secretary (see 22.1603(a)).

PART 52—SOLICITATION PROVISONS AND CONTRACT CLAUSES

■ 4. Amend section 52.212–5 by—

■ a. Revising the date of the clause;

■ b. Redesignating paragraphs (b)(21) through (b)(34) as (b)(22) through (b)(35), respectively, and adding a new paragraph (b)(21);

■ c. In the introductory text of paragraph (e)(1), by removing ''paragraphs (i) through (vi)'' and adding ''paragraphs (i) through (vii)'' in its place; and redesignating paragraphs (e)(1)(v) and (e)(1)(vi) as (e)(1)(vi) and (e)(1)(vii), respectively, and adding a new paragraph (e)(1)(v) to read as follows:

52.212–5 Contract Terms and Conditions Required to Implement Statutes or Executive Orders—Commercial Items.

* * * * *

CONTRACT TERMS AND CONDITIONS REQUIRED TO IMPLEMENT STATUTES OR EXECUTIVE ORDERS—COMMERCIAL ITEMS (DEC 2004))

* * * * *

(b) * * *

____(21) 52.222–39, Notification of Employee Rights Concerning Payment of Union Dues or Fees (DEC 2004) (E.O. 13201).

* * * * *

(e)(1) * * *

(v) 52.222–39, Notification of Employee Rights Concerning Payment of Union Dues or Fees (DEC 2004) (E.O. 13201).

* * * * *

52.213–4 [Amended]

■ 5. Amend section 52.213–4 by removing from the clause heading ''(Oct 2004)'' and adding ''(DEC 2004)'' in its place; and removing ''(July 2004)'' from paragraph (a)(2)(vi) of the clause and adding ''(DEC 2004) '' in its place.

■ 6. Add section 52.222–39 to read as follows:

52.222–39 Notification of Employee Rights Concerning Payment of Union Dues or Fees.

As prescribed in 22.1605, insert the following clause:

NOTIFICATION OF EMPLOYEE RIGHTS CONCERNING PAYMENT OF UNION DUES OR FEES (DEC 2004)

(a) *Definition.* As used in this clause—

United States means the 50 States, the District of Columbia, Puerto Rico, the Northern Mariana Islands, American Samoa, Guam, the U.S. Virgin Islands, and Wake Island.

(b) Except as provided in paragraph (e) of this clause, during the term of this contract, the Contractor shall post a notice, in the form of a poster, informing employees of their rights concerning union membership and payment of union dues and fees, in conspicuous places in and about all its plants and offices, including all places where notices to employees are customarily posted. The notice shall include the following information (except that the information pertaining to National Labor Relations Board shall not be included in notices posted in the plants or offices of carriers subject to the Railway Labor Act, as amended (45 U.S.C. 151–188)).

Notice to Employees

Under Federal law, employees cannot be required to join a union or maintain membership in a union in order to retain their jobs. Under certain conditions, the law permits a union and an employer to enter into a union-security agreement requiring employees to pay uniform periodic dues and initiation fees. However, employees who are not union members can object to the use of their payments for certain purposes and can only be required to pay their share of union costs relating to collective bargaining, contract administration, and grievance adjustment.

If you do not want to pay that portion of dues or fees used to support activities not related to collective bargaining, contract administration, or grievance adjustment, you are entitled to an appropriate reduction in your payment. If you believe that you have been required to pay dues or fees used in part to support activities not related to collective bargaining, contract administration, or grievance adjustment, you may be entitled to a refund and to an appropriate reduction in future payments.

For further information concerning your rights, you may wish to contact the National Labor Relations Board (NLRB) either at one of its Regional offices or at the following address or toll free number:

National Labor Relations Board
Division of Information
1099 14th Street, N.W.
Washington, DC 20570
1–866–667–6572
1–866–316–6572 (TTY)

To locate the nearest NLRB office, see NLRB's website at *http://www.nlrb.gov*.

(c) The Contractor shall comply with all provisions of Executive Order 13201 of February 17, 2001, and related implementing regulations at 29 CFR part 470, and orders of the Secretary of Labor.

(d) In the event that the Contractor does not comply with any of the requirements set forth in paragraphs (b), (c), or (g), the Secretary may direct that this contract be cancelled, terminated, or suspended in whole or in part, and declare the Contractor ineligible for further Government contracts in accordance with procedures at 29 CFR part 470, Subpart B—Compliance Evaluations, Complaint Investigations and Enforcement Procedures. Such other sanctions or remedies may be imposed as are provided by 29 CFR part 470, which implements Executive Order 13201, or as are otherwise provided by law.

(e) The requirement to post the employee notice in paragraph (b) does not apply to—

(1) Contractors and subcontractors that employ fewer than 15 persons;

(2) Contractor establishments or construction work sites where no union has been formally recognized by the Contractor or certified as the exclusive bargaining representative of the Contractor's employees;

(3) Contractor establishments or construction work sites located in a jurisdiction named in the definition of the United States in which the law of that jurisdiction forbids enforcement of union-security agreements;

(4) Contractor facilities where upon the written request of the Contractor, the Department of Labor Deputy Assistant Secretary for Labor-Management Programs has waived the posting requirements with respect to any of the Contractor's facilities if the Deputy Assistant Secretary finds that the Contractor has demonstrated that—

(i) The facility is in all respects separate and distinct from activities of the Contractor related to the performance of a contract; and

(ii) Such a waiver will not interfere with or impede the effectuation of the Executive order; or

(5) Work outside the United States that does not involve the recruitment or employment of workers within the United States.

(f) The Department of Labor publishes the official employee notice in two variations; one for contractors covered by the Railway Labor Act and a second for all other contractors. The Contractor shall—

(1) Obtain the required employee notice poster from the Division of Interpretations and Standards, Office of Labor-Management Standards, U.S. Department of Labor, 200 Constitution Avenue, NW, Room N–5605, Washington, DC 20210, or from any field office of the Department's Office of Labor-Management Standards or Office of Federal Contract Compliance Programs;

(2) Download a copy of the poster from the Office of Labor-Management Standards website at *http://www.olms.dol.gov*; or

(3) Reproduce and use exact duplicate copies of the Department of Labor's official poster.

(g) The Contractor shall include the substance of this clause in every subcontract or purchase order that exceeds the simplified acquisition threshold, entered into in connection with this contract, unless exempted by the Department of Labor Deputy Assistant Secretary for Labor–Management Programs on account of special circumstances in the national interest under authority of 29 CFR 470.3(c). For indefinite quantity subcontracts, the Contractor shall include the substance of this clause if the value of orders in any calendar year of the subcontract is expected to exceed the simplified acquisition threshold. Pursuant to 29 CFR part 470, Subpart B—Compliance Evaluations, Complaint Investigations and Enforcement Procedures, the Secretary of Labor may direct the Contractor to take such action in the enforcement of these regulations, including the imposition of sanctions for noncompliance with respect to any such subcontract or purchase order. If the Contractor becomes involved in litigation with a subcontractor or vendor, or is threatened with such involvement, as a result of such direction, the Contractor may request the United States, through the Secretary of Labor, to enter into such litigation to protect the interests of the United States.

(End of clause)

■ 7. Amend section 52.244–6 by revising the date of the clause; redesignating paragraph (c)(1)(v) as (c)(1)(vi), and adding a new paragraph (c)(1)(v) to read as follows:

52.244–6 Subcontracts for Commercial Items.

* * * * *

SUBCONTRACTS FOR COMMERCIAL ITEMS (DEC 2004)

* * * * *

(c)(1) * * *

(v) 52.222–39, Notification of Employee Rights Concerning Payment of Union Dues or Fees (DEC 2004) (E.O. 13201). Flow down as required in accordance with paragraph (g) of FAR clause 52.222–39).

* * * * *

[FR Doc. 04–27636 Filed 12–17–04; 8:45 am]

BILLING CODE 6820–EP–S

DEPARTMENT OF DEFENSE

GENERAL SERVICES ADMINISTRATION

NATIONAL AERONAUTICS AND SPACE ADMINISTRATION

48 CFR Part 19

[FAC 2001–26; FAR Case 2003–010; Item V]

RIN 9000–AJ90

Federal Acquisition Regulation; Mentor Protégé Program—Delegation of Approval Authority for Mentor Protégé Agreements

AGENCIES: Department of Defense (DoD), General Services Administration (GSA), and National Aeronautics and Space Administration (NASA).

ACTION: Final rule.

SUMMARY: TheCivilian Agency Acquisition Council and the Defense Acquisition Regulations Council (Councils) have agreed on a final rule amending the Federal Acquisition Regulation (FAR) to change the approval authority of Mentor Protégé Agreements to the DoD Military Departments or Defense Agencies.

DATES: Effective Date: January 19, 2005.

FOR FURTHER INFORMATION CONTACT: The FAR Secretariat at (202) 501–4755 for information pertaining to status or publication schedules. For clarification of content, contact Ms. Rhonda Cundiff, Procurement Analyst, at (202) 501–0044. Please cite FAC 2001–26, FAR case 2003–010.

SUPPLEMENTARY INFORMATION:

A. Background

This final rule amends FAR 19.702, Statutory Requirements, to change the approval authority of Mentor Protégé Agreements to the DoD Military Departments or Defense Agencies. This change is being made in order for DOD to streamline and transform itself to more effectively achieve its mission. The Pilot Mentor-Protégé Program was established under Section 831 of Pub. L. 101–510, the National Defense Authorization Act for Fiscal Year 1991 (10 U. S. C. 2302 note). The purpose of the Program is to provide incentives to major Department of Defense (DoD) contractors to assist protégé firms in

enhancing their capabilities to satisfy DoD and other contract and subcontract requirements. Under the Mentor-Protégé Program, eligible companies approved as mentor firms will enter into mentor-protégé agreements with eligible protégé firms to provide appropriate developmental assistance to enhance the capabilities of the protégé firms to perform as subcontractors and suppliers. DoD may provide the mentor firm with either cost reimbursement or credit against applicable subcontracting goals established under contracts with DoD or other Federal agencies.

The Department of Defense, in an effort to streamline and transform itself in order to more effectively achieve its mission and in recognition that the Military Departments have the necessary expertise to manage programs efficiently, is transferring the management of the Mentor Protégé program to the Military Departments and Defense Agencies. The Office of the Secretary of Defense will maintain oversight and policy development responsibilities.

DoD, GSA, and NASA published a proposed rule in the **Federal Register** at 69 FR 18244, April 6, 2004, with request for comments. One respondent submitted a comment that was outside the scope of the rule and no action was taken. The Councils agreed to convert the proposed rule to a final rule.

Accordingly, the FAR is amended to state that the Director, Small and Disadvantaged Business Utilization of the cognizant DoD Military Department or Defense Agency, will be the approval authority for mentor-protégé agreements.

This is not a significant regulatory action and, therefore, was not subject to review under Section 6(b) of Executive Order 12866, Regulatory Planning and Review, dated September 30, 1993. This rule is not a major rule under 5 U.S.C. 804.

B. Regulatory Flexibility Act

The Department of Defense, the General Services Administration, and the National Aeronautics and Space Administration certify that this final rule will not have a significant economic impact on a substantial number of small entities within the meaning of the Regulatory Flexibility Act, 5 U.S.C. 601, *et seq.*, because the rule removes a restriction, thus allowing DoD to make a minor policy change.

C. Paperwork Reduction Act

The Paperwork Reduction Act does not apply because the changes to the FAR do not impose information collection requirements that require the approval of the Office of Management and Budget under 44 U.S.C. 3501, *et seq.*

List of Subjects in 48 CFR Part 19

Government procurement.

Dated: December 9, 2004.

Laura Auletta,

Director, Contract Policy Division.

■ Therefore, DoD, GSA, and NASA amend 48 CFR part 19 as set forth below:

■ 1. The authority citation for 48 CFR part 19 is revised to read as follows:

PART 19—SMALL BUSINESS PROGRAMS

Authority: 40 U.S.C. 121(c); 10 U.S.C. chapter 137; and 42 U.S.C. 2473(c).

■ 2. Amend section 19.702 by revising paragraph (d) to read as follows:

19.702 Statutory requirements.

* * * * *

(d) As authorized by 15 U.S.C. 637(d)(11), certain costs incurred by a mentor firm in providing developmental assistance to a protégé firm under the Department of DefensePilot Mentor-Protégé Program, may be credited as if they were subcontract awards to a protégé firm for the purpose of determining whether the mentor firm attains the applicable goals under any subcontracting plan entered into with any executive agency. However, the mentor-protégé agreement must have been approved by the Director, Small and Disadvantaged Business Utilization of the cognizant DoD military department or defense agency, before developmental assistance costs may be credited against subcontract goals. A list of approved agreements may be obtained at *http://www.acq.osd.mil/sadbu/mentor__protege/* or by calling (703) 588–8631.

[FR Doc. 04–27637 Filed 12–17–04; 8:45 am]

BILLING CODE 6820–EP–S

DEPARTMENT OF DEFENSE

GENERAL SERVICES ADMINISTRATION

NATIONAL AERONAUTICS AND SPACE ADMINISTRATION

48 CFR Part 42

[FAC 2001–26; FAR Case 2001–018; Item VI]

RIN 9000–AJ77

Federal Acquisition Regulation; Applicability of the Cost Principles and Penalties for Unallowable Costs

AGENCIES: Department of Defense (DoD), General Services Administration (GSA), and National Aeronautics and Space Administration (NASA).

ACTION: Final rule.

SUMMARY: The Civilian Agency Acquisition Council and the Defense Acquisition Regulations Council (Councils) have agreed on a final rule amending the Federal Acquisition Regulation (FAR) by increasing the contract dollar threshold for assessing a penalty if the contractor includes expressly unallowable costs in its claim for reimbursement.

DATES: Effective Date: January 19, 2005.

FOR FURTHER INFORMATION CONTACT: The FAR Secretariat at (202) 501–4755 for information pertaining to status or publication schedules. For clarification of content, contact Mr. Richard C. Loeb at (202) 208–3810. Please cite FAC 2001–26, FAR case 2001–018.

SUPPLEMENTARY INFORMATION:

A. Background

DoD, GSA, and NASA published a proposed rule in the **Federal Register** at 68 FR 66988 on November 28, 2003, with request for comments. The Councils proposed to amend the FAR to: (1) remove the requirement to apply the cost principles and procedures at FAR Part 31 when pricing a contract if cost or pricing data are not obtained; (2) add a definition to FAR Part 31 for fixed-price contracts, subcontracts, and modifications; and (3) increase the contract dollar threshold for assessing a penalty if the contractor includes expressly unallowable costs in its claim for reimbursement (FAR Part 42). Three respondents submitted comments on the proposed FAR rule; a discussion of the comments are provided below. The Councils considered all comments and decided not to adopt the proposed revisions to FAR Parts 15 and 31, and to convert the proposed rule at FAR Part 42 to a final rule. Differences between

the proposed rule and final rule are discussed in comments 1, 2, and 3, below.

This is not a significant regulatory action and, therefore, was not subject to review under Section 6(b) of Executive Order 12866, Regulatory Planning and Review, dated September 30, 1993. This rule is not a major rule under 5 U.S.C. 804.

Public Comments:

Applicability of FAR Part 31

1. *Comment:* Two of the three respondents believe the change should not be made.

The first respondent urged the withdrawal of the proposed rule and expressed the position that the need for the proposed change was not clearly and fully disclosed. The respondent strongly believes that the Government's prenegotiation objective for cost based fixed-price contracts should continue to be predicated on the consistent application of applicable FAR Part 31 cost principles. Whether a contractor's submitted cost data is ''certified'' or ''uncertified'' should not alter the basis for determining the Government's prenegotiation objective, or a determination on whether the negotiated fixed-price is fair and reasonable.

The respondent noted that FAR Part 31 has more than just unallowable costs within it, *e.g.,* allocability, consistency, direct vs. indirect, and accounting methods. The respondent also made the following points:

- If FAR Subpart 31.2 policies and procedures are not consistently applied to cost-based fixed-price contracts, what are the alternate policies, procedures and principles to be applied when performing a ''cost analysis'' of the ''uncertified'' information other than cost or pricing data?
- What fundamental constructs will the proposing contractor have to comply with?
- What will guide the cost analyst and/or auditor when performing the ''cost analysis'' of the contractor's uncertified data?

After referencing the Councils' stated goal ''...to reduce Government unique regulations when the risk to the Government is low,'' the respondent opined:

When negotiating fixed-price contracts based on a prenegotiation objective that was predicated on a ''cost analysis'' of contractor submitted information other than cost or pricing cost data, the respondent believes that the risk to the Government is higher, not lower, than if ''certified'' cost or pricing data had been obtained. Without certified data, there is less assurance that contractor submitted data are current, complete and accurate.

The respondent concluded that FAR Part 31 contract cost principles should continue to be applied to pricing contracts whenever cost data is submitted to support a contract price, regardless of whether the contract type is fixed-price.

The second respondent believes that the Government's policy objective should be clarified, and that the mention of cost analysis is potentially confusing and unnecessary. The respondent characterized the phrasing of the proposed rule as terribly awkward (due to using the passive voice) and suggested alternative language.

The third respondent was concerned that the proposed coverage at FAR 31.000 appears to restrict in some way the underlying Truth in Negotiations Act (TINA) mandate to obtain cost or pricing data in the first place (as to both negotiated contracts and negotiated modifications).

Councils' response: Concur that the proposed change should not be made. The Councils believe that the Government needs a consistent playing field when dealing with cost data whether ''certified'' or not. The Councils are also concerned that the proposed language could be construed as limiting the Government's use of FAR Part 31 for its prenegotiation positions. This would adversely affect any requests for audit support made by the contracting officer. The General Accepted Government Auditing Standards (GAGAS) under attestation standards AT 101.23, ''Suitability of Criteria,'' require auditors to have objective, measurable, complete, and relevant criteria to apply during their work. The Councils believe that the guidance in FAR Part 31 meets these requirements, as General Accepted Accounting Principles (GAAP) alone does not go to the level necessary to support contract pricing. Therefore, the Councils have withdrawn the proposed revisions to FAR Parts 15 and 31.

Definition of fixed-price contracts

2. *Comment:* Two respondents believe the proposed FAR 31.001 definition of fixed-price contracts, subcontracts and modifications would lead to confusion in the area of Time-and-Material (T&M) type contracting actions.

The first respondent stated that it strongly opposes the proposed ''redefinition'' of fixed-price contracts to include the fixed hourly portion of a T&M and labor-hour (LH) contract, and that it flies in the face of law and common sense. The respondent cited GSBCA decision CACI, Inc.—Federal v. General Services Administration, dated December 13, 2002, to support its position that T&M/LH contracts are not fixed-price. The respondent believes that the Council's attempt to rationalize a portion a T&M/LH contract as ''fixed-price'' is a shameful capitulation to contractors interests, and an abrogation of the Council's duty to taxpayers.

The second respondent was concerned the proposed definition may impact T&M orders placed under GSA's Multiple Award Schedule (MAS) contracts. The proposed definition would include the fixed hourly rate portion of the T&M and LH contracts and subcontracts in FAR Subpart 16.6. The respondent believes this may suggest that time-and-material orders with a fixed labor hour component are fixed-price in nature for any contracting or FAR purpose. GSA mandates that all T&M orders placed under MAS contracts include the contract clause at FAR 52.232–7, Payments under Time-and-Materials and Labor-Hour Contracts. This clause provides contracting officers with an ability to require more substantiation of hours worked under a time-and-materials order. Because such task orders have fixed labor components, the respondent is concerned that contracting officers may—based on this proposed FAR change—consider such task orders to be fixed price and not invoke the controls attendant with this clause or other necessary safeguards to the use of such vehicles.

Councils' response: Partially concur. The Councils believe there is a limited risk that contracting officers could be confused by the inclusion of the ''fixed rate portion'' of a T&M contracting action in the proposed definition. However, due to the Council's decision not to adopt the proposed revisions discussed at Comment 1, above, this definition is no longer required.

Dollar threshold for assessing penalties—FAR 42.709

3. *Comment:* One respondent stated that it had no objection to the proposed change in the threshold from the current $500,000 to $550,000 to adjust for inflation. The other two respondents did not address the proposed change.

Councils' response: Concur. The Councils agree that the contract dollar threshold for assessing a penalty if the contractor includes expressly unallowable costs in its claim for reimbursement should be increased from $500,000 to $550,000, to adjust for inflation. This increase is authorized by 10 U.S.C. 2324(l) and 41 U.S.C. 256(1). Therefore, the dollar threshold amounts

in FAR 42.709(b) and FAR 42.709–6 are increased from $500,000 to $550,000.

B. Regulatory Flexibility Act

The Department of Defense, the General Services Administration, and the National Aeronautics and Space Administration certify that this final rule will not have a significant economic impact on a substantial number of small entities within the meaning of the Regulatory Flexibility Act, 5 U.S.C. 601, *et seq.*, because most contracts awarded to small entities use simplified acquisition procedures or are awarded on a competitive, fixed-price basis, and do not require application of the cost principles discussed in this rule.

C. Paperwork Reduction Act

The Paperwork Reduction Act does not apply because the changes to the FAR do not impose information collection requirements that require the approval of the Office of Management and Budget under 44 U.S.C. 3501, *et seq.*

List of Subjects in 48 CFR Part 42

Government procurement.

Dated: December 9, 2004.

Laura Auletta,

Director, Contract Policy Division.

■ Therefore, DoD, GSA, and NASA amend 48 CFR part 42 as set forth below:

PART 42—CONTRACT ADMINISTRATION AND AUDIT SERVICES

■ 1. The authority citation for 48 CFR part 42 is revised to read as follows:

Authority: 40 U.S.C. 121(c); 10 U.S.C. chapter 137; and 42 U.S.C. 2473(c).

42.709 and 42.709–6 [Amended]

■ 2. Amend sections 42.709(b) and 42.709–6 by removing ''$500,000'' and adding ''$550,000'' in its place.

[FR Doc. 04–27638 Filed 12–17–04; 8:45 am]

BILLING CODE 6820–EP–S

DEPARTMENT OF DEFENSE

GENERAL SERVICES ADMINISTRATION

NATIONAL AERONAUTICS AND SPACE ADMINISTRATION

48 CFR Parts 11, 41, 44, 51, and 52

[FAC 2001-26; Item VII]

Federal Acquisition Regulation; Technical Amendments

AGENCIES: Department of Defense (DoD), General Services Administration (GSA), and National Aeronautics and Space Administration (NASA).

ACTION: Final rule.

SUMMARY: This document makes amendments to the Federal Acquisition Regulation (FAR) in order to make editorial changes.

DATE: *Effective Date:* December 20, 2004.

FOR FURTHER INFORMATION CONTACT: The FAR Secretariat, Room 4035, GS Building, Washington, DC, 20405, (202) 501-4755, for information pertaining to status or publication schedules. Please cite FAC 2001-26, Technical Amendments.

List of Subjects in 48 CFR Parts 11, 41, 44, 51, and 52

Government procurement.

Dated: December 9, 2004.

Laura Auletta,

Director, Contract Policy Division.

■ Therefore, DoD, GSA, and NASA amend 48 CFR parts 11, 41, 44, 51, and 52 as set forth below:

■ 1. The authority citation for 48 CFR parts 11, 41, 44, 51, and 52 is revised to read as follows:

Authority: Authority: 40 U.S.C. 121(c); 10 U.S.C. chapter 137; and 42 U.S.C. 2473(c).

PART 11—DESCRIBING AGENCY NEEDS

11.201 [Amended]

■ 2. Amend section 11.201 in paragraph (d)(2)(i) by removing *http://assist.daps.mil* and adding *http://assist.daps.dla.mil* in its place.

PART 41—ACQUISITION OF UTILITY SERVICES

■ 3. Amend section 41.301 by revising the second sentence of paragraph (a) to read as follows:

41.301 Requirements.

(a) * * * The names and locations of GSA regional offices are available from the General Services Administration, Energy Center of Expertise, 301 7th Street, SW., Room 4004, Washington, DC 20407.

* * * * *

PART 44—SUBCONTRACTING POLICIES AND PROCEDURES

44.203 [Amended]

■ 4. Amend section 44.203 in paragraph (b)(1) by removing ''16.301-3'' and adding ''15.404-4(c)(4)(i)'' in its place.

PART 51—USE OF GOVERNMENT SOURCES BY CONTRACTORS

51.102 [Amended]

■ 5. Amend section 51.102 by removing ''FCSI'' from paragraph (c)(1) and adding ''FXS'' in its place.

PART 52—SOLICITATION PROVISIONS AND CONTRACT CLAUSES

52.219–1 [Amended]

■ 6. Amend section 52.219-1 by removing ''19.307(a)(1)'' from the introductory text and adding ''19.308(a)(1)'' in its place.

[FR Doc. 04–27639 Filed 12–17–04; 8:45 am]

BILLING CODE 6820–EP–S

DEPARTMENT OF DEFENSE

GENERAL SERVICES ADMINISTRATION

NATIONAL AERONAUTICS AND SPACE ADMINISTRATION

48 CFR Chapter 1

Federal Acquisition Regulation; Small Entity Compliance Guide

AGENCIES: Department of Defense (DoD), General Services Administration (GSA), and National Aeronautics and Space Administration (NASA).

ACTION: Small Entity Compliance Guide.

SUMMARY: This document is issued under the joint authority of the Secretary of Defense, the Administrator of General Services and the Administrator for the National Aeronautics and Space Administration. This *Small Entity Compliance Guide* has been prepared in accordance with Section 212 of the Small Business Regulatory Enforcement Fairness Act of 1996. It consists of a summary of rules appearing in Federal Acquisition Circular (FAC) 2001–26 which amend the FAR. An asterisk (*) next to a rule indicates that a regulatory flexibility analysis has been prepared. Interested parties may obtain further information regarding these rules by referring to FAC 2001–26, which precedes this document. These documents are also

available via the Internet at *http://www.acqnet.gov/far.*

FOR FURTHER INFORMATION CONTACT: Laurie Duarte, FAR Secretariat, (202) 501–4225. For clarification of content, contact the analyst whose name appears in the table below.

LIST OF RULES IN FAC 2001–26

Item	Subject	FAR case	Analyst
*I	Electronic Representations and Certifications	2002–024	Zaffos.
II	Excluded Parties List System Enhancement	2002–023	Goral.
*III	Special Emergency Procurement Authority	2003–022	Zaffos.
IV	Notification of Employee Rights Concerning Payment of Union Dues or Fees (Interim)	2004–010	Goral.
V	Mentor Protégé Program—Delegation of Approval Authority for Mentor Protégé Agreements	2003–010	Cundiff.
VI	Applicability of the Cost Principles and Penalties for Unallowable Costs	2001–018	Loeb.
VII	Technical Amendments.		

Item I—Electronic Representations and Certifications (FAR Case 2002–024)

This final rule requires offerors to provide representations and certifications electronically via the BPN website; to update the representations and certifications as necessary, but at least annually, to keep them current, accurate and complete; and to make changes that affect only one solicitation by completing the appropriate sections of either paragraph (j) of FAR provision 52.212–3 or FAR provision 52.204–8, whichever is included in the solicitation. This change represents a conversion of a paper-based process to a more efficient electronic process to obtain offerors' representations and certifications. It will also significantly reduce the paperwork burden for both offerors and contracting officers.

Item II—Excluded Parties List System Enhancement (FAR Case 2002–023)

This final rule amends the FAR to incorporate the Excluded Parties List System (EPLS), GSA's new searchable on-line electronic list of parties excluded from doing business with the Federal Government. The EPLS enables agencies to directly input data into this system and obviates the need for the hard copy List of Parties Excluded from Federal Procurement and Nonprocurement Programs. The EPLS will provide more up-to-date and readily accessible information to the contracting officer on parties excluded from doing business with the Federal Government.

Item III—Special Emergency Procurement Authority (FAR Case 2003–022)

This rule finalizes the interim rule 2003–022 by including under FAR subpart 13.5 the acquisition of supplies and services that meet the definition of a commercial item in FAR 2.101, and which, as determined by the head of the agency, are to be used to support a contingency operation. This final rule implements Section 1443 of the Services Acquisition Reform Act of 2003 (41 U.S.C. 428a) and also incorporates the higher thresholds authorized by Section 822 of the Ronald W. Reagan National Defense Authorization Act for Fiscal Year 2005. This rule allows the contracting officer expanded use of Simplified Acquisition and Commercial Items procedures when acquiring supplies or services that, as determined by the head of the agency, are to be used in support of a contingency operation or to facilitate the defense against or the recovery from nuclear, biological, chemical or radiological attack.

Item IV—Notification of Employee Rights Concerning Payment of Union Dues or Fees (FAR Case 2004–010)

This interim rule amends FAR Parts 2, 22, and 52 to implement Executive Order (E.O.) 13201, Notification of Employee Rights Concerning Payment of Union Dues or Fees, and Department of Labor regulations at 29 CFR part 470. The rule requires Government contractors and subcontractors to post notices informing their employees that under Federal law they cannot be required to join a union or maintain membership in a union to retain their jobs. The required notice also advises employees who are not union members that they can object to the use of their union dues for certain purposes. This rule applies to Federal contractors and subcontractors with contracts or subcontracts that exceed the simplified acquisition threshold, unless covered by an exemption granted by the Secretary of Labor.

Item V—Mentor Protégé Program—Delegation of Approval Authority for Mentor Protégé Agreements (FAR Case 2003–010)

This final rule amends FAR 19.702, Statutory Requirements, to change the approval authority of the Mentor Protégé Agreements to the DoD Military Departments or Defense Agencies and to make some minor changes for clarification. This change is being made in order for DoD to streamline and transform itself to more effectively achieve its mission.

Item VI—Applicability of the Cost Principles and Penalties for Unallowable Costs (FAR Case 2001–018)

This final rule increases the threshold at FAR 42.709(b) and FAR 42.709–6 from $500,000 to $550,000 for contracts subject to penalties if a contractor includes expressly unallowable costs in a claim for reimbursement. The threshold was increased to reflect inflation and is authorized by 10 U.S.C. 2324(l) and 41 U.S.C. 256(l).

The rule is of importance to contracting officers and contractors who negotiate contracts and modifications, and determine costs in accordance with FAR Part 31 contract cost principles.

Item VII—Technical Amendments

Editorial changes are made at FAR 11.201(d)(2)(i), 41.301(a), 44.203(b)(1), 51.102(c)(1), and in the introductory text of FAR provision 52.219–1 in order to update references.

Dated: December 9, 2004.

Laura Auletta,

Director, Contract Policy Division.

[FR Doc. 04–27640 Filed 12–17–04; 8:45 am]

BILLING CODE 6820–EP–S

Federal Register

Monday,
December 20, 2004

Part VI

Department of the Interior

Fish and Wildlife Service

50 CFR Part 92

Migratory Bird Subsistence Harvest in Alaska; Harvest Regulations for Migratory Birds in Alaska During the 2005 Season; Proposed Rule

DEPARTMENT OF THE INTERIOR

Fish and Wildlife Service

50 CFR Part 92

RIN 1018–AT77

Migratory Bird Subsistence Harvest in Alaska; Harvest Regulations for Migratory Birds in Alaska During the 2005 Season

AGENCY: Fish and Wildlife Service, Interior.

ACTION: Proposed rule.

SUMMARY: The U.S. Fish and Wildlife Service (Service or we) is proposing migratory bird subsistence harvest regulations in Alaska for the 2005 season. This proposed rule would establish regulations that prescribe frameworks, or outer limits, for dates when harvesting of birds may occur, species that can be taken, and methods and means that would be excluded from use. These regulations were developed under a co-management process involving the Service, the Alaska Department of Fish and Game, and Alaska Native representatives. These regulations are intended to provide a framework to enable the continuation of customary and traditional subsistence uses of migratory birds in Alaska. The rulemaking is necessary because the regulations governing the subsistence harvest of migratory birds in Alaska are subject to annual review. This rulemaking proposes regulations that start on April 2, 2005, and expire on August 31, 2005, for the subsistence harvest of migratory birds in Alaska.

DATES: You must submit comments on the proposed subsistence harvest regulations for migratory birds in Alaska by February 18, 2005.

ADDRESSES: Send your comments on this proposed rule to the Regional Director, Alaska Region, U.S. Fish and Wildlife Service, 1011 E. Tudor Road, Anchorage, AK 99503, or fax to (907) 786–3306 or e-mail to *ambcc@fws.gov.*

FOR FURTHER INFORMATION CONTACT: Fred Armstrong, (907) 786–3887, or Donna Dewhurst, (907) 786–3499, U.S. Fish and Wildlife Service, 1011 E. Tudor Road, Mail Stop 201, Anchorage, AK 99503.

SUPPLEMENTARY INFORMATION:

Background

What Events Led to This Action?

In 1916, the United States and Great Britain (on behalf of Canada) signed the Convention for the Protection of Migratory Birds in Canada and the United States (Canada Treaty). The treaty prohibited all commercial bird hunting and specified a closed season on the taking of migratory game birds between March 10 and September 1 of each year. In 1936, the United States and Mexico signed the Convention for the Protection of Migratory Birds and Game Mammals (Mexico Treaty). The Mexico treaty prohibited the taking of wild ducks between March 10 and September 1. Neither treaty allowed adequately for the traditional harvest of migratory birds by northern peoples during the spring and summer months. This harvest, which has occurred for centuries, was and is necessary to the subsistence way of life in the north and thus continued despite the closed season.

The Canada treaty and the Mexico treaty, as well as migratory bird treaties with Japan (1972) and Russia (1976), have been implemented in the United States through the Migratory Bird Treaty Act (MBTA). The courts have ruled that the MBTA prohibits the Federal Government from permitting any harvest of migratory birds that is inconsistent with the terms of any of the migratory bird treaties. The more restrictive terms of the Canada and Mexico treaties thus prevented the Federal Government from permitting the traditional subsistence harvest of migratory birds during spring and summer in Alaska. To remedy this situation, the United States negotiated Protocols amending both the Canada and Mexico treaties to allow for subsistence harvest of migratory birds by indigenous inhabitants of identified subsistence harvest areas in Alaska. The U.S. Senate approved the amendments to both treaties in 1997.

What Has the Amended Treaty Accomplished?

The major goals of the amended treaty with Canada were to allow traditional subsistence harvest and improve conservation of migratory birds by allowing effective regulation of this harvest.

The amended treaty with Canada provides a means to allow permanent residents of villages within subsistence harvest areas, regardless of race, to continue harvesting migratory birds between March 10 and September 1 as they have done for thousands of years. The Letter of Submittal of May 20, 1996, from the Department of State to the White House that officially accompanied the treaty protocol set the geographic baseline with lands north and west of the Alaska Range and within the Alaska Peninsula, Kodiak Archipelago, and the Aleutian Islands as the initial subsistence harvest areas.

What Has the Service Accomplished Since Ratification of the Amended Treaty?

In 1998, we began a public involvement process to determine how to structure management bodies to provide the most effective and efficient involvement for subsistence users. This process was concluded on March 28, 2000, when we published in the **Federal Register** (65 FR 16405) the Notice of Decision: ''Establishment of Management Bodies in Alaska to Develop Recommendations Related to the Spring/Summer Subsistence Harvest of Migratory Birds.'' This notice described the establishment and organization of 12 regional management bodies plus the Alaska Migratory Bird Co-management Council (Co-management Council).

Establishment of a migratory bird subsistence harvest began on August 16, 2002, when we published in the **Federal Register** (67 FR 53511) a final rule at 50 CFR part 92 that set procedures for incorporating subsistence management into the continental migratory bird management program. These regulations established an annual procedure to develop harvest guidelines to implement a subsistence migratory bird harvest.

The next step established the first subsistence migratory bird harvest system. This was finalized on July 21, 2003, when we published in the **Federal Register** (68 FR 43010) a final rule at 50 CFR parts 20, 21 and 92 that created the first annual harvest regulations for the 2003 subsistence migratory bird season in Alaska. These annual frameworks were not intended to be a complete, all-inclusive set of regulations, but were intended to regulate continuation of customary and traditional subsistence uses of migratory birds in Alaska during the spring and summer. See the August 16, 2002, July 21, 2003, and April 2, 2004, final rules for additional background information on the subsistence harvest program for migratory birds in Alaska.

This current rulemaking is necessary because the migratory bird harvest season is closed unless opened and the regulations governing subsistence harvest of migratory birds in Alaska are subject to public review and annual approval. The Co-management Council held a meeting in April 2004, to develop recommendations for changes effective for the 2005 harvest season. These recommendations were presented to the Service Regulations Committee (SRC) on July 28 and 29, 2004, for action.

This rule proposes regulations for the taking of migratory birds for subsistence uses in Alaska during 2005. This rule proposes to list migratory bird species that are open or closed to harvest, as well as season openings and closures by region. It also proposes minor changes in the methods and means of taking migratory birds for subsistence purposes. We propose to amend 50 CFR 92.5 by adding three new communities to the list of included areas, and to add corresponding harvest areas and season dates to 50 CFR 92.33.

How Will the Service Continue To Ensure That the Subsistence Harvest Will Not Raise Overall Migratory Bird Harvest?

The Service has an emergency closure provision (§ 92.21), so that if any significant increases in harvest are documented for one or more species in a region, an emergency closure can be requested and implemented. Eligibility to harvest under the regulations established in 2003 was limited to permanent residents, regardless of race, in villages located within the Alaska Peninsula, Kodiak Archipelago, the Aleutian Islands and in areas north and west of the Alaska Range (§ 92.5). These geographical restrictions opened the initial subsistence migratory bird harvest to only about 13 percent of Alaska residents. High-population areas such as Anchorage, the Matanuska-Susitna and Fairbanks North Star boroughs, the Kenai Peninsula roaded area, the Gulf of Alaska roaded area and Southeast Alaska were excluded from the eligible subsistence harvest areas.

Based on petitions requesting inclusion in the harvest, in 2004, we added 13 additional communities based on the five criteria set forth in § 92.5(c). These communities included: Gulkana, Gakona, Tazlina, Copper Center, Mentasta Lake, Chitina, Chistochina, Tatitlek, Chenega, Port Graham and Nanwalek, Tyonek and Hoonah, populations totaling 2,766. For 2005, we propose to add three additional communities for glaucous-winged gull egg gathering only. These southeastern communities include Craig, Hydaburg, and Yakutat, with a combined population of 2,459. These new regions would increase the percentage of the State population included in the subsistence bird harvest only to 14 percent.

Subsistence harvest has been monitored for the past 15 years through the use of annual household surveys in the most heavily used subsistence harvest areas, *e.g.*, Yukon-Kuskokwim Delta. Continuation of this monitoring would enable tracking of any major changes or trends in levels of harvest and user participation after legalization of the harvest. In the March 3, 2003, **Federal Register** (68 FR 10024), we published a notice of intent to submit the Alaska Subsistence Household Survey Information Collection Forms to the Office of Management and Budget (OMB) for approval under the Paperwork Reduction Act, with a subsequent 60-day public comment period. In the July 31, 2003, **Federal Register** (68 FR 44961), we published a notice that the Alaska Subsistence Harvest Survey Information Collection Forms were submitted to OMB for approval under the Paperwork Reduction Act, with a 30-day public comment period. OMB approved the information collection on October 2, 2003, and assigned OMB control number 1018–0124, which expires on October 31, 2006.

How Did the Service Develop the Methods and Means Prohibitions, and What Is Proposed To Change for 2005?

In development of the initial regulations (68 FR 6697), the Co-management Council encouraged the Service to adopt the existing methods and means prohibitions that occur in the Federal (50 CFR 20.21) and Alaska (5AAC92.100) migratory bird hunting regulations. We included some exceptions to the Federal regulations in the initial regulations and include some in this proposed rule to allow the continuation of customary and traditional spring harvest methods, but not the creation of new proposed traditions. In this proposed rule, we have incorporated the Bering Strait/Norton Sound region's request to add St. Lawrence Island to the list of areas where an exception allows the use of live decoys to harvest auklets.

How Did the Service Decide the List of Birds Open To Harvest and What Is Proposed To Change for 2005?

The Service believes it is necessary to develop a list of bird species that would be open to subsistence harvest. The original list was compiled from subsistence harvest data, with several species added based on their presence in Alaska. The original intent was for the list to be reviewed by the regional management bodies as a check list. The list was adopted by the Co-management Council as part of the guidelines for the 2003 season. Most of the regions adopted the list as written; however, two regions created their own lists. One regional representative explained that it would take much more time than was available for his region to reduce the list and that, once a bird was removed, returning it to the list would be more difficult later. Going with the original list was viewed as protecting hunters from prosecution for the take of an unlisted bird. To understand this rationale, one must be aware that subsistence hunting is generally opportunistic and does not usually target individual species. Native language names for birds often group closely related species, with no separate names for species within these groups. Also, preferences for individual species differ greatly between villages and individual hunters. As a result, regions are hesitant to remove birds from the list open to harvest until they are certain the species are not taken for subsistence use. The list therefore contains some species that are taken infrequently and opportunistically, but this is still part of the subsistence tradition. The Co-management Council initially decided to call this list ''potentially harvested birds'' versus ''traditionally harvested birds'' because a detailed written documentation of the customary and traditional use patterns for the species listed had not yet been conducted. However, this terminology was leading to some confusion, so the Service renamed the list ''subsistence birds'' to cover the birds open to harvest.

The ''customary and traditional use'' of a wildlife species has been defined in Federal regulations (50 CFR 100.4) as a long-established, consistent pattern of use, incorporating beliefs and customs that have been transmitted from generation to generation. Much of the customary and traditional use information has not been documented in written form, but exists in the form of oral histories from elders, traditional stories, harvest methods taught to children, and traditional knowledge of the birds' natural history shared within a village or region. The primary source of quantitative data on customary and traditional use of the harvested bird species comes from Alaska subsistence migratory bird harvest surveys conducted by Service personnel and contractors and transferred to a computerized database. Because of difficulties in bird species identification, shorebird harvest information has been lumped into ''large shorebird'' and ''small shorebird'' categories. In reality, Alaska subsistence harvests are also conducted in this manner, generally with no targeting or even recognition of individual shorebird species in most cases.

Based on conservation concerns, we propose to close the harvest of tundra swans in Units 9(D) and 10 starting in 2005. This decision was made to protect a small resident population segment of

fewer than 500 tundra swans in the Izembek National Wildlife Refuge area. This small segment of the Pacific population is nonmigratory and appears to be morphologically distinct. Breeding pair surveys indicate that the local population has declined steadily over the past two decades and recruitment into the population is low.

At the request of the North Slope Borough Fish and Game Management Committee, the Co-Management Council recommended adding a provision to allow subsistence use of yellow-billed loons inadvertently caught in subsistence fishing (gill) nets on the North Slope. Justification given by the proponent was that yellow-billed loons are culturally important for the Inupiat Eskimo of the North Slope for use in traditional dance regalia. The Service Regulations Committee met on July 29, 2004, and proposed to set a maximum of 20 yellow-billed loons inadvertently caught annually in the North Slope Region. Individual reporting to the North Slope Borough Department of Wildlife will be required by the end of the season. In addition, the North Slope Borough is planning to ask fishermen, through announcements on the radio and through personal contact, to report all entanglements of loons to better estimate the levels of injury or mortality caused by gill nets. This provision to allow subsistence possession and use of yellow-billed loons caught in fishing gill nets is subject to annual review and renewal as part of Subpart D—Annual Regulations Governing Subsistence Harvest.

How Does the Service Address the Birds of Conservation Concern Relative to the Subsistence Harvest?

Birds of Conservation Concern (BCC) 2002 is the latest document in a continuing effort by the Service to assess and prioritize bird species for conservation purposes. It was published in the **Federal Register** on February 6, 2003 (68 FR 6179). The BCC list identifies bird species at risk because of inherently small populations, restricted ranges, severe population declines, or imminent threats. The species listed need increased conservation attention to maintain or stabilize populations. The legal authority for this effort is the Fish and Wildlife Conservation Act (FWCA) of 1980, as amended. Section 13(a)(3) of the FWCA, 16 U.S.C. 2912(a)(3), requires the Secretary of the Interior through the Service, to ''identify species, subspecies and populations of all migratory nongame birds that, without additional conservation actions, are likely to become candidates for listing under the Endangered Species Act of 1973, as amended (16 U.S.C. 1531–1543).''

The Co-management Council will continually review the list of subsistence birds. As appropriate, the Council will elevate hunter awareness of species that may have small or declining populations in an effort to directly involve subsistence hunters in conserving these vulnerable species.

Public Comments Solicited

The Department of the Interior's policy is, whenever practicable, to afford the public an opportunity to participate in the rulemaking process. If you wish to comment, you may submit comments by any one of several methods. You may mail, fax, or hand-deliver comments to the address indicated under the caption **ADDRESSES.**

Our practice is to make comments, including names and home addresses of respondents, available for public review during regular business hours. Individual respondents may request that we withhold their home addresses from the rulemaking record, which we will honor to the extent allowable by law. In some circumstances, we will also withhold from the rulemaking record a respondent's identity, as allowable by law. If you wish us to withhold your name and/or address, you must state this prominently at the beginning of your comment. However, we will not consider anonymous comments. We will make all submissions from organizations or businesses, and from individuals identifying themselves as representatives or officials of organizations or businesses, available for public inspection in their entirety. You may inspect comments received on the proposed regulations during normal business hours at the Service's office in Anchorage, Alaska.

In developing the final rule, we will consider each comment received during the public comment period. In the final rule, we may not respond in detail to each comment received during the comment period, but we will summarize all comments received and respond to them.

Statutory Authority

We derive our authority to issue these regulations from the four migratory bird treaties with Canada, Mexico, Japan and Russia and from the Migratory Bird Treaty Act of 1918 (16 U.S.C. 703 *et seq.*), that implements these treaties. Specifically, these regulations are issued pursuant to 16 U.S.C. 712 (1), which authorizes the Secretary of the Interior, in accordance with these four treaties, to ''issue such regulations as may be necessary to assure that the taking of migratory birds and the collection of their eggs, by the indigenous inhabitants of the State of Alaska, shall be permitted for their own nutritional and other essential needs, as determined by the Secretary of the Interior, during seasons established so as to provide for the preservation and maintenance of stocks of migratory birds.''

Executive Order 12866

Executive Order 12866 requires each agency to write regulations that are easy to understand. We invite your comments on how to make this rule easier to understand, including answers to questions such as the following:

(1) Are the requirements in the rule clearly stated?

(2) Does the rule contain technical language or jargon that interferes with its clarity?

(3) Does the format of the rule (grouping and order of sections, use of headings, paragraphing, etc.) aid or reduce its clarity?

(4) Would the rule be easier to understand if it were divided into more (but shorter) sections?

(5) Is the description of the rule in the ''Supplementary Information'' section of the preamble helpful in understanding the rule?

(6) What else could we do to make the rule easier to understand?

Send a copy of any comments that concern how we could make this rule easier to understand to: Office of Regulatory Affairs, Department of the Interior, Room 7229, 1849 C Street NW., Washington, DC 20240. You may also e-mail the comments to this address: *Exsec@ios.doi.gov.*

The Office of Management and Budget (OMB) has determined that this document is not a significant rule subject to OMB review under Executive Order 12866.

a. This rule will not have an annual economic effect of $100 million or more or adversely affect an economic sector, productivity, jobs, the environment, or other units of government. The rule does not provide for new or additional hunting opportunities and therefore will have minimal economic or environmental impact. This rule benefits those participants who engage in the subsistence harvest of migratory birds in Alaska in two identifiable ways: First, participants receive the consumptive value of the birds harvested; and second, participants get the cultural benefit associated with the maintenance of a subsistence economy and way of life. The Service can estimate the consumptive value for birds harvested under this rule but does not have a dollar value for the cultural

benefit of maintaining a subsistence economy and way of life.

The economic value derived from the consumption of the harvested migratory birds has been estimated using the results of a paper by Robert J. Wolfe titled ''Subsistence Food Harvests in Rural Alaska, and Food Safety Issues'' (August 13, 1996). Using data from Wolfe's paper and applying it to the areas that will be included in this process, we determined a maximum economic value of $6 million. This is the estimated economic benefit of the consumptive part of this rule for participants in subsistence hunting. The cultural benefits of maintaining a subsistence economy and way of life can be of considerable value to the participants, and these benefits are not included in this figure.

b. This rule will not create inconsistencies with other agencies' actions. We are the Federal agency responsible for the management of migratory birds, coordinating with the State of Alaska's Department of Fish and Game on management programs within Alaska. The State of Alaska is a member of the Alaska Migratory Bird Co-management Council.

c. This rule will not materially affect entitlements, grants, user fees, loan programs, or the rights and obligations of their recipients. The rule does not affect entitlement programs.

d. This rule will not raise novel legal or policy issues. The subsistence harvest regulations will go through the same National regulatory process as the existing migratory bird hunting regulations in 50 CFR part 20.

Regulatory Flexibility Act

The Department of the Interior certifies that this rule will not have a significant economic effect on a substantial number of small entities as defined under the Regulatory Flexibility Act (5 U.S.C. 601 *et seq.*). An initial regulatory flexibility analysis is not required. Accordingly, a Small Entity Compliance Guide is not required. The rule legalizes a pre-existing subsistence activity, and the resources harvested will be consumed by the harvesters or persons within their local community.

Small Business Regulatory Enforcement Fairness Act

This rule is not a major rule under 5 U.S.C. 804(2), the Small Business Regulatory Enforcement Fairness Act, as discussed in the Executive Order 12866 section above.

a. This rule does not have an annual effect on the economy of $100 million or more. It will legalize and regulate a traditional subsistence activity. It will not result in a substantial increase in subsistence harvest or a significant change in harvesting patterns. The commodities being regulated under this rule are migratory birds. This rule deals with legalizing the subsistence harvest of migratory birds and, as such, does not involve commodities traded in the marketplace. A small economic benefit from this rule derives from the sale of equipment and ammunition to carry out subsistence hunting. Most, if not all, businesses that sell hunting equipment in rural Alaska would qualify as small businesses. We have no reason to believe that this rule will lead to a disproportionate distribution of benefits.

b. This rule will not cause a major increase in costs or prices for consumers; individual industries; Federal, State, or local government agencies; or geographic regions. This rule does not deal with traded commodities and, therefore, does not have an impact on prices for consumers.

c. This rule does not have significant adverse effects on competition, employment, investment, productivity, innovation, or the ability of U.S.-based enterprises to compete with foreign-based enterprises. This rule deals with the harvesting of wildlife for personal consumption. It does not regulate the marketplace in any way to generate effects on the economy or the ability of businesses to compete.

Unfunded Mandates Reform Act

We have determined and certified pursuant to the Unfunded Mandates Reform Act (2 U.S.C. 1501 *et seq.*) that this rule will not impose a cost of $100 million or more in any given year on local, State, or tribal governments or private entities. A statement containing the information required by this Act is therefore not necessary. Participation on regional management bodies and the Co-management Council will require travel expenses for some Alaska Native organizations and local governments. In addition, they will assume some expenses related to coordinating involvement of village councils in the regulatory process. Total coordination and travel expenses for all Alaska Native organizations are estimated to be less than $300,000 per year. In the Notice of Decision (65 FR 16405, March 28, 2000) we identified 12 partner organizations (Alaska Native non-profits and local governments) to be responsible for administering the regional programs. The Alaska Department of Fish and Game will also incur expenses for travel to Co-management Council and regional management body's meetings. In addition, the State of Alaska will be required to provide technical staff support to each of the regional management bodies and to the Co-management Council. Expenses for the State's involvement may exceed $100,000 per year, but should not exceed $150,000 per year. When funding permits, we make annual grant agreements available to the partner organizations and the Alaska Department of Fish and Game to help offset their expenses.

Paperwork Reduction Act

This rule has been examined under the Paperwork Reduction Act of 1995 and has been found to contain no information collection requirements. We have, however, received OMB approval of associated voluntary annual household surveys used to determine levels of subsistence take. The OMB control number for the information collection is 1018–0124, which expires on October 31, 2006. An agency may not conduct or sponsor, and a person is not required to respond to, a collection of information unless it displays a currently valid OMB control number.

Federalism Effects

As discussed in the Executive Order 12866 and Unfunded Mandates Reform Act sections above, this rule does not have sufficient federalism implications to warrant the preparation of a Federalism Assessment under Executive Order 13132. We worked with the State of Alaska on development of these regulations.

Civil Justice Reform—Executive Order 12988

In accordance with Executive Order 12988, the Office of the Solicitor has determined that the rule does not unduly burden the judicial system and that it meets the requirements of Section 3 of the Order.

Takings Implication Assessment

This rule is not specific to particular land ownership, but applies to the harvesting of migratory bird resources throughout Alaska. Therefore, in accordance with Executive Order 12630, this rule does not have significant takings implications.

Government-to-Government Relations With Native American Tribal Governments

In accordance with the President's memorandum of April 29, 1994, ''Government-to-Government Relations With Native American Tribal Governments'' (59 FR 22951), and Executive Order 13175 (65 FR 67249,

November 6, 2000), concerning consultation and coordination with Indian Tribal Governments, we have consulted with Alaska tribes and evaluated the rule for possible effects on tribes or trust resources, and have determined that there are no significant effects. The rule will legally recognize the subsistence harvest of migratory birds and their eggs for tribal members, as well as for other indigenous inhabitants.

Endangered Species Act Consideration

Prior to issuance of annual spring and summer subsistence regulations, we will consider provisions of the Endangered Species Act of 1973, as amended, (16 U.S.C. 1531–1543; hereinafter the Act) to ensure that harvesting is not likely to jeopardize the continued existence of any species designated as endangered or threatened, or modify or destroy its critical habitats and that it is consistent with conservation programs for those species. Consultations under Section 7 of this Act conducted in connection with the environmental assessment for the annual subsistence take regulations may cause us to change these regulations. Our biological opinion resulting from the Section 7 consultation is a public document available for public inspection at the address indicated under the caption **ADDRESSES**.

National Environmental Policy Act Consideration

The annual regulations and options were considered in the Environmental Assessment, ''Managing Migratory Bird Subsistence Hunting in Alaska: Hunting Regulations for the First Legal Spring/Summer Harvest in 2005,'' issued August 15, 2004. Copies are available from the address indicated under the caption **ADDRESSES**.

Energy Supply, Distribution, or Use (Executive Order 13211)

On May 18, 2001, the President issued Executive Order 13211 on regulations that significantly affect energy supply, distribution and use. Executive Order 13211 requires agencies to prepare Statements of Energy Effects when undertaking certain actions. Because this rule only allows for traditional subsistence harvest and improves conservation of migratory birds by allowing effective regulation of this harvest, it is not a significant regulatory action under Executive Order 12866. Consequently it is not expected to significantly affect energy supplies, distribution and use. Therefore, this action is not a significant energy action under Executive Order 13211 and no Statement of Energy Effects is required.

List of Subjects in 50 CFR Part 92

Exports, Hunting, Imports, Reporting and recordkeeping requirements, Subsistence, Treaties, Wildlife.

For the reasons set out in the preamble, we propose to amend title 50, chapter I, subchapter G, of the Code of Federal Regulations as follows:

PART 92—MIGRATORY BIRD SUBSISTENCE HARVEST IN ALASKA

1. The authority citation for part 92 continues to read as follows:

Authority: 16 U.S.C. 703–712.

Subpart A—General Provisions

2. In subpart A, amend § 92.5 by revising paragraph (a)(2) introductory text and adding paragraph (a)(3) to read as follows:

§ 92.5 Who is eligible to participate?

* * * * *

(a) * * *

(2) Based on petitions for inclusion recommended by the Co-management Council in 2003, the Service added the following communities to the included areas under this part starting in the 2004 harvest season:

* * * * *

(3) Based on petitions for inclusion recommended by the Co-management Council in 2004, the Service is adding the following communities to the included areas under this part starting in the 2005 harvest season:

(i) Southeast Region—Craig, Hydaburg and Yakutat.

(ii) [Reserved.]

Subpart C—General Regulations Governing Subsistence Harvest

3. In subpart C, amend § 92.20 by revising paragraph (d) to read as follows:

§ 92.20 Methods and means.

* * * * *

(d) Taking waterfowl and other species using live birds as decoys, except for auklets on Diomede and St. Lawrence islands (Use of live birds as decoys is a customary and traditional means of harvesting auklets on Diomede and St. Lawrence islands.);

* * * * *

Subpart D—Annual Regulations Governing Subsistence Harvest

4. In Subpart D, add §§ 92.31 through 92.33 to read as follows:

§ 92.31 Migratory bird species not authorized for subsistence harvest.

(a) You may not harvest birds or gather eggs from the following species:

(1) Spectacled Eider *Somateria fischeri*).

(2) Steller's Eider *Polysticta stelleri*).

(3) Emperor Goose *Chen canagica*).

(4) Aleutian Cackling Goose *Branta hutchinsii leucopareia*)—Semidi Islands only.

(5) Tundra Swan *Cygnus columbianus*)—Units 9(D) and 10 only.

(6) Yellow-billed Loon *Gavia adamsii*)—except North Slope Region. (Requirements for harvest and reporting are described in § 92.33(g)(4).).

(b) In addition, you may not gather eggs from the following species:

(1) Cackling Goose *Branta hutchinsii minima*).

(2) Black Brant *Branta bernicla nigricans*)—in the Yukon/Kuskokwim Delta and North Slope regions only.

§ 92.32 Subsistence migratory bird species.

You may harvest birds or gather eggs from the following species, listed in taxonomic order, within all included regions. When birds are listed only to the species level, all subspecies existing in Alaska are open to harvest.

(a) Family Anatidae

(1) Greater White-fronted Goose (*Anser albifrons*).

(2) Snow Goose (*Chen caerulescens*).

(3) Black Brant (*Branta bernicla nigricans*)—except no egg gathering is permitted in the Yukon/Kuskokwim Delta and the North Slope regions.

(4) Taverner's Cackling Goose (*Branta hutchinsii taverneri*).

(5) Aleutian Cackling Goose (*Branta hutchinsii leucopareia*)—except in the Semidi Islands.

(6) Cackling Goose (*Branta hutchinsii minima*)—except no egg gathering is permitted.

(7) Lesser Canada Goose (*Branta canadensis parvipes*).

(8) Tundra Swan (*Cygnus columbianus*)—except in Units 9(D) and 10.

(9) Gadwall (*Anas strepera*).

(10) Eurasian Wigeon (*Anas penelope*).

(11) American Wigeon (*Anas americana*).

(12) Mallard (*Anas platyrhynchos*).

(13) Blue-winged Teal (*Anas discors*).

(14) Northern Shoveler (*Anas clypeata*).

(15) Northern Pintail (*Anas acuta*).

(16) Green-winged Teal (*Anas crecca*).

(17) Canvasback (*Aythya valisineria*).

(18) Redhead (*Aythya americana*).

(19) Ring-necked Duck (*Aythya collaris*).

(20) Greater Scaup (*Aythya marila*).

(21) Lesser Scaup (*Aythya affinis*).

(22) King Eider (*Somateria spectabilis*).

(23) Common Eider (*Somateria mollissima*).

(24) Harlequin Duck (*Histrionicus histrionicus*).

(25) Surf Scoter (*Melanitta perspicillata*).

(26) White-winged Scoter (*Melanitta fusca*).
(27) Black Scoter (*Melanitta nigra*).
(28) Long-tailed Duck (*Clangula hyemalis*).
(29) Bufflehead (*Bucephala albeola*).
(30) Common Goldeneye (*Bucephala clangula*).
(31) Barrow's Goldeneye (*Bucephala islandica*).
(32) Hooded Merganser (*Lophodytes cucullatus*).
(33) Common Merganser (*Mergus merganser*).
(34) Red-breasted Merganser (*Mergus serrator*).

(b) Family Gaviidae

(1) Red-throated Loon (*Gavia stellata*).
(2) Arctic Loon (*Gavia arctica*).
(3) Pacific Loon (*Gavia pacifica*).
(4) Common Loon (*Gavia immer*).
(5) Yellow-billed Loon (*Gavia adamsii*)—North Slope Region only. (Requirements for harvest and reporting are described in § 92.33(g)(4).).

(c) Family Podicipedidae

(1) Horned Grebe (*Podiceps auritus*).
(2) Red-necked Grebe (*Podiceps grisegena*).

(d) Family Procellariidae

(1) Northern Fulmar (*Fulmarus glacialis*).
(2) [Reserved].

(e) Family Phalacrocoracidae

(1) Double-crested Cormorant (*Phalacrocorax auritus*).
(2) Pelagic Cormorant (*Phalacrocorax pelagicus*).

(f) Family Gruidae

(1) Sandhill Crane (*Grus canadensis*).
(2) [Reserved].

(g) Family Charadriidae

(1) Black-bellied Plover (*Pluvialis squatarola*).
(2) Common Ringed Plover (*Charadrius hiaticula*).

(h) Family Haematopodidae

(1) Black Oystercatcher (*Haematopus bachmani*).
(2) [Reserved].

(i) Family Scolopacidae.

(1) Greater Yellowlegs (*Tringa melanoleuca*).
(2) Lesser Yellowlegs (*Tringa flavipes*).
(3) Spotted Sandpiper (*Actitis macularia*).
(4) Bar-tailed Godwit (*Limosa lapponica*).
(5) Ruddy Turnstone (*Arenaria interpres*).
(6) Semipalmated Sandpiper (*Calidris pusilla*).
(7) Western Sandpiper (*Calidris mauri*).
(8) Least Sandpiper (*Calidris minutilla*).
(9) Baird's Sandpiper (*Calidris bairdii*).
(10) Sharp-tailed Sandpiper (*Calidris acuminata*).
(11) Dunlin (*Calidris alpina*).
(12) Long-billed Dowitcher (*Limnodromus scolopaceus*).
(13) Common Snipe (*Gallinago gallinago*).
(14) Red-necked phalarope (*Phalaropus lobatus*).
(15) Red phalarope (*Phalaropus fulicaria*).

(j) Family Laridae.

(1) Pomarine Jaeger (*Stercorarius pomarinus*).
(2) Parasitic Jaeger (*Stercorarius parasiticus*).
(3) Long-tailed Jaeger (*Stercorarius longicaudus*).
(4) Bonaparte's Gull (*Larus philadelphia*).
(5) Mew Gull (*Larus canus*).
(6) Herring Gull (*Larus argentatus*).
(7) Slaty-backed Gull (*Larus schistisagus*).
(8) Glaucous-winged Gull (*Larus glaucescens*).
(9) Glaucous Gull (*Larus hyperboreus*).
(10) Sabine's Gull (*Xema sabini*).
(11) Black-legged Kittiwake (*Rissa tridactyla*).
(12) Red-legged Kittiwake (*Rissa brevirostris*).
(13) Ivory Gull (*Pagophila eburnea*).
(14) Arctic Tern (*Sterna paradisaea*).
(15) Aleutian Tern (*Sterna aleutica*).

(k) Family Alcidae

(1) Common Murre (*Uria aalge*).
(2) Thick-billed Murre (*Uria lomvia*).
(3) Black Guillemot (*Cepphus grylle*).
(4) Pigeon Guillemot (*Cepphus columba*).
(5) Cassin's Auklet (*Ptychoramphus aleuticus*).
(6) Parakeet Auklet (*Aethia psittacula*).
(7) Least Auklet (*Aethia pusilla*).
(8) Whiskered Auklet (*Aethia pygmaea*).
(9) Crested Auklet (*Aethia cristatella*).
(10) Rhinoceros Auklet (*Cerorhinca monocerata*).
(11) Horned Puffin (*Fratercula corniculata*).
(12) Tufted Puffin (*Fratercula cirrhata*).

(l) Family Strigidae

(1) Great Horned Owl (*Bubo scandiacus*).
(2) Snowy Owl (*Nyctea scandiaca*).

§ 92.33 Region-specific regulations.

The 2005 season dates for the eligible subsistence regions are as follows:

(a) Aleutian/Pribilof Islands Region.
(1) Northern Unit (Pribilof Islands):
(i) Season: April 2–June 30.
(ii) Closure: July 1–August 31.
(2) Central Unit (Aleut Region's eastern boundary on the Alaska Peninsula westward to and including Unalaska Island):
(i) Season: April 2–June 15 and July 16–August 31.
(ii) Closure: June 16–July 15.
(3) Western Unit (Umnak Island west to and including Attu Island):
(i) Season: April 2–July 15 and August 16–August 31.
(ii) Closure: July 16–August 15.
(b) Yukon/Kuskokwim Delta Region.
(1) Season: April 2—August 31.
(2) Closure: 30-day closure dates to be announced by the Alaska Regional Director or his designee, after consultation with local subsistence users and the region's Waterfowl Conservation Committee. This 30-day period will occur between June 1 and August 15 of each year. A press release announcing the actual closure dates will be forwarded to regional newspapers and radio and television stations and posted in village post offices and stores.
(c) Bristol Bay Region.
(1) Season: April 2–June 14 and July 16–August 31 (general season); April 2–July 15 for seabird egg gathering only.
(2) Closure: June 15–July 15 (general season); July 16–August 31 (seabird egg gathering).
(d) Bering Strait/Norton Sound Region.
(1) Stebbins/St. Michael Area (Point Romanof to Canal Point):
(i) Season: April 15–June 14 and July 16–August 31.
(ii) Closure: June 15–July 15.
(2) Remainder of the region:
(i) Season: April 2–June 14 and July 16–August 31 for waterfowl; April 2–July 19 and August 21–August 31 for all other birds.
(ii) Closure: June 15–July 15 for waterfowl; July 20–August 20 for all other birds.
(e) Kodiak Archipelago Region, except for the Kodiak Island roaded area, is open to the harvesting of migratory birds and their eggs. The closed area consists of all lands and waters (including exposed tidelands) east of a line extending from Crag Point in the north to the west end of Saltery Cove in the south and all lands and water south of a line extending from Termination Point along the north side of Cascade Lake extending to Anton Larson Bay. Waters adjacent to the closed area are closed to harvest within 500 feet from the water's edge. The offshore islands are open to harvest.
(1) Season: April 2–June 20 and July 22–August 31, egg gathering: May 1–June 20.
(2) Closure: June 21–July 21.
(f) Northwest Arctic Region.
(1) Season: April 2–August 31 (in general); waterfowl egg gathering May 20–June 9; seabird egg gathering July 3–July 12; molting/non-nesting waterfowl July 1–July 31.
(2) Closure: June 10–August 14, except for the taking of seabird eggs and molting/non-nesting waterfowl as provided in paragraph (f)(1) of this section.
(g) North Slope Region.
(1) Southern Unit (Southwestern North Slope regional boundary east to Peard Bay, everything west of the longitude line 158°30′ S and south of the latitude line 70°45′ E to west bank of the Ikpikpuk River, and everything south of the latitude line 69°45′ E between the west bank of the Ikpikpuk River to the east bank of Sagavinirktok River):
(i) Season: April 2–June 29 and July 30–August 31 for seabirds; April 2–June

19 and July 20–August 31 for all other birds.

(ii) Closure: June 30–July 29 for seabirds; June 20–July 19 for all other birds.

(2) Northern Unit (At Peard Bay, everything east of the longitude line 158°30′ S and north of the latitude line 70°45′ E to west bank of the Ikpikpuk River, and everything north of the latitude line 69°45′ E between the west bank of the Ikpikpuk River to the east bank of Sagavinirktok River):

(i) Season: April 6–June 6 and July 7–August 31 for king and common eiders and April 2–June 15 and July 16–August 31 for all other birds.

(ii) Closure: June 7–July 6 for king and common eiders and June 16–July 15 for all other birds.

(3) Eastern Unit (East of eastern bank of the Sagavanirktok River):

(i) Season: April 2–June 19 and July 20–August 31.

(ii) Closure: June 20–July 19.

(4) All Units: yellow-billed loons. Annually, up to 20 yellow-billed loons may be caught inadvertently in subsistence fishing nets in the North Slope Region and kept for subsistence use. Individuals must report each yellow-billed loon inadvertently caught while subsistence gill net fishing to the North Slope Borough Department of Wildlife Management by the end of the season.

(h) Interior Region.

(1) Season: April 2–June 14 and July 16–August 31; egg gathering May 1–June 14.

(2) Closure: June 15–July 15.

(i) Upper Copper River (Harvest Area: State of Alaska Game Management Units 11 and 13) (Eligible communities: Gulkana, Chitina, Tazlina, Copper Center, Gakona, Mentasta Lake, Chistochina and Cantwell).

(1) Season: April 15–May 26 and June 27–August 31.

(2) Closure: May 27–June 26.

(3) The Copper River Basin communities listed in this paragraph also documented traditional use harvesting birds in Unit 12, making them eligible to hunt in this unit using the seasons specified in paragraph (h)(i) of this section.

(j) Gulf of Alaska Region.

(1) Prince William Sound Area (Harvest area: Unit 6 [D]), (Eligible Chugach communities: Chenega Bay, Tatitlek).

(i) Season: April 2–May 31 and July 1–August 31.

(ii) Closure: June 1–30.

(2) Kachemak Bay Area (Harvest area: Unit 15[C] South of a line connecting the tip of Homer Spit to the mouth of Fox River) (Eligible Chugach Communities: Port Graham, Nanwalek).

(i) Season: April 2–May 31 and July 1–August 31.

(ii) Closure: June 1–30.

(k) Cook Inlet (Harvest area: portions of Unit 16[B] as specified in this paragraph (k).) (Eligible communities: Tyonek only).

(1) Season: April 2–May 31–That portion of Unit 16(B) south of the Skwentna River and west of the Yentna River and August 1–31–That portion of Unit 16(B) south of the Beluga River, Beluga Lake and the Triumvirate Glacier.

(2) Closure: June 1–July 31.

(l) Southeast Alaska

(1) Community of Hoonah (Harvest area: Lands in Icy Strait and Cross Sound, including Middle Pass Rock near the Inian Islands, Table Rock in Cross Sound and other traditional locations on the coast of Yakobi Island. The land and waters of Glacier Bay National Park remain closed to all subsistence harvesting [50 CFR 100.3]).

(i) Season: Glaucous-winged gull egg gathering only: May 15–June 30.

(ii) Closure: July 1–August 31.

(2) Communities of Craig and Hydaburg (Harvest area: small islands and adjacent shoreline of western Prince of Wales Island from Point Baker to Cape Chacon, but also including Coronation and Warren islands).

(i) Season: Glaucous-winged gull egg gathering only: May 15–June 30.

(ii) Closure: July 1–August 31.

(3) Community of Yakutat (Harvest area: Icy Bay [Icy Cape to Pt. Riou] and coastal lands and islands bordering the Gulf of Alaska from Pt. Manby southeast to and including Dry Bay.

(i) Season: Glaucous-winged gull egg gathering only: May 15–June 30.

(ii) Closure: July 1–August 31.

Dated: December 10, 2004.

Craig Manson,

Assistant Secretary for Fish and Wildlife and Parks.

[FR Doc. 04–27776 Filed 12–17–04; 8:45 am]

BILLING CODE 4310–55–P

Federal Register

Monday,
December 20, 2004

Part VII

The President

Proclamation 7855—60th Anniversary of the Battle of the Bulge, 2004

Federal Register
Vol. 69, No. 243
Monday, December 20, 2004

Presidential Documents

Title 3—

The President

Proclamation 7855 of December 15, 2004

60th Anniversary of the Battle of the Bulge, 2004

By the President of the United States of America

A Proclamation

Sixty years ago, more than 600,000 American soldiers fought at the Battle of the Bulge in the Ardennes Forest region of Belgium and Luxembourg. What began as a German surprise attack on December 16, 1944, became the largest land battle involving U.S. troops in World War II and ended with an Allied victory on January 25, 1945. By the end of the battle, there were 81,000 American casualties, including approximately 19,000 who had sacrificed their lives. This formidable stand was a turning point in the war and was critical to the defeat of Nazi Germany and the liberation of Europe from tyranny.

Americans continue to be inspired by the valor and integrity of those who fought and those who died at the Battle of the Bulge. We recognize these brave individuals and pay special tribute to all the veterans of World War II. When it mattered most, an entire generation of Americans showed the finest qualities of our Nation and humanity. Today, as we wage a war on terrorism and defend freedom, our service men and women follow and uphold this great tradition of achievement and courage. Just like their parents and grandparents, the men and women of this generation of our military have answered the call to help advance peace and democracy and keep the American people safe.

On the 60th anniversary of one of the fiercest battles of World War II, our Nation honors the veterans who share with us the story of this epic struggle and all of the brave Americans who fought in the Battle of the Bulge.

NOW, THEREFORE, I, GEORGE W. BUSH, President of the United States of America, by virtue of the authority vested in me by the Constitution and laws of the United States, do hereby urge all Americans to observe the 60th Anniversary of the Battle of the Bulge. I call upon all Americans to observe this occasion with appropriate activities, ceremonies, and programs designed to honor those who served and sacrificed to liberate Europe and defend America's freedom and security.

IN WITNESS WHEREOF, I have hereunto set my hand this fifteenth day of December, in the year of our Lord two thousand four, and of the Independence of the United States of America the two hundred and twenty-ninth.

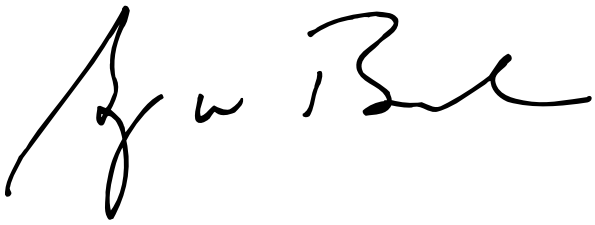

[FR Doc. 04–27944
Filed 12–17–04; 9:18 am]
Billing code 3195–01–P

Reader Aids

Federal Register

Vol. 69, No. 243

Monday, December 20, 2004

CUSTOMER SERVICE AND INFORMATION

Federal Register/Code of Federal Regulations	
General Information, indexes and other finding aids	**202–741–6000**
Laws	**741–6000**
Presidential Documents	
Executive orders and proclamations	**741–6000**
The United States Government Manual	**741–6000**
Other Services	
Electronic and on-line services (voice)	**741–6020**
Privacy Act Compilation	**741–6064**
Public Laws Update Service (numbers, dates, etc.)	**741–6043**
TTY for the deaf-and-hard-of-hearing	**741–6086**

ELECTRONIC RESEARCH

World Wide Web

Full text of the daily Federal Register, CFR and other publications is located at: **http://www.gpoaccess.gov/nara/index.html**

Federal Register information and research tools, including Public Inspection List, indexes, and links to GPO Access are located at: **http://www.archives.gov/federal_register/**

E-mail

FEDREGTOC-L (Federal Register Table of Contents LISTSERV) is an open e-mail service that provides subscribers with a digital form of the Federal Register Table of Contents. The digital form of the Federal Register Table of Contents includes HTML and PDF links to the full text of each document.

To join or leave, go to **http://listserv.access.gpo.gov** and select *Online mailing list archives, FEDREGTOC-L, Join or leave the list (or change settings);* then follow the instructions.

PENS (Public Law Electronic Notification Service) is an e-mail service that notifies subscribers of recently enacted laws.

To subscribe, go to **http://listserv.gsa.gov/archives/publaws-l.html** and select *Join or leave the list (or change settings);* then follow the instructions.

FEDREGTOC-L and **PENS** are mailing lists only. We cannot respond to specific inquiries.

Reference questions. Send questions and comments about the Federal Register system to: **fedreg.info@nara.gov**

The Federal Register staff cannot interpret specific documents or regulations.

FEDERAL REGISTER PAGES AND DATE, DECEMBER

69805–70050 1
70051–70178 2
70179–70350 3
70351–70536 6
70537–70870 7
70871–71338 8
71339–71690 9
71691–72108 10
72109–74404 13
74405–74946 14
74947–75222 15
75223–75450 16
75451–75818 17
75819–76372 20

CFR PARTS AFFECTED DURING DECEMBER

At the end of each month, the Office of the Federal Register publishes separately a List of CFR Sections Affected (LSA), which lists parts and sections affected by documents published since the revision date of each title.

3 CFR

Proclamations:
7850 70351
7851 70353
7852 71689
7853 74945
7854 74947
7855 76371

Executive Orders:
12473 (Amended by EO 13365) 71333
13286 (See EO 13362) 70173
13289 (See EO 13363) 70175
13303 (Amended by EO 13364) 70177
13315 (See EO 13364) 70177
13350 (See EO 13364) 70177
13362 70173
13363 70175
13364 70177
13365 71333

Administrative Orders:
Memorandums:
Memorandum of October 21, 2004 70349
Memorandum of December 8, 2004 74935
Memorandum of December 8, 2004 74937
Memorandum of December 8, 2004 74939
Memorandum of December 8, 2004 74941
Presidential Determinations:
No. 2005–07 of November 29, 2004 72109
No. 2005–08 of November 29, 2004 74931
No. 2005–09 of December 6, 2004 74933

4 CFR

Proposed Rules:
21 75878

5 CFR

317 70355
352 70355
359 70355
451 70355
530 70355
531 ..... 70355, 75451
534 70355
575 70355
841 69805
842 69805
843 69805

6 CFR

Proposed Rules:
5 70402

7 CFR

210 ..... 70871, 70872
220 70872
319 71691
354 71660
457 74405
905 70874
1005 71697
1006 71697
1007 71697
1464 70367
1775 70877
1806 75454
1822 75454
1902 75454
1925 75454
1930 75454
1940 75454
1942 75454
1944 75454
1951 ..... 70883, 75454
1955 75454
1956 75454
1965 75454
3560 75454
3565 75454

Proposed Rules:
319 71736
500 75880
929 69996
930 71744
983 71749
989 71753

9 CFR

166 70179
317 74405
381 74405
430 70051

10 CFR

25 74949
95 74949

Proposed Rules:
25 75007
95 75007

11 CFR

Proposed Rules:
300 71388

12 CFR

201 75819

Proposed Rules:
226 70925

13 CFR

121 70180
125 75820
Proposed Rules:
121 70197

14 CFR

23 ....70885, 74407
39 ....69807, 69810, 70368, 70537, 70539, 71339, 71340, 71342, 71344, 71347, 71349, 71351, 71353, 74411, 74412, 75223, 75225, 75228, 75231, 75233, 75236, 75826, 75830, 75833
71 ....70053, 70185, 70371, 70372, 70541, 70542, 71701, 71702, 72111, 72112, 74953, 74954, 74955, 75454, 76042
73 ....70887, 72113
91 74413
95 74413
97 74415
121 75835
Proposed Rules:
39 ....69829, 69832, 69834, 69836, 69838, 69842, 69844, 70202, 70204, 70564, 70566, 70568, 70571, 70574, 70936, 70938, 72134, 72136, 74461, 74463, 74465, 75267, 75270, 75273, 75275, 75277, 75280, 75282
61 74898
63 74898
65 74898
67 74898
71 ....70208, 71756, 75490, 75491
91 74898
121 74898
135 74898

15 CFR

6 74416
732 71356
734 71356
740 71356
742 71356
744 71356
750 69814
772 71356
806 70543
Proposed Rules:
710 70754
711 70754
712 70754
713 70754
714 70754
715 70754
716 70754
717 70754
718 70754
719 70754
720 70754
721 70754
722 70754
723 70754
724 70754
725 70754
726 70754
727 70754
728 70754
729 70754

17 CFR

240 70852
248 71322
275 72054
279 72054
Proposed Rules:
228 75774
229 75774
230 75774
240 ....71126, 71256, 75774
242 ....71126, 75774
249 71126

18 CFR

11 71364
Proposed Rules:
Ch. 1 70077

21 CFR

1 ....71562, 71655
10 74418
11 71562
510 70053
520 ....70053, 74418
522 ....70054, 70055
558 70056
880 70702
1310 74957
Proposed Rules:
165 70082
1301 70576

22 CFR

122 70888
129 70888
Proposed Rules:
226 75885

23 CFR

650 74419
655 69815

24 CFR

200 74894
202 75802
206 75204
570 70864
Proposed Rules:
200 75812
206 70244
970 75188
2004 70868
3280 70016

25 CFR

Proposed Rules:
542 69847

26 CFR

1 ....70547, 70550, 75455
25 70547
31 ....69819, 70547
53 70547
55 70547
156 70547
301 70547
602 ....70547, 70550
Proposed Rules:
1 ....70578, 71757, 75492
26 70404
301 71757

27 CFR

9 ....70889, 71372

28 CFR

16 72114
906 75243

29 CFR

570 75382
579 75382
580 75382
1926 70373
2590 75798
4011 69820
4022 ....69820, 74973
4044 ....69821, 74973
Proposed Rules:
1 75408
4 75408
1952 75436

30 CFR

18 70752
917 75835
938 ....71528, 71551

31 CFR

10 75839
103 74439
515 75468
538 75468
560 75468
Proposed Rules:
10 75887

32 CFR

635 75245
Proposed Rules:
637 75287

33 CFR

100 ....70551, 70552
117 ....70057, 70059, 70373, 71704, 71706, 74441, 74975, 75472, 75845
165 ....70374, 71708, 71709, 74442
Proposed Rules:
100 70578
110 ....71758, 75009
117 ....70091, 70209, 72138, 75011, 75013, 75493
165 ....70211, 71758, 75009

35 CFR

Ch. I 71375

36 CFR

13 70061
242 70074
1228 74976
Proposed Rules:
242 70940

37 CFR

201 70377
253 69822

38 CFR

21 74977

40 CFR

9 ....70552, 75472
52 ....69823, 70893, 70895, 71375, 71712, 72115, 72118, 75473, 75478, 75847
63 74979
70 75478
81 75847
180 ....70897, 71714
228 75256
271 ....70898, 74444
300 ....74448, 75847
712 70552
Proposed Rules:
52 ....69863, 70944, 70945, 71390, 71764, 75495
60 ....69864, 71472
63 ....69864, 75015
70 75495
93 72140
271 ....70946, 74467
272 71391
300 ....74467, 75891
720 75496
721 70404

41 CFR

Proposed Rules:
51-2 70214
51-3 70214
51-4 70214

42 CFR

1003 74451
Proposed Rules:
1001 71766

43 CFR

44 70557
1880 70557

44 CFR

64 ....70377, 75481
65 ....70185, 71718, 72128, 75483
67 ....70191, 70192, 71721, 72131, 75484
Proposed Rules:
67 ....72156, 72158, 75496, 75499

45 CFR

Proposed Rules:
650 71395

46 CFR

310 74454
531 75850

47 CFR

0 70316
1 ....70378, 72020, 75144
2 ....71380, 72020
4 70316
11 72020
15 ....71380, 72020
18 70562
21 72020
22 75144
24 75144
27 ....70378, 72020, 75144
54 74985
63 70316
64 71383
73 ....71384, 71385, 71386, 71387, 72020, 74988, 75860, 75861
74 ....70378, 72020
76 72020
78 72020
79 72020

90.....70378, 75144
101.....70378, 72020
Proposed Rules:
1.....72046, 75174
22.....75174
24.....75174
27.....72046, 75174
73 .....71396, 75016, 75017
90.....74174

48 CFR

Ch. 1.....76340, 76358
Ch. 2.....74995
2 .....76341, 76347, 76350, 76352
4.....76341
9.....76347
11.....76358
12.....76350
13.....76350
14.....76341
15.....76341, 76350
19.....76355
22.....76347, 76352
28.....76347
41.....76358
42.....76356
44.....76347, 76358
51.....76358
52 .....76341, 76347, 76352, 76358
203.....74989
206.....74990
209.....74989
212.....74991
213.....74991
217.....74992
219.....74995
225.....74991
236.....75000
237.....75000
252.....74989, 74991
909.....75001
970.....75001
Ch. 35.....75266
Proposed Rules:
901.....75017
970.....75017

49 CFR

171 .....70902, 75208, 76044
172.....75208, 76044
173 .....70902, 75208, 76044
174.....70902
175 .....70902, 75208, 76044
176.....70902, 76044
177.....70902
178.....70902, 76044
180.....76044
219.....72133
571 .....70904, 74848, 75486, 76298
585.....70904
586.....70904
589.....70904
590.....70904
596.....70904
597.....70904
Proposed Rules:
571.....75020
572.....70947
1507.....71767

50 CFR

14.....70379
17.....70382, 71723
100.....70074
222.....69826
223.....69826
229.....75862
300.....71731
622.....70196
635 .....70396, 71732, 71735
648 .....70919, 70923, 75864
679 .....69828, 70924, 74455, 75004, 75005, 75865
Proposed Rules:
17 .....69878, 70412, 70580, 70971, 71284, 72161, 74468, 75608
20.....71770
21.....75892
92.....76362
100.....70940
226.....71880, 74572
229.....70094
635.....71771
648.....70414
660.....70973
679 .....70589, 70605, 70974

REMINDERS

The items in this list were editorially compiled as an aid to Federal Register users. Inclusion or exclusion from this list has no legal significance.

RULES GOING INTO EFFECT DECEMBER 20, 2004

COMMODITY FUTURES TRADING COMMISSION

Confidential information and commission records and information; published 11-18-04

DEFENSE DEPARTMENT

Federal Acquisition Regulation (FAR):
- Employee rights concerning payment of union dues or fees; published 12-20-04
- Technical amendments; published 12-20-04

ENERGY DEPARTMENT

Energy Efficiency and Renewable Energy Office

Commercial and industrial equipment; energy efficiency program:
- Test procedures and efficiency standards—
  - Commercial air conditioners and heat pumps; published 10-21-04
  - Water heaters, hot water supply boilers, and unfired hot water storage tanks; published 10-21-04

ENVIRONMENTAL PROTECTION AGENCY

Air quality implementation plans; approval and promulgation; various States; air quality planning purposes; designation of areas:
- West Virginia; withdrawn; published 12-20-04

FEDERAL COMMUNICATIONS COMMISSION

Digital television stations; table of assignments:
- Alabama; published 11-12-04
- California; published 11-15-04
- Montana; published 11-12-04

Radio stations; table of assignments:
- California; published 11-24-04

FEDERAL RESERVE SYSTEM

Extensions of credit by Federal Reserve Banks (Regulation A):
- Primary and secondary credit—
  - Rates; increase approval; published 12-20-04

GENERAL SERVICES ADMINISTRATION

Federal Acquisition Regulation (FAR):
- Employee rights concerning payment of union dues or fees; published 12-20-04
- Technical amendments; published 12-20-04

INTERIOR DEPARTMENT

Surface Mining Reclamation and Enforcement Office

Permanent program and abandoned mine land reclamation plan submissions:
- Kentucky; published 12-20-04

NATIONAL AERONAUTICS AND SPACE ADMINISTRATION

Federal Acquisition Regulation (FAR):
- Employee rights concerning payment of union dues or fees; published 12-20-04
- Technical amendments; published 12-20-04

SMALL BUSINESS ADMINISTRATION

Government contracting programs:
- Subcontracting; published 12-20-04

TRANSPORTATION DEPARTMENT

Federal Aviation Administration

Airworthiness directives:
- Airbus; published 11-15-04
- Boeing; published 11-15-04
- Empresa Brasileira de Aeronautica, S.A. (EMBRAER); published 11-15-04
- McDonnell Douglas; published 11-15-04

TRANSPORTATION DEPARTMENT

National Highway Traffic Safety Administration

Motor vehicle safety standards:
- Rear impact protection; road construction controlled horizontal discharge semitrailers; exclusion from standard; published 11-19-04

TREASURY DEPARTMENT

Practice and procedure:
- Practice before Internal Revenue Service; published 12-20-04

COMMENTS DUE NEXT WEEK

AGRICULTURE DEPARTMENT

Agricultural Marketing Service

Cotton classing, testing and standards:
- Classification services to growers; 2004 user fees; Open for comments until further notice; published 5-28-04 [FR 04-12138]

Irish potatoes grown in—
- Washington; comments due by 12-27-04; published 11-26-04 [FR 04-26124]

Olives grown in—
- California; comments due by 12-27-04; published 10-28-04 [FR 04-24089]

Walnuts grown in—
- California; comments due by 12-28-04; published 10-29-04 [FR 04-24160]

AGRICULTURE DEPARTMENT

Animal and Plant Health Inspection Service

Noxious weeds:
- Caulerpa; comments due by 12-27-04; published 10-26-04 [FR 04-23921]

Plant-related quarantine, foreign:
- Import regulations; requests for changes; submission requirements; comments due by 12-27-04; published 10-28-04 [FR 04-24150]

AGRICULTURE DEPARTMENT

Farm Service Agency

Multi-family housing programs:
- Direct multi-family housing loans and grants; comments due by 12-27-04; published 11-26-04 [FR 04-25599]

AGRICULTURE DEPARTMENT

Rural Business-Cooperative Service

Multi-family housing programs:
- Direct multi-family housing loans and grants; comments due by 12-27-04; published 11-26-04 [FR 04-25599]

AGRICULTURE DEPARTMENT

Rural Housing Service

Multi-family housing programs:
- Direct multi-family housing loans and grants; comments due by 12-27-04; published 11-26-04 [FR 04-25599]

AGRICULTURE DEPARTMENT

Rural Utilities Service

Multi-family housing programs:
- Direct multi-family housing loans and grants; comments due by 12-27-04; published 11-26-04 [FR 04-25599]

COMMERCE DEPARTMENT

National Oceanic and Atmospheric Administration

Fishery conservation and management:
- Alaska; fisheries of Exclusive Economic Zone—
  - Bering Sea and Aleutian Islands groundfish; comments due by 12-29-04; published 12-15-04 [FR 04-27432]
  - Western Alaska Community Development Quota Program; comments due by 12-27-04; published 11-26-04 [FR 04-26177]

COURT SERVICES AND OFFENDER SUPERVISION AGENCY FOR THE DISTRICT OF COLUMBIA

Semi-annual agenda; Open for comments until further notice; published 12-22-03 [FR 03-25121]

DEFENSE DEPARTMENT

Acquisition regulations:
- Pilot Mentor-Protege Program; Open for comments until further notice; published 12-15-04 [FR 04-27351]

ENERGY DEPARTMENT

Meetings:
- Environmental Management Site-Specific Advisory Board—
  - Oak Ridge Reservation, TN; Open for comments until further notice; published 11-19-04 [FR 04-25693]

ENERGY DEPARTMENT

Energy Efficiency and Renewable Energy Office

Commercial and industrial equipment; energy efficiency program:
- Test procedures and efficiency standards—
  - Commercial packaged boilers; Open for comments until further notice; published 10-21-04 [FR 04-17730]

ENERGY DEPARTMENT

Federal Energy Regulatory Commission

Electric rate and corporate regulation filings:

Virginia Electric & Power Co. et al.; Open for comments until further notice; published 10-1-03 [FR 03-24818]

ENVIRONMENTAL PROTECTION AGENCY

Air quality implementation plans; approval and promulgation; various States; air quality planning purposes; designation of areas:

Washington; comments due by 12-29-04; published 11-29-04 [FR 04-26295]

Air quality implementation plans; approval and promulgation; various States:

Indiana; comments due by 12-30-04; published 11-30-04 [FR 04-26400]

Environmental statements; availability, etc.:

Coastal nonpoint pollution control program—

Minnesota and Texas; Open for comments until further notice; published 10-16-03 [FR 03-26087]

Pesticides; tolerances in food, animal feeds, and raw agricultural commodities:

Deltamethrin; comments due by 12-27-04; published 10-27-04 [FR 04-24040]

Pyraclostrobin; comments due by 12-28-04; published 10-29-04 [FR 04-24247]

Radiation protection programs:

Transuranic radioactive waste for disposal at Waste Isolation Pilot Plant; waste characterization program documents; availability—

Hanford Site, Plutonium Finishing Plant, WA; comments due by 12-30-04; published 11-30-04 [FR 04-26480]

Water pollution control:

National Pollutant Discharge Elimination System—

Concentrated animal feeding operations in New Mexico and Oklahoma; general permit for discharges; Open for comments until further notice; published 12-7-04 [FR 04-26817]

Water pollution; effluent guidelines for point source categories:

Meat and poultry products processing facilities; Open for comments until further notice; published 9-8-04 [FR 04-12017]

FEDERAL COMMUNICATIONS COMMISSION

Common carrier services:

Interconnection—

Incumbent local exchange carriers; reclassification from competitive local exchange carriers; comments due by 12-30-04; published 11-30-04 [FR 04-26385]

Radio services, special:

Maritime services—

Automatic Identification Systems; electromagnetic frequency identification; comments due by 12-30-04; published 11-15-04 [FR 04-25289]

Radio stations; table of assignments:

New Jersey and Texas; comments due by 12-27-04; published 11-22-04 [FR 04-25808]

Ohio and Kentucky; comments due by 12-27-04; published 11-22-04 [FR 04-25807]

HEALTH AND HUMAN SERVICES DEPARTMENT

Food and Drug Administration

Environmental impact considerations;

Humanitarian device exemption; categorical exclusion; comments due by 12-27-04; published 11-24-04 [FR 04-25974]

Medical devices:

Immunology and microbiology devices—

Hepatitis A virus serological assays; reclassification; comments due by 12-29-04; published 9-30-04 [FR 04-22009]

Reports and guidance documents; availability, etc.:

Evaluating safety of antimicrobial new animal drugs with regard to their microbiological effects on bacteria of human health concern; Open for comments until further notice; published 10-27-03 [FR 03-27113]

Medical devices—

Dental noble metal alloys and base metal alloys; Class II special controls; Open for comments until further notice; published 8-23-04 [FR 04-19179]

HOMELAND SECURITY DEPARTMENT

Coast Guard

Anchorage regulations:

Maryland; Open for comments until further notice; published 1-14-04 [FR 04-00749]

Virginia; comments due by 12-27-04; published 9-27-04 [FR 04-21523]

Drawbridge operations:

Florida; comments due by 12-30-04; published 11-30-04 [FR 04-26339]

New Jersey; comments due by 12-28-04; published 10-29-04 [FR 04-24255]

Ports and waterways safety:

Buzzards Bay, MA; regulated navigation area; comments due by 12-27-04; published 10-26-04 [FR 04-23963]

HOMELAND SECURITY DEPARTMENT

Transportation Security Administration

Maritime and land transportation security:

Commercial drivers licenses; hazardous materials endorsement; security threat assessment; comments due by 12-27-04; published 11-24-04 [FR 04-26066]

HOMELAND SECURITY DEPARTMENT

U.S. Citizenship and Immigration Services

Immigration:

Full costs recovery; appeal and motion fees adjustment; comments due by 12-30-04; published 11-30-04 [FR 04-26370]

INTERIOR DEPARTMENT

Fish and Wildlife Service

Endangered and threatened species permit applications

Recovery plans—

Paiute cutthroat trout; Open for comments until further notice; published 9-10-04 [FR 04-20517]

LABOR DEPARTMENT

Occupational Safety and Health Administration

Occupational safety and health standards:

National consensus standards and industry standards; clarification and deletion of outdated references; comments due by 12-27-04; published 11-24-04 [FR 04-26045]

National consensus standards; update; comments due by 12-27-04; published 11-24-04 [FR 04-26047]

NUCLEAR REGULATORY COMMISSION

Environmental statements; availability, etc.:

Fort Wayne State Developmental Center; Open for comments until further notice; published 5-10-04 [FR 04-10516]

SMALL BUSINESS ADMINISTRATION

Disaster loan areas:

Maine; Open for comments until further notice; published 2-17-04 [FR 04-03374]

OFFICE OF UNITED STATES TRADE REPRESENTATIVE

Trade Representative, Office of United States

Generalized System of Preferences:

2003 Annual Product Review, 2002 Annual Country Practices Review, and previously deferred product decisions; petitions disposition; Open for comments until further notice; published 7-6-04 [FR 04-15361]

TRANSPORTATION DEPARTMENT

Federal Aviation Administration

Airworthiness directives:

BAE Systems (Operations) Ltd.; comments due by 12-27-04; published 11-24-04 [FR 04-26032]

Boeing; comments due by 12-27-04; published 10-27-04 [FR 04-23924]

Empresa Brasileira de Aeronautica S.A. (EMBRAER); comments due by 12-27-04; published 11-24-04 [FR 04-26030]

General Electric Co.; comments due by 12-27-04; published 10-27-04 [FR 04-24035]

Pacific Aerospace Corp., Ltd.; comments due by 12-27-04; published 11-22-04 [FR 04-25795]

Raytheon; comments due by 12-27-04; published 11-10-04 [FR 04-25033]

Rolls-Royce Ltd.; comments due by 12-28-04; published 10-29-04 [FR 04-24230]

Class E airspace; comments due by 12-27-04; published 11-16-04 [FR 04-25416]

TREASURY DEPARTMENT

Internal Revenue Service

Income taxes:

Labor and personal services; source of compensation

Public hearing; comments due by 12-27-04; published 12-7-04 [FR 04-26838]

VETERANS AFFAIRS DEPARTMENT

Adjudication; pensions, compensation, dependency, etc.:

Surviving spouse's rate; compensation payments for service-connected disability; indemnity compensation for non-service-connected deaths; comments due by 12-27-04; published 10-25-04 [FR 04-23488]

LIST OF PUBLIC LAWS

This is a continuing list of public bills from the current session of Congress which have become Federal laws. It may be used in conjunction with "P L U S" (Public Laws Update Service) on 202–741–6043. This list is also available online at *http://www.archives.gov/federal_register/public_laws/public_laws.html*.

The text of laws is not published in the **Federal Register** but may be ordered in "slip law" (individual pamphlet) form from the Superintendent of Documents, U.S. Government Printing Office, Washington, DC 20402 (phone, 202–512–1808). The text will also be made available on the Internet from GPO Access at *http://www.gpoaccess.gov/plaws/index.html*. Some laws may not yet be available.

H.R. 2655/P.L. 108–449

To amend and extend the Irish Peace Process Cultural and Training Program Act of 1998. (Dec. 10, 2004; 118 Stat. 3469)

H.R. 4302/P.L. 108–450

District of Columbia Mental Health Civil Commitment Modernization Act of 2004 (Dec. 10, 2004; 118 Stat. 3472)

S. 437/P.L. 108–451

Arizona Water Settlements Act (Dec. 10, 2004; 118 Stat. 3478)

S. 1466/P.L. 108–452

Alaska Land Transfer Acceleration Act (Dec. 10, 2004; 118 Stat. 3575)

S. 2192/P.L. 108–453

Cooperative Research and Technology Enhancement (CREATE) Act of 2004 (Dec. 10, 2004; 118 Stat. 3596)

S. 2486/P.L. 108–454

Veterans Benefits Improvement Act of 2004 (Dec. 10, 2004; 118 Stat. 3598)

S. 2873/P.L. 108–455

To extend the authority of the United States District Court for the Southern District of Iowa to hold court in Rock Island, Illinois. (Dec. 10, 2004; 118 Stat. 3628)

S. 3014/P.L. 108–456

To reauthorize the Harmful Algal Bloom and Hypoxia Research and Control Act of 1998, and for other purposes. (Dec. 10, 2004; 118 Stat. 3630)

Last List December 13, 2004

Public Laws Electronic Notification Service (PENS)

PENS is a free electronic mail notification service of newly enacted public laws. To subscribe, go to *http://listserv.gsa.gov/archives/publaws-l.html*

Note: This service is strictly for E-mail notification of new laws. The text of laws is not available through this service. **PENS** cannot respond to specific inquiries sent to this address.

CFR CHECKLIST

This checklist, prepared by the Office of the Federal Register, is published weekly. It is arranged in the order of CFR titles, stock numbers, prices, and revision dates.

An asterisk (*) precedes each entry that has been issued since last week and which is now available for sale at the Government Printing Office.

A checklist of current CFR volumes comprising a complete CFR set, also appears in the latest issue of the LSA (List of CFR Sections Affected), which is revised monthly.

The CFR is available free on-line through the Government Printing Office's GPO Access Service at http://www.access.gpo.gov/nara/cfr/index.html. For information about GPO Access call the GPO User Support Team at 1-888-293-6498 (toll free) or 202-512-1530.

The annual rate for subscription to all revised paper volumes is $1195.00 domestic, $298.75 additional for foreign mailing.

Mail orders to the Superintendent of Documents, Attn: New Orders, P.O. Box 371954, Pittsburgh, PA 15250–7954. All orders must be accompanied by remittance (check, money order, GPO Deposit Account, VISA, Master Card, or Discover). Charge orders may be telephoned to the GPO Order Desk, Monday through Friday, at **(202) 512–1800** from 8:00 a.m. to 4:00 p.m. eastern time, or FAX your charge orders to **(202) 512-2250**.

Title	Stock Number	Price	Revision Date
1, 2 (2 Reserved)	(869–052–00001–9)	9.00	[4] Jan. 1, 2004
3 (2003 Compilation and Parts 100 and 101)	(869–052–00002–7)	35.00	[1] Jan. 1, 2004
4	(869–052–00003–5)	10.00	Jan. 1, 2004
5 Parts:			
1–699	(869–052–00004–3)	60.00	Jan. 1, 2004
700–1199	(869–052–00005–1)	50.00	Jan. 1, 2004
1200–End	(869–052–00006–0)	61.00	Jan. 1, 2004
6	(869–052–00007–8)	10.50	Jan. 1, 2004
7 Parts:			
1–26	(869–052–00008–6)	44.00	Jan. 1, 2004
27–52	(869–052–00009–4)	49.00	Jan. 1, 2004
53–209	(869–052–00010–8)	37.00	Jan. 1, 2004
210–299	(869–052–00011–6)	62.00	Jan. 1, 2004
300–399	(869–052–00012–4)	46.00	Jan. 1, 2004
400–699	(869–052–00013–2)	42.00	Jan. 1, 2004
700–899	(869–052–00014–1)	43.00	Jan. 1, 2004
900–999	(869–052–00015–9)	60.00	Jan. 1, 2004
1000–1199	(869–052–00016–7)	22.00	Jan. 1, 2004
1200–1599	(869–052–00017–5)	61.00	Jan. 1, 2004
1600–1899	(869–052–00018–3)	64.00	Jan. 1, 2004
1900–1939	(869–052–00019–1)	31.00	Jan. 1, 2004
1940–1949	(869–052–00020–5)	50.00	Jan. 1, 2004
1950–1999	(869–052–00021–3)	46.00	Jan. 1, 2004
2000–End	(869–052–00022–1)	50.00	Jan. 1, 2004
8	(869–052–00023–0)	63.00	Jan. 1, 2004
9 Parts:			
1–199	(869–052–00024–8)	61.00	Jan. 1, 2004
200–End	(869–052–00025–6)	58.00	Jan. 1, 2004
10 Parts:			
1–50	(869–052–00026–4)	61.00	Jan. 1, 2004
51–199	(869–052–00027–2)	58.00	Jan. 1, 2004
200–499	(869–052–00028–1)	46.00	Jan. 1, 2004
500–End	(869–052–00029–9)	62.00	Jan. 1, 2004
11	(869–052–00030–2)	41.00	Feb. 3, 2004
12 Parts:			
1–199	(869–052–00031–1)	34.00	Jan. 1, 2004
200–219	(869–052–00032–9)	37.00	Jan. 1, 2004
220–299	(869–052–00033–7)	61.00	Jan. 1, 2004
300–499	(869–052–00034–5)	47.00	Jan. 1, 2004
500–599	(869–052–00035–3)	39.00	Jan. 1, 2004
600–899	(869–052–00036–1)	56.00	Jan. 1, 2004
900–End	(869–052–00037–0)	50.00	Jan. 1, 2004
13	(869–052–00038–8)	55.00	Jan. 1, 2004
14 Parts:			
1–59	(869–052–00039–6)	63.00	Jan. 1, 2004
60–139	(869–052–00040–0)	61.00	Jan. 1, 2004
140–199	(869–052–00041–8)	30.00	Jan. 1, 2004
200–1199	(869–052–00042–6)	50.00	Jan. 1, 2004
1200–End	(869–052–00043–4)	45.00	Jan. 1, 2004
15 Parts:			
0–299	(869–052–00044–2)	40.00	Jan. 1, 2004
300–799	(869–052–00045–1)	60.00	Jan. 1, 2004
800–End	(869–052–00046–9)	42.00	Jan. 1, 2004
16 Parts:			
0–999	(869–052–00047–7)	50.00	Jan. 1, 2004
1000–End	(869–052–00048–5)	60.00	Jan. 1, 2004
17 Parts:			
1–199	(869–052–00050–7)	50.00	Apr. 1, 2004
200–239	(869–052–00051–5)	58.00	Apr. 1, 2004
240–End	(869–052–00052–3)	62.00	Apr. 1, 2004
18 Parts:			
1–399	(869–052–00053–1)	62.00	Apr. 1, 2004
400–End	(869–052–00054–0)	26.00	Apr. 1, 2004
19 Parts:			
1–140	(869–052–00055–8)	61.00	Apr. 1, 2004
141–199	(869–052–00056–6)	58.00	Apr. 1, 2004
200–End	(869–052–00057–4)	31.00	Apr. 1, 2004
20 Parts:			
1–399	(869–052–00058–2)	50.00	Apr. 1, 2004
400–499	(869–052–00059–1)	64.00	Apr. 1, 2004
500–End	(869–052–00060–9)	63.00	Apr. 1, 2004
21 Parts:			
1–99	(869–052–00061–2)	42.00	Apr. 1, 2004
100–169	(869–052–00062–1)	49.00	Apr. 1, 2004
170–199	(869–052–00063–9)	50.00	Apr. 1, 2004
200–299	(869–052–00064–7)	17.00	Apr. 1, 2004
300–499	(869–052–00065–5)	31.00	Apr. 1, 2004
500–599	(869–052–00066–3)	47.00	Apr. 1, 2004
600–799	(869–052–00067–1)	15.00	Apr. 1, 2004
800–1299	(869–052–00068–0)	58.00	Apr. 1, 2004
1300–End	(869–052–00069–8)	24.00	Apr. 1, 2004
22 Parts:			
1–299	(869–052–00070–1)	63.00	Apr. 1, 2004
300–End	(869–052–00071–0)	45.00	Apr. 1, 2004
23	(869–052–00072–8)	45.00	Apr. 1, 2004
24 Parts:			
0–199	(869–052–00073–6)	60.00	Apr. 1, 2004
200–499	(869–052–00074–4)	50.00	Apr. 1, 2004
500–699	(869–052–00075–2)	30.00	Apr. 1, 2004
700–1699	(869–052–00076–1)	61.00	Apr. 1, 2004
1700–End	(869–052–00077–9)	30.00	Apr. 1, 2004
25	(869–052–00078–7)	63.00	Apr. 1, 2004
26 Parts:			
§§ 1.0–1–1.60	(869–052–00079–5)	49.00	Apr. 1, 2004
§§ 1.61–1.169	(869–052–00080–9)	63.00	Apr. 1, 2004
§§ 1.170–1.300	(869–052–00081–7)	60.00	Apr. 1, 2004
§§ 1.301–1.400	(869–052–00082–5)	46.00	Apr. 1, 2004
§§ 1.401–1.440	(869–052–00083–3)	62.00	Apr. 1, 2004
§§ 1.441–1.500	(869–052–00084–1)	57.00	Apr. 1, 2004
§§ 1.501–1.640	(869–052–00085–0)	49.00	Apr. 1, 2004
§§ 1.641–1.850	(869–052–00086–8)	60.00	Apr. 1, 2004
§§ 1.851–1.907	(869–052–00087–6)	61.00	Apr. 1, 2004
§§ 1.908–1.1000	(869–052–00088–4)	60.00	Apr. 1, 2004
§§ 1.1001–1.1400	(869–052–00089–2)	61.00	Apr. 1, 2004
§§ 1.1401–1.1503–2A	(869–052–00090–6)	55.00	Apr. 1, 2004
§§ 1.1551–End	(869–052–00091–4)	55.00	Apr. 1, 2004
2–29	(869–052–00092–2)	60.00	Apr. 1, 2004
30–39	(869–052–00093–1)	41.00	Apr. 1, 2004
40–49	(869–052–00094–9)	28.00	Apr. 1, 2004
50–299	(869–052–00095–7)	41.00	Apr. 1, 2004
300–499	(869–052–00096–5)	61.00	Apr. 1, 2004

Title	Stock Number	Price	Revision Date
500–599	(869–052–00097–3)	12.00	[5]Apr. 1, 2004
600–End	(869–052–00098–1)	17.00	Apr. 1, 2004
27 Parts:			
1–199	(869–052–00099–0)	64.00	Apr. 1, 2004
200–End	(869–052–00100–7)	21.00	Apr. 1, 2004
28 Parts:			
0–42	(869–052–00101–5)	61.00	July 1, 2004
43–End	(869–052–00102–3)	60.00	July 1, 2004
29 Parts:			
0–99	(869–052–00103–1)	50.00	July 1, 2004
100–499	(869–052–00104–0)	23.00	July 1, 2004
500–899	(869–052–00105–8)	61.00	July 1, 2004
900–1899	(869–052–00106–6)	36.00	July 1, 2004
1900–1910 (§§ 1900 to 1910.999)	(869–052–00107–4)	61.00	July 1, 2004
1910 (§§ 1910.1000 to end)	(869–052–00108–2)	46.00	[8]July 1, 2004
1911–1925	(869–052–00109–1)	30.00	July 1, 2004
1926	(869–052–00110–4)	50.00	July 1, 2004
1927–End	(869–052–00111–2)	62.00	July 1, 2004
30 Parts:			
1–199	(869–052–00112–1)	57.00	July 1, 2004
200–699	(869–052–00113–9)	50.00	July 1, 2004
700–End	(869–052–00114–7)	58.00	July 1, 2004
31 Parts:			
0–199	(869–052–00115–5)	41.00	July 1, 2004
200–End	(869–052–00116–3)	65.00	July 1, 2004
32 Parts:			
1–39, Vol. I		15.00	[2]July 1, 1984
1–39, Vol. II		19.00	[2]July 1, 1984
1–39, Vol. III		18.00	[2]July 1, 1984
1–190	(869–052–00117–1)	61.00	July 1, 2004
191–399	(869–052–00118–0)	63.00	July 1, 2004
400–629	(869–052–00119–8)	50.00	[8]July 1, 2004
630–699	(869–052–00120–1)	37.00	[7]July 1, 2004
700–799	(869–052–00121–0)	46.00	July 1, 2004
800–End	(869–052–00122–8)	47.00	July 1, 2004
33 Parts:			
1–124	(869–052–00123–6)	57.00	July 1, 2004
125–199	(869–052–00124–4)	61.00	July 1, 2004
200–End	(869–052–00125–2)	57.00	July 1, 2004
34 Parts:			
1–299	(869–052–00126–1)	50.00	July 1, 2004
300–399	(869–052–00127–9)	40.00	July 1, 2004
400–End	(869–052–00128–7)	61.00	July 1, 2004
35	(869–052–00129–5)	10.00	[6]July 1, 2004
36 Parts			
1–199	(869–052–00130–9)	37.00	July 1, 2004
200–299	(869–052–00131–7)	37.00	July 1, 2004
300–End	(869–052–00132–5)	61.00	July 1, 2004
37	(869–052–00133–3)	58.00	July 1, 2004
38 Parts:			
0–17	(869–052–00134–1)	60.00	July 1, 2004
18–End	(869–052–00135–0)	62.00	July 1, 2004
39	(869–052–00136–8)	42.00	July 1, 2004
40 Parts:			
1–49	(869–052–00137–6)	60.00	July 1, 2004
50–51	(869–052–00138–4)	45.00	July 1, 2004
52 (52.01–52.1018)	(869–052–00139–2)	60.00	July 1, 2004
52 (52.1019–End)	(869–052–00140–6)	61.00	July 1, 2004
53–59	(869–052–00141–4)	31.00	July 1, 2004
60 (60.1–End)	(869–052–00142–2)	58.00	July 1, 2004
60 (Apps)	(869–052–00143–1)	57.00	July 1, 2004
61–62	(869–052–00144–9)	45.00	July 1, 2004
63 (63.1–63.599)	(869–052–00145–7)	58.00	July 1, 2004
63 (63.600–63.1199)	(869–052–00146–5)	50.00	July 1, 2004
63 (63.1200–63.1439)	(869–052–00147–3)	50.00	July 1, 2004
63 (63.1440–63.8830)	(869–052–00148–1)	64.00	July 1, 2004
64–71	(869–052–00150–3)	29.00	July 1, 2004
72–80	(869–052–00151–1)	62.00	July 1, 2004
81–85	(869–052–00152–0)	60.00	July 1, 2004
86 (86.1–86.599–99)	(869–052–00153–8)	58.00	July 1, 2004
86 (86.600–1–End)	(869–052–00154–6)	50.00	July 1, 2004
87–99	(869–052–00155–4)	60.00	July 1, 2004
100–135	(869–052–00156–2)	45.00	July 1, 2004
136–149	(869–052–00157–1)	61.00	July 1, 2004
150–189	(869–052–00158–9)	50.00	July 1, 2004
190–259	(869–052–00159–7)	39.00	July 1, 2004
260–265	(869–052–00160–1)	50.00	July 1, 2004
266–299	(869–052–00161–9)	50.00	July 1, 2004
300–399	(869–052–00162–7)	42.00	July 1, 2004
400–424	(869–052–00163–5)	56.00	[8]July 1, 2004
425–699	(869–052–00164–3)	61.00	July 1, 2004
700–789	(869–052–00165–1)	61.00	July 1, 2004
790–End	(869–052–00166–0)	61.00	July 1, 2004
41 Chapters:			
1, 1–1 to 1–10		13.00	[3]July 1, 1984
1, 1–11 to Appendix, 2 (2 Reserved)		13.00	[3]July 1, 1984
3–6		14.00	[3]July 1, 1984
7		6.00	[3]July 1, 1984
8		4.50	[3]July 1, 1984
9		13.00	[3]July 1, 1984
10–17		9.50	[3]July 1, 1984
18, Vol. I, Parts 1–5		13.00	[3]July 1, 1984
18, Vol. II, Parts 6–19		13.00	[3]July 1, 1984
18, Vol. III, Parts 20–52		13.00	[3]July 1, 1984
19–100		13.00	[3]July 1, 1984
1–100	(869–052–00167–8)	24.00	July 1, 2004
101	(869–052–00168–6)	21.00	July 1, 2004
102–200	(869–052–00169–4)	56.00	July 1, 2004
201–End	(869–052–00170–8)	24.00	July 1, 2004
42 Parts:			
1–399	(869–050–00169–1)	60.00	Oct. 1, 2003
400–429	(869–052–00172–4)	63.00	Oct. 1, 2004
*430–End	(869–052–00173–2)	64.00	Oct. 1, 2004
43 Parts:			
*1–999	(869–052–00174–1)	56.00	Oct. 1, 2004
1000–End	(869–050–00173–0)	62.00	Oct. 1, 2003
***44**	(869–052–00176–7)	50.00	Oct. 1, 2004
45 Parts:			
1–199	(869–052–00177–5)	60.00	Oct. 1, 2004
200–499	(869–052–00178–3)	34.00	Oct. 1, 2004
500–1199	(869–050–00177–2)	50.00	Oct. 1, 2003
*1200–End	(869–052–00180–5)	61.00	Oct. 1, 2004
46 Parts:			
1–40	(869–050–00179–9)	46.00	Oct. 1, 2003
41–69	(869–050–00180–2)	39.00	Oct. 1, 2003
70–89	(869–050–00181–1)	14.00	Oct. 1, 2003
90–139	(869–050–00182–9)	44.00	Oct. 1, 2003
140–155	(869–052–00185–6)	25.00	Oct. 1, 2004
156–165	(869–050–00184–5)	34.00	Oct. 1, 2003
166–199	(869–050–00185–3)	46.00	Oct. 1, 2003
200–499	(869–052–00188–1)	40.00	Oct. 1, 2004
500–End	(869–052–00189–9)	25.00	Oct. 1, 2004
47 Parts:			
0–19	(869–050–00188–8)	61.00	Oct. 1, 2003
20–39	(869–050–00189–6)	45.00	Oct. 1, 2003
40–69	(869–050–00190–0)	39.00	Oct. 1, 2003
70–79	(869–050–00191–8)	61.00	Oct. 1, 2003
80–End	(869–050–00192–6)	61.00	Oct. 1, 2003
48 Chapters:			
1 (Parts 1–51)	(869–050–00193–4)	63.00	Oct. 1, 2003
1 (Parts 52–99)	(869–050–00194–2)	50.00	Oct. 1, 2003
*2 (Parts 201–299)	(869–052–00197–0)	50.00	Oct. 1, 2004
*3–6	(869–052–00198–8)	34.00	Oct. 1, 2004
7–14	(869–050–00197–7)	61.00	Oct. 1, 2003
15–28	(869–050–00198–5)	57.00	Oct. 1, 2003
29–End	(869–050–00199–3)	38.00	[9]Oct. 1, 2003
49 Parts:			
1–99	(869–050–00200–1)	60.00	Oct. 1, 2003

Title	Stock Number	Price	Revision Date
100–185	(869–050–00201–9)	63.00	Oct. 1, 2003
186–199	(869–050–00202–7)	20.00	Oct. 1, 2003
200–399	(869–050–00203–5)	64.00	Oct. 1, 2003
400–599	(869–050–00204–3)	63.00	Oct. 1, 2003
600–999	(869–052–00207–1)	19.00	Oct. 1, 2004
1000–1199	(869–050–00206–0)	26.00	Oct. 1, 2003
1200–End	(869–048–00207–8)	33.00	Oct. 1, 2003
50 Parts:			
*1–16	(869–052–00210–1)	11.00	Oct. 1, 2004
17.1–17.95	(869–050–00209–4)	62.00	Oct. 1, 2003
17.96–17.99(h)	(869–050–00210–8)	61.00	Oct. 1, 2003
17.99(i)–end	(869–050–00211–6)	50.00	Oct. 1, 2003
18–199	(869–050–00212–4)	42.00	Oct. 1, 2003
*200–599	(869–052–00215–1)	45.00	Oct. 1, 2004
600–End	(869–050–00214–1)	61.00	Oct. 1, 2003
CFR Index and Findings Aids	(869–052–00049–3)	62.00	Jan. 1, 2004
Complete 2004 CFR set		1,342.00	2004
Microfiche CFR Edition:			
Subscription (mailed as issued)		325.00	2004
Individual copies		2.00	2004
Complete set (one-time mailing)		298.00	2003
Complete set (one-time mailing)		298.00	2002

[1] Because Title 3 is an annual compilation, this volume and all previous volumes should be retained as a permanent reference source.

[2] The July 1, 1985 edition of 32 CFR Parts 1–189 contains a note only for Parts 1–39 inclusive. For the full text of the Defense Acquisition Regulations in Parts 1–39, consult the three CFR volumes issued as of July 1, 1984, containing those parts.

[3] The July 1, 1985 edition of 41 CFR Chapters 1–100 contains a note only for Chapters 1 to 49 inclusive. For the full text of procurement regulations in Chapters 1 to 49, consult the eleven CFR volumes issued as of July 1, 1984 containing those chapters.

[4] No amendments to this volume were promulgated during the period January 1, 2003, through January 1, 2004. The CFR volume issued as of January 1, 2002 should be retained.

[5] No amendments to this volume were promulgated during the period April 1, 2000, through April 1, 2004. The CFR volume issued as of April 1, 2000 should be retained.

[6] No amendments to this volume were promulgated during the period July 1, 2000, through July 1, 2004. The CFR volume issued as of July 1, 2000 should be retained.

[7] No amendments to this volume were promulgated during the period July 1, 2002, through July 1, 2004. The CFR volume issued as of July 1, 2002 should be retained.

[8] No amendments to this volume were promulgated during the period July 1, 2003, through July 1, 2004. The CFR volume issued as of July 1, 2003 should be retained.

[9] No amendments to this volume were promulgated during the period October 1, 2001, through October 1, 2003. The CFR volume issued as of October 1, 2001 should be retained.