Federal Register

12–15–04 Wednesday
Vol. 69 No. 240 Dec. 15, 2004

Pages 74947–75222

The **FEDERAL REGISTER** (ISSN 0097–6326) is published daily, Monday through Friday, except official holidays, by the Office of the Federal Register, National Archives and Records Administration, Washington, DC 20408, under the Federal Register Act (44 U.S.C. Ch. 15) and the regulations of the Administrative Committee of the Federal Register (1 CFR Ch. I). The Superintendent of Documents, U.S. Government Printing Office, Washington, DC 20402 is the exclusive distributor of the official edition. Periodicals postage is paid at Washington, DC.

The **FEDERAL REGISTER** provides a uniform system for making available to the public regulations and legal notices issued by Federal agencies. These include Presidential proclamations and Executive Orders, Federal agency documents having general applicability and legal effect, documents required to be published by act of Congress, and other Federal agency documents of public interest.

Documents are on file for public inspection in the Office of the Federal Register the day before they are published, unless the issuing agency requests earlier filing. For a list of documents currently on file for public inspection, see *www.archives.gov.*

The seal of the National Archives and Records Administration authenticates the Federal Register as the official serial publication established under the Federal Register Act. Under 44 U.S.C. 1507, the contents of the **Federal Register** shall be judicially noticed.

The **Federal Register** is published in paper and on 24x microfiche. It is also available online at no charge as one of the databases on GPO Access, a service of the U.S. Government Printing Office.

The online edition of the **Federal Register** *www.gpoaccess.gov/nara,* available through GPO Access, is issued under the authority of the Administrative Committee of the Federal Register as the official legal equivalent of the paper and microfiche editions (44 U.S.C. 4101 and 1 CFR 5.10). It is updated by 6 a.m. each day the **Federal Register** is published and includes both text and graphics from Volume 59, Number 1 (January 2, 1994) forward.

For more information about GPO Access, contact the GPO Access User Support Team, call toll free 1-888-293-6498; DC area 202-512-1530; fax at 202-512-1262; or via e-mail at *gpoaccess@gpo.gov.* The Support Team is available between 7:00 a.m. and 9:00 p.m. Eastern Time, Monday–Friday, except official holidays.

The annual subscription price for the **Federal Register** paper edition is $749 plus postage, or $808, plus postage, for a combined **Federal Register, Federal Register** Index and List of CFR Sections Affected (LSA) subscription; the microfiche edition of the **Federal Register** including the **Federal Register** Index and LSA is $165, plus postage. Six month subscriptions are available for one-half the annual rate. The prevailing postal rates will be applied to orders according to the delivery method requested. The price of a single copy of the daily **Federal Register,** including postage, is based on the number of pages: $11 for an issue containing less than 200 pages; $22 for an issue containing 200 to 400 pages; and $33 for an issue containing more than 400 pages. Single issues of the microfiche edition may be purchased for $3 per copy, including postage. Remit check or money order, made payable to the Superintendent of Documents, or charge to your GPO Deposit Account, VISA, MasterCard, American Express, or Discover. Mail to: New Orders, Superintendent of Documents, P.O. Box 371954, Pittsburgh, PA 15250-7954; or call toll free 1-866-512-1800, DC area 202-512-1800; or go to the U.S. Government Online Bookstore site, see *bookstore.gpo.gov.*

There are no restrictions on the republication of material appearing in the **Federal Register.**

How To Cite This Publication: Use the volume number and the page number. Example: 69 FR 12345.

Postmaster: Send address changes to the Superintendent of Documents, Federal Register, U.S. Government Printing Office, Washington DC 20402, along with the entire mailing label from the last issue received.

SUBSCRIPTIONS AND COPIES

PUBLIC

Subscriptions:

Paper or fiche	**202–512–1800**
Assistance with public subscriptions	**202–512–1806**

General online information **202–512–1530; 1–888–293–6498**

Single copies/back copies:

Paper or fiche	**202–512–1800**
Assistance with public single copies	**1–866–512–1800 (Toll-Free)**

FEDERAL AGENCIES

Subscriptions:

Paper or fiche	**202–741–6005**
Assistance with Federal agency subscriptions	**202–741–6005**

What's NEW!

Federal Register Table of Contents via e-mail

Subscribe to FEDREGTOC, to receive the **Federal Register** Table of Contents in your e-mail every day.

If you get the HTML version, you can click directly to any document in the issue.

To subscribe, go to **http://listserv.access.gpo.gov** and select:

Online mailing list archives
FEDREGTOC-L
Join or leave the list

Then follow the instructions.

What's NEW!

Regulations.gov, the award-winning Federal eRulemaking Portal

Regulations.gov is the one-stop U.S. Government web site that makes it easy to participate in the regulatory process.

Try this fast and reliable resource to find all rules published in the *Federal Register* that are currently open for public comment. Submit comments to agencies by filling out a simple web form, or use available e-mail addresses and web sites.

The Regulations.gov e-democracy initiative is brought to you by NARA, GPO, EPA and their eRulemaking partners.

Visit the web site at: **http://www.regulations.gov**

Printed on recycled paper.

Contents

Federal Register

Vol. 69, No. 240

Wednesday, December 15, 2004

Agricultural Marketing Service
NOTICES
Agency information collection activities; proposals, submissions, and approvals, 75043
Meetings:
Fruit and Vegetable Industry Advisory Committee, 75043–75044

Agriculture Department
See Agricultural Marketing Service

Citizenship and Immigration Services Bureau
NOTICES
Agency information collection activities; proposals, submissions, and approvals, 75078

Coast Guard
RULES
Drawbridge operations:
Iowa and Illinois, 74975–74976
PROPOSED RULES
Anchorage regulations and ports and waterways safety:
Delaware River, PA; safey zone, 75009–75011
Drawbridge operations:
Massachusetts, 75013–75015
New York, 75011–75013

Commerce Department
See International Trade Administration
See National Oceanic and Atmospheric Administration

Customs and Border Protection Bureau
NOTICES
Trade name recordation applications:
DYNAMIC Controls & Sensors, Inc., 75078–75079

Defense Department
RULES
Acquisition regulations:
Competition requirements, 74990–74991
Construction and architect-engineer services, 75000
Debarment, suspension, and business ethics; improper business practices and contractor qualifications, 74989–74990
Firefighting services contracts, 75000–75001
Pilot Mentor-Protege Program, 74995–75000
Task and delivery order contracts; contract period, 74992–74994
U.S.-Chile and U.S.-Singapore Free Trade Agreements; implementation, 74991–74992

Defense Nuclear Facilities Safety Board
NOTICES
Recommendations:
Confinement of hazardous materials at defense nuclear facilities, 75047–75049

Drug Enforcement Administration
RULES
Records and reports of listed chemicals and certain machines:
Chemical mixtures; exemption of List II chemicals acetone, etc., 74957–74973

Employee Benefits Security Administration
NOTICES
Employee benefit plans; class exemptions:
Interest free loans, 75088–75090

Energy Department
See Federal Energy Regulatory Commission
RULES
Acquisition regulations:
Work for others; non-Department of Energy funded work, 75001–75004
PROPOSED RULES
Acquisition regulations:
Contractor make-or-buy plans, 75017–75020
NOTICES
Electricity export and import authorizations, permits, etc.:
Wisconsin Public Service Corp., 75049

Environmental Protection Agency
RULES
Air programs; State authority delegations:
Louisiana, 74979–74985
PROPOSED RULES
Air programs; State authority delegations:
Louisiana, 75015–75016
NOTICES
Pesticide, food, and feed additive petitions:
Interregional Research Project (No. 4), 75066–75070
Pesticide registration, cancellation, etc.:
Disulfoton, 75061–75063
Shake-Away et al., 75063–75065

Executive Office of the President
See Presidential Documents

Federal Aviation Administration
RULES
Class E airspace, 74953–74956
NOTICES
Aeronautical land-use assurance; waivers:
Nick Wilson Field, AR, 75102–75103
Passenger facility charges; applications, etc.:
Duluth International Airport, MN, 75103
Montgomery Regional Airport, AL, 75104

Federal Communications Commission
RULES
Common carrier services:
Federal-State Joint Board on Universal Service—Universal service policy, 74985–74988
Wireless telecommunications services—Spectrum-based services to rural areas and opportunities for rural telephone companies to provide these services, 75143–75173
Digital television stations; table of assignments:
Hawaii, 74988–74989
PROPOSED RULES
Common carrier services:
Wireless telecommunications services—Spectrum-based services to rural areas and opportunities for rural telephone companies to provide these services, 75173–75185

Radio stations; table of assignments:
Idaho, 75016
Kentucky, 75017
Washington, 75016–75017
NOTICES
Agency information collection activities; proposals, submissions, and approvals, 75070–75072

Federal Emergency Management Agency
NOTICES
Privacy Act:
Systems of records, 75079–75081

Federal Energy Regulatory Commission
NOTICES
Hydroelectric applications, 75057–75059
Meetings:
California Independent System Operator Corp.; technical conference, 75059–75060
Off-the-record communications, 75060
Reports and guidance documents; availability, etc.:
Public utilities—
Market-based rates, 75060
Applications, hearings, determinations, etc.:
ALLETE, Inc., 75049–75050
Aquila, Inc., 75050
Boulder, CO, 75050–75051
Equitrans, L.P., 75051
Gas Transmission Northwest Corp., 75051–75052
Gulfstream Natural Gas System, L.L.C, 75052
International Paper Co., 75052–75053
Maritimes & Northeast Pipeline, L.L.C, 75053
Natural Gas Pipeline Co. of America, 75053–75054
Northwest Pipeline Corp., 75054–75055
Questar Pipeline Co., 75055
Southern Star Central Gas Pipeline, Inc., 75055–75056
Symbiotics, LLC, et al.; correction, 75056
Texas Eastern Transmission, LP, 75056
Transcontinental Gas Pipe Line Corp., 75056

Federal Maritime Commission
NOTICES
Agreements filed, etc., 75072
Ocean transportation intermediary licenses:
DRT International, Inc., et al., 75072
Eagle Pacific Corp. et al., 75072–75073

Federal Reserve System
NOTICES
Banks and bank holding companies:
Change in bank control, 75073
Formations, acquisitions, and mergers, 75073

Fish and Wildlife Service
NOTICES
Environmental statements; notice of intent:
Sequim-Dungeness Valley Agricultural Water Users Association, WA; conservation plan, 75045–75046

Food and Drug Administration
NOTICES
Medical devices:
Premarket approval applications, list; safety and effectiveness summaries availability, 75073–75075

Health and Human Services Department
See Food and Drug Administration
See Health Resources and Services Administration
See National Institutes of Health

Health Resources and Services Administration
NOTICES
Meetings:
Heritable Disorders and Genetic Diseases in Newborns and Children Advisory Committee, 75075

Homeland Security Department
See Citizenship and Immigration Services Bureau
See Coast Guard
See Customs and Border Protection Bureau
See Federal Emergency Management Agency

Housing and Urban Development Department
RULES
Mortgage and loan insurance programs:
Home Equity Conversion Mortgage Program; insurance for mortgages to refinance existing loans, 75203–75205
PROPOSED RULES
Public and Indian housing:
Demolition or disposition of public housing projects, 75187–75201
NOTICES
Agency information collection activities; proposals, submissions, and approvals, 75081–75083
Grant and cooperative agreement awards:
Doctoral Dissertation Research Program, 75083–75084

Interior Department
See Fish and Wildlife Service
See Land Management Bureau
See Reclamation Bureau
NOTICES
Interior Board of Land Appeals; Hearings and Appeals Office:
Alternative dispute resolution; pilot referral program, 75084–75085

International Trade Administration
NOTICES
North American Free Trade Agreement (NAFTA); binational panel reviews:
Pure magnesium from—
Canada; correction, 75044

International Trade Commission
NOTICES
Import investigations:
Pet food treats, 75087

Justice Department
See Drug Enforcement Administration

Labor Department
See Employee Benefits Security Administration
NOTICES
Reports and guidance documents; availability, etc.:
Research misconduct; policy statement; correction, 75217–75222

Land Management Bureau
NOTICES
Realty actions; sales, leases, etc.:
New Mexico, 75085
Recreation management restrictions, etc.:
Grand Junction Field Office-administered public lands, CO; firearms or dangerous weapons target shooting; emergency closure, 75085–75086

National Archives and Records Administration
RULES
Records management:
Unscheduled records; transfer to storage facilities, 74976–74977

National Highway Traffic Safety Administration
PROPOSED RULES
Motor vehicle safety standards:
Occupant crash protection—
Door locks and retention components and side impact protection, 75020–75042
NOTICES
Agency information collection activities; proposals, submissions, and approvals, 75104–75105
Motor vehicle safety standards:
Exemption petitions, etc.—
Bridgestone/Firestone North American Tire, LLC, 75106
Unified Marine, Inc., 75106–75107

National Institutes of Health
NOTICES
Meetings:
National Cancer Institute, 75075
National Heart, Lung, and Blood Institute, 75075–75076
National Institute of Diabetes and Digestive and Kidney Diseases, 75076
National Institute of Nursing Research, 75076
National Library of Medicine, 75076–75077
Scientific Review Center, 75077–75078

National Oceanic and Atmospheric Administration
RULES
Fishery conservation and management:
Alaska; fisheries of Exclusive Economic Zone—
Bering Sea and Aleutian Islands groundfish, 75005–75006
Pacific cod, 75004–75005
NOTICES
Coastal zone management programs and estuarine sanctuaries:
Consistency appeals—
Vidal, Pedro, 75044–75045
Environmental statements; notice of intent:
Sequim-Dungeness Valley Agricultural Water Users Association, WA; conservation plan, 75045–75046
Permits:
Endangered and threatened species, 75047
Marine mammals, 75047

Nuclear Regulatory Commission
RULES
Classifed information; access authorization and facility security clearance regulations, 74949–74953
PROPOSED RULES
Classifed information; access authorization and facility security clearance regulations, 75007–75009
NOTICES
Meetings; Sunshine Act, 75090–75091

Pension Benefit Guaranty Corporation
RULES
Single-employer plans:
Allocation of assets—
Interest assumptions for valuing and paying benefits, 74973–74975
NOTICES
Multi-employer plans:
Interest rates and assumptions, 75091

Presidential Documents
PROCLAMATIONS
Special observances:
Human Rights Day, Bill of Rights Day, and Human Rights Week (Proc. 7854), 74947–74948

Reclamation Bureau
NOTICES
Environmental statements; availability, etc.:
Central Valley Project, CA; San Joaquin River Water Transfer Program, 75086–75087

Research and Special Programs Administration
RULES
Hazardous materials:
Transportation—
Primary lithium batteries and cells; prohibition aboard passenger aircraft, 75207–75216

Securities and Exchange Commission
NOTICES
Self-regulatory organizations; proposed rule changes:
Chicago Board Options Exchange, Inc., 75092–75093
International Securities Exchange, Inc., 75093–75100
National Association of Securities Dealers, Inc., 75100–75102
Applications, hearings, determinations, etc.:
Plymouth Rubber Company, Inc., 75091–75092

Small Business Administration
NOTICES
Small business size standards:
Nonmanufacturer rule; waivers—
General aviation turboprop aircraft with six or more passenger seats, 75102

Thrift Supervision Office
NOTICES
Agency information collection activities; proposals, submissions, and approvals, 75107–75111

Transportation Department
See Federal Aviation Administration
See National Highway Traffic Safety Administration
See Research and Special Programs Administration

Treasury Department
See Thrift Supervision Office
NOTICES
Agency information collection activities; proposals, submissions, and approvals, 75107

Veterans Affairs Department
RULES
Vocational rehabilitation and education:
Veterans education—
Montgomery GI Bill-Active Duty Program; rates payable increase, 74977–74979
NOTICES
Medical benefits:
Medical care or services; reasonable charges for inpatient diagnostic related group and skilled nursing facility sevices, 75111–75141

Separate Parts In This Issue

Part II
Federal Communications Commission, 75143–75185

Part III
Housing and Urban Development Department, 75187–75201

Part IV
Housing and Urban Development Department, 75203–75205

Part V
Transportation Department, Research and Special Programs Administration, 75207–75216

Part VI
Labor Department, 75217–75222

Reader Aids

Consult the Reader Aids section at the end of this issue for phone numbers, online resources, finding aids, reminders, and notice of recently enacted public laws.

To subscribe to the Federal Register Table of Contents LISTSERV electronic mailing list, go to http://listserv.access.gpo.gov and select Online mailing list archives, FEDREGTOC-L, Join or leave the list (or change settings); then follow the instructions.

CFR PARTS AFFECTED IN THIS ISSUE

A cumulative list of the parts affected this month can be found in the Reader Aids section at the end of this issue.

3 CFR
Proclamation:
7854 74947

10 CFR
25 74949
95 74949
Proposed Rules:
25 75007
95 75007

14 CFR
71 (3 documents) 74953, 74954, 74955

21 CFR
1310 74957

24 CFR
206 75204
Proposed Rules:
970 75188

29 CFR
4022 74973
4044 74973

33 CFR
117 74975
Proposed Rules:
110 75009
117 (2 documents) 75011, 75013
165 75009

36 CFR
1228 74976

38 CFR
21 74977

40 CFR
63 74979
Proposed Rules:
63 75015

47 CFR
1 75144
22 75144
24 75144
27 75144
54 74985
73 74988
90 75144
Proposed Rules:
1 75174
22 75174
24 75174
27 75174
73 (3 documents) 75016, 75017
90 75174

48 CFR
203 74989
206 74990
209 74989
212 74991
213 74991
217 74992
219 74995
App. I 74995
225 74991
236 75000
237 75000
252 (2 documents) 74989, 74991
909 75001
970 75001
Proposed Rules:
901 75017
970 75017

49 CFR
171 75208
172 75208
173 75208
175 75208
Proposed Rules:
571 75020

50 CFR
679 (2 documents) 75004, 75005

Federal Register
Vol. 69, No. 240
Wednesday, December 15, 2004

Presidential Documents

Title 3—

The President

Proclamation 7854 of December 10, 2004

Human Rights Day, Bill of Rights Day, and Human Rights Week, 2004

By the President of the United States of America

A Proclamation

During Human Rights Day, Bill of Rights Day, and Human Rights Week, we celebrate the founding ideals of our Nation and emphasize the importance of protecting human liberty throughout the world.

As a Nation, we cherish the values of free speech, equality, and religious freedom, and we steadfastly oppose injustice and tyranny. Since the founding of America, the Bill of Rights has protected basic human rights and liberties. In the United States, all citizens have the opportunity to voice their opinions, practice their faith, and enjoy the blessings of freedom.

After the tragedies of World War II, the United Nations General Assembly adopted the Universal Declaration of Human Rights as part of a global effort to curb the cruelty and systematic injustice that had destroyed so many lives. The Universal Declaration of Human Rights affirms the inalienable rights of people everywhere.

In the time since, progress has been made in ensuring that human dignity is respected, and we have witnessed the rise of democratic governments around the world. No other system of government has done more to protect minorities, secure the rights of labor, raise the status of women, or channel human energy to the pursuits of peace than democracy.

My Administration continues to encourage free and open societies around the world. In Burma, we have called on the ruling junta to release Aung San Suu Kyi and engage in dialogue to bring democracy to that country. We are helping lead the international effort to end the suffering in Sudan. We seek to help the people of North Korea, who are struggling to survive under severe repression and difficult living conditions, and our Nation continues to stand with those who strive for democracy in Belarus, Cuba, Iran, and Zimbabwe.

My Administration also has advanced the fight against human trafficking and the abuse and exploitation of women and children, particularly of young girls in the sex trade. In addition, we have expanded our Nation's support for democracy promotion programs globally and have increased the budget for the National Endowment for Democracy to strengthen support for free elections, free markets, free speech, and human rights advocacy around the world.

Freedom and dignity are God's gift to each man and woman in the world. During this observance, we encourage all nations to continue working towards freedom, peace, and security, which can be achieved only through democracy, respect for human rights, and the rule of law.

NOW, THEREFORE, I, GEORGE W. BUSH, President of the United States of America, by virtue of the authority vested in me by the Constitution and laws of the United States, do hereby proclaim December 10, 2004, as Human Rights Day; December 15, 2004, as Bill of Rights Day; and the week beginning December 10, 2004, as Human Rights Week. I call upon the people of the United States to honor the legacy of human rights passed

down to us from previous generations and to mark these observances with appropriate ceremonies and activities.

IN WITNESS WHEREOF, I have hereunto set my hand this tenth day of December, in the year of our Lord two thousand four, and of the Independence of the United States of America the two hundred and twenty-ninth.

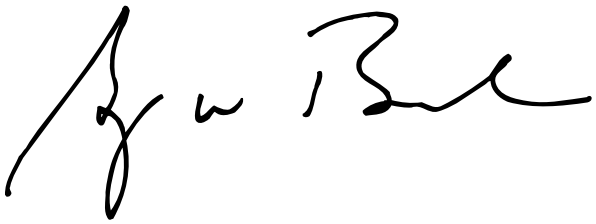

[FR Doc. 04–27575
Filed 12–14–04; 8:45 am]
Billing code 3195–01–P

Rules and Regulations

Federal Register

Vol. 69, No. 240

Wednesday, December 15, 2004

This section of the FEDERAL REGISTER contains regulatory documents having general applicability and legal effect, most of which are keyed to and codified in the Code of Federal Regulations, which is published under 50 titles pursuant to 44 U.S.C. 1510.

The Code of Federal Regulations is sold by the Superintendent of Documents. Prices of new books are listed in the first FEDERAL REGISTER issue of each week.

NUCLEAR REGULATORY COMMISSION

10 CFR Parts 25 and 95

RIN 3150–AH52

Broadening Scope of Access Authorization and Facility Security Clearance Regulations

AGENCY: Nuclear Regulatory Commission.

ACTION: Direct final rule.

SUMMARY: The Nuclear Regulatory Commission (NRC or Commission) is amending its regulations to broaden the scope of the regulations applicable to persons who may require access to classified information, to include persons who may need access in connection with licensing and regulatory activities under the regulations that govern the disposal of high-level radioactive waste in geologic repositories, and persons who may need access in connection with other activities as the Commission may determine, such as vendors of advanced reactor designs. The Commission is also amending its regulations to broaden the scope of the regulations applicable to procedures for obtaining facility security clearances, to include persons who may need to use, process, store, reproduce, transmit, transport, or handle NRC classified information in connection with the above-identified activities. In addition, NRC is correcting the scope section of the regulations that govern access authorization for licensee personnel to include certificate holders and applicants for a certificate; clarifying the definition of ''license'' in the regulations that govern access authorization for licensee personnel and govern facility security clearance to include a reference to the regulations that govern combined licenses; correcting a typographical error in the definition of ''security container'' in its facility security regulations; and updating the references to Executive Order 12958 which has been amended.

DATES: The final rule is effective on February 28, 2005, unless significant adverse comments are received by January 14, 2005. A significant adverse comment is a comment where the commenter explains why the rule would be inappropriate, including challenges to the rule's underlying premise or approach, or would be ineffective or unacceptable without a change. In addition, if the NRC receives substantive comments on the information collection requirements by January 14, 2005, the direct final rule will be withdrawn. Then, the NRC will publish a document that withdraws the direct final rule and will address the comments received in a final rule as a response to the companion proposed rule published elsewhere in this issue of the **Federal Register**.

ADDRESSES: You may submit comments by any one of the following methods. Please include the following number (RIN 3150–AH52) in the subject line of your comments. Comments on rulemakings submitted in writing or in electronic form will be made available for public inspection. Because your comments will not be edited to remove any identifying or contact information, the NRC cautions you against including personal information such as social security numbers and birth dates in your submission.

Mail comments to: Secretary, U.S. Nuclear Regulatory Commission, Washington, DC 20555–0001, Attn: Rulemakings and Adjudications Staff.

E-mail comments to: SECY@nrc.gov. If you do not receive a reply e-mail confirming that we have received your comments, contact us directly at (301) 415–1966. You may also submit comments via the NRC's rulemaking Web site at *http://ruleforum.llnl.gov.* Address questions about our rulemaking Web site to Carol Gallagher (301) 415–5905; e-mail *cag@nrc.gov.* Comments can also be submitted via the Federal eRulemaking Portal *http://www.regulations.gov.*

Hand deliver comments to: 11555 Rockville Pike, Rockville, Maryland 20852, between 7:30 a.m. and 4:15 p.m. Federal workdays. (Telephone (301) 415–1966).

Fax comments to: Secretary, U.S. Nuclear Regulatory Commission at (301) 415–1101.

Publicly available documents related to this rulemaking may be viewed electronically on the public computers located at the NRC's Public Document Room (PDR), O1 F21, One White Flint North, 11555 Rockville Pike, Rockville, Maryland. The PDR reproduction contractor will copy documents for a fee. Selected documents, including comments, may be viewed and downloaded electronically via the NRC rulemaking Web site at *http://ruleforum.llnl.gov.*

Publicly available documents created or received at the NRC after November 1, 1999, are available electronically at the NRC's Electronic Reading Room at *http://www.nrc.gov/reading-rm/adams.html.* From this site, the public can gain entry into the NRC's Agencywide Document Access and Management System (ADAMS), which provides text and image files of NRC's public documents. If you do not have access to ADAMS or if there are problems in accessing the documents located in ADAMS, contact the NRC Public Document Room (PDR) Reference staff at 1–800–397–4209, 301–415–4737 or by e-mail to *pdr@nrc.gov.*

Note: Public access to documents, including access via ADAMS and the PDR, has been temporarily suspended so that security reviews of publicly available documents may be performed and potentially sensitive information removed. However, access to the documents identified in this rule continues to be available through the rulemaking Web site at *http://ruleforum.llnl.gov,* which was not affected by the ADAMS shutdown. Please check with the listed NRC contact concerning any issues related to document availability.

FOR FURTHER INFORMATION CONTACT: Dr. Anthony N. Tse, Office of Nuclear Material Safety and Safeguards, U.S. Nuclear Regulatory Commission, Washington, DC 20555–0001, telephone (301) 415–6233, e-mail *ant@nrc.gov.*

SUPPLEMENTARY INFORMATION:

Background

NRC's regulations at 10 CFR Parts 25 and 95 govern access to and protection of classified information by licensees or other persons who have a need for access to this information. Part 25 contains procedures for establishing initial and continuing eligibility for access authorizations for individuals

who may require access to classified information. Part 95 contains procedures for obtaining a facility security clearance for licensees, certificate holders, or other persons who need to use, process, store, reproduce, transmit, transport, or handle certain types of NRC classified information at any location in connection with Commission-related activities. The purpose of this rulemaking is to amend Parts 25 and 95 to: (1) Add references to 10 CFR Parts 60 and 63 in §§ 25.5, 25.17(a) and 95.5; (2) expand the scope of §§ 25.3 and 95.3 to include persons who may not be licensees or certificate holders or applicants for a license or certificate; (3) clarify the definition of ''license'' in §§ 25.5 and 95.5 to include a reference to Part 52; (4) correct the omission of a reference to certificate holders in § 25.3; (5) correct a typographical error in the definition of ''security container'' in § 95.5; and (6) update references to Executive Order 12958 to reflect that this Executive Order has been amended and could be further amended in the future.

Discussion

Although 10 CFR 25.3 speaks broadly of the regulations that apply to ''licensees and others who may require access to classified information related to a license or an application for a license,'' in 10 CFR 25.5, ''license'' is defined to mean ''a license issued pursuant to 10 CFR Parts 50, 70, or 72.'' Similarly, 10 CFR 95.3 states that the regulations apply to licensees and certificate holders and others regulated by the Commission who need access in connection with a license or certificate or an application for a license or certificate. However, at 10 CFR 95.5, ''license'' is defined to mean ''a license issued pursuant to 10 CFR Parts 50, 70, or 72.'' Absent from these provisions is any reference to the Commission's regulations that govern the issuance of construction authorizations and licenses for disposal of high-level radioactive waste in geologic repositories (10 CFR Part 60) or in a potential geologic repository at Yucca Mountain, Nevada (10 CFR Part 63). Parts 25 and 95 were published on March 5, 1980; 45 FR 14476, before issuance of Part 60 (February 25, 1981; 46 FR 13971) or Part 63 (November 2, 2001; 66 FR 55732) and Parts 25 and 95 were not amended to include these regulations. The Commission currently anticipates receiving a license application from the U.S. Department of Energy under the provisions of Part 63. An adjudicatory proceeding on this license application could implicate the need for access authorizations and facility security clearances by persons who are admitted as parties to the proceeding. Accordingly, NRC is amending the definition of ''license'' in §§ 25.5 and 95.5 to include references to licenses issued under Parts 60 and 63. For the same reason, references to Parts 60 and 63 are added to § 25.17(a).

A second restriction that presently exists in 10 CFR 25.3 and 95.3 is that the requested access authorizations or facility security clearances must be related to a license or certificate, or an application for a license or certificate. There may be, however, certain Commission-related activities undertaken by entities who are not licensees or certificate holders, or applicants for a license or certificate where an access authorization or facility security clearance may be needed. The NRC believes there is a need for access authorizations and facility security clearances for vendors who are involved in the design of advanced reactors. These vendors could need access to classified information which would enable them to consider potential mitigative measures for operating reactors and design features for the various advanced reactor systems. Currently, a vendor who is not an NRC licensee or a contractor to an NRC licensee and does not have a facility clearance or access authorization provided by another Government agency, is not eligible for an access authorization or a facility security clearance under Parts 25 and 95. NRC believes that most current vendors of advanced reactor designs are NRC licensees or contractors to NRC licensees or holders of clearances from other Government agencies. However, to allow for the possibility that there could be vendors who would need to seek access authorizations and facility security clearances through the regulations at Parts 25 and 95, the NRC is adding language to the scope sections of these parts to allow the processing of requests for access authorization or facility security clearances with respect to ''other activities as the Commission may determine.'' This language could also be used to begin the processing of such requests, in advance of NRC's receipt of a license application under Part 63, by potential parties in an adjudication on the application, or in circumstances when a need for access authorization might arise in the future.

Further, the NRC is clarifying the definition of ''license'' in §§ 25.5 and 95.5 to include a reference to Part 52 which contains provisions for combined licenses in Subpart C and for manufacturing licenses in Appendix M. Although NRC's intent that access authorizations needed in connection with activities under Part 52 be included is evidenced by a reference to Part 52 in § 25.17(a), a similar reference to Part 52 does not appear in the definition of ''license'' in §§ 25.5 and 95.5. The Commission is correcting this oversight in this rulemaking.

In this rulemaking, the NRC is also correcting the omission of a reference to certificate holders in § 25.3. Although § 25.5 includes a definition of ''certificate holder'' and § 25.17(a) includes activities under Part 76 that issue certificates to gaseous diffusion plants, § 25.3, unlike § 95.3, does not include a reference to certificate holders or certificates. The NRC believes this is an oversight that is now being corrected.

In addition, the NRC is correcting a typographical error which appears in the definition of ''security container'' in § 95.5. In the description of a ''safe'' in paragraph (2), the phrase ''at least ½ thick'' should read ''at least ½ inch thick.''

Finally, NRC is amending references to Executive Order 12958 where they appear in Parts 25 and 95 to include the phrase ''as amended.'' This reflects that Executive Order 12958 was amended on March 25, 2003 by Executive Order 13292 (68 FR 15315; March 28, 2003) and could be further amended in the future.

Discussion of Amendment by Section

Section 25.3 Scope

The current scope limits the access to classified information to access ''related to a license or an application for a license.'' This scope is broadened to include persons who may need access in connection with other activities as the Commission may determine, such as vendors of advanced reactor designs. Thus, the phrase ''or other activities as the Commission may determine'' is added to this section. The Commission is also correcting an oversight by including certificate holders in this section.

Section 25.5 Definitions

References to Parts 52, 60, and 63 are added to the definition of ''license.''

The phrase ''Executive Order 12958'' is replaced by ''Executive Order 12958, as amended'' under definitions of ''classified national security information'' and ''national security information.''

Section 25.17 Approval for Processing Applicants for Access Authorizations

References to Parts 60 and 63 are added to paragraph (a).

Section 25.37 Violations

The phrase, ''Executive Order 12958'' is replaced by ''Executive Order 12958, as amended'' in paragraph (b).

Section 95.3 Scope

The current scope applies to ''licensees, certificate holders and others regulated by the Commission'' who may require access to certain types of classified information ''in connection with a license or certificate or an application for a license or certificate.'' The Commission is broadening the scope of the regulations applicable to procedures for obtaining facility security clearances, to include persons who may need to use, process, store, reproduce, transmit, transport, or handle NRC classified information in connection with other activities as the Commission may determine, such as vendors of advanced reactor designs. Thus, the phrase ''regulated by the Commission'' is deleted and the phrase ''or other activities as the Commission may determine'' is added.

Section 95.5 Definitions

References to Parts 52, 60, and 63 are added under the definition of ''license.''

The phrase ''E.O. 12958'' is replaced by ''E.O. 12958, as amended'' under definitions of ''classified national security information,'' ''infraction,'' and ''violation.''

The phrase ''at least ½ thick'' is replaced by ''at least ½ inch thick'' under the definition of ''Security container,'' paragraph (2).

Section 95.59 Inspections

The phrase ''E.O. 12958'' is replaced by ''E.O. 12958, as amended.''

Procedural Background

This rulemaking will become effective on February 28, 2005. However, if the NRC receives significant adverse comments by January 14, 2005 or if the NRC receives substantive comments on information collection requirements by January 14, 2005, then the NRC will publish a document that withdraws the direct final rule and will address the comments received in a final rule as a response to the companion proposed rule published elsewhere in this issue of the **Federal Register**. Absent significant modifications to the proposed revisions requiring republication, the NRC will not initiate a second comment period on this action.

A significant adverse comment is a comment where the commenter explains why the rule would be inappropriate, including challenges to the rule's underlying premise or approach, or would be ineffective or unacceptable without a change. A comment is adverse and significant if:

(1) The comment opposes the rule and provides a reason sufficient to require a substantive response in a notice-and-comment process. For example, a substantive response is required when:

(a) The comment causes the NRC staff to reevaluate (or reconsider) its position or conduct additional analysis;

(b) The comment raises an issue serious enough to warrant a substantive response to clarify or complete the record; or

(c) The comment raises a relevant issue that was not previously addressed or considered by the NRC staff.

(2) The comment proposes a change or an addition to the rule, and it is apparent that the rule would be ineffective or unacceptable without incorporation of the change or addition.

(3) The comment causes the staff to make a change (other than editorial) to the rule.

Agreement State Compatibility

Under the ''Policy Statement on Adequacy and Compatibility of Agreement State Programs'' approved by the Commission on June 30, 1997, and published in the **Federal Register** on September 3, 1997 (62 FR 46517), this rule is classified as Compatibility Category ''NRC.'' Compatibility is not required for Category ''NRC'' regulations. The NRC program elements in this category are those that relate directly to areas of regulation reserved to the NRC by the Atomic Energy Act of 1954, as amended (AEA), or the provisions of Title 10 of the Code of Federal Regulations. Although an Agreement State may not adopt program elements reserved to NRC, it may wish to inform its licensees of certain requirements via a mechanism that is consistent with the particular State's administrative procedure laws but does not confer regulatory authority on the State.

Plain Language

The Presidential Memorandum dated June 1, 1998, entitled, ''Plain Language in Government Writing'' directed that the Government's writing be in plain language. The NRC requests comments on this direct final rule specifically with respect to the clarity and effectiveness of the language used. Comments should be sent to the address listed under the heading **ADDRESSES** above.

Voluntary Consensus Standards

The National Technology Transfer Act of 1995 (Pub. L. 104–113) requires that Federal agencies use technical standards that are developed or adopted by voluntary consensus standards bodies unless the use of such a standard is inconsistent with applicable law or otherwise impractical. In this direct final rule, the NRC broadens the scope of Parts 25 and 95 by adding references to Parts 60 and 63 and by including language in the scope sections which will enable NRC to consider access authorizations and facility security clearance for persons who are not licensees or certificate holders or applicants for a license or certificate. This action does not constitute the establishment of a standard that establishes generally applicable requirements.

Environmental Impact: Categorical Exclusion

The NRC has determined that this direct final rule is the type of action described in categorical exclusion 10 CFR 51.22(c)(1). Therefore neither an environmental impact statement nor an environmental assessment has been prepared for this direct final rule.

Paperwork Reduction Act Statement

This direct final rule contains amended information collection requirements that are subject to the Paperwork Reduction Act of 1995 (44 U.S.C. 3501 *et seq*). This rule has been submitted to the Office of Management and Budget for review and approval of the information collection requirements.

Type of submission, new or revision: Revision.

The title of the information collection: 10 CFR Part 25—Access Authorization for Licensee Personnel; 10 CFR Part 95—Facility Security Clearance and Safeguarding of National Security Information and Restricted Data.

The form number if applicable: Not applicable.

How often the collection is required: On occasion.

Who will be required or asked to report: Persons who may need access in connection with licensing and regulatory activities under 10 CFR Parts 60 and 63 for the disposal of high-level radioactive waste in geologic repositories and in connection with other activities as the Commission may determine, such as vendors of advanced reactor designs.

An estimate of the number of annual responses: 688 (Part 25: 572; Part 95:116).

The estimated number of respondents (one time): 34 (Part 25: 28; Part 95: 6).

An estimate of the total number of hours needed annually to complete the requirement or request: 485 (Part 25: 150; Part 95: 335).

Abstract: The NRC is broadening the scope of its regulations applicable to persons who may require access to classified information to include persons who may need access in connection with licensing and regulatory activities under 10 CFR Parts 60 and 63 for the disposal of high-level radioactive waste in geologic repositories, and persons who may need access in connection with other activities as the Commission may determine, such as vendors of advanced reactor designs. The Commission is also broadening the scope of its regulations applicable to procedures for obtaining facility security clearances to include persons who may need to use, process, store, reproduce, transmit, transport, or handle NRC classified information in connection with the above-identified activities.

The U.S. Nuclear Regulatory Commission is seeking public comment on the potential impact of the information collections contained in this direct final rule and on the following issues:

1. Is the proposed information collection necessary for the proper performance of the functions of the NRC, including whether the information will have practical utility?
2. Is the estimate of burden accurate?
3. Is there a way to enhance the quality, utility, and clarity of the information to be collected?
4. How can the burden of the information collection be minimized, including the use of automated collection techniques?

A copy of the OMB clearance package may be viewed free of charge at the NRC Public Document Room, One White Flint North, 11555 Rockville Pike, Room O–1 F21, Rockville, MD 20852. The OMB clearance package and rule are available at the NRC worldwide Web site: *http://www.nrc.gov/public-involve/doc-comment/omb/index.html* for 60 days after the signature date of this notice and are also available at the rule forum site, *http://ruleforum.llnl.gov.*

Send comments on any aspect of these proposed information collections, including suggestions for reducing the burden and on the above issues, by January 14, 2005 to the Records and FOIA/Privacy Services Branch (T–5 F52), U.S. Nuclear Regulatory Commission, Washington, DC 20555–0001, or by Internet electronic mail to *INFOCOLLECTS@NRC.GOV* and to the Desk Officer, John A. Asalone, Office of Information and Regulatory Affairs, NEOB–10202, (3150–0046 and 3150–0047), Office of Management and Budget, Washington, DC 20503. Comments received after this date will be considered if it is practical to do so, but assurance of consideration cannot be given to comments received after this date. You may also e-mail comments to *John_A._Asalone@omb.eop.gov* or comment by telephone at (202) 395–4650.

Public Protection Notification

The NRC may not conduct or sponsor, and a person is not required to respond to, a request for information or an information collection requirement unless the requesting document displays a currently valid OMB control number.

Regulatory Analysis

A regulatory analysis has not been prepared for this direct final rule because this rule is considered minor and not a substantial amendment; it has no economic impact on NRC licensees or the public.

Regulatory Flexibility Certification

In accordance with the Regulatory Flexibility Act of 1980 (5 U.S.C. 605(b)), the Commission certifies that this rule does not have a significant economic impact on a substantial number of small entities. This rule merely makes procedures available to individuals and entities for obtaining access authorizations and facility security clearances in connection with licensing activities under Parts 60 and 63 or with other activities as the Commission may determine, corrects the omission of a reference to Part 52 in the definition of ''license'' in Parts 25 and 95, corrects the omission of a reference to certificate holders in Part 25, updates references to Executive Order 12958, and clarifies a dimension used to describe a security container.

Backfit Analysis

The NRC has determined that the backfit rule (§§ 50.109, 70.76, 72.62, or 76.76) does not apply to this direct final rule because this amendment does not involve any provisions that would impose backfits as defined in the backfit rule. Therefore, a backfit analysis is not required.

Small Business Regulatory Enforcement Fairness Act

In accordance with the Small Business Regulatory Enforcement Fairness Act of 1996, the NRC has determined that this action is not a major rule and has verified this determination with the Office of Information and Regulatory Affairs of OMB.

List of Subjects

10 CFR Part 25

Classified information, Criminal penalties, Investigations, Reporting and recordkeeping requirements, Security measures.

10 CFR Part 95

Classified information, Criminal penalties, Reporting and recordkeeping requirements, Security measures.

■ For the reasons set out in the preamble and under the authority of the Atomic Energy Act of 1954, as amended; the Energy Reorganization Act of 1974, as amended; and 5 U.S.C. 552 and 553; the NRC is adopting the following amendments to 10 CFR parts 25 and 95.

PART 25—ACCESS AUTHORIZATION FOR LICENSEE PERSONNEL

■ 1. The authority citation for part 25 is revised to read as follows:

Authority: Secs. 145, 161, 68 Stat. 942, 948, as amended (42 U.S.C. 2165, 2201); sec. 201, 88 Stat. 1242, as amended (42 U.S.C. 5841); sec. 1704, 112 Stat. 2750 (44 U.S.C. 3504 note); E.O. 10865, as amended, 3 CFR 1959–1963 Comp., p. 398 (50 U.S.C. 401, note); E.O. 12829, 3 CFR, 1993 Comp., p.570; E.O. 12958, 3 CFR, 1995 Comp., p. 333, as amended by E. O. 13292, 3 CFR, 2004 Comp., p.196; E.O. 12968, 3 CFR, 1995 Comp, p. 396.

Appendix A also issued under 96 Stat. 1051 (31 U.S.C. 9701).

■ 2. Section 25.3 is revised to read as follows:

§ 25.3 Scope.

The regulations in this part apply to licensees, certificate holders, and others who may require access to classified information related to a license, certificate, an application for a license or certificate, or other activities as the Commission may determine.

■ 3. In § 25.5, the definitions of Classified National Security Information, License, and National Security Information are revised to read as follows:

§ 25.5 Definitions.

* * * * *

Classified National Security Information means information that has been determined pursuant to E.O. 12958, as amended, or any predecessor order to require protection against unauthorized disclosure and that is so designated.

* * * * *

License means a license issued under 10 CFR parts 50, 52, 60, 63, 70, or 72.

* * * * *

National Security Information means information that has been determined

under Executive Order 12958, as amended, or any predecessor order to require protection against unauthorized disclosure and that is so designated.

* * * * *

■ 4. In § 25.17, paragraph (a) is revised to read as follows:

§ 25.17 Approval for processing applicants for access authorization.

(a) Access authorizations must be requested for licensee employees or other persons (*e.g.*, 10 CFR part 2, subpart I) who need access to classified information in connection with activities under 10 CFR Parts 50, 52, 54, 60, 63, 70, 72, or 76.

* * * * *

■ 5. In § 25.37, paragraph (b) is revised to read as follows:

§ 25.37 Violations.

* * * * *

(b) National Security Information is protected under the requirements and sanctions of Executive Order 12958, as amended.

PART 95—FACILITY SECURITY CLEARANCE AND SAFEGUARDING OF NATIONAL SECURITY INFORMATION AND RESTRICTED DATA

■ 6. The authority for part 95 is revised to read as follows:

Authority: Secs. 145, 161, 193, 68 Stat. 942, 948, as amended (42 U.S.C. 2165, 2201); sec. 201, 88 Stat. 1242, as amended (42 U.S.C. 5841); sec. 1704, 112 Stat. 2750 (44 U.S.C. 3504 note); E.O. 10865, as amended, 3 CFR 1959–1963 Comp., p. 398 (50 U.S.C. 401, note); E.O. 12829, 3 CFR, 1993 Comp., p.570; E.O. 12958, as amended, 3 CFR, 1995 Comp., p.333, as amended by E. O. 13292, 3 CFR, 2004 Comp., p.196; E.O. 12968, 3 CFR, 1995 Comp., P. 391.

■ 7. Section 95.3 is revised to read as follows:

§ 95.3 Scope.

The regulations in this part apply to licensees, certificate holders and others who may require access to classified National Security Information and/or Restricted Data and/or Formerly Restricted Data (FRD) that is used, processed, stored, reproduced, transmitted, transported, or handled in connection with a license or certificate or an application for a license or certificate, or other activities as the Commission may determine.

■ 8. In § 95.5, the definitions of License and paragraph (2) of Security container are revised to read as follows:

§ 95.5 Definitions.

* * * * *

License means a license issued pursuant to 10 CFR parts 50, 52, 60, 63, 70, or 72.

* * * * *

Security container includes any of the following repositories:

* * * * *

(2) A safe—burglar-resistive cabinet or chest which bears a label of the Underwriters' Laboratories, Inc., certifying the unit to be a TL–15, TL–30, or TRTL–30, and has a body fabricated of not less than 1 inch of steel and a door fabricated of not less than 1½ inches of steel exclusive of the combination lock and bolt work; or bears a Test Certification Label on the inside of the door, or is marked ''General Services Administration Approved Security Container'' and has a body of steel at least ½ inch thick, and a combination locked steel door at least 1 inch thick, exclusive of bolt work and locking devices; and an automatic unit locking mechanism.

* * * * *

■ 9. Section 95.59 is revised to read as follows:

§ 95.59 Inspections.

The Commission shall make inspections and reviews of the premises, activities, records and procedures of any person subject to the regulations in this part as the Commission and CSA deem necessary to effect the purposes of the Act, E.O. 12958, as amended, and/or NRC rules.

Dated at Rockville, Maryland, this 30th day of November, 2004.

For the Nuclear Regulatory Commission.

Luis A. Reyes,

Executive Director for Operations.

[FR Doc. 04–27405 Filed 12–14–04; 8:45 am]

BILLING CODE 7590–01–P

DEPARTMENT OF TRANSPORTATION

Federal Aviation Administration

14 CFR Part 71

[Docket No. FAA–2004–19405; Airspace Docket No. 2004–ASW–14]

Modification to Class E Airspace; Mena, AR

AGENCY: Federal Aviation Administration (FAA), DOT.

ACTION: Direct final rule; request for comments.

SUMMARY: This action revises the Class E airspace area at Mena Intermountain Municipal Airport, Mena, AR (M39) to provide adequate controlled airspace for the redesigned Non-Directional Beacon (NDB) and the new Instrument Landing System (ILS) and Localizer (LOC) SIAPs.

DATES: Effective 0901 UTC, March 17, 2005.

Comments for inclusion in the Rules Docket must be received on or before December 30, 2004.

ADDRESSES: Send comments on the rule to the Docket Management System, U.S. Department of Transportation, Room Plaza 401, 400 Seventh Street, SW., Washington, DC 20590–0001. You must identify the docket number, FAA–2004–19405/Airspace Docket No. 2004–ASW–14, at the beginning of your comments. You may also submit comments on the Internet at *http://dms.dot.gov.* Anyone can find and read the comments received in this docket, including the name, address and any other personal information placed in the docket by a commenter. You may review the public docket containing any comments received and this direct final rule in person at the Dockets Office between 9 a.m. and 5 p.m., Monday through Friday, except Federal holidays. The Docket Office (telephone 1–800–647–5527) is located on the plaza level of the Department of Transportation NASSIF Building at the street address stated previously.

An informal docket may also be examined during normal business hours at the office of the Air Traffic Division, Airspace Branch, Federal Aviation Administration, Southwest Region, 2601 Meacham Boulevard, Fort Worth, TX. Call the manager, Airspace Branch, ASW–520, telephone (817) 222–5520; fax (817) 222–5981, to make arrangements for your visit.

FOR FURTHER INFORMATION CONTACT: Joseph R. Yadouga, Air Traffic Division, Airspace Branch, Federal Aviation Administration, Southwest Region, Fort Worth, TX 76193–0520; telephone: (817) 222–5597.

SUPPLEMENTARY INFORMATION: This amendment to 14 CFR Part 71 modifies the Class E airspace area extending upward from 700 feet above the surface of Mena, AR and will be published in paragraph 6005 of FAA Order 7400.9M, dated August 30, 2004, and effective September 16, 2004, which is incorporated by reference in 14 CFR 71.1.

The Direct Final Rule Procedure

The FAA anticipates that this regulation will not result in an adverse or negative comment, and, therefore, issues it as a direct final rule. The FAA has determined that this regulation only involves an established body of technical regulations for which frequent and routine amendments are necessary

to keep them operationally current. Unless a written adverse or negative comment, or a written notice of intent to submit an adverse or negative comment is received within the comment period, the regulation will become effective on the date specified. After the close of the comment period, the FAA will publish a document in the **Federal Register** indicating that no adverse or negative comments were received and confirming the date on which the final rule will become effective. If the FAA does receive, within the comment period, an adverse or negative comment, or written notice of an intent to submit such a comment, a document withdrawing the direct final rule will be published in the **Federal Register,** and a notice of proposed rulemaking may be published with a new comment period.

Comments Invited

Although this action is in the form of a direct final rule, and was not preceded by a notice of proposed rulemaking, interested persons are invited to comment on this rule by submitting such written data, views, or arguments as they may desire. Communications must identify both docket numbers. All communications received on or before the closing date for comments will be considered, and this rule may be amended or withdrawn in light of the comments received. Factual information that supports the commenter's ideas and suggestions is extremely helpful in evaluating the effectiveness of this action and determining whether additional rulemaking action would be needed.

Comments are specifically invited on the overall regulatory, economic, environmental, and energy aspects of the rule that might suggest a need to modify the rule. All comments submitted will be available, both before and after the closing date for comments, in the Rules Docket for examination by interested persons. A report that summarizes each FAA-public contact concerned with the substance of this action will be filed in the Rules Docket.

Agency Findings

This rule does not have federalism implications, as defined in Executive Order No. 13132, because it does not have a substantial direct effect on the States, on the relationship between the national government and the States, or on the distribution of power and responsibilities among the various levels of government. Accordingly, the FAA has not consulted with state authorities prior to publication of this rule.

The FAA has determined that this regulation is noncontroversial and unlikely to result in adverse or negative comments. For the reasons discussed, I certify that this regulation (1) is not a ''significant regulatory action'' under Executive Order 12866; (2) is not a ''significant rule'' under Department of Transportation (DOT) Regulatory Policies and Procedures (44 FR 11034, February 26, 1979); and (3) does not warrant preparation of a Regulatory Evaluation as these routine matters will only affect air traffic procedures and air navigation. I certify that this rule will not have a significant economic impact on a substantial number of small entities under the criteria of the Regulatory Flexibility Act.

List of Subjects in 14 CFR Part 71

Airspace, Incorporation by reference, Navigation (air).

Adoption of the Amendment

■ Accordingly, pursuant to the authority delegated to me, the Federal Aviation Administration amends part 71 of the Federal Aviation Regulations (14 CFR part 71) as follows:

PART 71—DESIGNATION OF CLASS A, CLASS B, CLASS C, CLASS D, AND CLASS E AIRSPACE AREAS; AIRWAYS; ROUTES; AND REPORTING POINTS

■ 1. The authority citation for part 71 continues to read as follows:

Authority: 49 U.S.C. 106(g), 40103, 40113, 40120; E.O. 10854, 24 FR 9565, 3 CFR, 1959–1963 Comp., p. 389.

§ 71.1 [Amended]

■ 2. The incorporation by reference in 14 CFR 71.1 of Federal Aviation Administration Order 7400.9M. Airspace Designations and Reporting Points, dated August 30, 2004, and effective September 16, 2004, is amended as follows:

Paragraph 605 Class E airspace areas extending upward from 700 feet or more above the surface of the earth.

* * * * *

ASW AR E5 Mena, AR [Revised]

Mena Intermountain Municipal Airport, AR
La. 34°32′43″ N, Long, 94°12′09″ W
Mena RBN (VMU)
La. 34°32′21″ N, Long. 94°04′23″ W
That airspace extending upward from 700 feet above the surface within a 6.9-mile radius of the Mena Intermountain Municipal Airport, Mena, AR and within 4 miles south and 8 miles north of the 086° radial from the Mena RBN extending from 6.9-mile radius to 16 miles east of the RBN and within 2 miles each side of the 001° bearing from the airport extending from the 6.9-mile radius to 12.6 miles north of the airport.

* * * * *

Issued in Forth Worth, TX, on December 8, 2004.

Herman J. Lyons, Jr.

Area Director, Central En Route and Oceanic Operations.

[FR Doc. 04–27459 Filed 12–14–04; 8:45 am]

BILLING CODE 4910–13–M

DEPARTMENT OF TRANSPORTATION

Federal Aviation Administration

14 CFR Part 71

[Docket No. FAA–2004–19406; Airspace Docket No. 2004–ASW–15]

Establishment to Class E Airspace; Melbourne, AR

AGENCY: Federal Aviation Administration (FAA), DOT.

ACTION: Direct final rule; request for comments.

SUMMARY: This action establishes the Class E airspace area at Melbourne Muni—John E Miller Field, Melbourne, AR (42A) to provide adequate controlled airspace for the area navigation (RNAV) global positioning system (GPS) standard instrument approach procedure (SIAP).

DATES: Effective 0901 UTC, March 17, 2005.

Comments for inclusion in the Rules Docket must be received on or before December 30, 2004.

ADDRESSES: Send comments on the rule to the Docket Management System, U.S. Department of Transportation, Room Plaza 401, 400 Seventh Street, SW., Washington, DC 20590–0001. You must identify the docket number, FAA–2004–19406/Airspace Docket No. 2004–ASW–15, at the beginning of your comments. You may also submit comments on the Internet at *http://dms.dot.gov.* Anyone can find and read the comments received in this docket, including the name, address and any other personal information placed in the docket by a commenter. You may review the public docket containing any comments received and this direct final rule in person at the Dockets Office between 9 a.m. and 5 p.m., Monday through Friday, except Federal holidays. The Docket Office (telephone 1–800–647–5527) is located on the plaza level of the Department of Transportation NASSIF Building at the street address stated previously.

An informal docket may also be examined during normal business hours

at the office of the Air Traffic Division, Airspace Branch, Federal Aviation Administration, Southwest Region, 2601 Meacham Boulevard, Forth Worth, TX. Call the manager, Airspace Branch, ASW–520, telephone (817) 222–5520; fax (817) 222–5981, to make arrangements for your visit.

FOR FURTHER INFORMATION CONTACT: Joseph R. Yadouga, Air Traffic Division, Airspace Branch, Federal Aviation Administration, Southwest Region, Fort Worth, TX 76193–0520; telephone: (817)222–5597.

SUPPLEMENTARY INFORMATION: This amendment to 14 CFR part 71 establishes a Class E airspace area extending upward from 700 feet above the surface of Melbourne, AR and will be published in paragraph 6005 of FAA Order 7400.9M, dated August 30, 2004, and effective September 16, 2004, which is incorporated by reference in 14 CFR 71.1.

The Direct Final Rule Procedure

The FAA anticipates that this regulation will not result in an adverse or negative comment, and, therefore, issues it as a direct final rule. The FAA has determined that this regulation only involves an established body of technical regulations for which frequent and routine amendments are necessary to keep them operationally current. Unless a written adverse or negative comment, or a written notice of intent to submit an adverse or negative comment is received within the comment period, the regulation will become effective on the date specified. After the close of the comment period, the FAA will publish a document in the **Federal Register** indicating that no adverse or negative comments were received and confirming the date on which the final rule will become effective. If the FAA does receive, within the comment period, an adverse or negative comment, or written notice of an intent to submit such a comment, a document withdrawing the direct final rule will be published in the **Federal Register**, and a notice of proposed rulemaking may be published with a new comment period.

Comments Invited

Although this action is the form of a direct final rule, and was not preceded by a notice of proposed rulemaking, interested persons are invited to comment on this rule by submitting such written data, views, or arguments as they may desire. Communications must identify both docket numbers. All communications received on or before the closing date for comments will be considered, and this rule may be amended or withdrawn in light of the comments received. Factual information that supports the commenters' ideas and suggestions is extremely helpful in evaluating the effectiveness of this action and determining whether additional rulemaking action would be needed.

Comments are specifically invited on the overall regulatory, economic, environmental, and energy aspects of the rule that might suggest a need to modify the rule. All comments submitted will be available, both before and after the closing date for comments, in the Rules Docket for examination by interested persons. A report that summarizes each FAA-public contact concerned with the substance of this action will be filed in the Rules Docket.

Agency Findings

This rule does not have federalism implications, as defined in Executive Order no. 13132, because it does not have a substantial direct effect on the States, or on the distribution of power and responsibilities among the various levels of government. Accordingly, the FAA has not consulted with state authorities prior to publication of this rule.

The FAA has determined that this regulation is noncontroversial and unlikely to result in adverse or negative comments. For the reasons discussed, I certify that this regulation (1) is not a ''significant regulatory action'' under Executive Order 12866; (2) is not a ''significant rule'' under Department of Transportation (DOT) Regulatory Policies and Procedures (44 FR 11034, February 26, 1979); and (3) does not warrant preparation of a Regulatory Evaluation as these routine matters will only affect air traffic procedures and air navigation. I certify that this rule will not have a significant economic impact on a substantial number of small entities under the criteria of the Regulatory Flexibility Act.

List of Subjects in 14 CFR Par 71

Airspace, Incorporation by reference, Navigation (air).

Adoption of the Amendment

■ Accordingly, pursuant to the authority delegated to me, the Federal Aviation Administration amends part 71 of the Federal Aviation Regulations (14 CFR part 71) as follows:

PART 71—DESIGNATION OF CLASS A, CLASS B, CLASS C, CLASS D, AND CLASS E AIRSPACE AREAS; AIRWAYS; ROUTES; AND REPORTING POINTS

■ 1. The authority citation for part 71 continues to read as follows:

Authority: 49 U.S.C. 106(g), 40103, 40113, 40120; E.O. 10854, 24 FR 9565, 3 CFR 1959–1963 Comp., p.389.

§ 71.1 [Amended]

■ 2. The incorporation by reference in 14 CFR 71.1 of Federal Aviation Administration Order 7400.9M, Airspace Designations and Reporting Points, dated August 30, 2004, and effective September 16, 2004, is amended as follows:

Paragraph 6005 Class E airspace areas extending upward from 700 feet or more above the surface of the earth.

* * * * *

ASW AR E5 Melbourne, AR [New]

Melbourne Muni—John E Miller Field, AR
Lat. 36°04′16″ N, Long, 91°49′48″ W
That airspace extending upward from 700 feet above the surface within a 6.5-mile radius of the Melbourne Muni—John E miller Field, Melbourne, AR.

* * * * *

Issued in Fort Worth, TX, on December 8, 2004.

Herman J. Lyons,

Area Director, Central En Route and Oceanic Operations.

[FR Doc. 04–27460 Filed12–14–04; 8:45 am]

BILLING CODE 4910–13–M

DEPARTMENT OF TRANSPORTATION

Federal Aviation Administration

14 CFR Part 71

[Docket No. FAA–2004–19407 Airspace Docket No. 2004–ASW–16]

Establishment to Class E Airspace; Mount Vernon, TX

AGENCY: Federal Aviation Administration (FAA), DOT.

ACTION: Direct final rule; request for comments.

SUMMARY: This action establishes the Class E airspace area at Franklin County Airport, Mount Vernon, TX (F53) to provide adequate controlled airspace for the area navigation (RNAV) global positioning system (GPS) standard instrument approach procedure (SIAP).

DATES: Effective 0901 UTC, May 12, 2005.

Comments for inclusion in the Rules Docket must be received on or before December 30, 2004.

ADDRESSES: Send comments on the rule to the Docket Management System, U.S. Department of Transportation, Room Plaza 401, 400 Seventh Street, SW., Washington, DC 20590–0001. You must identify the docket number, FAA–2004–19407/Airspace Docket No. 2004–ASW–16, at the beginning of your comments. You may also submit comments on the Internet at *http://dms.dot.gov.* Anyone can find and read the comments received in this docket, including the name, address and any other personal information placed in the docket by a commenter. You may review the public docket containing any comments received and this direct final rule in person at the Dockets Office between 9 a.m. and 5 p.m., Monday through Friday, except Federal holidays. The Docket Office (telephone 1–800–647–5527) is located on the plaza level of the Department of Transportation NASSIF Building at the street address stated previously.

An informal docket may also be examined during normal business hours at the office of the Air Traffic Division, Airspace Branch, Federal Aviation Administration, Southwest Region, 2601 Meacham Boulevard, Fort Worth, TX. Call the manager, Airspace Branch, ASW–520, telephone (817) 222–5520; fax (817) 222–5981, to make arrangements for your visit.

FOR FURTHER INFORMATION CONTACT: Joseph R. Yadouga, Air Traffic Division, Airspace Branch, Federal Aviation Administration, Southwest Region, Forth Worth, TX 76193–0520; telephone: (817) 222–5597.

SUPPLEMENTARY INFORMATION: This amendment to 14 CFR part 71 establishes a Class E airspace area extending upward from 700 feet above the surface of Mount Vernon, TX and will be published in paragraph 6005 of FAA Order 7400.9M, dated August 30, 2004, and effective September 16, 2004, which is incorporated by reference in 14 CFR 71.1.

The Direct Final Rule Procedure

The FAA anticipates that this regulation will not result in an adverse or negative comment, and, therefore, issues it as a direct final rule. The FAA has determined that this regulation only involves an established body of technical regulations for which frequent and routine amendments are necessary to keep them operationally current. Unless a written adverse or negative comment, or a written notice of intent to submit an adverse or negative comment is received within the comment period, the regulation will become effective on the date specified. After the close of the comment period, the FAA will publish a document in the **Federal Register** indicating that no adverse or negative comments were received and confirming the date on which the final rule will become effective. If the FAA does receive, within the comment period, an adverse or negative comment, or written notice of an intent to submit such a comment, a document withdrawing the direct final rule will be published in the **Federal Register**, and a notice of proposed rulemaking may be published with a new comment period.

Comments Invited

Although this action is in the form of a direct final rule, and was not preceded by a notice of proposed rulemaking, interested persons are invited to comment on this rule by submitting such written data, views, or arguments as they may desire. Communications must identify both docket numbers. All communications received on or before the closing date for comments will be considered, and this rule may be amended or withdrawn in light of the comments received. Factual information that supports the commenter's ideas and suggestions is extremely helpful in evaluating the effectiveness of this action and determining whether additional rulemaking action would be needed.

Comments are specifically invited on the overall regulatory, economic, environmental, and energy aspects of the rule that might suggest a need to modify the rule. All comments submitted will be available, both before and after the closing date for comments, in the Rules Docket for examination by interested persons. A report that summarizes each FAA-public contact concerned with the substance of this action will be filed in the Rules Docket.

Agency Findings

This rule does not have federalism implications, as defined in Executive Order No. 13132, because it does not have a substantial direct effect on the States, on the relationship between the national government and the States, or on the distribution of power and responsibilities among the various levels of government. Accordingly, the FAA has not consulted with state authorities prior to publication of this rule.

The FAA has determined that this regulation is noncontroversial and unlikely to result in adverse or negative comments. For the reasons discussed, I certify that this regulation (1) is not a ''significant regulatory action'' under Executive Order 12866; (2) is not a ''significant rule'' under Department of Transportation (DOT) Regulatory Policies and Procedures (44 FR 11034, February 26, 1979); and (3) does not warrant preparation of a Regulatory Evaluation as these routine matters will only affect air traffic procedures and air navigation. I certify that this rule will not have a significant economic impact on a substantial number of small entities under the criteria of the Regulatory Flexibility Act.

List of Subjects in 14 CFR Part 71

Airspace, Incorporation by reference, Navigation (air).

Adoption of the Amendment

■ Accordingly, pursuant to the authority delegated to me, the Federal Aviation Administration amends part 71 of the Federal Aviation Regulations (14 CFR part 71) as follows:

PART 71—DESIGNATION OF CLASS A, CLASS B, CLASS C, CLASS D, AND CLASS E AIRSPACE AREAS; AIRWAYS; ROUTES; AND REPORTING POINTS

■ 1. The authority citation for part 71 continues to read as follows:

Authority: 49 U.S.C. 106(g), 40103, 40113, 40120; E.O. 10854, 24 FR 9565, 3 CFR, 1959–1963 Comp., p. 389.

§ 71.1 [Amended]

■ 2. The incorporation by reference in 14 CFR 71.1 of Federal Aviation Administration Order 7400.9M, Airspace Designations and Reporting Points, dated August 30, 2004, and effective September 16, 2004, is amended as follows:

Paragraph 6005 Class E airspace areas extending upward from 700 feet or more above the surface of the earth.

* * * * *

ASW TX E5 Mount Vernon, TX [New]

Franklin County Airport
Lat. 33°12′56″ N, Long. 95°14′15″ W
That airspace extending upward from 700 feet above the surface within a 6.6-mile radius of the Franklin County Airport, Mount Vernon, TX.

* * * * *

Issued in Fort Worth, TX, on December 8, 2004.

Herman J. Lyons,

Area Director, Central En Route and Oceanic Operations.

[FR Doc. 04–27461 Filed 12–14–04; 8:45 am]

BILLING CODE 4910–13–M

DEPARTMENT OF JUSTICE

Drug Enforcement Administration

21 CFR Part 1310

[Docket No. DEA–137F2]

RIN 1117–AA31

Exemption of Chemical Mixtures

AGENCY: Drug Enforcement Administration (DEA), Justice.

ACTION: Final rule with request for comment.

SUMMARY: On September 16, 1998, the Drug Enforcement Administration (DEA) published a Notice of Proposed Rulemaking (NPRM) (63 FR 49506) that proposed new regulations concerning chemical mixtures that contain any of the 34 listed chemicals subject to DEA control at that time. The NPRM was the initial step toward implementation of Controlled Substances Act (CSA) provisions that require that only those chemical mixtures identified by regulation be exempt from applicable regulatory controls. This Final Rule will implement regulations that define those chemical mixtures that qualify for automatic exemption for 27 of the 34 listed chemicals addressed in the NPRM.

Under separate rulemaking (68 FR 23195) DEA has finalized regulations pertaining to six of the listed chemicals addressed in the initial NPRM. That rulemaking specifies those chemical mixtures qualifying for automatic exemption based upon specific exemption categories and concentration limits. That rulemaking also finalized an application process for chemical mixtures that do not qualify for automatic exemption.

This Final Rulemaking will add a new provision not previously raised in the NPRM. This newly introduced provision will exempt from the recordkeeping and reporting requirements both domestic and import transactions in mixtures containing the List II chemicals acetone, ethyl ether, 2-butanone, and toluene. Because this exemption was not discussed in the NPRM published on September 16, 1998, DEA is implementing this exemption on an interim basis and requests public comment with respect to only this exemption.

DATES: This Final Rule is effective January 14, 2005. Persons seeking registration must apply on or before February 14, 2005, in order to continue their business pending final action by DEA on their application. DEA is seeking comments on new Section 1310.08(l) only. Written comments must be postmarked, and electronic comments must be sent, on or before January 14, 2005.

ADDRESSES: To ensure proper handling of comments, please reference ''Docket No. DEA–137F2'' on all written and electronic correspondence. Written comments being sent via regular mail should be sent to the Deputy Administrator, Drug Enforcement Administration, Washington, DC 20537, Attention: DEA Federal Register Representative/CCD. Written comments sent via express mail should be sent to DEA Headquarters, Attention: DEA Federal Register Representative/CCD, 2401 Jefferson-Davis Highway, Alexandria, VA 22301. Comments may be directly sent to DEA electronically by sending an electronic message to *dea.diversion.policy@usdoj.gov.* Comments may also be sent electronically through *http://www.regulations.gov* using the electronic comment form provided on that site. An electronic copy of this document is also available at the *http://www.regulations.gov* Web site. DEA will accept attachments to electronic comments in Microsoft word, WordPerfect, Adobe PDF, or Excel file formats only. DEA will not accept any file format other than those specifically listed here.

FOR FURTHER INFORMATION CONTACT: Christine A. Sannerud, Ph.D., Chief, Drug & Chemical Evaluation Section, Office of Diversion Control, Drug Enforcement Administration, Washington, DC 20537, telephone (202) 307–7183

SUPPLEMENTARY INFORMATION:

I. Background

Historical Legal Status of Chemical Mixtures

The Chemical Diversion and Trafficking Act of 1988 (Pub. L. 100–690) (CDTA) created the definition of ''chemical mixture'' (21 U.S.C. 802(40)), and exempted chemical mixtures from regulatory control. The CDTA established 21 U.S.C. 802(39)(A)(v) to exclude ''any transaction in a chemical mixture'' from the definition of a ''regulated transaction.'' The exemption of all chemical mixtures, however, provided traffickers with an unregulated source for obtaining listed chemicals for use in the illicit manufacture of controlled substances.

To remedy this situation, the Domestic Chemical Diversion Control Act of 1993 (DCDCA), enacted in April 1994, subjected chemical mixtures containing listed chemicals to CSA regulatory requirements, unless specifically exempted by regulation. The DCDCA, therefore, subjected all regulated chemical mixtures to recordkeeping, reporting, and security requirements of the CSA. Additionally, the DCDCA added a registration requirement for handlers of regulated List I chemical mixtures.

The DCDCA, however, also amended 21 U.S.C. 802(39)(A)(v) to provide the Attorney General with the authority to establish regulations exempting chemical mixtures from the definition of a ''regulated transaction'' ''based on a finding that the mixture is formulated in such a way that it cannot be easily used in the illicit production of a controlled substance and that the listed chemical or chemicals contained in the mixture cannot be readily recovered'' (21 U.S.C. 802(39)(A)(v)). This authority has been delegated to the Administrator of DEA by 28 CFR 0.100 and redelegated to the Deputy Administrator under 28 CFR 0.104 (Subpart R) Appendix Sec. 12.

Prior to publication of a final rulemaking, chemical mixtures containing listed chemicals have been treated as exempt from CSA regulatory control. This final rulemaking specifies criteria used to determine whether chemical mixtures qualify for automatic exemption from CSA chemical regulatory controls. Those chemical mixtures that do not meet the exemption criteria shall be treated as regulated chemicals and therefore subject to CSA chemical regulatory controls.

Since DEA recognizes that concentration or category criteria alone cannot identify all mixtures that warrant exemption, an application process has been implemented in 21 CFR 1310.13. This process, finalized in a Final Rule published in the **Federal Register** at 68 FR 23195 (May 1, 2003), allows manufacturers to apply for exemption from CSA regulatory controls, for those chemical mixtures that do not qualify for automatic exemption.

Chemical Mixture Definition

21 U.S.C. 802(40) defines the term ''chemical mixture'' as ''a combination of two or more chemical substances, at least one of which is not a List I chemical or a List II chemical, except that such term does not include any combination of a List I chemical or a List II chemical with another chemical that is present solely as an impurity.'' Therefore, a chemical mixture contains any number of listed chemicals along with any number of non-listed chemicals. A combination of only listed chemicals is, therefore, not a chemical mixture pursuant to CSA definition. As such, the regulatory controls pertaining

to each individual listed chemical are applicable.

DEA does not consider a chemical mixture to mean the combination of a listed chemical in an inert carrier. An inert carrier can be any chemical that does not interfere with the listed chemical's function but is present to aid in the delivery of the listed chemical so it can be used in some chemical process. Examples include, but are not limited to, solutions of listed chemicals such as methylamine in water or hydrogen chloride dissolved in water or alcohol. Sassafras oil, an essential oil mostly consisting of safrole, is not regarded as a chemical mixture containing safrole. It is regulated as the List I chemical safrole. These examples have always been treated as listed chemicals and are not new to this rulemaking. Persons who question if their formulations are chemical mixtures should contact DEA for guidance.

Federal Register Publications Pertaining to Chemical Mixture Exemption

Regulations regarding the exemption of chemical mixtures were initially proposed by DEA on October 13, 1994 as part of its proposed regulations to implement the DCDCA (59 FR 51888). In response to industry concerns, the proposed regulations were withdrawn on December 9, 1994 (59 FR 63738).

DEA proposed new regulations regarding the exemption of chemical mixtures by publishing a new NPRM entitled ''Exemption of Chemical Mixtures'' on September 16, 1998 (63 FR 49506). DEA proposed the following three-tiered approach to identify which chemical mixtures qualify for automatic exemption: (1) It contains a listed chemical at or below an established concentration limit; or (2) it falls within a specifically defined category; or (3) the manufacturer of the mixture applies for and is granted a specific exemption for the product.

1. Concentration Limits

DEA proposed that each chemical be assigned a concentration limit that, if found at or below the limit, will cause the mixture to be treated as a non-regulated chemical. This quantitative approach is considered necessary in order to simplify the method of identifying regulated chemical mixtures. Identifying regulated chemical mixtures by narrative is impractical due to the variety of chemical products. These concentration limits are expected to exempt the vast majority of chemical mixtures containing listed chemicals.

2. Exemption Categories

DEA also proposed the creation of three specific categories of automatic exemption. They are (1) waste materials regulated by the Environmental Protection Agency (EPA); (2) fully formulated paints and coatings; and (3) harvested plant material. A chemical mixture that falls into one of these three categories is exempt regardless of the amount of listed chemical it contains.

Waste materials were proposed as an exempt category provided there is documentation on EPA Form 8700–22 (Uniform Hazardous Waste Manifest) and the materials are being distributed to another person solely for the purpose of disposal by incineration. These mixtures include only those that are covered by EPA regulations and have a ''cradle to grave'' paper trail. Further, the exemption applies only to the extent that the Form 8700–22 is available for inspection and copying by DEA.

Completely formulated paints and coatings were proposed for exemption because they contain ingredients, such as pigments, and other components, which render them unsuitable to traffickers. Proposed for inclusion in this category were paints, clear coats, topcoats, primers, varnishes, sealers, adhesives, lacquers, stains, shellacs, inks, and temporary protective coatings.

The final proposed exempt category is harvested plant material. Harvested plant material that contains listed chemicals, while meeting the definition of a chemical mixture, was proposed for exemption if the plant material is not concentrated or changed from its natural state. This provision was finalized in a **Federal Register** Notice (68 FR 23195) published May 1, 2003. Harvested plant material refers to the plant itself and not material growing on a plant, such as Ergot, a source for the List I chemicals ergonovine and ergotamine.

3. Exemption by Application Process

As stated above, DEA recognizes that the concentration limit and category exemption criteria cannot identify all mixtures that should receive exemption status. DEA has implemented an application process to exempt additional mixtures (21 CFR 1310.13). This application process was also finalized in the Federal Register Notice (68 FR 23195) published May 1, 2003. Under the application process manufacturers may submit an application for exemption for those mixtures that do not qualify for automatic exemption. Exemption status can be granted if DEA determines that the mixture is formulated in such a way that it cannot be easily used in the illicit production of a controlled substance and the listed chemical cannot be readily recovered (*i.e.*, it meets the conditions in 21 U.S.C. 802(39)(A)(v)). An application may be for a single or a multiple number of formulations.

Actions Being Taken in This Final Rule

a. Exemption Based on Concentration Limits for Each Listed Chemical

While the September 16, 1998 NPRM (63 FR 49506) pertained to the regulation of chemical mixtures which contain any of 34 listed chemicals subject to DEA control, this rulemaking finalizes only those portions of the NPRM pertaining to the 27 chemicals given in The Table of Concentration Limits provided in this rulemaking (hereafter referred to as ''The Table''). Six of the 34 listed chemicals—ephedrine, N-methylephedrine, N-methylpseudoephedrine, norpseudoephedrine, phenylpropanolamine, and pseudoephedrine—were addressed in a separate rulemaking (68 FR 23195, May 1, 2003). Concentration limits for the List I chemical iodine, which were proposed to be established as part of the September 16, 1998 rulemaking, will be addressed in a separate rulemaking.

A concentration limit is established for each listed chemical provided in The Table. If the concentration of the listed chemical is at or below the limit, then the mixture will be automatically exempted and treated as a non-regulated chemical mixture. The Table also gives conditions for calculating the concentration limit.

The concentration limits are being finalized as proposed, except those for the chemicals benzaldehyde, anthranilic acid, and phenylacetic acid. The concentration limits for these three chemicals are being increased from the limits which were proposed.

One comment, which DEA received in response to the NPRM, informed DEA that there are a significant number of chemical mixtures in anthranilic acid and phenylacetic acid that could be regulated at the proposed concentration limit of 20 percent. Since DEA determined that these chemical mixtures do not pose a significant risk of being diverted, the DEA is increasing the concentration limit to 50 and 40 percent for anthranilic acid and phenylacetic acid, respectively. The comment also suggested increasing the concentration limit for benzaldehyde from 35 percent to 85 percent. However, the DEA determined that chemical mixtures containing greater than 50 percent benzaldehyde are at risk of diversion. Therefore, in order to

minimize the risk of diversion and provide the maximum amount of regulatory relief, the concentration limit for benzaldehyde is being finalized at 50 percent (for a discussion see Part II Comment Section 11. Exempt Formulations Used as Flavor and Fragrances).

b. Exemption by Category

Two categories that were originally proposed as exempt categories of chemical mixtures are distributions to waste disposal facilities and completely formulated paints and coatings. These categories may contain chemical mixtures that have listed chemical(s) above the established concentration limits. However, DEA believes that chemical mixtures in these categories are not likely to be diverted.

Based on comments to the NPRM, DEA modified these categories from those originally proposed. The proposed category that includes transportation of chemical waste has been modified to include chemical mixtures intended for recycling. Added are distributions to waste recycling facilities that have a ''paper trail'' as required by the United States Environmental Protection Agency.

The category of paints and coatings is modified to make it clear that inks are included in the category. Inks were intended to be included, however, a comment pointed out that the inclusion of inks could be overlooked under the proposed wording. A comment raised concern over distributions of multiple-component paint systems, which are not included in this category because they are not completely formulated. The DEA agrees that multiple-component paint systems are not likely to be diverted in domestic and import transactions. DEA is introducing an interim rule that addresses this concern and provides regulatory relief for chemical mixtures that are not at risk of diversion (see below).

c. Introduction of A New Category of List II Chemical Mixtures as an Interim Rule

Based on comments and DEA's analysis of the potential for diversion, this Final Rule also adds a new exemption category. Comments informed DEA of a significant number of distributions that may not be exempt under the proposed regulations. DEA determined that certain solvent based mixtures involving silicon-based products, paint-related materials, and other solvent-based chemical mixtures containing acetone, ethyl ether, 2-butanone, and toluene are not likely to be diverted domestically. These solvent chemicals are mostly a concern because they are used in cocaine and heroin processing, which occurs outside the United States. These chemical mixtures pose a risk of diversion for international transactions for which the requirement of 21 U.S.C. 802(39)(A)(v) is not met.

Therefore, DEA is creating a new exemption category for these mixtures. Domestic and import transactions in chemical mixtures that are regulated solely due to the presence of the List II solvent chemicals acetone, ethyl ether, 2-butanone, or toluene are removed from the definition of a regulated transaction by adding a new paragraph to 21 CFR 1310.08. Methyl isobutyl ketone, also a List II solvent chemical, is not included because domestic and import transactions in that chemical have already been excluded from the definition of a regulated transaction at 21 CFR 1310.08.

DEA is exempting domestic and import transactions in these chemical mixtures under 21 CFR 1310.08 pursuant to 21 U.S.C. 802(39) (A) (iii) because regulation of such transactions has been determined to be unnecessary for the enforcement of the CSA. DEA determined that there is not a significant risk of domestic diversion for these chemical mixtures. However, exports of these chemical mixtures could have significant potential for diversion. Therefore, these chemical mixtures, unless otherwise exempt, are subject to the export requirements of the CSA. Mixtures containing these List II chemicals will not qualify for automatic exemption if the mixture also contains another listed chemical above its concentration limit.

This new exemption (for domestic and import transactions in chemical mixtures containing the List II chemicals acetone, ethyl ether, 2-butanone, and toluene) was not discussed in the original NPRM. Therefore, this exemption will be implemented on an interim basis with opportunity for public comment. DEA is soliciting comments only on this portion of this final rule. After close of this comment period, DEA will publish a Final Rule in the **Federal Register** to inform interested persons if changes are needed or if this regulation will be adopted as written.

Other Actions Taken in This Rulemaking

In addition, other modifications to the original proposed regulations are being made. All references to the American Society for Testing Materials have been removed and the manufacturers are being allowed to determine the unit of measurement in calculating the concentration limit for liquid chemicals. These modifications were suggested in the comments and DEA agrees that they should be implemented.

Chemical Mixture Issues Not Being Addressed in the Rulemaking

a. Iodine

DEA received comments that chemical mixtures containing seven percent iodine are being diverted for the illicit manufacture of methamphetamine. Methamphetamine is an addictive Schedule II controlled substance and is the primary controlled substance clandestinely produced in the United States. It is regarded by DEA as a major threat to public health and safety.

DEA proposed a 20 percent concentration limit for iodine. This proposed amount is consistent with the proposed concentration limit for other listed chemicals that are used as reagents, as is iodine. Prior to the publication of the NPRM and while DEA was formulating the proposed regulations, seven percent iodine chemical mixtures were not a concern to law enforcement. Although DEA theorized that seven percent iodine solutions have the potential to be diverted, DEA lacked sufficient evidence to show that these chemical mixtures were being diverted prior to establishing the proposed concentration limit.

In addition to information obtained from law enforcement, public sources, and communication with the regulated community, DEA relies on comments to the NPRM to help establish regulations. DEA was informed that seven percent iodine chemical mixtures are being used in the illicit manufacture of methamphetamine. The proposed concentration limit of 20 percent is high relative to the concentration of iodine contained in mixtures used by traffickers. The approach of the proposed rule dictates that the concentration limit be lowered to assure that chemical mixtures desirable to traffickers are not automatically exempt. Persons who may not have commented on the 20 percent concentration limit may have comments on this relatively lower concentration limit. In order to ensure that the public has adequate opportunity for comment, the DEA is addressing issues relating to the regulation of iodine chemical mixtures in a separate NPRM.

b. Ephedrine Alkaloids

In a separate final rule (68 FR 23195, May 1, 2003), DEA finalized those portions of the NPRM pertaining to the

six List I chemicals ephedrine, N-methylephedrine, N-methylpseudoephedrine, norpseudoephedrine, phenylpropanolamine, and pseudoephedrine. Like the approach taken in this rulemaking, that Final Rule established a concentration limit for each of the above List I chemicals. The exempt category of harvested plant material was also finalized in that rulemaking.

c. Gamma-butyrolactone (GBL) and Phosphorus-Related Compounds

This rulemaking does not address the List I chemicals gamma-butyrolactone (GBL), red phosphorus, white phosphorus, or hypophosphorous acid and its salts. When the NPRM ''Exemption of Chemical Mixtures'' was published, they were not listed chemicals. Therefore, regulations to exempt their chemical mixtures were not proposed. DEA will address provisions concerning GBL and the above phosphorus chemicals in separate **Federal Register** publications.

To that end, on July 19, 2002, DEA published an Advance Notice of Proposed Rulemaking soliciting comments from the regulated industry regarding chemical mixtures containing GBL (67 FR 47493; corrected at 67 FR 53842, August 19, 2002; corrected at 67 FR 56776, September 5, 2002). DEA also published an Advance Notice of Proposed Rulemaking soliciting industry comment regarding chemical mixtures containing listed forms of phosphorus (68 FR 4968, January 31, 2003). Based on comments received from these publications, DEA will develop regulations concerning chemical mixtures containing GBL and the phosphorus chemicals.

II. Comments Received Regarding the Proposed Regulations

DEA received fourteen comments in response to the NPRM which was published September 16, 1998 (63 FR 49506). Five comments were from industry related membership organizations, three from law enforcement organizations, and the remaining from commercial interests.

Comment Summary

In general, the comments supported efforts by DEA to regulate chemical mixtures that have potential use to drug traffickers. Some comments requested that DEA exempt an additional category or increase some concentration limits. Comments also suggested that mixtures be exempted based on the type of distribution. Other comments requested clarification or suggested ways to ease compliance.

Specific Comments

1. *Reference to the American Society for Testing Materials (ASTM):* ASTM is a not-for-profit organization that develops test methods, and other criteria, with application to 130 areas. Reference to ASTM was made in the NPRM section that proposed the exemption of paints/coatings. That section stated that a paint/coating would be exempt if, among other things, it met the ASTM specifications for the product. This statement was included to help authenticate the product. Authenticity is desired by DEA to prevent this category from being used by traffickers as a loophole. However, DEA was informed that such a requirement is not practical.

Although the manufacturer can use some test methods to insure quality control, the methods are not definitive in qualifying a product. Not all paints/coatings are necessarily subject to these test methods in order to be marketed as an authentic product.

DEA was also informed that ASTM standards are not written to cover all applications. Some products can have unique applications where ASTM standards are not applicable. Therefore, in response to the comments, DEA is removing all references to the ASTM requirement. This action does not alter the basic definition of ''completely formulated,'' which determines whether such products are automatically exempt.

2. *Request to exempt small container transactions:* Three persons suggested that DEA exempt chemical mixtures based on container size. One comment requested that DEA consider a minimum container volume limit to which the rule does not apply. The commenter questioned whether the rule applies to a 1-ml vial or a 3-ounce tube. A second comment suggested that mixtures of List II solvents in containers of five gallons or less be exempt from regulation. A third comment suggested that transactions in 55-gallon size containers and less should be exempt.

DEA has considered the request to exempt transactions of regulated chemicals based on container size. DEA determined that traffickers have and could divert regulated chemicals if packaged in small containers. Therefore, an exemption based on container size will not be added.

DEA regulates transactions of chemicals that are desirable to traffickers, in part, by establishing thresholds. Thresholds are established so that records do not have to be maintained for certain transactions, *i.e.*, those below the threshold to a single customer within a calendar month. The thresholds for export of the List II solvent chemicals acetone, ethyl ether, 2-butanone, methyl isobutyl ketone, and toluene are considered large enough that distributions in small container sizes are not likely to be above the established threshold.

The threshold is meant to allow smaller volume distributions without the imposition of regulatory controls. However, the threshold can be easily reached using gallon size containers, including five and 55-gallon containers. DEA determined that adopting this suggestion would result in unlimited non-regulated export of chemicals desired by traffickers, especially those chemicals desired by cocaine traffickers.

3. *Request to adopt a single concentration limit for List II chemicals:* Three comments requested that List II chemicals be assigned a single concentration limit of 35 percent. They believed this would allow for better compliance and management of inventory by simplifying the process.

DEA proposed that the List II solvent chemicals, which have the same basic application, be assigned the same concentration limit. The chemicals acetone, ethyl ether, 2-butanone, methyl isobutyl ketone, and toluene all function as solvents. These chemicals have been identified to be responsible for the greatest number of List II chemical mixtures, some of which may be regulated. This group of chemicals already has been assigned a single concentration limit of 35 percent. Thus, the argument to ease compliance with a uniform concentration limit is addressed by the single value for these chemicals having the same basic application.

The chemicals acetic anhydride and benzyl chloride can be considered precursors while hydrochloric acid, iodine, and sulfuric acid function as reagents. Except for iodine, which is being addressed in a separate NPRM, these are assigned the single concentration limit of 20 percent. Potassium permanganate, also a reagent, is assigned the concentration limit of 15 percent. The limit is lower for this chemical because DEA has not identified any legitimately produced chemical mixture containing potassium permanganate greater than 15 percent.

After careful consideration, DEA decided not to change the concentration limit for all List II chemicals to 35 percent. Concerns regarding compliance are mostly addressed because the concentration limits are the same for List II chemicals that have similar functions. In addition, other comments

have raised the issue of iodine and hydrochloric acid as having application to the manufacture of illicit substances at a lower concentration than the proposed concentration limit.

4. *Request to allow companies to choose the unit of measure to calculate the percent concentration:* Two comments suggested that each manufacturer should be allowed to determine the unit of measurement to use when calculating the percent concentration. There appears to be no commercial standard practice that predisposes that a chemical is measured by weight or by volume when formulating a mixture. These persons are concerned about the possible administrative impact of forcing manufacturers to convert existing and extensive records and chemical record systems.

The amount of chemical present in a mixture can vary depending on the unit used to measure the chemical when formulating. Chemicals can be measured in units of weight or volume. The numerical values of weight and volume for chemicals are not usually equal. Therefore, a mixture reporting the concentrations of a chemical can actually contain different amounts of the chemical, depending on whether the concentration is based on weight or volume.

The comments informed DEA that some manufacturers might already have procedures in place to calculate the concentration. They state that converting from one unit to another is burdensome. DEA has considered this and decided that manufacturers should determine the unit of measure when formulating liquid mixtures. Therefore, a formulation containing liquid chemicals may have a concentration based on the volume or the weight of the chemicals contained.

DEA determined that accurate measurement of solids and gases by the unit of volume is not practical. Therefore, solids and gases should be calculated by unit of weight. The ''Table of Concentration Limits'' is being amended to reflect this modification.

5. *Request for clarification of issues relating to internal transfer and research and development:* Two persons requested clarification on issues of internal transfers and research and development. A third person asked whether research and development activities are exempt from this rule.

Chemical mixtures that do not qualify for automatic exemption are regarded and treated like listed chemicals. The term ''regulated transaction'' as defined in 21 U.S.C. 802(39), excludes ''a domestic lawful distribution in the usual course of business between agents or employees of a single regulated person.'' Therefore, such internal transfers are not regarded as regulated transactions. However, one must understand what a regulated person is to understand what transactions are regulated.

The definition of a ''regulated person'' is given in 21 U.S.C. 802(38) and means a person who manufactures, distributes, imports, or exports a listed chemical. The term ''distribute'' and ''distributor'' are defined in 21 U.S.C. 802(11). By definition, a distribution occurs when a listed chemical is delivered while a distributor is the person who makes the delivery.

21 U.S.C. 822(e) requires that each site which handles a List I chemical must have a separate registration. Each registered location is regarded as a ''regulated person.'' A distribution of List I chemicals between separate locations, even if owned by the same person, fulfills the definition in 21 U.S.C. 802(11). Therefore, above threshold distributions of List I chemicals between separately registered sites are regulated transactions as defined in 21 U.S.C. 802(39).

However, different locations that do not require separate registration are regarded as a single ''regulated person'' if owned by a single business. Because separate site registration for handling List II chemicals is not required, distributions of List II chemicals between sites owned by a single person are not regulated transactions.

The CSA does not include provisions that exempt the distribution of listed chemicals if associated with research and development. If a regulated mixture is distributed at or above threshold quantities, even for the purpose of research and development, the transaction is regulated.

6. *Request for publication of Chemical Abstract Service numbers for listed chemicals:* Two persons requested that Chemical Abstract Service (CAS) numbers be published for listed chemicals in the ''Table of Concentration Limits.'' The commenter stated that CAS numbers are used worldwide by industry and should be listed to simplify the identification of listed chemicals.

Although the CAS numbers are used throughout industry and specific to a chemical, DEA believes that publishing these numbers in the Code of Federal Regulations (CFR) may not be beneficial. CAS numbers are specific to a given chemical. If a chemical can exist in the form of a salt, for example, there is a separate CAS number for each form of the salt. Several listed chemicals include their salts, esters, optical isomers, and salts of optical isomers. All of these variations have individual CAS numbers. DEA believes it is not practical to list all such numbers, as the list will be extensive and possibly non-inclusive. Listing only the CAS numbers for the specifically named listed chemicals may mislead some to believe the list is all-inclusive. Therefore, DEA has decided not to publish CAS numbers in the CFR.

7. *Request for category exemption of multiple-component paint systems:* DEA proposed the exemption of paints/coatings only if the product is ''completely formulated.'' ''Completely formulated'' is defined in the proposed rule as ''only those formulations that contain all the components of the paint/coating for use in the final application without the need to add any additional substance except possibly a thinner.''

DEA proposed the exemption of completely formulated paints/coatings because these products are complex, high density mixtures having several components, including pigments, binders, curing agents, and other chemicals in a single system. The numerous additives that make up a substantial bulk of the formulation deter the use of these mixtures in an illicit operation. In addition, completely formulated paints cure upon exposure to air or heat, rendering them unusable by traffickers.

One comment argued that some paints actually consist of multiple components. Multiple-component paint systems consist of one or more separate formulations of hardeners, activators, catalysts, polymeric material, pigments, accelerators, solvents, or other components. A single component may contain one or more of these ingredients mixed, suspended, emulsified, dissolved, or somehow formulated into a chemical mixture containing a List II chemical(s). The List II chemicals are typically solvent chemicals in these formulations. The components are kept separate because once mixed, the paint begins to cure. Therefore, they are mixed just prior to application. The comment claimed that the use of any one of these component mixtures in an illicit operation is as difficult as using a completely formulated paint.

DEA was informed that multiple-component paint systems are a predominant technology used in the automobile refinishing market. There are approximately 60,000 such body shops in the United States; each one engages in a large number of domestic transactions each year. The mixtures they utilize may contain one or more of the List II solvent chemicals acetone,

ethyl ether, 2-butanone, methyl isobutyl ketone, and toluene.

DEA has not found significant examples of diversion of these chemical mixtures domestically or through imports. However, traffickers in other countries have used related formulations. Therefore, DEA will exempt domestic and import distributions of mixtures in the List II solvent chemicals acetone, ethyl ether, 2-butanone, and toluene from the definition of ''regulated transaction.'' Such an exemption for domestic and import distributions of methyl isobutyl ketone already exists under 21 CFR 1310.08.

This exemption will not apply if the mixture contains a List I chemical or a List II chemical (other than acetone, ethyl ether, 2-butanone, methyl isobutyl ketone, or toluene) above its established concentration limit. This category exempts chemical mixtures used by different industries, not only those associated with paints and coatings. Therefore, it will be included separately from the category of fully formulated paints and coatings.

This new exemption (for domestic and import transactions in chemical mixtures containing the List II chemicals acetone, ethyl ether, 2-butanone, and toluene) was not discussed in the original NPRM. Therefore, this exemption will be implemented on an interim basis with opportunity for public comment. DEA is soliciting comments only on this portion of this final rule. Comments should be submitted on or before January 14, 2005. After close of this comment period, DEA will publish a notice in the **Federal Register** to inform interested persons if changes are needed or if this regulation will be adopted as written.

Although DEA is establishing this exemption on an interim basis, an alternative means to exempt multiple-component paint systems was supplied in this comment. It sets a concentration limit for both the solid component and for the listed chemical(s). The commenter suggested that a chemical mixture be exempt if it contains at least 10 percent by weight of solids, including resins, polymers, or film formers, and less than 65 percent cumulative weight of List II solvents.

Although the above suggestion addresses those concerned about multiple-component paint systems, it may only partially address similar concerns of other sectors. Also, a dual-exemption criterion that considers both the concentration of solids and the listed chemical may be confusing and difficult for both industry and law enforcement to implement. Therefore, DEA decided to create a new category, as explained above, to exempt a broader range of mixtures. The new exempt category is easily interpreted and is not limited to a single sector but all industries that may use these solvents in chemical mixtures.

A second comment suggested the inclusion of multiple-component paint systems in the category of exempt paints and coatings. The comment included suggested wording that is similar to the language proposed by DEA except that it includes, in addition to completely formulated paints, two-part systems. It is anticipated that perceived burdens incurred by regulating distributions of multiple-component paint systems will be addressed via the creation of the interim exemption of domestic and import transactions of the List II solvents discussed above.

8. *Silicone products as exempt mixtures:* One comment suggested that exempt mixtures should include silicone related products. These silicone products are manufactured for downstream customers who produce end products and could contain List II solvent chemicals. To exempt these products, the commenter suggested that the mixture meet three criteria: the mixture is produced and distributed (1) through sophisticated, well-established channels; (2) in accordance with recognized commercial specifications; and (3) for controlled end-use applications.

The comment did not elaborate on how to define these criteria or how to identify if a product is produced in compliance with these criteria. DEA concluded that these suggestions regarding the exemption of silicone products are overly subjective and open to interpretation.

In attempting to identify silicone products, DEA learned that silicone products cannot be clearly distinguished by the chemical content alone. Representative formulations submitted by this industry show concentrations of up to 99 percent listed chemical. The example formulations contain silicone material from less than 1 percent to 75 percent while some contain no silicone or other solid material. These silicone related chemical mixtures are similar to the multiple component paint systems discussed above in relation to their risk of diversion. DEA has determined that regulation of domestic and import transactions are not at significant risk of diversion.

DEA is establishing provisions, on an interim basis, to exempt all domestic and import transactions in the List II chemicals of concern to this industry (see above). Some export transactions in these mixtures are exempt via the established concentration limit. Therefore, DEA decided that there is no need to take additional action to exempt this category because most transactions in these mixtures are addressed in the interim portion of this rulemaking. Because the exemption is on an interim basis, this interest, as well as others, will have the opportunity to inform DEA whether this approach is suitable.

9. *Mixtures intended for recycling:* One comment stated that the exemption category that includes distributions of waste products to incinerators does not include distributions to recycling centers. The comment suggested including distributions to authorized waste recyclers and reprocessors under the category of exempt waste material. DEA agrees with this comment.

Waste materials were proposed as an exempt category provided there is documentation on U.S. Environmental Protection Agency (EPA) Form 8700–22 (Uniform Hazardous Waste Manifest) and the waste materials are being distributed to another person solely for the purpose of disposal by incineration. These mixtures include only those that are covered by EPA regulations and have a ''cradle to grave'' paper trail. Further, the exemption applies only to the extent that the Form 8700–22 is available for inspection and copying by DEA.

The comment cites Department of Transportation (DOT) regulation 49 CFR 172.205 to show that records are required for waste-recovery shipments. Examination of this section shows that DOT requires the same EPA Form 8700–22 that was proposed as a requirement for exemption of waste product. Therefore, the same ''paper trail'' is in place for distributions sent to incinerators or to recyclers. DEA agrees that distributions to recycling facilities should be included in the category that exempts distributions to incinerators. DEA is amending the language of Section 1310.12(d)(2) to expand the category to include distribution to recyclers as requested in the comment.

DEA proposed the exemption of distributions of waste material provided a ''paper trail,'' which is required by another agency, already exists. Exemption, if to a recycler or incinerator, is contingent on the existence of a hazardous waste manifest (EPA form 8700–22). It will be the generator's responsibility to maintain records if EPA does not already require a hazardous waste manifest.

Although a distribution to a recycling facility may not be a regulated

transaction, recovering a listed chemical from a chemical mixture in a recycling process satisfies the term ''manufacture'' as defined at 21 U.S.C. 802(15). However, this is not new to this rulemaking. Any person who performs a manufacturing operation, including the recovery of a listed chemical from a chemical mixture, has been bound to applicable regulations since their inception.

The comment also expressed concerns over distributions that are not required to have an EPA Form 8700–22 and, therefore, are not automatically exempt under this category. DEA decided not to categorically exempt all distributions for waste recycling or incineration. Such a category would include any combination of listed and non-listed chemical. DEA decided that such an exemption category could result in diversion of chemicals desirable to traffickers. Such distributions shall be regulated unless the transactions meet other exemption criteria.

10. *Clarification as to whether chemical mixtures are included in 21 CFR Part 1313:* One comment requested that DEA clarify whether the requirements governing the importation, exportation, transshipment and in-transit shipment of listed chemicals pursuant to 21 CFR Part 1313 apply to regulated chemical mixtures.

The commenter asserted that Part 1313 includes reference to ''listed chemicals'' but does not specifically include chemical mixtures. Therefore, the commenter concluded, mixtures of List II chemicals do not appear to be subject to import/export notification requirements.

DEA disagrees. A chemical mixture, if not exempt by regulation or the application process, is regarded and treated as a listed chemical pursuant to all provisions of the CSA. This includes provisions of 21 CFR Part 1313.

The term ''regulated transaction'' means ''a distribution, receipt, sale, importation or exportation of, or an international transaction involving shipment of, a listed chemical, or if the Attorney General establishes a threshold amount for a specific listed chemical, a threshold amount, including a cumulative threshold amount for multiple transactions * * * of a listed chemical * * *'' (21 U.S.C. 802(39)). The term excludes ''any transaction in a chemical mixture which the Attorney General has by regulation designated as exempt * * * based on a finding that the mixture is formulated in such a way that it cannot be easily used in the illicit production of a controlled substance and that the listed chemical or chemicals contained in the mixture cannot be readily recovered'' (21 U.S.C. 802(39)(A)(v)). The term ''chemical mixture'' is defined in 21 U.S.C. 802(40) as a combination of two or more chemicals, at least one of which is not a List I or List II chemical.

This rulemaking is finalizing regulations that identify those chemical mixtures that the Attorney General designates as exempt. Outside of those exemptions, distributions in chemical mixtures, including importation, exportation, transshipment, and in-transit shipment, are subject to the regulatory controls of the CSA that pertain to listed chemicals. This rulemaking establishes that chemical mixtures containing listed chemicals are treated as listed chemicals unless exempted by regulation.

11. *Request for exemption of formulations used as flavors and fragrances:* One commenter, representing both the Flavor and Extract Manufacturers Association of the United States and the Fragrance Materials Association of the United States (hereafter referred to as the flavor and fragrance industries), gave arguments as to why their mixtures should be exempt from regulatory controls. The commenter suggested that the flavor and fragrance industries be exempt by category. As an alternative, the commenter suggested that the concentration limits for benzaldehyde, anthranilic acid, and phenylacetic acid be increased.

The commenter stated that an industry exemption should be provided because of the manner in which the flavor and fragrance industry operates. The commenter stated that while manufacturers work closely with customers to develop the necessary flavoring or fragrance, routinely their formulations are unknown to the customer. The commenter asserted that traffickers would not know what to order because the trafficker would not know the mixture's composition. Additionally, the commenter stated that these mixtures are expensive because of developmental costs and therefore, they would not be a practical source of precursor chemicals. The commenter also stated that these mixtures are not sold to the public but only to manufacturers of foods and toiletries. In addition, the commenter claimed that the mixtures are complex formulations that make the extraction of listed chemicals, or direct use of the mixture impractical.

DEA agrees that legitimately traded, expensive, and chemically complex chemical mixtures, which are marketed under strict self-imposed practices, are at a lower risk of diversion. However, these conditions may not be universal to all that trade in these commodities. Therefore, DEA has decided that exempting these industries would create a loophole for traffickers to divert List I chemicals. Under a blanket exemption for these industries, any person could distribute any listed chemical they use without restriction.

The comment requested that, as an alternative to a category exemption, the concentration limits for benzaldehyde, anthranilic acid, and phenylacetic acid be set to 85, 50, and 40 percent, respectively. The concentration limits for these chemicals were proposed at 35 percent for benzaldehyde and 20 percent for anthranilic acid and phenylacetic acid. The concentration limit for benzaldehyde was proposed higher than the 20 percent proposed for most other precursor chemicals because benzaldehyde was known to be used by food flavoring manufacturers in higher concentrations than the other chemicals.

DEA weighed the degree of regulatory relief, as indicated in the comment, against the risk of diversion for the chemicals of concern to these industries. Based on the comments and an examination of sample formulations, DEA concluded that some, but not all, of the conditions requested in the comment could be put into regulation without significantly increasing the risk of diversion.

i. Concentration Limits for Anthranilic Acid and Phenylacetic Acid

The commenter indicated that these industries' formulations contain no more than 50 and 40 percent of anthranilic acid and phenylacetic acid, respectively, and that these formulations are not at risk of diversion. This was the only comment concerned with these List I chemicals. DEA has not identified these chemicals as being important in the formulation of other chemical mixtures. Formulations that use these chemicals are complex and not likely to be diverted. Considering these facts, DEA has decided to increase the concentration limits for benzaldehyde and anthranilic acid to 50 percent and phenylacetic acid to 40 percent.

ii. Increasing the Concentration Limit for Benzaldehyde

The commenter also requested that the concentration limit be increased to 85 percent for benzaldehyde. Benzaldehyde is used in clandestine operations to make the Schedule II controlled substances amphetamine, phenyl-2-propanone, and methamphetamine. It was once the chemical of choice in the synthesis of

methamphetamine. Currently, over 95 percent of the clandestine laboratories seized in the United States are methamphetamine laboratories. Although the precursor favored in the clandestine synthesis of methamphetamine has changed, the demand for methamphetamine and increased controls of the current precursor of choice is likely to contribute to increased diversion of benzaldehyde if it is not carefully regulated.

DEA considered increasing the concentration limit for benzaldehyde from the proposed 35 percent to the suggested 85 percent. However, benzaldehyde may be found in simpler formulations than those alluded to in the comment, either within the represented industries or other sectors. Increasing the concentration limit will impact all sectors of the chemical industry, including those conducting commerce with the public. Increasing the concentration limit to 85 percent could result in unrestricted trade in exempt mixtures useful to traffickers. DEA determined that traffickers would seek simpler formulations containing benzaldehyde at the suggested concentration limit if there are no regulatory controls governing their distribution. DEA regards an 85 percent concentration limit in benzaldehyde to be significantly high; such mixtures are at risk of diversion.

DEA re-examined the concentration limit for benzaldehyde in light of the comment from the flavor and fragrance industries and decided that increasing the concentration limit to 50 percent will not significantly increase the risk of diversion. The comment stated that the types of formulations containing benzaldehyde are as complex as those containing anthranilic acid and phenylacetic acid. DEA has not identified benzaldehyde chemical mixtures as being used prominently outside the flavor and fragrance industry. A 50 percent concentration limit is consistent with objectives of this regulation.

DEA recognizes that benzaldehyde is important to the food flavoring industry and sometimes found in formulations at a higher concentration than other List I chemicals. However, DEA decided that an 85 percent concentration limit is too high, especially in light of the fact that it is a chemical used in the illicit manufacture of methamphetamine, the primary illicit controlled substance manufactured in the United States.

The comment also expressed concerns regarding the exemption application process (Section 1310.13) and claimed that the application process is an impractical means to exempt these formulations because hundreds or thousands of new formulations are produced monthly and formulations are altered continuously. In addition, the industry resists revealing their formulations as required in the application, because they are closely guarded trade secrets.

There should be no concern over the need to reapply for each change in formulation or revealing details about a formulation. The application process is written to alleviate the need to reapply every time a formulation changes. A group of mixtures may be exempted within a single application. Formulations having identical function and containing the same listed chemical(s) can be part of the same group. However, not all formulations are required to have the same non-listed chemicals to be included in a group. This approach will eliminate the need for persons to reapply every time a formulation changes.

DEA will allow for partial disclosure in the application process of a complex chemical formulation. DEA has learned that formulations used by the food and flavoring industries sometimes contain several chemicals at a concentration of less than one-percent. DEA will accept an application without the need to reveal each chemical present at less than one-percent. DEA will work with the applicant to obtain enough information to make a decision while minimizing the amount of detail necessary to process the application.

DEA notes that information designated as confidential or proprietary will be treated accordingly. The release of confidential business information that is protected from disclosure under Exemption 4 of the Freedom of Information Act, 5 U.S.C. 552(b)(4), is governed by section 310(c) of the CSA (21 U.S.C. 830(c)) and the Department of Justice procedures set forth in 28 CFR 16.7. DEA has a longstanding history of protecting such information from unauthorized disclosure.

12. *Comment stating that mixtures of List II solvent chemicals are useful to traffickers regardless of the concentration of listed chemical:* One comment pointed out how chemical mixtures containing List II solvent chemicals can be useful to traffickers regardless of the concentration. The List II solvent chemicals are acetone, ethyl ether, 2-butanone, methyl isobutyl ketone, and toluene. They are referred to as solvent chemicals because they are liquids generally used to dissolve substances.

The comment argues that mixtures of these chemicals will have the same chemical properties that make the pure List II solvent chemicals desirable to traffickers. The reason for this is that different liquids are miscible (i.e. susceptible of being mixed) if they have similar chemical properties that are related to their behavior as solvents. The commenter stated that if they mix, the resultant blend must have chemical properties similar to the pure List II solvent chemical, otherwise, they would not mix in the first place. Therefore, the blend could possibly dissolve whatever the listed chemical could dissolve. Likewise, if the solvent properties of different liquids are dissimilar they may not mix when brought together.

A well-known example of this behavior is that of oil and water. The solvent properties for oil and water are different. Oil dissolves different substances than water. When brought in contact, they form separate layers. However, mixing water with vinegar, for example, causes the two liquids to blend as one. They have similar solvent properties. The resulting blend would be expected to dissolve whatever the water would dissolve.

The commenter stated that the same is true for the List II solvent chemicals. Mixing them with other liquids may cause separation or result in a single blend. If they blend, it means that the mixture has some liquid properties that are similar to the listed solvent chemical. However, the resultant blend is not exactly the same as the pure listed chemical.

DEA agrees with the comment in principle. However, the higher the concentration of listed chemical(s), the more likely it will be that the blend will more closely mimic the properties of the listed chemical(s). This means that not all mixtures containing List II chemical solvents are equally likely to be used in illicit laboratories. Thus, regulating all mixtures that contain any amount of a List II solvent chemical is unnecessary to reasonably prevent diversion. Further, solvent chemicals are mostly a concern because they are used in cocaine and heroin processing, which occurs outside the United States. Therefore, instead of regulating all chemical mixtures containing List II solvent chemicals, DEA will exempt all such domestic and import transactions containing the List II solvents acetone, ethyl ether, 2-butanone, and toluene from the definition of regulated transaction as discussed earlier. The List II chemical methyl isobutyl ketone is not included here because its transactions are already excluded. Because a chemical mixture regulated due to the presence of a List II solvent chemical is expected to mimic the

solvent properties of the listed chemical, the threshold will be calculated based on the amount of the entire mixture and not just the amount of listed chemical in the mixture.

13. *Comment stating that traffickers can use twenty-percent solutions of hydrochloric acid or sulfuric acid:* One comment mentioned that both hydrochloric and sulfuric acids are used to isolate methamphetamine. For this purpose, a 20 percent solution of either is sufficient to carry out an illicit manufacturing operation.

In response, DEA notes that domestic and import transactions in these acids have been excluded from the definition of regulated transactions pursuant to 21 CFR 1310.08. Only transactions to designated countries identified in that section are defined as regulated transactions. Those provisions also apply to mixtures of these chemicals. DEA notes that acids dissolved in water, alcohol solutions, or other pure solvents, are not regarded as chemical mixtures. Therefore, DEA decided not to lower the concentration limit for these acids.

14. *Comment stating that multifunctional formulations containing sulfuric acid should be an exempt category:* One comment requested that formulations containing sulfuric acid should be exempt when used in industrial applications. DEA regards this category as too broad and, if enacted, will create a loophole for unscrupulous persons to traffic in mixtures of sulfuric acid that could be used in illicit laboratories. Therefore, DEA has determined that this category is inappropriate for exemption.

These types of mixtures, if not useful to traffickers, may be exempt pursuant to Section 1310.13 (i.e. the application process). Several such mixtures may be exempt as a group under a single application, provided the different formulations have the same basic function. DEA notes that domestic transactions in sulfuric acid and, therefore, its mixtures, are not regarded as regulated transactions pursuant to Section 1310.08(a). Section 1310.08(b) regulates only above threshold transactions to certain designated countries. In addition, if a person consumes a chemical mixture, then that person is an end user. End users are not regarded as regulated persons and are not subject to chemical regulatory controls.

15. *Comment expressing concern that iodine concentration limit is high and does not capture mixtures being used by traffickers:* One comment believes that the proposed rule does not adequately address the regulation of iodine. The DEA has decided to address iodine issues under separate rulemaking.

The comment points out that the most common method for the production of methamphetamine on the West Coast utilizes seven-percent iodine solution. The comment states that non-traditional customers purchasing large quantities of seven-percent iodine solution have inundated retailers in Oregon, Washington, California, and Louisiana. Another comment stated that clandestine laboratories often use either iodine crystals or a seven-percent iodine tincture as a source for iodine crystals.

Seven-percent iodine solution and tincture are regarded as chemical mixtures subject to this final rule but are a viable source of iodine crystals. Iodine crystals can be readily extracted from these chemical mixtures and used in the illicit manufacture of methamphetamine or amphetamine. DEA agrees that regulatory action is necessary to prevent the illicit use of iodine readily obtained from these sources.

At the time that the NPRM was being drafted, the DEA did not regard iodine chemical mixtures as an important source of iodine crystals. Since publication of the NPRM, the use of iodine chemical mixtures as a source for iodine crystals increased dramatically. The El Paso Intelligence Center (EPIC) maintains a database on clandestine laboratories seized by Federal, State, and local law enforcement agencies. Although the database does not account for all seizures in clandestine laboratories, it serves as an indicator of what is being used by traffickers.

In 1998, the year in which the NPRM was published, EPIC reported 10 incidences of iodine tincture out of 1,485 for all sources of diverted iodine found in illicit methamphetamine laboratories. In 1999, 2000, 2001, and 2002, the number of iodine tincture seizures compared to the number of all forms of diverted iodine reported by EPIC is 71 out of 2,888; 397 out of 3,432; 1,147 out of 4,734; and 1,619 out of 4,921, respectively. These statistics show that iodine tincture is a significant source of iodine crystals for the illicit manufacture of methamphetamine.

Based on the comments to the NPRM and the documented diversion of certain chemical mixtures containing iodine, the DEA determined that the proposed concentration limit for iodine is relatively high compared to the concentration found in chemical mixtures useful to traffickers. To address adequately the diversion of iodine, DEA must consider new approaches other than what was proposed. Therefore, the regulation of iodine chemical mixtures is being addressed in a separate NPRM. This will give persons an opportunity to comment on any approach DEA suggests.

16. *Request for exemption of crime labs from quantitative analysis of mixtures:* One comment stated that city and county laboratories in California perform qualitative analysis for only controlled substances. The commenter requested that local crime laboratories be exempt from requirements to analyze the contents of non-controlled substances or reporting of mixtures.

DEA has no role in determining such policy. How state and local crime laboratories handle their analysis is based on their own policy. Because this rulemaking does not impose mandatory testing, exemption is not necessary.

17. *Request for exemption of adhesive intermediates under the category of paints/coatings:* One comment questioned whether solutions that are intermediates for the manufacture of adhesives are exempt under the category of paints and coatings. These adhesive intermediates are formulated as a vehicle for further additions of chemical ingredients that will eventually form an adhesive. DEA determined that if these solvent mixtures contain listed chemicals above the concentration limit, they are regarded as regulated chemicals. They are not ''fully formulated'' as required to be exempt under the category of paints and coatings and, therefore, not automatically exempt.

DEA decided not to exempt all chemical mixtures that are used to form adhesives because that would include solvent systems containing listed chemicals in any concentration. Unscrupulous persons could then distribute solvent blends rich in List II chemicals to traffickers unchecked. Adhesive mixtures that contain listed chemicals are regarded as exempt when they are completely formulated and have less risk of diversion. If not exempt, distributions are regulated only if distributed at or above threshold quantities.

DEA does not impose recordkeeping or reporting requirements for listed chemicals that are consumed in a manufacturing process (21 CFR 1310.03(a)). If the blend is converted to an adhesive on-site, then transactions in it are not regulated and, because the listed chemical is consumed, recordkeeping and reporting requirements are not required. In addition, as stated previously, DEA is exempting, on an interim basis, domestic and import transactions of mixtures containing the List II solvent chemicals that are a concern to this interest.

18. *Inks as part of the category of paints and coatings:* One comment requested the inclusion of inks in the category of paints and coatings by changing the category to paints, coatings, and inks. The commenter expressed concerns that the public will not recognize inks as being within the category of paints and coatings.

DEA recognizes that inks may be overlooked within Section 1310.12(d)(2), which identifies the category of paints and coatings as being exempt chemical mixtures. It was the intention of DEA to have inks included in this category. The preamble of the original NPRM (63 FR 49510) states that completely formulated inks are included in this category.

DEA determined that adding inks as a new category in addition to the existing category of paints and coatings is not appropriate. Inks are already included within the category of coatings. This situation will be corrected by adding a sentence to section 1310.12(d)(3): ''Included in this category are clear coats, topcoats, primers, varnishes, sealers, adhesives, lacquers, stains, shellacs, inks, and temporary protective coatings.'' In this way, all products intended to be included in the category of paints and coatings will be apparent.

19. *Request for allowance of a concentration variation of 2 percent absolute and 10 percent nominal:* One comment suggested that DEA allow a plus or minus concentration range of 10 percent nominal and 2 percent absolute rather than require a new application for exemption for each and every mixture. This range is to reflect variation in raw material and inaccuracies in the manufacturing process.

The exemption application process already allows for a range of concentrations without the need to reapply, as long as this concentration range is specified in the approved application. Therefore, the suggested variation is not necessary to prevent the need for reapplication. (Please note, however, that any concentration greater than the established range for exemption would cause the mixture to be subject to the regulatory provisions of the CSA.)

For non-exempt mixtures, the concentration limit (as specified in the Table of Concentration Limits) is established as a maximum concentration of listed chemical that a chemical mixture may contain to be automatically exempt. Mixtures containing more than this established limit are regarded by DEA as regulated chemicals. Manufacturers that produce chemical mixtures having the listed chemical near the concentration limit are responsible for knowing whether the actual concentration exceeds the limit.

III. Final Regulatory Actions: Individual Discussion for Each Listed Chemical

1. Chemical Mixtures Containing List I Chemicals

List I chemicals compose the largest number of listed chemicals, but only a few have been identified that are routinely used in chemical mixtures. Mixtures containing those List I chemicals are utilized by a small number of industries. DEA identified food flavoring manufacturers, fragrance manufacturers, and a segment of the dietary supplements industry as the main commercial sectors that utilize mixtures containing List I chemicals.

The food flavoring and fragrance manufacturing sectors handle most chemical mixtures containing List I chemicals being addressed in this rulemaking. The chemicals of concern to these interests, at the proposed concentration limits, are benzaldehyde, anthranilic acid, and phenylacetic acid. None of the remaining List I chemicals were mentioned in the comments, except those associated with some dietary supplements. The comments pertaining to dietary supplements containing Ephedra were addressed in a separate final rule (68 FR 23195, May 1, 2003).

Only one comment addressed issues relating to the List I chemicals benzaldehyde, anthranilic acid, and phenylacetic acid. This comment was submitted by an industry group representing both the Flavor and Extract Manufacturers Association of the United States and the Fragrance Materials Association of the United States (food flavoring and fragrance manufacturing sectors).

DEA originally proposed concentration limits of 35 percent for benzaldehyde, and 20 percent for anthranilic acid and phenylacetic acid. The concentration limit for benzaldehyde was proposed higher than the 20 percent proposed for most other precursor chemicals because DEA was aware that the food flavoring manufacturers used benzaldehyde in complex formulations not likely to be diverted. The comment from this interested party expressed the opinion that their formulations are not likely to be diverted even if the concentration limits for benzaldehyde, anthranilic acid, and phenylacetic acid are set at 85 percent, 50 percent, and 40 percent, respectively.

After a thorough review of the comments, DEA is finalizing concentration limits of 50 percent for benzaldehyde, 50 percent for anthranilic acid and 40 percent for phenylacetic acid. The DEA concluded that chemical mixtures containing lower concentrations of these chemicals do not present a significant risk of diversion. (For a discussion on what DEA considered in order to exempt this interest, see under Comments.)

This concentration limit is expected to exempt the majority of List I chemical mixtures identified by DEA. Most, if not all, mixtures in anthranilic acid and phenylacetic acid are expected to be exempt because available products are formulated whereby they are not useful to traffickers.

No comments were received concerning other List I chemicals being addressed in this rulemaking. Therefore, DEA concludes that the concentration limits proposed for the remaining List I chemicals are not a major concern to industry. Finalizing regulations based on the proposed concentration limits for these chemicals is not expected to increase significantly the number of new registrants. Chemical mixtures that do not qualify for automatic exemption can be considered for exemption based on the application process (21 CFR 1310.13; finalized at 68 FR 23195).

2. Chemical Mixtures Containing List II Chemicals

The List II chemicals being addressed in this rulemaking are acetone, ethyl ether, 2-butanone (methyl ethyl ketone), methyl isobutyl ketone, toluene, acetic anhydride, benzyl chloride, hydrochloric acid, sulfuric acid, potassium permanganate, and iodine. The first five chemicals are used as solvents and, based on the comments, are responsible for the majority of chemical mixtures addressed by this rulemaking. The chemicals acetic anhydride and benzyl chloride have limited use as solvents and have not been the subject of any comment. The remaining List II chemicals are reagents. DEA received comments on iodine, hydrochloric acid, and sulfuric acid. Iodine is being addressed under a separate rulemaking. The types of mixtures containing the remaining chemicals are limited and will not significantly add to the number of newly regulated transactions. There were no comments received for mixtures containing potassium permanganate.

a. The List II Solvent Chemicals

The List II solvent chemicals acetone, ethyl ether, 2-butanone, methyl isobutyl

ketone, and toluene are mostly a concern to DEA because of their use in the illicit production of cocaine. Suspicious shipments of mixtures containing List II solvents to cocaine producing areas have been identified by DEA. Additionally, diversion of chemical mixtures for the illicit production of cocaine in foreign countries has been established by DEA.

DEA continually monitors the chemical composition of seized cocaine hydrochloride samples. The DEA laboratory system is able to detect the trace quantities of solvents present in seized cocaine hydrochloride, which is a ''street form'' of cocaine. Such solvents are utilized in the final stage of cocaine production whereby cocaine base is converted to cocaine hydrochloride. Recent data indicates that a broader range of solvents and solvent combinations are being used in cocaine processing. This laboratory data supports intelligence information that chemical mixtures are used in the illicit production of cocaine hydrochloride.

DEA is aware of chemical mixtures containing List II solvent chemicals and solid material. The solids may be dissolved, suspended, emulsified, or in some way formulated into the liquid component. These mixtures are used by different industries to formulate silicones, paints, adhesives, polymers, and various related materials. DEA realizes that, in general, mixtures formulated with solids will not likely be used ''as is'' in the production of a controlled substance, including cocaine. However, recovery of the listed chemical (*e.g.*, distillation) may allow the mixture to be used by traffickers. Traffickers, especially those involved in the illicit production of cocaine, are known to recycle solvents by distillation.

After considering all comments, DEA has decided to exempt domestic and import transactions of all mixtures containing acetone, ethyl ether, 2-butanone, and toluene, unless they contain other listed chemicals above the concentration limit.

Since the NPRM did not discuss this exemption for domestic and import transactions, the public did not have the opportunity to comment on the exclusion of these transactions from the definition of a regulated transaction. To avoid unnecessary burdens on affected companies during the pendency of proceedings in this matter, DEA has decided to implement this exemption on an interim basis, with a request for comments. DEA will then publish a final rulemaking regarding this exemption after a review of such comments. (See Section V for further discussion of this interim exemption). Because of their identified potential for use in illicit cocaine production, as discussed above, this rulemaking will not automatically exempt by regulation export transactions in these mixtures.

b. The List II Chemicals Hydrochloric Acid and Sulfuric Acid

Distributions of hydrochloric acid (except domestic distributions of anhydrous hydrogen chloride) and sulfuric acid are regulated only as exports to certain geographical regions. Domestic transactions in sulfuric acid and hydrochloric acid (except anhydrous hydrogen chloride) are excluded from the recordkeeping and reporting requirements of the CSA pursuant to 21 CFR 1310.08(a). Therefore, their chemical mixtures are also excluded.

Anhydrous hydrogen chloride, which is regulated domestically, has not been identified as part of any chemical mixture. These chemicals are used in synthetic chemistry and to stabilize materials in solution, both in legitimate industries and illicit operations. Formulations of sulfuric acid have been identified that are used in papermaking, treatment of industrial water cooling systems, and for treating oil wells.

Although one comment informed DEA that chemical mixtures at the proposed concentration limit of 20 percent for hydrochloric acid could be used in the illicit production of methamphetamine, DEA is not lowering this concentration limit. Methamphetamine production is mostly a domestic concern while domestic transactions in hydrochloric acid are not regulated.

DEA regards any concentration of hydrogen chloride dissolved in an inert carrier, such as water or alcohol, as a regulated chemical under the heading of hydrochloric acid. The 20 percent concentration limit pertains to hydrochloric acid mixed with an additional non-listed chemical. The concentration limit is determined by taking the weight of hydrogen chloride in the mixture and does not include the weight of the carrier solvent.

DEA received only one comment on mixtures containing sulfuric acid. Only exports to South American countries and Panama above threshold are regulated transactions. The comment did not state if their mixtures are for export to these specific regions. The mixtures, as described in the comment, may be suitable for a group exemption by the application process. DEA concludes that newly regulated mixtures containing hydrochloric acid or sulfuric acid will be minimal at the concentration limits proposed.

c. The List II Reagent Chemicals Iodine and Potassium Permanganate

Iodine and potassium permanganate are List II chemicals that function as reagents. Reagents are chemicals that cause, or help to cause, a chemical reaction to occur. Iodine and potassium permanganate are important in methamphetamine and cocaine production, respectively.

Iodine is found in a variety of formulations. Strong iodine solution and strong iodine tincture contain seven-percent iodine and are regarded as chemical mixtures. DEA proposed a 20 percent concentration limit for iodine but was informed, by comment, that seven-percent solutions are being diverted for their iodine content. In addition, DEA has documented the use of seven-percent iodine mixtures as a source for iodine crystals in clandestine methamphetamine production. Chemical mixtures containing iodine are being addressed under a separate NPRM to allow adequate comment on the regulation of iodine desirable to traffickers.

DEA has not identified mixtures of potassium permanganate being diverted for illicit drug production or being formulated in a concentration greater than the proposed 15 percent. DEA has determined that legitimately produced chemical mixtures containing less than 15 percent potassium permanganate do not have a significant potential for diversion. Therefore, the concentration limit for potassium permanganate was proposed to be 15 percent. No comments were received to suggest that there are any chemical mixtures containing greater than 15 percent potassium permanganate.

d. The List II Precursor Chemicals Acetic Anhydride and Benzyl Chloride

The List II chemicals acetic anhydride and benzyl chloride may be regarded as precursor chemicals. Precursors are substances that are chemically modified to become part of the final product. Acetic anhydride is important in the production of heroin while benzyl chloride can be used to make methamphetamine. These chemicals also have limited use as solvents. No comments were received regarding these chemicals and DEA has not identified them as being routinely used in chemical mixtures. The concentration limit for acetic anhydride and benzyl chloride was proposed to be 20 percent and is being finalized at the 20 percent limit.

IV. Final Rule Provisions

a. Specific Requirements That Will Apply to Regulated Chemical Mixtures Containing List I Chemicals Upon Publication of This Final Rule

A chemical mixture that is regulated because it contains a List I chemical will be treated as a List I chemical. Transactions that meet or exceed the cumulative monthly threshold for the listed chemical shall be regulated transactions. Persons interested in handling a regulated mixture must comply with the following:

Registration. Any person who manufactures or distributes a regulated mixture, or proposes to engage in the manufacture or distribution of a regulated mixture containing a List I chemical, shall obtain a registration pursuant to the CSA (21 U.S.C. 822). Regulations describing registration for list I chemical handlers are set forth in 21 CFR part 1309.

Separate registration is required for retail distribution, non-retail distribution, importing, and exporting. A separate registration is required for each principal place of business at one general physical location where List I chemicals are distributed, imported, or exported by a person (21 CFR 1309.23). Effective February 14, 2005, any person distributing, importing, or exporting any amount of a regulated mixture will become subject to the registration requirement under the CSA. DEA recognizes, however, that it is not possible for persons who are subject to the registration requirement to immediately complete and submit an application for registration and for DEA to immediately issue registrations for those activities. Therefore, in order to allow continued legitimate commerce in regulated mixtures, DEA is establishing in 21 CFR 1310.09 a temporary exemption from the registration requirement for persons desiring to engage in activities with regulated mixtures that are subject to registration requirements, provided that DEA receives a properly completed application for registration on or before February 14, 2005. The temporary exemption for such persons will remain in effect until DEA takes final action on their application for registration.

Any person whose application for exemption is subsequently rejected by DEA must obtain a registration with DEA. A temporary exemption from the registration requirement will also be provided for these persons, if DEA receives a properly completed application for registration on or before 30 days following the date of official DEA notification that the application for exemption has not been approved. The temporary exemption for such persons will remain in effect until DEA takes final action on their registration application.

The temporary exemption applies solely to the registration requirement; all other chemical control requirements, including recordkeeping and reporting, are effective on January 14, 2005. Therefore, all transactions of the chemical mixture will be regulated, if at or above threshold, while an application for registration or exemption is pending. This is necessary because not regulating these transactions could result in increased diversion of chemicals desirable to drug traffickers.

Additionally, the temporary exemption does not suspend applicable federal criminal laws relating to the regulated mixture, nor does it supersede state or local laws or regulations. All handlers of a regulated mixture must comply with applicable state and local requirements in addition to the CSA regulatory controls.

Records and Reports. The CSA (21 U.S.C. 830) requires certain records to be kept and reports to be made involving listed chemicals. Regulations describing recordkeeping and reporting requirements are set forth in 21 CFR 1310. A record must be made and maintained for two years after the date of a regulated transaction involving a List I chemical. Only a distribution, receipt, sale, importation, or exportation of a regulated mixture at or above the established threshold is a regulated transaction (21 CFR 1300.02(b)(28)).

Each regulated bulk manufacturer of a regulated mixture shall submit manufacturing, inventory and use data on an annual basis (21 CFR 1310.05(d)). Bulk manufacturers producing the mixture solely for internal consumption, *e.g.*, formulating a non-regulated mixture, are not required to submit this information. Existing standard industry reports containing the required information are acceptable, provided the information is readily retrievable from the report.

21 CFR 1310.05 requires that each regulated person shall report to DEA any regulated transaction involving an extraordinary quantity, an uncommon method of payment or delivery, or any other circumstance that causes the regulated person to believe that the listed chemical will be used in violation of the CSA.

Security: All applicants and registrants shall provide effective controls against theft and diversion of chemicals as described in 21 CFR 1309.71.

Imports/Exports. All import/exports and brokered transactions of regulated mixtures shall comply with the CSA (21 U.S.C. 957 and 971). Regulations for importation and exportation of List I chemicals are described in 21 CFR 1313. Separate registration is necessary for each activity (21 CFR 1309.22).

Administrative Inspection. Places, including factories, warehouses, or other establishments and conveyances, where regulated persons may lawfully hold, manufacture, or distribute, dispense, administer, or otherwise dispose of a regulated mixture or where records relating to those activities are maintained, are controlled premises as defined in 21 CFR 1316.02(c). The CSA (21 U.S.C. 880) allows for administrative inspections of these controlled premises as provided in 21 CFR 1316 Subpart A.

b. Specific Requirements That Will Apply to Regulated Chemical Mixtures Containing List II Chemicals Upon Publication of This Final Rule

A chemical mixture that is regulated because it contains a List II chemical will be treated as a List II chemical. Transactions that meet or exceed the cumulative monthly threshold for the listed chemical shall be regulated transactions. The regulatory requirements for regulated chemical mixtures containing List II chemicals are the same as for regulated chemical mixtures containing List I chemicals, except that registration requirements do not apply. Therefore, the same requirements for records and reports, imports/exports (except that pertaining to 21 U.S.C. 957), and administrative inspection, as outlined above, apply to handlers of List II regulated chemical mixtures.

Persons who submit an application for exemption (Section 1310.13) and whose application is pending or subsequently rejected by DEA must comply with all chemical control requirements, including recordkeeping and reporting, effective on January 14, 2005. Therefore, all transactions of the chemical mixture will be regulated, if at or above threshold, while an application for exemption is pending or awaiting correction. This is necessary because not regulating these transactions could result in increased diversion of chemicals desirable to drug traffickers.

c. Persons Affected by This Final Rule

This rulemaking will affect only persons who manufacture, distribute, import, or export chemical mixtures containing listed chemicals that DEA determined are useful to traffickers for the illicit production of controlled substances. DEA received comments on

only a few specific listed chemicals. Therefore, DEA concludes that the concentration limits proposed in the NPRM for the remaining majority of listed chemicals were acceptable to chemical handlers.

The goal of this rulemaking is to deny traffickers unregulated access to useful chemical mixtures while minimizing the burden on legitimate industry. This final rule seeks to target those chemical mixtures having the greatest potential for illicit use.

Comments to the NPRM informed DEA of ways to provide additional regulatory relief to the affected industry. DEA determined that some of these suggested changes would not compromise law enforcement objectives. Based on this new information, this final rule exempts the vast majority of potentially regulated chemical mixtures without compromising the needs of law enforcement. Certain chemical mixtures that are a concern to the paints and coatings industries, the food flavoring industries, fragrance manufacturers, the silicone industries, ink manufacturers, and others are being identified by regulation as exempt from CSA regulatory controls. Because DEA is able to adjust some of its proposed regulations based on information received in the comments, those persons who trade in chemical mixtures containing listed chemicals should be minimally impacted or not affected at all by this rulemaking.

Of those persons whose mixtures are regulated, only those who distribute above the threshold for the listed chemical(s) are regulated transactions (21 U.S.C. 802(39)(A)). A threshold is a quantity of chemical, as specified in 21 CFR 1310.04. Distributions at or above the specified threshold amount are regulated transactions. Thresholds are determined by totaling the amount of chemical in all distributions to the same person within a calendar month.

Persons who obtain a regulated chemical but do not distribute the chemical are end users. End users are not subject to CSA chemical regulatory control provisions such as registration or recordkeeping requirements. Some examples of end users are those who chemically react the listed chemical and change it into a non-listed chemical or formulate it into an exempt chemical mixture.

V. Exemption Authority

The CSA authorizes DEA, pursuant to 21 U.S.C. 802(39)(A)(iii), to remove certain transactions in listed chemicals from the definition of a regulated transaction that are unnecessary for enforcement of the CSA. Based on comments to the **Federal Register** proposed rule ''Exemption of Chemical Mixtures'' (63 FR 49506), DEA identified certain transactions in mixtures of acetone, ethyl ether, 2-butanone, and toluene that are unlikely sources for diversion. DEA was informed that tens of thousands of domestic transactions in these chemical mixtures occur annually. DEA has determined that the regulation of domestic and import transactions in mixtures containing the chemicals acetone, ethyl ether, 2-butanone, and toluene are unnecessary for enforcement of the CSA and should be removed from the definition of a regulated transaction.

Since the NPRM to this rulemaking did not discuss this exemption, the public did not have the opportunity to comment on the exclusion of these transactions from the definition of a regulated transaction. However, DEA has determined that good cause exists under the Administrative Procedure Act (5 U.S.C. 553 *et seq.*) (APA) to forgo a notice of proposed rulemaking on these exemptions. The APA states that an agency may forego a Notice of Proposed Rulemaking if it is impracticable, unnecessary, or contrary to the public interest.

If this rulemaking did not exempt these transactions upon publication, DEA would need to establish the exemption by notice and comment. If exemption of these transactions were delayed, affected parties would need to implement a system of recordkeeping and reporting for all these regulated transactions. This would involve several thousand transactions annually in chemical mixtures that otherwise may not be regulated if the exemptions became effective immediately.

If a proposed rule were published in the **Federal Register** to exclude these transactions from the definition of regulated transactions, each affected entity might find it necessary to establish compliance procedures although the requirement might prove to be only temporary. To avoid unnecessary burdens on affected companies during the pendency of proceedings in this matter, DEA has decided to include as part of this rulemaking an interim rule, with request for comment, that removes these transactions from the definition of a regulated transaction.

VI. Regulatory Certifications

Regulatory Flexibility Act

DEA, pursuant to 21 U.S.C. 802(39)(A)(v), is finalizing provisions to identify exempt chemical mixtures. The chemical mixtures being addressed are those that contain one or more of the 27 listed chemicals given in the Table of Concentration Limits. A Final Rule establishing provisions that exempt chemical mixtures containing ephedrine, N-methylephedrine, N-methylpseudoephedrine, norpseudoephedrine, phenylpropanolamine, and pseudoephedrine was published in a separate rulemaking (68 FR 23195, May 1, 2003).

Provisions to exempt chemical mixtures in the listed chemicals gamma-butyrolactone, red phosphorus, white phosphorus, and hypophosphorous acid (and its salts) are not being finalized at this time. These chemicals were not regulated when the NPRM ''Exemption of Chemical Mixtures'' (63 FR 49506) was published. Therefore, regulations addressing their mixtures were not proposed. DEA is treating mixtures containing these listed chemicals as exempt until promulgation of regulations that identify exempt chemical mixtures in these chemicals.

To identify exempt chemical mixtures, a concentration limit is placed on each chemical, or combination of chemicals, which determines the mixture's regulatory status. Categories of exempt chemical mixtures are also defined. In addition, DEA can determine that a mixture is exempt via an application process (Section 1310.13).

Comments to the NPRM informed DEA that a substantial number of chemical mixtures that are not useful to traffickers could potentially be regulated if the proposed rule were finalized as written. DEA determined that the regulation of these chemical mixtures is not necessary for enforcement of the CSA. Therefore, DEA decided to exempt these chemical mixtures from regulatory controls by identifying new concentration limits and exemption of certain types of transactions.

DEA notes that the List II solvent chemicals acetone, ethyl ether, 2-butanone, methyl isobutyl ketone, and toluene contribute to the largest number of potentially regulated chemical mixtures of List II chemicals. To limit the number of potentially regulated chemical mixtures to those necessary for enforcement of the CSA, DEA decided to define all domestic and import transactions of mixtures in these List II solvent chemicals as exempt transactions. This exemption applies to all persons that handle these chemical mixtures and not only to those who are represented in the comments. Although effective upon publication of this final rule, DEA is accepting post-

promulgation comments regarding this regulation.

The regulated industry only expressed concerns through comments to the NPRM with respect to three List I chemicals, anthranilic acid, benzaldehyde, and phenylacetic acid. The food flavoring and fragrance industries use these chemicals, as discussed by a single comment representing both the Flavor and Extract Manufacturers Association of the United States, and the Fragrance Materials Association of the United States. No other List I chemicals were addressed in the comments, therefore, DEA concludes that no other List I chemicals are a concern to handlers of chemical mixtures at the concentration limits proposed.

The concentration limits are being increased for the List I chemicals anthranilic acid and phenylacetic acid to the levels suggested by comment. Based on the comment, this increase is expected to exempt all chemical mixtures in anthranilic acid and phenylacetic acid identified by DEA that are not at substantial risk of diversion. However, DEA decided that traffickers could use chemical mixtures containing over 50 percent benzaldehyde, although a comment suggested that even higher concentrations would not be diverted. Therefore, DEA increased the concentration limit of benzaldehyde from 35 percent to 50 percent to regulate only those chemical mixtures identified by DEA as necessary for enforcement of the CSA. Therefore, some commercially available chemical mixtures in benzaldehyde are expected to be regulated.

Benzaldehyde is a chemical used in food flavorings. The comment states that the number of persons that manufacture or use flavors is 97. Provided the number of persons that will be newly registered to handle chemical mixtures in benzaldehyde is 97, the initial total registration cost would be $57,715, based on the current new application fee of $595.00 for each company. The total annual re-registration cost, based on the present renewal fee of $477.00 for each company, would be $46,269. In addition to the specific dollar cost, the registration requirement would require an annual reporting burden of approximately 48.5 hours. This is based on the estimated one-half hour required to complete and submit an application for registration or re-registration.

The comment stated that 66 members of the commenting industry association manufacture or sell fragrances. Assuming that all persons involved with the manufacture of food flavorings or fragrances (163) must register for each of the three chemicals, the combined current estimated cost for all new application fees is $290,955.

DEA adopted those suggestions that will not adversely impact enforcement of the CSA while eliminating the greatest number of transactions in List I and List II chemical mixtures identified by DEA. Only three List I chemicals and four List II chemicals contribute to the largest number of potential newly regulated chemical mixtures.

The remaining listed chemicals addressed in the rulemaking were not addressed in the comments and make up only a small number of new potentially regulated chemical mixtures. DEA does not anticipate a significant number of regulated chemical mixtures due to the remaining listed chemicals. For those chemical mixtures that fall within the regulatory parameters, the manufacturer can obtain exempt status for a chemical mixture by the application process. Once a chemical mixture has been granted exempt status by application, all down-stream activities in that unaltered mixture are exempt.

Therefore, in accordance with the Regulatory Flexibility Act (5 U.S.C. 605(b)), the Deputy Administrator has reviewed this regulation and by approving it certifies that this regulation will not have a significant economic impact upon a substantial number of small entities.

Executive Order 12866

This regulation has been drafted and reviewed in accordance with Executive Order 12866, Section 1(b), Principles of Regulation. DEA has determined that this rule is a ''significant regulatory action'' under Executive Order 12866, Section 3(f), Regulatory Planning and Review, and accordingly this rule has been reviewed by the Office of Management and Budget.

Executive Order 12988

This regulation meets the applicable standards set forth in Sections 3(a) and 3(b)(2) of Executive Order 12988.

Executive Order 13132

This rulemaking does not preempt or modify any provision of state law; nor does it impose enforcement responsibilities on any state; nor does it diminish the power of any state to enforce its own laws. Accordingly, this rulemaking does not have federalism implications warranting the application of Executive Order 13132.

Unfunded Mandates Reform Act of 1995

This rule will not result in the expenditure by state, local, and tribal governments, in the aggregate, or by the private sector, of $114 million or more in any one year, and will not significantly or uniquely affect small governments. Therefore, no actions were deemed necessary under the provisions of the Unfunded Mandates Reform Act of 1995.

Small Business Regulatory Enforcement Fairness Act of 1996

This rule is not a major rule as defined by Section 804 of the Small Business Regulatory Enforcement Fairness Act of 1996. This rule will not result in an annual effect on the economy of $100,000,000 or more; a major increase in costs or prices; or significant adverse effects on competition, employment, investment, productivity, innovation, or on the ability of United States-based companies to compete with foreign-based companies in domestic and export markets.

Paperwork Reduction Act

This Final Rule requires that persons handling nonexempt chemical mixtures containing a List I chemical must register with DEA to handle the regulated mixture. Persons will register using DEA Form 510 ''Application for Registration under Domestic Chemical Diversion Control Act of 1993'' addressed in OMB information collection 1117–0031. As it is not possible for DEA to determine the number of persons whose chemical mixtures might be exempted from regulation by one of the three criteria established for exempting such mixtures, it is not possible for DEA to quantify at this time the number of persons affected by the requirement of registration. As information regarding the number of persons registering with DEA due to this rule becomes available, DEA will adjust its collection of information accordingly.

List of Subjects in 21 CFR Part 1310

Drug traffic control, List I and List II chemicals, Reporting and recordkeeping requirements.

■ For the reasons set out above, 21 CFR part 1310 is amended to read as follows:

PART 1310—[AMENDED]

■ 1. The authority citation for part 1310 continues to read as follows:

Authority: 21 U.S.C. 802, 830, 871(b), 890.

■ 2. Section 1310.04 is amended by revising paragraph (h) and adding new paragraphs (i) and (j) to read as follows:

§ 1310.04 Maintenance of records.

* * * * *

(h) The thresholds and conditions in paragraphs (f) and (g) of this section will apply to transactions involving regulated chemical mixtures. For purposes of determining whether the weight or volume of a chemical mixture meets or exceeds the applicable quantitative threshold, the following rules apply:

(1) For chemical mixtures containing List I chemicals or List II chemicals other than those in paragraph (h)(2) of this section, the threshold is determined by the weight of the listed chemical in the chemical mixture.

(2) For the List II chemicals acetone, ethyl ether, 2-butanone, toluene, and methyl isobutyl ketone, the threshold is determined by the weight of the entire chemical mixture.

(3) If two or more listed chemicals are present in a chemical mixture, and the quantity of any of these chemicals equals or exceeds the threshold applicable to that chemical, then the transaction is regulated.

■ 3. Section 1310.08 is amended by adding a new paragraph (l) to read as follows:

§ 1310.08 Excluded transactions.

* * * * *

(l) Domestic and import transactions in chemical mixtures that contain acetone, ethyl ether, 2-butanone, or toluene unless regulated because of being formulated with another listed chemical above the concentration limit.

■ 4. Section 1310.09 is amended by adding new paragraphs (f) and (g) to read as follows:

§ 1310.09 Temporary exemption from registration.

* * * * *

(f) Except for chemical mixtures containing the listed chemicals in paragraph (e) of this section, each person required by section 302 of the Act (21 U.S.C. 822) to obtain a registration to distribute, import, or export regulated chemical mixtures, pursuant to §§ 1310.12 and 1310.13, is temporarily exempted from the registration requirement, provided that DEA receives a proper application for registration or application for exemption on or before February 14, 2005. The exemption will remain in effect for each person who has made such application until the Administration has approved or denied that application. This exemption applies only to registration; all other chemical control requirements set forth in parts 1309, 1310, and 1313 of this chapter remain in full force and effect.

(g) Any person who distributes, imports, or exports a chemical mixture whose application for exemption is subsequently denied by DEA must obtain a registration with DEA. A temporary exemption from the registration requirement will also be provided for these persons, provided that DEA receives a properly completed application for registration on or before 30 days following the date of official DEA notification that the application for exemption has not been approved. The temporary exemption for such persons will remain in effect until DEA takes final action on their registration application.

■ 5. Section 1310.12 is amended by revising paragraph (c) and adding new paragraphs (d)(2) and (3) to read as follows:

§ 1310.12 Exempt chemical mixtures.

* * * * *

(c) Mixtures containing a listed chemical in concentrations equal to or less than those specified in the ''Table of Concentration Limits'' are designated as exempt chemical mixtures for the purpose set forth in this section. The concentration is determined for liquid-liquid mixtures by using the volume or weight and for mixtures containing solids or gases by using the unit of weight.

TABLE OF CONCENTRATION LIMITS

	DEA chemical code number	Concentration	Special conditions
List I Chemicals			
N-Acetylanthranilic acid, its salts and esters	8522	20% by Weight	Concentration based on any combination of N-acetylanthranilic acid and its salts and esters.
Anthranilic acid, and its salts and esters	8530	50% by Weight	Concentration is based on any combination of anthranilic acid and its salts and esters.
Benzaldehyde	8256	50% by Weight or Volume.	
Benzyl cyanide	8570	20% by Weight or Volume.	
Ephedrine, its salts, optical isomers, and salts of optical isomers.	8113	5% by Weight, net weight includes capsule, if any.	Concentration based on any combination of ephedrine, pseudoephedrine, and their salts, optical isomers and salts of optical isomers.
Ergonovine and its salts	8675	Not exempt at any concentration.	Chemical mixtures containing any amount of ergonovine, including its salts, are not exempt.
Ergotamine and its salts	8676	Not exempt at any concentration.	Chemical mixtures containing amount of any ergotamine, including its salts, are not exempt.
Ethylamine and its salts	8678	20% by Weight or Volume.	Ethylamine or its salts in an inert carrier solvent is not considered a mixture. Concentration is based on ethylamine in the mixture and not the combination of ethylamine and carrier solvent, if any.
Hydriodic acid	6695	20% by Weight or Volume.	
Isosafrole	8704	20% by Weight or Volume.	Concentration in a mixture cannot exceed 20% if taken alone or in any combination with safrole.
Methylamine and its salts	8520	20% by Weight	Methylamine or its salts in an inert carrier solvent is not considered a mixture. Weight is based on methylamine in the mixture and not the combined weight of carrier solvent, if any.
3,4-Methylenedioxyphenyl-2-propanone	8502	20% by Weight.	

TABLE OF CONCENTRATION LIMITS—Continued

	DEA chemical code number	Concentration	Special conditions
N-Methylephedrine, its salts, optical isomers, and salts of optical isomers.	8115	0.1% by Weight	Concentration based on any combination of salts N-methylephedrine, N-methylpseudoephedrine and their salts, optical isomers and salts of optical isomers.
N-Methylpseudoephedrine, its salts, optical isomers, and salts of optical isomers.	8119	0.1% by Weight	Concentration based on any combination of N-methylpseudoephedrine, N-methylephedrine, and their salts, optical isomers and salts of optical isomers.
Nitroethane	6724	20% by Weight or Volume.	
Norpseudoephedrine, its salts, optical isomers, and salts of optical isomers.	8317	0.6% by Weight	Concentration based on any combination of norpseudoephedrine, phenylpropanolamine and their salts, optical isomers and salts of optical isomers.
Phenylacetic acid, and its salts and esters	8791	40% by Weight	Concentration is based on any combination of phenylacetic acid and its salts and esters.
.			
Phenylpropanolamine, its salts, optical isomers, and salts of optical isomers.	1225	0.6% by Weight	Concentration based on any combination of phenylpropanolamine, norpseudoephedrine and their salts, optical isomers and salts of optical isomers.
Piperidine, and its salts	2704	20% by Weight or Volume.	Concentration based on any combination of piperidine and its salts. Concentration based on weight if a solid, weight or volume if a liquid.
Piperonal	8750	20% by Weight or Volume.	
Propionic anhydride	8328	20% by Weight or Volume.	
Pseudoephedrine, its salts, optical isomers, and salts of optical isomers.	8112	5% by Weight, net weight includes capsule, if any.	Concentration based on any combination of pseudoephedrine, ephedrine, and their salts, optical isomers and salts of optical isomers.
Safrole	8323	20% by Volume	Concentration in a mixture cannot exceed 20% if taken alone or in any combination with isosafrole.
List II Chemicals			
Acetic Anhydride	8519	20% by Weight or Volume.	
Acetone	6532	35% by Weight or Volume.	Exports only; Limit applies to acetone or any combination of acetone, ethyl ether, 2-butanone, methyl isobutyl ketone, and toluene if present in the mixture by summing the concentrations for each chemical.
Benzyl chloride	8568	20% by Weight or Volume.	
2-butanone	6714	35% by Weight or Volume.	Exports only; Limit applies to 2-butanone or any combination of acetone, ethyl ether, 2-butanone, methyl isobutyl ketone, and toluene if present in the mixture by summing the concentrations for each chemical.
Ethyl ether	6584	35% by Weight or Volume.	Exports only; Limit applies to ethyl ether or any combination of acetone, ethyl ether, 2-butanone, methyl isobutyl ketone, and toluene if present in the mixture by summing the concentrations for each chemical.
Hydrochloric acid	6545	20% by Weight or Volume.	Hydrogen chloride in an inert carrier solvent, such as aqueous or alcoholic solutions, is not considered a mixture. Weight is based on hydrogen chloride in the mixture and not the combined weight of the carrier solvent, if any.
Methyl isobutyl ketone	6715	35% by Weight or Volume.	Exports only pursuant to § 1310.08; Limit applies to methyl isobutyl ketone or any combination of acetone, ethyl ether, 2-butanone, methyl isobutyl ketone, and toluene if present in the mixture by summing the concentrations for each chemical.
Potassium permanganate	6579	15% by Weight.	

TABLE OF CONCENTRATION LIMITS—Continued

	DEA chemical code number	Concentration	Special conditions
Sulfuric acid	6552	20% by Weight or Volume.	Sulfuric acid in an inert carrier solvent, such as aqueous or alcoholic solutions, is not considered a mixture. Weight is based on sulfuric acid in the mixture and not the combined weight of the carrier solvent, if any.
Toluene	594	35% by Weight or Volume.	Exports only; Limit applies to toluene or any combination of acetone, ethyl ether, 2-butanone, methyl isobutyl ketone, and toluene if present in the mixture by summing the concentrations for each chemical.

(d) The following categories of chemical mixtures are automatically exempt from the provisions of the Controlled Substances Act as described in paragraph (a) of this section:

(1) * * *

(2) Chemical mixtures that are distributed directly to an incinerator for destruction or directly to an authorized waste recycler or reprocessor where such distributions are documented on United States Environmental Protection Agency Form 8700–22; persons distributing the mixture to the incinerator or recycler must maintain and make available to agents of the Administration, upon request, such documentation for a period of no less than two years.

(3) Completely formulated paints and coatings: Completely formulated paints and coatings are only those formulations that contain all the components of the paint or coating for use in the final application without the need to add any additional substances except a thinner if needed in certain cases. A completely formulated paint or coating is defined as any clear or pigmented liquid, liquefiable or mastic composition designed for application to a substrate in a thin layer that is converted to a clear or opaque solid protective, decorative, or functional adherent film after application. Included in this category are clear coats, topcoats, primers, varnishes, sealers, adhesives, lacquers, stains, shellacs, inks, and temporary protective coatings.

* * * * *

Dated: December 9, 2004.

Michele M. Leonhart,

Deputy Administrator.

[FR Doc. 04–27449 Filed 12–14–04; 8:45 am]

BILLING CODE 4410–09–P

PENSION BENEFIT GUARANTY CORPORATION

29 CFR Parts 4022 and 4044

Benefits Payable in Terminated Single-Employer Plans; Allocation of Assets in Single-Employer Plans; Interest Assumptions for Valuing and Paying Benefits

AGENCY: Pension Benefit Guaranty Corporation.

ACTION: Final rule.

SUMMARY: The Pension Benefit Guaranty Corporation's regulations on Benefits Payable in Terminated Single-Employer Plans and Allocation of Assets in Single-Employer Plans prescribe interest assumptions for valuing and paying benefits under terminating single-employer plans. This final rule amends the regulations to adopt interest assumptions for plans with valuation dates in January 2005. Interest assumptions are also published on the PBGC's Web site (*http://www.pbgc.gov*).

EFFECTIVE DATE: January 1, 2005.

FOR FURTHER INFORMATION CONTACT: Harold J. Ashner, Assistant General Counsel, Office of the General Counsel, Pension Benefit Guaranty Corporation, 1200 K Street, NW., Washington, DC 20005, 202–326–4024. (TTY/TDD users may call the Federal relay service toll-free at 1–800–877–8339 and ask to be connected to 202–326–4024.)

SUPPLEMENTARY INFORMATION: The PBGC's regulations prescribe actuarial assumptions—including interest assumptions—for valuing and paying plan benefits of terminating single-employer plans covered by title IV of the Employee Retirement Income Security Act of 1974. The interest assumptions are intended to reflect current conditions in the financial and annuity markets.

Three sets of interest assumptions are prescribed: (1) A set for the valuation of benefits for allocation purposes under section 4044 (found in Appendix B to part 4044), (2) a set for the PBGC to use to determine whether a benefit is payable as a lump sum and to determine lump-sum amounts to be paid by the PBGC (found in Appendix B to part 4022), and (3) a set for private-sector pension practitioners to refer to if they wish to use lump-sum interest rates determined using the PBGC's historical methodology (found in Appendix C to part 4022).

Accordingly, this amendment (1) adds to Appendix B to part 4044 the interest assumptions for valuing benefits for allocation purposes in plans with valuation dates during January 2005, (2) adds to Appendix B to part 4022 the interest assumptions for the PBGC to use for its own lump-sum payments in plans with valuation dates during January 2005, and (3) adds to Appendix C to part 4022 the interest assumptions for private-sector pension practitioners to refer to if they wish to use lump-sum interest rates determined using the PBGC's historical methodology for valuation dates during January 2005.

For valuation of benefits for allocation purposes, the interest assumptions that the PBGC will use (set forth in Appendix B to part 4044) will be 4.10 percent for the first 20 years following the valuation date and 4.75 percent thereafter. These interest assumptions (in comparison to those in effect for December 2004) represent an increase of 0.30 percent for the first 20 years following the valuation date and a decrease of 0.25 percent for all years thereafter.

The interest assumptions that the PBGC will use for its own lump-sum payments (set forth in Appendix B to part 4022) will be 3.00 percent for the period during which a benefit is in pay status and 4.00 percent during any years preceding the benefit's placement in pay status. These interest assumptions represent an increase (from those in effect for December 2004) of 0.25 percent for the period during which a

benefit is in pay status and are otherwise unchanged.

For private-sector payments, the interest assumptions (set forth in Appendix C to part 4022) will be the same as those used by the PBGC for determining and paying lump sums (set forth in Appendix B to part 4022).

The PBGC has determined that notice and public comment on this amendment are impracticable and contrary to the public interest. This finding is based on the need to determine and issue new interest assumptions promptly so that the assumptions can reflect, as accurately as possible, current market conditions.

Because of the need to provide immediate guidance for the valuation and payment of benefits in plans with valuation dates during January 2005, the PBGC finds that good cause exists for making the assumptions set forth in this amendment effective less than 30 days after publication.

The PBGC has determined that this action is not a ''significant regulatory action'' under the criteria set forth in Executive Order 12866.

Because no general notice of proposed rulemaking is required for this amendment, the Regulatory Flexibility Act of 1980 does not apply. *See* 5 U.S.C. 601(2).

List of Subjects

29 CFR Part 4022

Employee benefit plans, Pension insurance, Pensions, Reporting and recordkeeping requirements.

29 CFR Part 4044

Employee benefit plans, Pension insurance, Pensions.

■ In consideration of the foregoing, 29 CFR parts 4022 and 4044 are amended as follows:

PART 4022—BENEFITS PAYABLE IN TERMINATED SINGLE-EMPLOYER PLANS

■ 1. The authority citation for part 4022 continues to read as follows:

Authority: 29 U.S.C. 1302, 1322, 1322b, 1341(c)(3)(D), and 1344.

■ 2. In appendix B to part 4022, Rate Set 135, as set forth below, is added to the table. (The introductory text of the table is omitted.)

Appendix B to Part 4022—Lump Sum Interest Rates For PBGC Payments

* * * * *

Rate set	For plans with a valuation date		Immediate annuity rate (percent)	Deferred annuities (percent)				
	On or after	Before		i_1	i_2	i_3	n_1	n_2
*	*		*	*	*	*	*	
135	1–1–05	2–1–05	3.00	4.00	4.00	4.00	7	8

■ 3. In appendix C to part 4022, Rate Set 135, as set forth below, is added to the table. (The introductory text of the table is omitted.)

Appendix C to Part 4022—Lump Sum Interest Rates For Private-Sector Payments

* * * * *

Rate set	For plans with a valuation date		Immediate annuity rate (percent)	Deferred annuities (percent)				
	On or after	Before		i_1	i_2	i_3	n_1	n_2
*	*		*	*	*	*	*	
135	1–1–05	2–1–05	3.00	4.00	4.00	4.00	7	8

PART 4044—ALLOCATION OF ASSETS IN SINGLE-EMPLOYER PLANS

■ 4. The authority citation for part 4044 continues to read as follows:

Authority: 29 U.S.C. 1301(a), 1302(b)(3), 1341, 1344, 1362.

■ 5. In appendix B to part 4044, a new entry, as set forth below, is added to the table. (The introductory text of the table is omitted.)

Appendix B to Part 4044—Interest Rates Used To Value Benefits

* * * * *

For valuation dates occurring in the month—	The values of i_t are:					
	i_t	for t =	i_t	for t =	i_t	for t =
*	*	*	*	*	*	*
January 2005	.0410	1–20	.0475	>20	N/A	N/A

Issued in Washington, DC, on this 9th day of December 2004.

Joseph H. Grant,

Deputy Executive Director and Chief Operating Officer, Pension Benefit Guaranty Corporation.

[FR Doc. 04–27443 Filed 12–14–04; 8:45 am]

BILLING CODE 7708–01–P

DEPARTMENT OF HOMELAND SECURITY

Coast Guard

33 CFR Part 117

[CGD08–04–033]

RIN 1625–AA09

Drawbridge Operation Regulation; Mississippi River, Iowa, and Illinois

AGENCY: Coast Guard, DHS.

ACTION: Final rule.

SUMMARY: The Coast Guard is changing the regulation governing the Rock Island Railroad & Highway Drawbridge, across the Upper Mississippi River at Mile 482.9, at Rock Island, Illinois. The drawbridge need not open for river traffic and may remain in the closed-to-navigation position from 7 a.m., December 15, 2004, until 8 a.m., March 15, 2005. This rule allows time for making upgrades to critical mechanical components and perform scheduled annual maintenance/repairs.

DATES: This rule is effective 7 a.m., December 15, 2004, until 8 a.m., March 15, 2005.

ADDRESSES: Comments and material received from the public, as well as documents indicated in this preamble as being available in the docket, are part of the docket [CGD08–04–033] and are available for inspection or copying at room 2.107f in the Robert A. Young Federal Building at Eighth Coast Guard District, between 8 a.m. and 4 p.m., Monday through Friday, except Federal holidays. Commander (obr), Eighth Coast Guard District, maintains the public docket for this rulemaking.

FOR FURTHER INFORMATION CONTACT: Mr. Roger K. Wiebusch, Bridge Administrator, (314) 539–3900, extension 2378.

SUPPLEMENTARY INFORMATION:

Regulatory History

On October 21, 2004, we published a notice of proposed rulemaking (NPRM) entitled Drawbridge Operation Regulation; Mississippi River, Iowa and Illinois in the **Federal Register** (69 FR 61770). We received no comment letters on the proposed rule. No public meeting was requested, and none was held.

Good Cause for Making Rule Effective in Less Than 30 Days

Under 5 U.S.C. 553(d)(3), the Coast Guard finds that good cause exists for making this rule effective in less than 30 days after publication in the **Federal Register**. This drawbridge requires critical repairs and annual maintenance that necessitate it to remain in the closed-to-navigation position for 89 consecutive days. Navigation on the waterway consists primarily of commercial tows and recreational watercraft that will not be significantly impacted due to the reduced navigation in winter months. Thus, it is in the public's interest to complete these repairs during the winter months. To keep the closure within the primary winter months this rule must go into effect by December 15, 2004. Additionally, the closure dates were included in the NPRM, and no comments were received objecting to the dates.

Background and Purpose

On August 12, 2004, the Department of Army, Rock Island Arsenal, requested a temporary change to the operation of the Rock Island Railroad & Highway Drawbridge across the Upper Mississippi River, Mile 482.9, at Rock Island, Illinois to allow the drawbridge to remain in the closed-to-navigation position for 89 consecutive days for critical repairs and annual maintenance. Navigation on the waterway consists primarily of commercial tows and recreational watercraft and will not be significantly impacted due to the reduced navigation in winter months. Presently, the draw opens on signal for passage of river traffic. The Rock Island Arsenal requested the drawbridge be permitted to remain closed-to-navigation from 7 a.m., December 15, 2004, until 8 a.m., March 15, 2005.

Discussion of Comments and Changes

The Coast Guard received no comment letters. No changes will be made to this final rule.

Regulatory Evaluation

This rule is not a ''significant regulatory action'' under section 3(f) of Executive Order 12866, Regulatory Planning and Review, and does not require an assessment of potential costs and benefits under section 6(a)(3) of that Order. The Office of Management and Budget has not reviewed it under that Order. It is not ''significant'' under the regulatory policies and procedures of the Department of Homeland Security (DHS).

The Coast Guard expects that this temporary change to operation of the Rock Island Railroad & Highway Drawbridge will have minimal economic impact on commercial traffic operating on the Upper Mississippi River. This temporary change has been written in such a manner as to allow for minimal interruption of the drawbridge's regular operation.

Small Entities

Under the Regulatory Flexibility Act (5 U.S.C. 601–612), we have considered whether this rule would have a significant economic impact on a substantial number of small entities. The term ''small entities'' comprises small businesses, not-for-profit organizations that are independently owned and operated and are not dominant in their fields, and governmental jurisdictions with populations of less than 50,000.

This proposed rule will have a negligible impact on vessel traffic. The primary users of the Upper Mississippi River in Rock Island, Illinois are commercial towboat operators. With the onset of winter conditions most activity on the Upper Mississippi River is curtailed and there are few, if any, significant navigation demands for opening the draw span.

The Coast Guard certifies under 5 U.S.C. 605(b) that this rule would not have a significant economic impact on a substantial number of small entities.

Assistance for Small Entities

Under section 213(a) of the Small Business Regulatory Enforcement Fairness Act of 1996 (Public Law 104–121), we offered to assist small entities in understanding the rule so that they could better evaluate its effects on them and participate in the rulemaking process. Small businesses may send comments on the actions of Federal employees who enforce or otherwise determine compliance with, Federal regulations to the Small Business and Agriculture Regulatory Enforcement Ombudsman and the Regional Small Business Regulatory Fairness Boards. The Ombudsman evaluates these actions annually and rates each agency's responsiveness to small business. If you wish to comment on actions by employees of the Coast Guard, call 1–800–REG–FAIR (1–800–734–3247).

Collection of Information

This rule calls for no new collection of information under the Paperwork Reduction Act of 1995 (44 U.S.C. 3501–3520).

Federalism

A rule has implications for federalism under Executive Order 13132, Federalism, if it has a substantial direct effect on State or local governments and would either preempt State law or impose a substantial direct cost of compliance on them. We have analyzed this rule under that Order and have determined that it does not have implications for federalism.

Unfunded Mandates Reform Act

The Unfunded Mandates Reform Act of 1995 (2 U.S.C. 1531–1538) requires Federal agencies to assess the effects of their discretionary regulatory actions. In particular, the Act addresses actions that may result in the expenditure by a State, local, or tribal government, in the aggregate, or by the private sector of $100,000,000 or more in any one year. Though this rule will not result in such expenditure, we do discuss the effects of this rule elsewhere in this preamble.

Taking of Private Property

This rule will not affect a taking of private property or otherwise have taking implications under Executive Order 12630, Governmental Actions and Interference with Constitutionally Protected Property Rights.

Civil Justice Reform

This rule meets applicable standards in sections 3(a) and 3(b)(2) of Executive Order 12988, Civil Justice Reform, to minimize litigation, eliminate ambiguity, and reduce burden.

Protection of Children

We have analyzed this rule under Executive Order 13045, Protection of Children from Environmental Health Risks and Safety Risks. This rule is not an economically significant rule and does not create an environmental risk to health or risk to safety that may disproportionately affect children.

Indian Tribal Governments

This rule does not have tribal implications under Executive Order 13175, Consultation and Coordination with Indian Tribal Governments, because it does not have a substantial direct effect on one or more Indian tribes, on the relationship between the Federal Government and Indian tribes, or on the distribution of power and responsibilities between the Federal Government and Indian tribes.

Energy Effects

We have analyzed this rule under Executive Order 13211, Actions Concerning Regulations That Significantly Affect Energy Supply, Distribution, or Use. We have determined that it is not a ''significant regulatory action'' under that order because it is not a ''significant regulatory action'' under Executive Order 12866 and is not likely to have a significant adverse effect on the supply, distribution, or use of energy. The Administrator of the Office of Information and Regulatory Affairs has not designated it as a significant energy action. Therefore, it does not require a Statement of Energy Effects under Executive Order 13211.

Technical Standards

The National Technology Transfer and Advancement Act (NTTAA) (15 U.S.C. 272 note) directs agencies to use voluntary consensus standards in their regulatory activities unless the agency provides Congress, through the Office of Management and Budget, with an explanation of why using these standards would be inconsistent with applicable law or otherwise impractical. Voluntary consensus standards are technical standards (*e.g.*, specifications of materials, performance, design, or operation; test methods; sampling procedures; and related management systems practices) that are developed or adopted by voluntary consensus standards bodies.

This rule does not use technical standards. Therefore, we did not consider the use of voluntary consensus standards.

Environment

We have analyzed this rule under Commandant Instruction M16475.1D, which guides the Coast Guard in complying with National Environmental Policy Act of 1969 (NEPA) (42 U.S.C. 4321–4370f), and have concluded that there are no factors in this case that would limit the use of a categorical exclusion under section 2.B.2 of the instruction. Therefore, this rule is categorically excluded, under figure 2–1, paragraph (32)(e) of the Instruction, from further environmental documentation.

Paragraph (32)(e) excludes the promulgation of operating regulations or procedures for drawbridges from the environmental documentation requirements of the National Environmental Policy Act (NEPA). Since this regulation would alter the normal operating conditions of the drawbridge, it falls within this exclusion. A ''Categorical Exclusion Determination'' is available in the docket for inspection or copying where indicated under **ADDRESSES**.

List of Subjects in 33 CFR Part 117 Bridges

Regulations.

■ For the reasons discussed in the preamble, the Coast Guard amends 33 CFR part 117 as follows:

PART 117—DRAWBRIDGE OPERATION REGULATIONS

■ 1. The authority citation for part 117 continues to read as follows:

Authority: 33 U.S.C. 499; Department of Homeland Security Delegation No. 0170.1; 33 CFR 1.05–1(g); section 117.255 also issued under the authority of Pub. L. 102–587, 106 Stat. 5039.

■ 2. From 7 a.m., December 15, 2004, until 8 a.m., March 15, 2005, temporarily add new § 117.T394, to read as follows:

§ 117.T394 Upper Mississippi River.

The Rock Island Railroad and Highway Drawbridge, mile 482.9, at Rock Island, Illinois, need not open for river traffic and may be maintained in the closed-to-navigation position.

Dated: December 3, 2004.

R.F. Duncan,

Rear Admiral, U.S. Coast Guard, Commander, Eighth Coast Guard District.

[FR Doc. 04–27471 Filed 12–14–04; 8:45 am]

BILLING CODE 4910–15–P

NATIONAL ARCHIVES AND RECORDS ADMINISTRATION

36 CFR Part 1228

RIN 3095–AB41

Records Management; Unscheduled Records

AGENCY: National Archives and Records Administration (NARA).

ACTION: Final rule.

SUMMARY: NARA is revising our regulations to allow unscheduled records to be transferred to records storage facilities. These changes will allow agencies to transfer unscheduled records in a timely manner.

DATES: This rule is effective January 14, 2005.

FOR FURTHER INFORMATION CONTACT: Cheryl Stadel-Bevans at telephone number (301) 837–3021 or fax number (301) 837–0319.

SUPPLEMENTARY INFORMATION: NARA published a proposed rule on September 17, 2004, at 69 FR 56015, for a 60-day public comment period. We received two comments, both from Federal agencies. One comment expressed no concerns about the proposed rule. The second comment supported the changes

outlined in the proposed rule. Therefore, we are making no changes in this final rule.

This final rule is not a significant regulatory action for the purposes of Executive Order 12866 and has been reviewed by the Office of Management and Budget (OMB). As required by the Regulatory Flexibility Act, it is hereby certified that this final rule will not have a significant impact on a substantial number of small entities because this rule applies to Federal agencies. This final rule does not have any federalism implications.

List of Subjects in 36 CFR Part 1228

Archives and records.

■ For the reasons set forth in the preamble, NARA amends chapter XII of title 36 of the Code of Federal Regulations as follows:

PART 1228—DISPOSITION OF FEDERAL RECORDS

■ 1. The authority for Part 1228 continues to read as follows:

Authority: 44 U.S.C. chs. 21, 29, and 33.

■ 2. Amend § 1228.152 by revising the entry in the table for item (2)(ii) to read as follows:

§ 1228.152 Under what conditions may Federal records be stored in records storage facilities?

* * * * *

Type of record	Conditions
* * * * *	
(2) * * *	(i) * * * (ii) Also requires prior notification to NARA (see § 1228.154(b)).

* * * * *

■ 3. Amend § 1228.154 by revising paragraphs (b) and (c)(1)(vii) to read as follows:

§ 1228.154 What requirements must an agency meet when it transfers records to a records storage facility?

* * * * *

(b) To transfer unscheduled records, notify NARA (NWML) in writing prior to the transfer. The notification must identify the records storage facility and include a copy of the information required by paragraph (c) of this section.

* * * * *

(c) * * *

(1) * * *

(vii) Citation to NARA-approved schedule or agency records disposition manual (unscheduled records must cite the date the agency notified NARA or, if available, the date the SF 115 was submitted to NARA);

* * * * *

Dated: December 9, 2004.

John W. Carlin,

Archivist of the United States.

[FR Doc. 04–27420 Filed 12–14–04; 8:45 am]

BILLING CODE 7515–01–P

DEPARTMENT OF VETERANS AFFAIRS

38 CFR Part 21

RIN 2900–AM08

Increase in Rates Payable Under the Montgomery GI Bill—Active Duty

AGENCY: Department of Veterans Affairs.

ACTION: Final rule.

SUMMARY: By statute, the monthly rates of basic educational assistance payable under the Montgomery GI Bill—Active Duty program must be adjusted each fiscal year. In accordance with the statutory formula, the regulations governing rates of basic educational assistance payable under the Montgomery GI Bill—Active Duty program for Fiscal Year 2005 (October 1, 2004, through September 30, 2005) are changed to show a 2% increase in these rates.

DATES: *Effective Date:* This final rule is effective December 15, 2004.

Applicability Date: The changes in rates are applied retroactively to October 1, 2004 to conform to statutory requirements.

FOR FURTHER INFORMATION CONTACT: Lynn M. Nelson, Education Adviser, Education Service (225C), Veterans Benefits Administration, Department of Veterans Affairs, 810 Vermont Avenue, NW., Washington, DC 20420, telephone (202) 273–7294.

SUPPLEMENTARY INFORMATION: Under the formula mandated by 38 U.S.C. 3015(h), the Secretary must increase the full-time rates of basic educational assistance payable under the Montgomery GI Bill—Active Duty (MGIB) program each fiscal year. For Fiscal Year (FY) 2005 the increase is 2%, which is the percentage by which the total of the monthly Consumer Price Index-W for July 1, 2003, through June 30, 2004, exceeds the total of the monthly Consumer Price Index-W for July 1, 2002, through June 30, 2003. The Veterans Benefits Act of 2003 amended 38 U.S.C. 3015(h) to provide that during FY 2005 through FY 2013, the Secretary must round down the increased rate to the next lower whole dollar. The full-time basic educational assistance rates in this document at 38 CFR 21.7136(b)(1), (c)(1), and 38 CFR 21.7137(a)(1) are rounded down to the nearest dollar.

It should be noted that 2% increase does not affect all educational assistance payable under the MGIB. The 2% increase applies only to the basic educational assistance rate. The increase does not apply to additional amounts payable by the Secretary of Defense to individuals with skills or a specialty in which there is a critical shortage of personnel (so-called ''kickers''). Veterans who previously had eligibility under the Veterans' Educational Assistance program (Vietnam Era GI Bill) receive monthly payments that are in part based upon basic educational assistance and in part based upon the rates payable under the Vietnam Era GI Bill. Only that portion attributable to basic educational assistance is increased. In addition, the increase does not apply to additional amounts payable for dependents.

38 U.S.C. 3015(a) and (b) require that the Department of Veterans Affairs (VA) pay part-time students at appropriately reduced rates. Since the first student became eligible for assistance under the MGIB in 1985, VA has paid three-quarter-time students and one-half-time students at 75% and 50% of the full-time institutional rate, respectively. Students pursuing a program of education at less than one-half but more than one-quarter time have had their payments limited to 50% or less of the full-time institutional rate. Similarly, students pursuing a program of education at one-quarter time or less have had their payments limited to 25% or less of the full-time institutional rate. Changes are made consistent with the authority and formula described in this paragraph.

In addition, since 38 U.S.C. 3032(c) requires that monthly rates payable to veterans in apprenticeship or other on-the-job training must be set at a given percentage of the full-time rate, the apprenticeship or on-the-job training rates have been accordingly increased effective October 1, 2004.

The changes set forth in this final rule are effective from the date of publication, but the changes in the rates are applied in accordance with the applicable statutory provisions discussed above. Thus, the Department of Veterans Affairs began paying the increased rates for training pursued after September 30, 2004.

Administrative Procedure Act

Changes made by this final rule merely reflect statutory requirements and adjustments made based on

previously established formulas. Accordingly, there is a basis for dispensing with prior notice and comment and delayed effective date provisions of 5 U.S.C. 552 and 553.

Paperwork Reduction Act

This document contains no provisions constituting a collection of information under the Paperwork Reduction Act (44 U.S.C. 3501–3521).

Regulatory Flexibility Act

The initial and final regulatory flexibility analyses requirements of sections 603 and 604 of the Regulatory Flexibility Act, 5 U.S.C. 601–612, are not applicable to this rule, because a notice of proposed rulemaking is not required for this rule. Even so the Secretary of Veterans Affairs hereby certifies that this final rule will not have a significant economic impact on a substantial number of small entities as they are defined in the Regulatory Flexibility Act. This final rule directly affects only individuals and does not directly affect small entities. Therefore, this final rule is also exempt pursuant to 5 U.S.C. 605(b) from the initial and final regulatory flexibility analyses requirements of sections 603 and 604.

Unfunded Mandates

The Unfunded Mandates Reform Act of 1995 requires, at 2 U.S.C. 1532, that agencies prepare an assessment of anticipated costs and benefits before developing any rule that may result in expenditure by State, local, or tribal governments, in the aggregate, or by the private sector of $100 million or more (adjusted annually for inflation) in any given year. This rule would have no such effect on State, local, or tribal governments, or the private sector.

Catalog of Federal Domestic Assistance Program Numbers

The Catalog of Federal Domestic Assistance numbers for the program affected by this final rule is 64.124.

List of Subjects in 38 CFR Part 21

Administrative practice and procedure, Armed Forces, Civil rights, Claims, Colleges and universities, Conflict of interests, Defense Department, Education, Employment, Grant programs-education, Grant programs-veterans, Health programs, Loan programs-education, Loan programs-veterans, Manpower training programs, Reporting and recordkeeping requirements, Schools, Travel and transportation expenses, Veterans, Vocational education, Vocational Rehabilitation.

Approved: December 7, 2004.

Anthony J. Principi,

Secretary of Veterans Affairs.

■ For the reasons set out above, 38 CFR part 21 (subpart K) is amended as follows:

PART 21—VOCATIONAL REHABILITATION AND EDUCATION

Subpart K—All Volunteer Force Educational Assistance Program (Montgomery GI Bill—Active Duty)

■ 1. The authority citation for part 21, subpart K, continues to read as follows:

Authority: 38 U.S.C. 501(a), chs. 30, 36, unless otherwise noted.

■ 2. Section 21.7136 is amended by:

■ a. Removing paragraphs (b)(4) through (b)(9), and (c)(4) through (c)(9).

■ b. Revising paragraphs (b)(1), (b)(2), (b)(3), (c)(1), (c)(2), and (c)(3).

The revisions read as follows:

§ 21.7136 Rates of payment of basic educational assistance.

* * * * *

(b) *Rates.* (1) Except as elsewhere provided in this section or in § 21.7139, the monthly rate of basic educational assistance payable for training that occurs after September 30, 2004, to a veteran whose service is described in paragraph (a) of this section, is the rate stated in the following table:

Training	Monthly rate
Full time	$1004.00
¾ time	753.00
½ time	502.00
Less than ½ but more than ¼	502.00
¼ time	251.00

(Authority: 38 U.S.C. 3015.)

(2) If a veteran's service is described in paragraph (a) of this section, the monthly rate of basic educational assistance payable to the veteran for pursuit of apprenticeship or other on-the-job training that occurs after September 30, 2004, is the rate stated in the following table:

Training period	Monthly rate
First six months of training	$753.00
Second six months of training	552.20
Remaining pursuit of training	351.40

(Authority: 38 U.S.C. 3015, 3032(c).)

(3) If a veteran's service is described in paragraph (a) of this section, the monthly rate of basic educational assistance payable to the veteran for pursuit of a cooperative course is $1004.00 for training that occurs after September 30, 2004. (Authority: 38 U.S.C. 3015.)

(c) * * *

(1) Except as elsewhere provided in this section or in § 21.7139, the monthly rate of basic educational assistance payable to a veteran for training that occurs after September 30, 2004 is the rate stated in the following table:

Training	Monthly rate
Full time	$816.00
¾ time	612.00
½ time	408.00
Less than ½ but more than ¼	408.00
¼ time or less	204.00

(Authority: 38 U.S.C. 3015.)

(2) The monthly rate of basic educational assistance payable to a veteran for pursuit of apprenticeship or other on-the-job training that occurs after September 30, 2004 is the rate stated in the following table:

Training period	Monthly rate
First six months of training	$612.00
Second six months of training	448.80
Remaining pursuit of training	285.60

(Authority: 38 U.S.C. 3015, 3032(c).)

(3) The monthly rate of basic educational assistance payable to a veteran for pursuit of a cooperative course is $816.00 for training that occurs after September 30, 2004.

(Authority: 38 U.S.C. 3015.)

* * * * *

■ 3. Section 21.7137 is amended by:

■ a. Removing paragraphs (a)(4) through (a)(9).

■ b. Revising paragraphs (a)(1), (a)(2), (a)(3), and (c).

The revisions read as follows:

§ 21.7137 Rates of payment of basic educational assistance for individuals with remaining entitlement under 38 U.S.C. chapter 34.

(a) Minimum rates. (1) Except as elsewhere provided in this section, the monthly rate of basic educational assistance for training that occurs after September 30, 2004 is the rate stated in the following table:

Training	Monthly rate			
	No dependents	One dependent	Two dependents	Additional for each additional dependent
Full time	$1,192.00	$1,228.00	$1,259.00	$16.00
¾ time	894.50	921.00	944.50	12.00
½ time	596.00	614.00	629.50	8.50
Less than ½ but more than ¼ time	596.00	596.00	596.00	0
¼ time or less	298.00	298.00	298.00	0

(Authority: 38 U.S.C. 3015.)

(2) For veterans pursuing apprenticeship or other on-the-job training, the monthly rate of basic educational assistance for training that occurs after September 30, 2004 is the rate stated in the following table:

Training	Monthly rate			
	No dependents	One dependent	Two dependents	Additional for each additional dependent
1st six months of pursuit of program	$855.75	$868.13	$879.00	$5.25
2nd six months of pursuit of program	608.58	617.93	625.63	3.85
3rd six months of pursuit of program	375.20	381.33	386.05	2.45
Remaining pursuit of program	363.30	369.08	374.33	2.45

(Authority: 38 U.S.C. 3015.)

(3) The monthly rate of basic educational assistance payable to a veteran who is pursuing a cooperative course after September 30, 2004, is the rate stated in the following table:

Monthly rate			
No dependents	One dependent	Two dependents	Additional for each additional dependent
$1192.00	$1228.00	$1259.00	$16.00

(Authority: 38 U.S.C. 3015.)

* * * * *

(c) *Rates for servicemembers.* The monthly rate of basic educational assistance for a servicemember may not exceed the lesser of the following rates (except as provided in paragraph (d) of this section):

(1) The monthly pro-rated cost of the course.

(2) The following monthly rates for training that occurs after September 30, 2004—

(i) $1,192.00 for full-time training;

(ii) $894.50 for three-quarter-time training;

(iii) $596.00 for one-half-time training and training that is less than one-half-time training but more than one-quarter-time training; and

(iv) $298.00 for one-quarter-time training.

(Authority: 38 U.S.C. 3015.)

* * * * *

[FR Doc. 04–27474 Filed 12–14–04; 8:45 am]

BILLING CODE 8320–01–P

ENVIRONMENTAL PROTECTION AGENCY

40 CFR Part 63

[R06–OAR–2004–LA–0001; FRL–7847–8]

National Emission Standards for Hazardous Air Pollutants; Delegation of Authority to Louisiana

AGENCY: Environmental Protection Agency (EPA).

ACTION: Direct final rule; delegation of authority.

SUMMARY: The Louisiana Department of Environmental Quality (LDEQ) has submitted updated regulations for receiving delegation of EPA authority for implementation and enforcement of National Emission Standards for Hazardous Air Pollutants (NESHAPs) for certain sources (both part 70 and non-part 70 sources). These regulations apply to certain NESHAPs promulgated by EPA, as amended through July 1, 2003, for 40 CFR part 63 standards. The delegation of authority under this notice does not apply to sources located in Indian Country. EPA is providing notice that it has approved delegation of certain NESHAPs to LDEQ by letter on October 18, 2004.

DATES: This rule is effective on October 18, 2004, without further notice, unless EPA receives adverse comment by January 13, 2005. If EPA receives such comment, EPA will publish a timely withdrawal in the **Federal Register** informing the public that this rule will not take effect.

ADDRESSES: Submit your comments, identified by Regional Material in EDocket (RME) ID No. R06–OAR–2004–LA–0001, by one of the following methods:

- Federal eRulemaking Portal: *http://www.regulations.gov.* Follow the on-line instructions for submitting comments.
- Agency Web site: *http://docket.epa.gov/rmepub/.* Regional Material in Edocket (RME), EPA's electronic public docket and comment system, is EPA's preferred method for receiving comments. Once in the

system, select ''quick search,'' then key in the appropriate RME Docket identification number. Follow the on-line instructions for submitting comments.

• U.S. EPA Region 6 ''Contact Us'' Web site: *http://epa.gov/region6/r6comment.htm.* Please click on ''6PD'' (Multimedia) and select ''Air'' before submitting comments.

• E-mail: Jeff Robinson at *robinson.jeffrey@epa.gov.* Please also cc the person listed in the **FOR FURTHER INFORMATION CONTACT** section below.

• Fax: Mr. Jeff Robinson, Air Permits Section (6PD–R), at fax number (214) 665–7263.

• Mail: Mr. Jeff Robinson, Air Permits Section (6PD–R), Environmental Protection Agency, 1445 Ross Avenue, Suite 1200, Dallas, Texas 75202–2733.

• Hand or Courier Delivery: Mr. Jeff Robinson, Air Permits Section (6PD–R), Environmental Protection Agency, 1445 Ross Avenue, Suite 1200, Dallas, Texas 75202–2733. Such deliveries are accepted only between the hours of 8 a.m. and 4 p.m. weekdays except for legal holidays. Special arrangements should be made for deliveries of boxed information.

Instructions: Direct your comments to Regional Material in EDocket (RME) ID No. R06–OAR–2004–LA–0001. EPA's policy is that all comments received will be included in the public file without change, and may be made available online at *http://docket.epa.gov/rmepub/,* including any personal information provided, unless the comment includes information claimed to be Confidential Business Information (CBI) or other information the disclosure of which is restricted by statute. Do not submit information through Regional Material in EDocket (RME), regulations.gov, or e-mail if you believe that it is CBI or otherwise protected from disclosure. The EPA RME website and the federal regulations.gov are ''anonymous access'' systems, which means EPA will not know your identity or contact information unless you provide it in the body of your comment. If you send an e-mail comment directly to EPA without going through RME or *regulations.gov*, your e-mail address will be automatically captured and included as part of the comment that is placed in the public file and made available on the Internet. If you submit an electronic comment, EPA recommends that you include your name and other contact information in the body of your comment and with any disk or CD-ROM you submit. If EPA cannot read your comment due to technical difficulties and cannot contact you for clarification, EPA may not be able to consider your comment. Electronic files should avoid the use of special characters, any form of encryption, and be free of any defects or viruses.

Docket: All documents in the electronic docket are listed in the Regional Material in EDocket (RME) index at *http://docket.epa.gov/rmepub/.* Although listed in the index, some information is not publicly available, *i.e.*, CBI or other information whose disclosure is restricted by statute. Certain other material, such as copyrighted material, is not placed on the Internet and will be publicly available only in hard copy form. Publicly available docket materials are available either electronically in RME or in the official file which is available at the Air Permitting Section (6PD–R), Environmental Protection Agency, 1445 Ross Avenue, Suite 700, Dallas, Texas 75202–2733. The file will be made available by appointment for public inspection in the Region 6 FOIA Review Room between the hours of 8:30 a.m. and 4:30 p.m. weekdays except for legal holidays. Contact the person listed in the **FOR FURTHER INFORMATION CONTACT** paragraph below to make an appointment. If possible, please make the appointment at least two working days in advance of your visit. There will be a 15 cent per page fee for making photocopies of documents. On the day of the visit, please check in at the EPA Region 6 reception area at 1445 Ross Avenue, Suite 700, Dallas, Texas.

The State submittal is also available for public inspection at the State Air Agency listed below during official business hours by appointment:

Louisiana Department of Environmental Quality, Office of Environmental Assessment, 602 N. Fifth Street, Baton Rouge, Louisiana 70802.

FOR FURTHER INFORMATION CONTACT: Mr. Jeff Robinson, U.S. EPA, Region 6, Multimedia Planning and Permitting Division (6PD), 1445 Ross Avenue, Dallas, TX 75202–2733, telephone (214) 665–6435; fax number (214) 665–7263; or electronic mail at *robinson.jeffrey@epa.gov.*

SUPPLEMENTARY INFORMATION: Throughout this document wherever ''we,'' ''us,'' or ''our'' is used, we mean the EPA.

Table of Contents

I. General Information
II. What Does This Action Do?
III. What Is The Authority for Delegation?
IV. What Criteria Must Louisiana's Program Meet To Be Approved?
V. How Did LDEQ Meet the Subpart E Approval Criteria?
VI. What Is Being Delegated?
VII. What Is Not Being Delegated?
VIII. How Will Applicability Determinations Under Section 112 Be Made?
IX. What Authority Does EPA Have?
X. What Information Must LDEQ Provide to EPA?
XI. What Is EPA's Oversight of This Delegation to LDEQ?
XII. Should Sources Submit Notices to EPA Or LDEQ?
XIII. How Will Unchanged Authorities be Delegated to LDEQ in the Future?
XIV. Final Action
XV. Statutory and Executive Order Reviews

I. General Information

A. Tips for Preparing Your Comments

When submitting comments, remember to:

1. Identify the rulemaking by docket number and other identifying information (subject heading, **Federal Register** date and page number).

2. Follow directions—The agency may ask you to respond to specific questions or organize comments by referencing a Code of Federal Regulations (CFR) part or section number.

3. Explain why you agree or disagree; suggest alternatives and substitute language for your requested changes.

4. Describe any assumptions and provide any technical information and/or data that you used.

5. If you estimate potential costs or burdens, explain how you arrived at your estimate in sufficient detail to allow for it to be reproduced.

6. Provide specific examples to illustrate your concerns, and suggest alternatives.

7. Explain your views as clearly as possible, avoiding the use of profanity or personal threats.

8. Make sure to submit your comments by the comment period deadline identified.

B. Submitting Confidential Business Information (CBI)

Do not submit this information to EPA through regulations.gov or e-mail. Clearly mark the part or all of the information that you claim to be CBI. For CBI information in a disk or CD ROM that you mail to EPA, mark the outside of the disk or CD ROM as CBI and then identify electronically within the disk or CD ROM the specific information that is claimed as CBI. In addition to one complete version of the comment that includes information claimed as CBI, a copy of the comment that does not contain the information claimed as CBI must be submitted for inclusion in the public docket. Information so marked will not be disclosed except in accordance with procedures set forth in 40 CFR part 2.

II. What Does This Action Do?

EPA is taking direct final action to approve the delegation of certain NESHAPs to LDEQ. With this delegation, LDEQ has the primary responsibility to implement and enforce the delegated standards.

III. What Is The Authority for Delegation?

Section 112(l) of the CAA and 40 CFR part 63, Subpart E, authorizes EPA to delegate authority to any state or local agency which submits adequate regulatory procedures for implementation and enforcement of emission standards for hazardous air pollutants. The hazardous air pollutant standards are codified at 40 CFR part 63.

IV. What Criteria Must Louisiana's Program Meet To Be Approved?

EPA previously approved LDEQ's program for the delegation of certain NESHAP standards in 40 CFR part 63 on March 26, 2004 (69 FR 15687), Section 112(l) of the CAA enables EPA to approve State air toxics programs or rules to operate in place of the Federal air toxics program or rules. 40 CFR part 63, Subpart E (Subpart E) governs EPA's approval of State rules or programs under Section 112(l).

EPA will approve an air toxics program if we find that:

(1) The State program is ''no less stringent'' than the corresponding Federal program or rule;

(2) The State has adequate authority and resources to implement the program;

(3) The schedule for implementation and compliance is sufficiently expeditious; and

(4) The program otherwise complies with Federal guidance.

In order to obtain approval of its program to implement and enforce Federal section 112 rules as promulgated without changes (straight delegation), only the criteria of 40 CFR 63.91(d) must be met. 40 CFR 63.91(d)(3) provides that interim or final Title V program approval will satisfy the criteria of 40 CFR 63.91(d) for part 70 sources.

V. How Did LDEQ Meet the Subpart E Approval Criteria?

As part of its Title V submission, LDEQ stated that it intended to use the mechanism of incorporation by reference to adopt unchanged Federal section 112 into its regulations. This applied to both existing and future standards as they applied to part 70 sources. 59 FR 43797 (August 25, 1994) and 60 FR 17750 (April 7, 1995). On September 12, 1995, EPA promulgated final full approval of the State's operating permits program effective October 12, 1995. 60 FR 42296. Under 40 CFR 63.91(d)(2), once a state has satisfied up-front approval criteria, it needs only to reference the previous demonstration and reaffirm that it still meets the criteria for any subsequent submittals. LDEQ has affirmed that it still meets the up-front approval criteria.

In addition, EPA stated in Section XIII of the March 26, 2004, delegation (69 FR 15687) that LDEQ will only need to send a letter of request to EPA Region 6 for future NESHAP delegations where LDEQ has adopted the part 63 regulations into State rules through incorporation by reference. The letter must reference the previous up-front approval demonstration and reaffirm that it still meets the up-front approval criteria. EPA will respond in writing to the request stating that the delegation request is either granted or denied. If the request is approved, the effective date of the delegation will be the date of our response letter to LDEQ. EPA received LDEQ's delegation request letter on September 21, 2004, and responded by letter on October 18, 2004, that the request for delegation was approved.

VI. What Is Being Delegated?

EPA received requests to update the NESHAP delegation on September 21, 2004. LDEQ requested the EPA to update the delegation of authority for the following:

A. NESHAPs (40 CFR part 63 standards) through July 1, 2003.

LDEQ's request was for delegation of certain NESHAP for all sources (both part 70 and non-part 70 sources). The request includes revisions of the NESHAP standards adopted unchanged into Louisiana Administrative Code (LAC) Title 33:III, Chapter 51, Subchapter C, section 5122—Incorporation by Reference of 40 CFR part 63 as it Applies to Major Sources; and Chapter 53, Subchapter B, section 5311—Incorporation by Reference of 40 CFR part 63 as it Applies to Area Sources. For the part 63 NESHAPs, this includes the NESHAPs set forth in Table 1 below. The effective date of the Federal delegation for the part 63 standards below is the date of EPA's response to LDEQ's delegation request letter.

TABLE 1.—40 CFR PART 63 NESHAP FOR SOURCE CATEGORIES

Subpart	Emission standard
J	Polyvinyl Chloride and Copolymers Production.
XX	Ethylene Manufacturing Process Units: Heat Exchange Systems and Waste Operations.
AAAA	Municipal Solid Waste Landfills.
JJJJ	Paper and Other Web Coating.
NNNN	Surface Coating of Large Appliances.
OOOO	Printing, Coating, and Dyeing of Fabrics and Other Textiles.
QQQQ	Surface Coating of Wood Building Products.
RRRR	Surface Coating of Metal Furniture.
WWWW	Reinforced Plastic Composites Production.
XXXX	Tire Manufacturing.
BBBBB	Semiconductor Manufacturing.
CCCCC	Coke Ovens: Pushing, Quenching and Battery Stacks.
FFFFF	Integrated Iron and Steel.
JJJJJ	Brick and Structural Clay Products Manufacturing.
KKKKK	Clay Ceramics Manufacturing.
LLLLL	Asphalt Roofing and Processing.
MMMMM	Flexible Polyurethane Foam Fabrication Operation.
NNNNN	Hydrochloric Acid Production.
PPPPP	Engine Test Facilities.
QQQQQ	Friction Materials Manufacturing.
SSSSS	Refractory Products Manufacturing.

VII. What Is Not Being Delegated?

EPA cannot delegate to a State any of the Category II Subpart A authorities set forth in 40 CFR 63.91(g)(2). These include the following provisions: § 63.6(g), Approval of Alternative Non-Opacity Standards; § 63.6(h)(9), Approval of Alternative Opacity Standards; § 63.7(e)(2)(ii) and (f), Approval of Major Alternatives to Test Methods; § 63.8(f), Approval of Major Alternatives to Monitoring; and § 63.10(f), Approval of Major Alternatives to Recordkeeping and Reporting. In addition, some MACT standards have certain provisions that cannot be delegated to the States [*e.g.* 40 CFR 63.106(b)].[1] Therefore, any MACT standard that EPA is delegating to LDEQ that provides that certain authorities cannot be delegated are retained by EPA and not delegated. Furthermore, no authorities are delegated that require rulemaking in the **Federal Register** to implement, or where Federal overview is the only way to ensure national

[1] On June 23, 2003, EPA modified certain NESHAPs to clarify which authorities can be delegated to State, local, and tribal agencies. 68 FR 37334. However, this delegation is not directly affected by these changes, since LDEQ is receiving delegation of the part 63 standards that were promulgated by EPA, as amended through July 1, 2003.

consistency in the application of the standards or requirements of CAA Section 112. Finally, Section 112(r), the accidental release program authority, is not being delegated by this approval.

All of the inquiries and requests concerning implementation and enforcement of the excluded standards in the State of Louisiana should be directed to the EPA Region 6 Office.

In addition, this delegation to LDEQ to implement and enforce certain NESHAPs does not extend to sources or activities located in Indian country, as defined in 18 U.S.C. 1151. Under this definition, EPA treats as reservations, trust lands validly set aside for the use of a Tribe even if the trust lands have not been formally designated as a reservation. Consistent with previous federal program approvals or delegations, EPA will continue to implement the NESHAPs in Indian country because LDEQ has not adequately demonstrated its authority over sources and activities located within the exterior boundaries of Indian reservations and other areas in Indian country.

VIII. How Will Applicability Determinations Under Section 112 Be Made?

In approving this delegation, LDEQ will obtain concurrence from EPA on any matter involving the interpretation of section 112 of the CAA or 40 CFR part 63 to the extent that implementation, administration, or enforcement of these sections have not been covered by EPA determinations or guidance.

IX. What Authority Does EPA Have?

We retain the right, as provided by CAA section 112(l)(7), to enforce any applicable emission standard or requirement under Section 112. EPA also has the authority to make certain decisions under the General Provisions (Subpart A) of part 63. We are granting LDEQ some of these authorities, and retaining others, as explained in Sections VI and VII above. In addition, EPA may review and disapprove of State determinations and subsequently require corrections. (*See* 40 CFR 63.91(g) and 65 FR 55810, 55823, September 14, 2000.)

Furthermore, we retain any authority in an individual emission standard that may not be delegated according to provisions of the standard.[2] Also, listed in the footnotes of the part 63 delegation table at the end of this rule are the authorities that cannot be delegated to any State or local agency which we therefore retain.

X. What Information Must LDEQ Provide to EPA?

In delegating the authority to implement and enforce these rules and in granting a waiver of EPA notification requirements, we require LDEQ to input all source information into the Aerometric Information Retrieval System (AIRS) for both point and area sources, as applicable. LDEQ must enter this information into the AIRS system and update the information by September 30 of every year. LDEQ must provide any additional compliance related information to EPA, Region 6, Office of Enforcement and Compliance Assurance within 45 days of a request under 40 CFR 63.96(a).

In receiving delegation for specific General Provisions authorities, LDEQ must submit to EPA Region 6 on a semi-annual basis, copies of determinations issued under these authorities. For part 63 standards, these determinations include: applicability determinations (63.1); approval/disapprovals of construction and reconstruction [63.5(e) and (f)]; notifications regarding the use of a continuous opacity monitoring system [63.6(h)(7)(ii)]; finding of compliance [63.6(h)(8)]; approval/disapprovals of compliance extensions [63.6(i)]; approvals/disapprovals of minor [63.7(e)(2)(i)] or intermediate [63.7(e)(2)(ii) and (f)] alternative test methods; approval of shorter sampling times and volumes [63.7(e)(2)(iii)]; waiver of performance testing [63.7(e)(2)(iv) and (h)(2), (3)]; approvals/disapprovals of minor or intermediate alternative monitoring methods [63.8(f)]; approval of adjustments to time periods for submitting reports (63.9 and 63.10); and approvals/disapprovals of minor alternatives to recordkeeping and reporting [63.10(f)].

Additionally, EPA's Emission Measurement Center of the Emissions Monitoring and Analysis Division must receive copies of any approved intermediate changes to test methods or monitoring. (Please note that intermediate changes to test methods must be demonstrated as equivalent through the procedures set out in EPA method 301.) This information on approved intermediate changes to test methods and monitoring will be used to compile a database of decisions that will be accessible to State and local agencies and EPA Regions for reference in making future decisions. (For definitions of *major, intermediate* and *minor* alternative test methods or monitoring methods, see 40 CFR 63.90). The LDEQ should forward these intermediate test methods or monitoring changes via mail or facsimile to: Chief, Source Categorization Group A, EPA (MD–19), Research Triangle Park, NC 27711, Facsimile telephone number: (919) 541–1039.

XI. What Is EPA's Oversight of This Delegation to LDEQ?

EPA must oversee LDEQ's decisions to ensure the delegated authorities are being adequately implemented and enforced. We will integrate oversight of the delegated authorities into the existing mechanisms and resources for oversight currently in place. If, during oversight, we determine that LDEQ made decisions that decreased the stringency of the delegated standards, then LDEQ shall be required to take corrective actions and the source(s) affected by the decisions will be notified, as required by 40 CFR 63.91(g)(1)(ii). We will initiate withdrawal of the program or rule if the corrective actions taken are insufficient.

XII. Should Sources Submit Notices to EPA or LDEQ?

All of the information required pursuant to the Federal NESHAP (40 CFR part 63) should be submitted by sources located outside of Indian country, directly to the LDEQ at the following address: Office of Environmental Services, P.O. Box 4313, Baton Rouge, LA 70821–4313. The LDEQ is the primary point of contact with respect to delegated NESHAPs. Sources do not need to send a copy to EPA. EPA Region 6 waives the requirement that notifications and reports for delegated standards be submitted to EPA in addition to LDEQ in accordance with 40 CFR 63.9(a)(4)(ii) and 63.10(a)(4)(ii).

XIII. How Will Unchanged Authorities Be Delegated to LDEQ in the Future?

In the future, LDEQ will only need to send a letter of request to EPA, Region 6, for those NESHAP regulations that LDEQ has adopted by reference. The letter must reference the previous up-front approval demonstration and reaffirm that it still meets the up-front approval criteria. We will respond in writing to the request stating that the request for delegation is either granted or denied. If a request is approved, the

[2] EPA amended several NESHAPs to clarify the implementation and enforcement authorities within the standards that we may delegate to each State, local or tribal agency such as LDEQ. 68 FR 37334 (June 23, 2003). A complete list of the standards is contained in a copy of the proposal available for review at the Dallas Regional Office. An electronic copy of the proposal may be obtained from EPA's Internet site, *www.epa.gov/ttn/oarpg/t3pfpr.html*. EPA believes the changes make all of the standards consistent in defining what may not be delegated in actions such as the one we are taking today.

effective date of the delegation will be the date of our response letter. A **Federal Register** will be published to inform the public and affected sources of the delegation, indicate where source notifications and reports should be sent, and to amend the relevant portions of the Code of Federal Regulations showing which NESHAP standards have been delegated to LDEQ.

XIV. Final Action

The public was provided the opportunity to comment on the proposed approval of the program and mechanism for delegation of Section 112 standards, as they apply to part 70 sources, on August 24, 1994, for the proposed interim approval of LDEQ's Title V operating permits program; and on April 7, 1995, for the proposed final approval of LDEQ's Title V operating permits program. In EPA's final full approval of Louisiana's Operating Permits Program (60 FR 47296), the EPA discussed the public comments on the proposed delegation of the Title V operating permits program. The public was also given the opportunity to comment on the delegation of authority to Louisiana for National Emission Standards for Hazardous Air Pollutants on March 26, 2004 (69 FR 15687 and 69 FR 15755), and received no public comments on the delegation of authority. In this action, the public is given the opportunity to comment on the approval of LDEQ's request for delegation of authority to implement and enforce certain Section 112 standards for all sources (both part 70 and non-part 70 sources) which have been adopted by reference into Louisiana's state regulations. However, the Agency views the approval of these requests as a noncontroversial action and anticipates no adverse comments. Therefore, EPA is publishing this rule without prior proposal. However, in the ''Proposed Rules'' section of today's **Federal Register** publication, EPA is publishing a separate document that will serve as the proposal to approve the program and delegation of authority described in this action if adverse comments are received. This action was effective on October 18, 2004, without further notice unless the Agency receives relevant adverse comments by January 14, 2005.

If EPA receives adverse comments, we will publish a timely withdrawal in the **Federal Register** informing the public the rule will not take effect. We will address all public comments in a subsequent final rule based on the proposed rule. The EPA will not institute a second comment period on this action. Any parties interested in commenting must do so at this time. Please note that if we receive adverse comment on an amendment, paragraph, or section of this rule and if that provision may be severed from the remainder of the rule, we may adopt as final those provisions of the rule that are not the subject of an adverse comment.

XV. Statutory and Executive Order Reviews

Under Executive Order 12866 (58 FR 51735, October 4, 1993), this action is not a ''significant regulatory action'' and therefore is not subject to review by the Office of Management and Budget. For this reason, this action is also not subject to Executive Order 13211, ''Actions Concerning Regulations That Significantly Affect Energy Supply, Distribution, or Use'' (66 FR 28355, May 22, 2001). This action merely approves state law as meeting Federal requirements and imposes no additional requirements beyond those imposed by state law. Accordingly, the Administrator certifies that this rule will not have a significant economic impact on a substantial number of small entities under the Regulatory Flexibility Act (5 U.S.C. 601 *et seq.*). Because this rule approves pre-existing requirements under state law and does not impose any additional enforceable duty beyond that required by state law, it does not contain any unfunded mandate or significantly or uniquely affect small governments, as described in the Unfunded Mandates Reform Act of 1995 (Public Law 104–4).

This rule also does not have tribal implications because it will not have a substantial direct effect on one or more Indian tribes, on the relationship between the Federal Government and Indian tribes, or on the distribution of power and responsibilities between the Federal Government and Indian tribes, as specified by Executive Order 13175 (65 FR 67249, November 9, 2000). This action also does not have Federalism implications because it does not have substantial direct effects on the States, on the relationship between the national government and the States, or on the distribution of power and responsibilities among the various levels of government, as specified in Executive Order 13132 (64 FR 43255, August 10, 1999). This action merely approves a state request to receive delegation of certain Federal standards, and does not alter the relationship or the distribution of power and responsibilities established in the Clean Air Act. This rule also is not subject to Executive Order 13045 ''Protection of Children from Environmental Health Risks and Safety Risks'' (62 FR 19885, April 23, 1997), because it is not economically significant.

In reviewing delegation submissions, EPA's role is to approve submissions provided that they meet the criteria of the Clean Air Act. In this context, in the absence of a prior existing requirement for the State to use voluntary consensus standards (VCS), EPA has no authority to disapprove a delegation submission for failure to use VCS. It would thus be inconsistent with applicable law for EPA to use VCS in place of a delegation submission that otherwise satisfies the provisions of the Clean Air Act. Thus, the requirements of section 12(d) of the National Technology Transfer and Advancement Act of 1995 (15 U.S.C. 272 note) do not apply. This rule does not impose an information collection burden under the provisions of the Paperwork Reduction Act of 1995 (44 U.S.C. 3501 *et seq.*).

The Congressional Review Act, 5 U.S.C. 801 *et seq.*, as added by the Small Business Regulatory Enforcement Fairness Act of 1996, generally provides that before a rule may take effect, the agency promulgating the rule must submit a rule report, which includes a copy of the rule, to each House of the Congress and to the Comptroller General of the United States. EPA will submit a report containing this rule and other required information to the U.S. Senate, the U.S. House of Representatives, and the Comptroller General of the United States prior to publication of the rule in the **Federal Register**. A major rule cannot take effect until 60 days after it is published in the **Federal Register**. This action is not a ''major rule'' as defined by 5 U.S.C. 804(2).

Under Section 307(b)(1) of the Clean Air Act, petitions for judicial review of this action must be filed in the United States Court of Appeals for the appropriate circuit by February 14, 2005. Filing a petition for reconsideration by the Administrator of this final rule does not affect the finality of this rule for the purposes of judicial review nor does it extend the time within which a petition for judicial review may be filed, and shall not postpone the effectiveness of such rule or action. This action may not be challenged later in proceedings to enforce its requirements. (*See* section 307(b)(2).)

List of Subjects in 40 CFR Part 63

Environmental protection, Air pollution control, Hazardous substances, Intergovernmental relations, Reporting and recordkeeping requirements.

Authority: This action is issued under the authority of Section 112 of the Clean Air Act, as amended, 42 U.S.C. 7412.

Dated: November 24, 2004.

Richard E. Greene,

Regional Administrator, Region 6.

■ 40 CFR part 63 is amended as follows:

PART 63—[AMENDED]

■ 1. The authority citation for part 63 continues to read as follows:

Authority: 42 U.S.C. 7401 *et seq.*

■ 2. Section 63.99 is amended by revising paragraph (a)(18)(i) as follows:

(a) *****

(18) Louisiana.

(i) The following table lists the specific part 63 standards that have been delegated unchanged to the Louisiana Department of Environmental Quality for all sources. The ''X'' symbol is used to indicate each subpart that has been delegated. The delegations are subject to all of the conditions and limitations set forth in Federal law, regulations, policy, guidance, and determinations. Some authorities cannot be delegated and are retained by EPA. These include certain General Provisions authorities and specific parts of some standards. Any amendments made to these rules after this effective date are not delegated.

DELEGATION STATUS FOR PART 63 STANDARDS—STATE OF LOUISIANA [1]

Subpart	Source Category	LDEQ [2,3]
A	General Provisions [2]	X
D	Early Reductions	X
F	Hazardous Organic NESHAP (HON)—Synthetic Organic Chemical Manufacturing Industry (SOCMI)	X
G	HON—SOCMI Process Vents, Storage Vessels, Transfer Operations and Wastewater	X
H	HON—Equipment Leaks	X
I	HON—Certain Processes Negotiated Equipment Leak Regulation	X
J	Polyvinyl Chloride and Copolymers Production	X
K	(Reserved)	
L	Coke Oven Batteries	X
M	Perchloroethylene Dry Cleaning	X
N	Chromium Electroplating and Chromium Anodizing Tanks	X
O	Ethylene Oxide Sterilizers	X
P	(Reserved)	
Q	Industrial Process Cooling Towers	X
R	Gasoline Distribution	X
T	Halogenated Solvent Cleaning	X
U	Group I Polymers and Resins	X
V	(Reserved)	
W	Epoxy Resins Production and Non-Nylon Polyamides Production	X
X	Secondary Lead Smelting	X
Y	Marine Tank Vessel Loading	X
Z	(Reserved)	
AA	Phosphoric Acid Manufacturing Plants	X
BB	Phosphate Fertilizers Production Plants	X
CC	Petroleum Refineries	X
DD	Off-Site Waste and Recovery Operations	X
EE	Magnetic Tape Manufacturing	X
FF	(Reserved)	
GG	Aerospace Manufacturing and Rework Facilities	X
HH	Oil and Natural Gas Production Facilities	X
II	Shipbuilding and Ship Repair Facilities	X
JJ	Wood Furniture Manufacturing Operations	X
KK	Printing and Publishing Industry	X
LL	Primary Aluminum Reduction Plants	X
MM	Chemical Recovery Combustion Sources at Kraft, Soda, Sulfide, and Stand-Alone Semichemical Pulp Mills	X
NN	(Reserved)	
OO	Tanks—Level 1	X
PP	Containers	X
QQ	Surface Impoundments	X
RR	Individual Drain Systems	X
SS	Closed Vent Systems, Control Devices, Recovery Devices and Routing to a Fuel Gas System or a Process	X
TT	Equipment Leaks—Control Level 1	X
UU	Equipment Leaks—Control Level 2 Standards	X
VV	Oil-Water Separators and Organic-Water Separators	X
WW	Storage Vessels (Tanks)—Control Level 2	X
XX	Ethylene Manufacturing Process Units: Heat Exchange Systems and Waste Operations	X
YY	Generic Maximum Achievable Control Technology Standards	X
ZZ–BBB	(Reserved).	
CCC	Steel Pickling—HCl Process Facilities and Hydrochloric Acid Regeneration	X
DDD	Mineral Wool Production	X
EEE	Hazardous Waste Combustors	X
FFF	(Reserved).	
GGG	Pharmaceuticals Production	X
HHH	Natural Gas Transmission and Storage Facilities	X
III	Flexible Polyurethane Foam Production	X
JJJ	Group IV Polymers and Resins	X
KKK	(Reserved)	
LLL	Portland Cement Manufacturing	X

DELEGATION STATUS FOR PART 63 STANDARDS—STATE OF LOUISIANA [1]—Continued

Subpart	Source Category	LDEQ [2,3]
MMM	Pesticide Active Ingredient Production	X
NNN	Wool Fiberglass Manufacturing	X
OOO	Amino/Phenolic Resins	X
PPP	Polyether Polyols Production	X
QQQ	Primary Copper Smelting	X
RRR	Secondary Aluminum Production	X
SSS	(Reserved)	
TTT	Primary Lead Smelting	X
UUU	Petroleum Refineries—Catalytic Cracking Units, Catalytic Reforming Units and Sulfur Recovery Plants	X
VVV	Publicly Owned Treatment Works (POTW)	X
WWW	(Reserved)	
XXX	Ferroalloys Production: Ferromanganese and Silicomanganese	X
AAAA	Municipal Solid Waste Landfills	X
CCCC	Nutritional Yeast Manufacturing	X
GGGG	Solvent Extraction for Vegetable Oil Production	X
HHHH	Wet Formed Fiberglass Mat Production	X
JJJJ	Paper and other Web Coating	X
NNNN	Surface Coating of Large Appliances	X
OOOO	Printing, Coating, and Dyeing of Fabrics and Other Textiles	X
QQQQ	Surface Coating of Wood Building Products	X
RRRR	Surface Coating of Metal Furniture	X
SSSS	Surface Coating for Metal Coil	X
TTTT	Leather Finishing Operations	X
UUUU	Cellulose Production Manufacture	X
VVVV	Boat Manufacturing	X
WWWW	Reinforced Plastic Composites Production	X
XXXX	Tire Manufacturing	X
BBBBB	Semiconductor Manufacturing	X
CCCCC	Coke Ovens: Pushing, Quenching and Battery Stacks	X
FFFFF	Integrated Iron and Steel	X
JJJJJ	Brick and Structural Clay Products Manufacturing	X
KKKKK	Clay Ceramics Manufacturing	X
LLLLL	Asphalt Roofing and Processing	X
MMMMM	Flexible Polyurethane Foam Fabrication Operation	X
NNNNN	Hydrochloric Acid Production, Fumed Silica Production	X
PPPPP	Engine Test Facilities	X
QQQQQ	Friction Products Manufacturing	X
SSSSS	Refractory Products Manufacturing	X

[1] Program delegated to Louisiana Department of Environmental Quality (LDEQ).
[2] Authorities which may not be delegated include: 63.6(g), Approval of Alternative Non-Opacity Emission Standards; 63.6(h)(9), Approval of Alternative Opacity Standards; 63.7(e)(2)(ii) and (f), Approval of Major Alternatives to Test Methods; 63.8(f), Approval of Major Alternatives to Monitoring; 6.3.10(f), Approval of Major Alternatives to Recordkeeping and Reporting; and all authorities identified in the subparts (*e.g.*, under ''Delegation of Authority'') that cannot be delegated.
[3] Federal rules adopted unchanged as of July 1, 2003.

* * * * *

[FR Doc. 04–27361 Filed 12–14–04; 8:45 am]

BILLING CODE 6560–50–P

FEDERAL COMMUNICATIONS COMMISSION

47 CFR Part 54

[CC Docket No. 96–45; FCC 04–237]

Federal-State Joint Board on Universal Service

AGENCY: Federal Communications Commission.

ACTION: Final rule.

SUMMARY: In this document, the Commission addresses various petitions for reconsideration filed in response to the rules adopted in the *First Report and Order* and the *Fourth Order on Reconsideration.* We grant, in part, a petition filed by American Public Communications Council (APCC) and deny petitions filed by APCC and others. We make minor clarifications to our rules based on the issues raised in these petitions as needed.

FOR FURTHER INFORMATION CONTACT: Cathy Carpino, Deputy Chief, Wireline Competition Bureau, Telecommunications Access Policy Division, (202) 418–7400, TTY (202) 418–0484.

SUPPLEMENTARY INFORMATION: This is a summary of the Commission's *Order on Reconsideration,* in CC Docket No. 96–45, FCC 04–237, released November 29, 2004. The full text of this document is available for public inspection during regular business hours in the FCC Reference Center, Room CY-A257, 445 12th Street, SW., Washington, DC 20554.

I. Introduction

1. In this *Order on Reconsideration,* we address various petitions for reconsideration filed in response to the rules adopted in the *First Report and Order,* 62 FR 32862, June 17, 1997, in CC Docket No. 96–45 and the *Fourth Order on Reconsideration,* 63 FR 02093, January 13, 1998, in CC Docket Nos. 96–45, 96–262, 94–1, 91–213, 95–72. We grant, in part, a petition filed by American Public Communications Council (APCC). Based on the record before us, we deny petitions filed by APCC, AT&T, Cellular Telecommunications and Internet Association (CTIA), Lan Neugent and Greg Weisiger (LN/GW), Mobile Satellite Ventures (MSV), National Public Radio (NPR), Puerto Rico Telephone Company

(PRTC), Rural Telephone Coalition (RTC), Southern Educational Communications Association (SECA), United States Telecommunications Association (USTA), Wireless Cable Association (WCA), and Wyoming Public Service Commission (Wyoming Commission); these petitions either raise no facts which have not previously been presented to the Federal Communications Commission (Commission) or are moot. We make minor clarifications to our rules based on the issues raised in these petitions as needed.

II. Discussion

2. In this *Order on Reconsideration,* the Commission addresses petitions for reconsideration of the Commission's *First Report and Order* and *Fourth Order on Reconsideration* to the extent described below.

A. Eligible Telecommunications Carrier

3. We deny MSV's petition for reconsideration of our determination regarding the eligibility of pure resellers to receive universal service support. MSV's petition does not rely on facts that have not previously been presented to the Commission. Rather, MSV merely wishes to argue its different interpretation of the statute. As the Commission already concluded, the statute expressly mandates that, in order to be eligible for universal service subsidies, a carrier must use its ''own facilities'' or a combination of its own facilities and another carrier's services in the provision of supported services. Resellers providing resold services from facilities-based carriers do not use their ''own facilities'' to provide the supported services. As such, pure resellers cannot receive support consistent with this statutory requirement.

4. Moreover, we decline to adopt MSV's request to conclude that advertising in a nationally circulated publication satisfies, *per se,* the statutory requirement to advertise the availability of supported services under section 214(e)(1)(B). In the *First Report and Order,* the Commission declined to adopt nationwide standards for interpreting section 214(e)(1)(B), because it agreed with the Joint Board that states are in a better position to evaluate local conditions and establish advertising guidelines appropriate for the state. MSV has presented no facts that were not previously considered by the Commission at that time. Accordingly, we deny MSV's petition for reconsideration.

B. Rural, Insular, and High Cost Support

1. Indexed Cap on High-Cost Loop Fund

5. We deny RTC's petition for reconsideration. RTC has presented no facts that have not already been presented to the Commission or that warrant reconsideration of the Commission's earlier determinations.

2. Sale of Exchanges

6. We conclude that the issues raised in RTC's supplemental comments concerning § 54.305 of the Commission's rules have already been addressed in the *Rural Task Force Order,* 66 FR 30080, June 5, 2001. RTC has presented no facts that were not already considered at that time. Moreover, RTC's assertion that the rule ignores the need for rural carriers to upgrade facilities they have acquired from non-rural carriers disregards the Commission's amendment of § 54.305 to provide additional funds in such instances. Finally, we note that the Commission recently asked the Joint Board to review whether to retain or modify § 54.305 and we expect that the Joint Board and the Commission will address this issue in that proceeding based on a fresh record. We therefore deny RTC's request.

3. Sufficiency of Support

7. We conclude that PRTC has presented no facts that were not previously considered by the Commission or would lead us to reconsider the Commission's decision in the *First Report and Order* not to treat PRTC as a rural carrier. PRTC simply reiterated previous arguments rejected by the Commission. We also note that PRTC raised similar arguments requesting to be treated as a rural carrier in response to the *Ninth Report and Order,* 64 FR 67416, December 1, 1999, which the Commission denied. We therefore deny PRTC's request for reconsideration of this issue. We note that we do not address at this time PRTC's petition for clarification and/or reconsideration of the *Remand Order,* 68 FR 69622, December 15, 2003, or its request in an *ex parte* letter, filed on June 6, 2003, that the Commission create a separate category of ''non-rural insular'' carriers for purposes of intrastate high-cost support.

8. As the Wyoming Commission acknowledged in its supplemental comments, its specific concerns with the Commission's *First Report and Order* (*i.e.*, the 25 percent limit for non-rural carriers described above and the decision to limit funding for the federal high-cost support mechanism to interstate revenues) have been subsequently addressed. In these supplemental comments, the Wyoming Commission makes only general assertions about the continued insufficiency of the federal high-cost support mechanism for non-rural carriers and the affordability of the total bill to be paid by Wyoming consumers. We find that the Wyoming Commission fails to state with particularity the respects in which it believes the action taken should be changed and, therefore, we deny its petition for reconsideration of *First Report and Order.*

9. We note that since the Wyoming Commission filed its supplemental comments, the Commission has revisited how non-rural carriers receive high-cost support. In the *Remand Order,* the Commission modified the cost benchmark used to calculate support for non-rural carriers, established a rate review process to assess whether rates in rural areas served by non-rural carriers are reasonably comparable to urban rates nationwide, and concluded that states should be permitted to request further federal action, if necessary, based on a showing that federal and state action together are not sufficient to achieve reasonable comparability. The Commission sought further comment on the procedures for filing and processing state requests for further federal action, as well as additional inducements for state action, including additional targeted federal support. In the *Remand Order,* the Commission also denied the Wyoming Commission's petition for reconsideration of the *Ninth Report and Order,* in which the Wyoming Commission raised similar arguments regarding the sufficiency of support for non-rural carriers.

C. Schools, Libraries, and Rural Health Care Providers

1. Wide Area Networks

10. We deny SECA's petition for reconsideration of the *Fourth Order on Reconsideration.* We conclude that SECA failed to present facts that were not previously considered by the Commission or would lead us to reconsider the Commission's findings. Moreover, we note that, subsequent to the filing of SECA's petition for reconsideration, the Commission held that support may be provided under telecommunications service or Internet access for service provider charges for capital investments for WANs. This subsequent action effectively provided SECA an avenue to obtain support for the functionality provided by either a WAN or ITFS technology, thereby largely mooting its petition for

reconsideration. Therefore, we deny SECA's request to provide discounts to schools and libraries for either the purchase of WANs or ITSF systems. We note that pursuant to the *Third Schools Order and Second Further Notice,* 69 FR 6181, February 10, 2004, the issue of WAN's eligibility is currently under consideration by the Commission. SECA's concerns regarding this issue will be considered in that open proceeding.

2. Accounting and Reporting Requirements

11. We clarify requirements as set forth herein and otherwise deny USTA's petition for reconsideration in this area. With regard to USTA's request concerning record-keeping responsibility under the schools and libraries program, we note that § 54.501(d)(3) of the Commission's rules provides that service providers shall keep and retain records of rates charged to and discounts allowed for eligible schools and libraries—on their own or as part of a consortium. In the *Fifth Schools Order,* 69 FR 55097, September 13, 2004, the Commission amended § 54.516 of its rules to require both beneficiaries and service providers to retain all records related to the application for, receipt and delivery of discounted services for a period of five years after the last day of service delivered for a particular Funding Year. As a result, USTA's arguments in its petition concerning record-keeping are now moot.

12. As for the proper allocation of benefits, we note that as part of the application process for the schools and libraries program, an applicant is required to provide specific information on its FCC Form 471 about the eligible services that it has ordered, its cost, and the discount that it is requesting for such services. If the applicant is representing a consortium, the applicant is required to calculate either the specific discount for each member of the consortium or the shared discount for the consortium as a whole. The allocation methodology should be set forth in the contract for services executed with the service provider. If there is no contract for services, as might be the case with some tariffed services, the applicant should provide the service provider with a copy of its allocation methodology. After the applicant has received approval of its request for universal service support, it may notify the provider to begin service. Once the applicant receives service from the provider, the applicant must notify the Administrator to approve the flow of universal service funds to the provider as set forth on its FCC Form 471.

3. Support for Advanced Services

13. We conclude that LN/GW raise no facts that have not previously been considered by the Commission or would warrant expanding the services eligible for discounts under the schools and libraries program at this time. In the *First Report and Order,* the Commission found that the broad purposes of section 254(h)(2) supported its decision to provide discounts for internal connections and Internet access. After analyzing the statute and the record, the Commission determined that the public interest would not be served at that time by providing discounts for additional non-telecommunications services. We find no reason to depart from the Commission's previous decisions in this area based on the current record. Accordingly, we deny LN/GW's request to redefine or expand the list of services that may be eligible for support under the schools and libraries program at this time. We note, however, that in the *Third Schools Order and Second Further Notice* the Commission formalized the process for updating the eligible services list, beginning with Funding Year 2005, in order to promote greater transparency of what is eligible for support under the schools and libraries support mechanism. Under the new rule, the eligible services list is open to comment on an annual basis, allowing any party to provide comments concerning the content and application of the eligible services list. As stated above, the issue of the eligibility of WANs is currently under consideration by the Commission, and LN/GW's concerns regarding this issue will be considered in that open proceeding.

D. Administration of Support Mechanisms

1. Contribution Methodology

14. We deny AT&T's petition to reconsider the universal service contribution methodology. The Commission released an order adopting interim modifications to the contribution methodology in December 2002. In that order, the Commission, among other things, eliminated the lag between the accrual and assessment of universal service contribution obligations as of April 1, 2003, by basing contributions on projected collected end-user telecommunications revenues. The Commission also explicitly rejected a collect-and-remit system. We note, however, that the Commission requested further comment on three specific connection-based proposals. We find that AT&T raises no facts that were not considered and addressed in the *Contribution Methodology Order,* 67 FR 79525, December 30, 2002. Therefore, we dismiss AT&T's request to eliminate the lag as moot and deny the remainder of its petition.

2. Payphone Service Providers

15. We deny APCC's petition to reconsider the Commission's decision to require payphone service providers to contribute to universal service. APCC's petition does not rely on facts that have not previously been presented to the Commission. APCC merely disagrees with the Commission's policy decision.

16. We clarify, however, that to the extent an independent payphone service provider purchases telecommunications for resale in a payphone service and contributes directly to universal service, it should not be considered an end user for purposes of reporting assessable interstate telecommunications revenues and therefore should not be subject to federal universal service pass-through charges. Allowing such a practice results in a double burden for payphone providers that use resold telecommunications services. As described in more detail in the instructions to the Telecommunications Reporting Worksheet, FCC Form 499, such revenues are considered ''carrier's carrier revenues'' or ''revenues from resellers.'' For example, if an independent payphone service provider purchased a payphone line from a local exchange carrier to provide payphone service and contributed directly to universal service for that line, that local exchange carrier should report the payphone line revenues on Line 115, ''Telecommunications provided to other universal service contributors for resale'' on the FCC Form 499–Q. Accordingly, that local exchange carrier would not be directly assessed on the basis of those payphone line revenues and should not pass through universal service charges for that payphone line to the independent payphone service provider. We, therefore, grant APCC's request for clarification as provided herein.

3. Broadcasters

17. We deny the petitions filed by NPR and WCA, to the extent described herein. Our rules already make clear that all broadcasters, including NPR and ITFS licensees, are not required to contribute to the universal service fund to the extent they provide interstate telecommunications on a non-common carrier basis. Since the release of the *Fourth Order on Reconsideration* and subsequent *Errata,* § 54.706(d) has

remained unchanged. To reiterate, the Commission found that the public interest would not be served if the Commission were to require broadcasters, including NPR, to contribute to universal service based on the provision of non-common carrier telecommunications. In addition, by specifically mentioning ITFS licensees in its discussion for why broadcasters should not have to contribute to universal service, the Commission intended to treat ITFS licensees in the same manner as other broadcasters for universal service purposes. As such, modification of § 54.706(d) is unnecessary.

4. Multipoint Distribution Service

18. Although we deny WCA's petition and do not revise our rules to include MDS licensees that lease capacity to wireless cable operators on the list of those entities exempt from universal service obligations, we clarify that MDS licensees are not required to contribute to the universal service fund on the basis of revenues derived from broadcasting services. We further clarify that MDS licensees providing interstate telecommunications to others for a fee on a non-common carrier basis will not be exempt from contribution requirements. Such a result is consistent with section 254(d) of the 1996 Act and §§ 54.706(b) and (c) of the Commission's rules. We find WCA has raised no facts that would prompt us to exempt an MDS licensee that chooses a non-common carrier status but provides services identical to a common carrier licensee, and thus competes with the common carrier, from universal service contribution obligations.

5. De Minimis Exemption

19. We conclude that CTIA has presented no facts that were not previously considered by the Commission or that warrant reconsideration of the Commission's determination that underlying carriers should account for revenues from resellers that fall under the *de minimis* exemption. Section 254(d) explicitly allows the Commission to exempt carriers or classes of carriers from contribution requirements if their contributions would be *de minimis*. Moreover, contrary to CTIA's assertions, directing underlying carriers to exclude revenues from *de minimis* resellers would reduce, rather then enlarge, the total contribution base. We therefore deny CTIA's request for reconsideration of this matter.

20. We clarify, however, that CMRS carriers are required to report revenues derived from providing telecommunications to entities qualifying for the *de minimis* exemption as end-user revenues on the appropriate lines of the Telecommunications Reporting Worksheet. Nothing in the Commission's rules or implementing orders relieves CMRS carriers of this obligation. We further clarify that our current rules do not require underlying facilities-based carriers or CMRS carriers to identify specifically on the Telecommunications Reporting Worksheet their resale customers qualifying for the *de minimis* exemption.

21. The Commission will not send a copy of this *Order on Reconsideration,* in CC Docket No. 96–45, FCC 04–237, released November 29, 2004, pursuant to the Congressional Review Act, *see* 5 U.S.C. 801(a)(1)(A).

III. Ordering Clauses

22. Pursuant to the authority contained in sections 1–4, 201–205, 218–220, 214, 254, 303(r), 403, and 410 of the Communications Act of 1934, as amended, 47 U.S.C. 151–154, 201–205, 218–220, 214, 254, 303(r), 403, and 410, this *Order on Reconsideration* is adopted. Pursuant to the authority contained in section 405 of the Communications Act of 1934, as amended, 47 U.S.C. 405, and 0.291 and 1.429 of the Commission's rules, 47 CFR 0.291 and 1.429, the petitions for reconsideration and supplemental notices of the petitions for reconsideration of the *First Report and Order* filed by the American Public Communications Council in CC Docket No. 96–45 is granted, in part, and denied, in part.

23. Pursuant to the authority contained in section 405 of the Communications Act of 1934, as amended, 47 U.S.C. 405, and sections 0.291 and 1.429 of the Commission's rules, 47 CFR 0.291 and 1.429, the petitions for reconsideration and supplemental notices of the petitions for reconsideration of the *First Report and Order* filed by the AMSC/Mobile Satellite Ventures Subsidiary LLC, AT&T, Puerto Rico Telephone Company, Rural Telephone Coalition, United States Telephone Association, and Wyoming Public Service Commission in CC Docket No. 96–45 are denied.

24. Pursuant to the authority contained in section 405 of the Communications Act of 1934, as amended, 47 U.S.C. 405, and sections 0.291 and 1.429 of the Commission's rules, 47 CFR 0.291 and 1.429, the petitions for reconsideration of the *Fourth Order on Reconsideration* filed by the Cellular Telecommunications and Internet Association, Lan Neugent and Greg Weisiger, National Public Radio, Southern Education Communications Association, and Wireless Cable Association in CC Docket No. 96–45 are denied.

Federal Communications Commission.

Marlene H. Dortch,

Secretary.

[FR Doc. 04–27438 Filed 12–14–04; 8:45 am]

BILLING CODE 6712–01–P

FEDERAL COMMUNICATIONS COMMISSION

47 CFR Part 73

[DA 04–3815, MB Docket No. 04–192, RM–10966]

Digital Television Broadcast Service; Honolulu, HI

AGENCY: Federal Communications Commission.

ACTION: Final rule.

SUMMARY: The Commission, at the request of Pacifica Broadcasting Company, licensee of noncommercial educational station KALO(TV), substitutes DTV channel *10c for DTV channel *39c. *See* 69 FR 34112, June 18, 2004. DTV channel *10c can be allotted to Honolulu in compliance with the principle community coverage requirements of Section 73.625(a) at reference coordinates 21–23045 N. and 158–05–58 W. with a power of 25, HAAT of 577 meters and with a DTV service population of 767 thousand. With this action, this proceeding is terminated.

DATES: Effective January 21, 2005.

FOR FURTHER INFORMATION CONTACT: Pam Blumenthal, Media Bureau, (202) 418–1600.

SUPPLEMENTARY INFORMATION: This is a synopsis of the Commission's Report and Order, MB Docket No. 04–192, adopted December 2, 2004, and released December 7, 2004. The full text of this document is available for public inspection and copying during regular business hours in the FCC Reference Information Center, Portals II, 445 12th Street, SW., Room CY–A257, Washington, DC. This document may also be purchased from the Commission's duplicating contractor, Best Copy and Printing, Inc., 445 12th Street, SW., Room CY–B402, Washington, DC 20554, telephone 301–816–2820, facsimile 301–816–0169, or via-e-mail *joshir@erols.com.*

This document does not contain (new or modified) information collection requirements subject to the Paperwork

Reduction Act of 1995 (PRA), Public Law 104–13. In addition, therefore, it does not contain any new or modified ''information collection burden for small business concerns with fewer than 25 employees,'' pursuant to the Small Business Paperwork Relief Act of 2002, Public Law 107–198, *see* 44 U.S.C. 3506(c)(4).

The Commission will send a copy of this Report & Order in a report to be sent to Congress and the General Accountability Office pursuant to the Congressional Review Act, *see* 5 U.S.C. 801(a)(1)(A).

List of Subjects in 47 CFR Part 73

Digital television broadcasting, Television.

■ Part 73 of Title 47 of the Code of Federal Regulations is amended as follows:

PART 73—[AMENDED]

■ 1. The authority citation for part 73 continues to read as follows:

Authority: 47 U.S.C. 154, 303, 334 and 336.

§ 73.622 [Amended]

■ 2. Section 73.622(b), the Table of Digital Television Allotments under Hawaii, is amended by removing DTV channel *39c and adding DTV channel *10c at Honolulu.

Federal Communications Commission.

Barbara A. Kreisman,

Chief, Video Division, Media Bureau.

[FR Doc. 04–27446 Filed 12–14–04; 8:45 am]

BILLING CODE 6712–01–P

DEPARTMENT OF DEFENSE

48 CFR Parts 203, 209, and 252

[DFARS Case 2003–D012]

Defense Federal Acquisition Regulation Supplement; Improper Business Practices and Contractor Qualifications Relating to Debarment, Suspension, and Business Ethics

AGENCY: Department of Defense (DoD).

ACTION: Final rule.

SUMMARY: DoD has issued a final rule amending the Defense Federal Acquisition Regulation Supplement (DFARS) to streamline and clarify text pertaining to debarment, suspension, and improper business practices. This rule is a result of a transformation initiative undertaken by DoD to dramatically change the purpose and content of the DFARS.

EFFECTIVE DATE: December 15, 2004.

FOR FURTHER INFORMATION CONTACT: Mr. Euclides Barrera, Defense Acquisition Regulations Council, OUSD(AT&L)DPAP(DAR), IMD 3C132, 3062 Defense Pentagon, Washington, DC 20301–3062. Telephone (703) 602–0296; facsimile (703) 602–0350. Please cite DFARS Case 2003-D012.

SUPPLEMENTARY INFORMATION:

A. Background

DFARS Transformation is a major DoD initiative to dramatically change the purpose and content of the DFARS. The objective is to improve the efficiency and effectiveness of the acquisition process, while allowing the acquisition workforce the flexibility to innovate. The transformed DFARS will contain only requirements of law, DoD-wide policies, delegations of FAR authorities, deviations from FAR requirements, and policies/procedures that have a significant effect beyond the internal operating procedures of DoD or a significant cost or administrative impact on contractors or offerors. Additional information on the DFARS Transformation initiative is available at *http://www.acq.osd.mil/dpap/dfars/transf.htm.*

This final rule is a result of the DFARS Transformation initiative. The DFARS changes include—

• Consolidation of requirements for reporting violations and suspected violations of certain requirements into a new section at DFARS 203.070. This results in elimination of DFARS sections 203.103, 203.103–2, and 203.104–10; subparts 203.2, 203.3, and 203.4; and sections 203.502 and 203.570–4.

• Streamlining of text at DFARS 203.570–1 and 203.570–2 relating to prohibitions on persons convicted of fraud or other defense-contract-related felonies.

• Revision of the clause at 252.203–7001, Prohibition on Persons Convicted of Fraud or Other Defense-Contract-Related Felonies, to remove unnecessary references to first-tier subcontracts in paragraphs (b) and (d). Paragraph (g) of the clause adequately addresses requirements for flow down to first-tier subcontracts.

• Deletion of text at DFARS 203.570–3 relating to internal DoD procedures for waiver of the 5-year period for prohibitions on persons convicted of fraud or other defense-contract-related felonies; and deletion of text at DFARS 209.105–2, 209.406–3, and 209.407–3 containing internal DoD procedures for referral of matters to agency debarment and suspension officials. This text has been relocated to the new DFARS companion resource, Procedures, Guidance, and Information (PGI), available at *http://www.acq.osd.mil/dpap/dars/pgi.*

DoD published a proposed rule at 69 FR 8146 on February 23, 2004. Two sources submitted comments on the proposed rule. A discussion of the comments is provided below:

1. *Comment:* Section 203.070, which specifies the violations or suspected violations that must be reported, should also include: the Truth in Negotiations Act (19 U.S.C. 2306(f)); the False Claims Act (31 U.S.C. 3729 *et seq.*); a reference to FAR 9.406–2(a)(3), which lists causes for debarment; and a reference to FAR 9.407–2(a)(3), which lists causes for suspension.

DoD Response: Do not agree. Since section 203.070 falls within the scope of FAR Part 3 and DFARS Part 203, Improper Business Practices and Personal Conflicts of Interest, the violations listed in section 203.070 are limited to those addressed in FAR Part 3 and DFARS Part 203.

2. *Comment:* In section 203.070, the reference to ''DoDD 7075.5'' should be corrected to read ''DoDD 7050.5.''

DoD Response: Agree. This correction has been included in the final rule.

3. *Comment:* In section 203.070(c), the reference to the gratuities clause should be corrected to read ''FAR 3.203.''

DoD Response: Agree. This correction has been included in the final rule.

This rule was not subject to Office of Management and Budget review under Executive Order 12866, dated September 30, 1993.

B. Regulatory Flexibility Act

DoD certifies that this final rule will not have a significant economic impact on a substantial number of small entities within the meaning of the Regulatory Flexibility Act, 5 U.S.C. 601, *et seq.*, because the rule streamlines and clarifies existing DFARS text, with no substantive change in policy.

C. Paperwork Reduction Act

The Paperwork Reduction Act does not apply because the rule does not impose any information collection requirements that require the approval of the Office of Management and Budget under 44 U.S.C. 3501, *et seq.*

List of Subjects in 48 CFR Parts 203, 209, and 252

Government procurement.

Michele P. Peterson,

Executive Editor, Defense Acquisition Regulations Council.

■ Therefore, 48 CFR Parts 203, 209, and 252 are amended as follows:

■ 1. The authority citation for 48 CFR Parts 203, 209, and 252 continues to read as follows:

Authority: 41 U.S.C. 421 and 48 CFR Chapter 1.

PART 203—IMPROPER BUSINESS PRACTICES AND PERSONAL CONFLICTS OF INTEREST

■ 2. Section 203.070 is added to read as follows:

§ 203.070 Reporting of violations and suspected violations.

Report violations and suspected violations of the following requirements in accordance with 209.406–3 or 209.407–3 and DoDD 7050.5, Coordination of Remedies for Fraud and Corruption Related to Procurement Activities:

(a) Certificate of Independent Price Determination (FAR 3.103).

(b) Procurement integrity (FAR 3.104).

(c) Gratuities clause (FAR 3.203).

(d) Antitrust laws (FAR 3.303).

(e) Covenant Against Contingent Fees (FAR 3.405).

(f) Anti-kickback Act (FAR 3.502).

(g) Prohibitions on persons convicted of defense-related contract felonies (203.570).

§ 203.103, 203.103–2, and 203.104–10 [Removed]

■ 3. Sections 203.103, 203.103–2, and 203.104–10 are removed.

Subparts 203.2 through 203.4 [Removed]

■ 4. Subparts 203.2 through 203.4 are removed.

§ 203.502 [Removed]

■ 5. Section 203.502 is removed.

■ 6. Section 203.502–2 is amended by revising the heading to read as follows:

§ 203.502–2 Subcontractor kickbacks.

* * * * *

■ 7. Sections 203.570–1 and 203.570–2 are revised to read as follows:

§ 203.570–1 Scope.

This subpart implements 10 U.S.C. 2408.

§ 203.570–2 Prohibition period.

DoD has sole responsibility for determining the period of the prohibition described in paragraph (b) of the clause at 252.203–7001, Prohibition on Persons Convicted of Fraud or Other Defense-Contract-Related Felonies. The prohibition period—

(a) Shall not be less than 5 years from the date of conviction unless the agency head or a designee grants a waiver in the interest of national security. Follow the waiver procedures at PGI 203.570–2(a); and

(b) May be more than 5 years from the date of conviction if the agency head or a designee makes a written determination of the need for the longer period. The agency shall provide a copy of the determination to the address at PGI 203.570–2(b).

§ 203.570–3 and 203.570–4 [Removed]

■ 8. Sections 203.570–3 and 203.570–4 are removed.

§ 203.570–5 [Redesignated as 203.570–3]

■ 9. Section 203.570–5 is redesignated as section 203.570–3.

PART 209—CONTRACTOR QUALIFICATIONS

■ 10. Section 209.105–2 is revised to read as follows:

§ 209.105–2 Determinations and documentation.

(a) For guidance on submission of determinations to the appropriate debarring and suspending official, see PGI 209.105–2(a).

■ 11. Section 209.406–3 is revised to read as follows:

§ 209.406–3 Procedures.

Refer all matters appropriate for consideration by an agency debarring and suspending official as soon as practicable to the appropriate debarring and suspending official identified in 209.403. Any person may refer a matter to the debarring and suspending official. Follow the procedures at PGI 209.406–3.

■ 12. Section 209.407–3 is revised to read as follows:

§ 209.407–3 Procedures.

Refer all matters appropriate for consideration by an agency debarring and suspending official as soon as practicable to the appropriate debarring and suspending official identified in 209.403. Any person may refer a matter to the debarring and suspending official. Follow the procedures at PGI 209.407–3.

PART 252—SOLICITATION PROVISIONS AND CONTRACT CLAUSES

■ 13. Section 252.203–7001 is amended by revising the introductory text, clause date, paragraph (b), paragraph (d) introductory text, and paragraph (h) to read as follows:

§ 252.203–7001 Prohibition on persons convicted of fraud or other defense-contract-related felonies.

As prescribed in 203.570–3, use the following clause:

Prohibition on Persons Convicted of Fraud or Other Defense-Contract-Related Felonies (Dec 2004)

* * * * *

(b) Any individual who is convicted after September 29, 1988, of fraud or any other felony arising out of a contract with the DoD is prohibited from serving—

(1) In a management or supervisory capacity on this contract;

(2) On the board of directors of the Contractor;

(3) As a consultant, agent, or representative for the Contractor; or

(4) In any other capacity with the authority to influence, advise, or control the decisions of the Contractor with regard to this contract.

* * * * *

(d) 10 U.S.C. 2408 provides that the Contractor shall be subject to a criminal penalty of not more than $500,000 if convicted of knowingly—

* * * * *

(h) Pursuant to 10 U.S.C. 2408(c), defense contractors and subcontractors may obtain information as to whether a particular person has been convicted of fraud or any other felony arising out of a contract with the DoD by contacting The Office of Justice Programs, The Denial of Federal Benefits Office, U.S. Department of Justice, telephone (301) 809–4904.

(End of clause)

[FR Doc. 04–27348 Filed 12–14–04; 8:45 am]

BILLING CODE 5001–08–P

DEPARTMENT OF DEFENSE

48 CFR Part 206

[DFARS Case 2003–D017]

Defense Federal Acquisition Regulation Supplement; Competition Requirements

AGENCY: Department of Defense (DoD).

ACTION: Final rule.

SUMMARY: DoD has issued a final rule amending the Defense Federal Acquisition Regulation Supplement (DFARS) to update text pertaining to competition requirements. This rule is a result of a transformation initiative undertaken by DoD to dramatically change the purpose and content of the DFARS.

EFFECTIVE DATE: December 15, 2004.

FOR FURTHER INFORMATION CONTACT: Ms. Robin Schulze, Defense Acquisition Regulations Council, OUSD(AT&L)DPAP(DAR), IMD 3C132, 3062 Defense Pentagon, Washington, DC 20301–3062. Telephone (703) 602–0326;

facsimile (703) 602–0350. Please cite DFARS Case 2003–D017.

SUPPLEMENTARY INFORMATION:

A. Background

DFARS Transformation is a major DoD initiative to dramatically change the purpose and content of the DFARS. The objective is to improve the efficiency and effectiveness of the acquisition process, while allowing the acquisition workforce the flexibility to innovate. The transformed DFARS will contain only requirements of law, DoD-wide policies, delegations of FAR authorities, deviations from FAR requirements, and policies/procedures that have a significant effect beyond the internal operating procedures of DoD or a significant cost or administrative impact on contractors or offerors. Additional information on the DFARS Transformation initiative is available at *http://www.acq.osd.mil/dpap/dfars/transf.htm.*

This final rule is a result of the DFARS Transformation initiative. The DFARS changes include—

○ Revision of DFARS 206.001 to clarify the text.

○ Deletion of text at DFARS 206.202(b) regarding documentation needed to support a DoD determination to exclude a particular source from a contact action in order to establish or maintain an alternative source of supplies or services; and deletion of text at DFARS 206.302–2 containing examples of circumstances under which use of other than full and open competition may be appropriate due to unusual and compelling urgency. This text has been relocated to the new DFARS companion resource, Procedures, Guidance, and Information (PGI), available at *http://www.acq.osd.mil/dpap/dars/pgi.*

○ Deletion of obsolete text at DFARS 206.302–1(b)(4) and deletion of unnecessary text at DFARS 206.303–1(b) and (c) and 206.303–2.

DoD published a proposed rule at 69 FR 8149 on February 23, 2004. DoD received one comment on the proposed rule. The respondent recommended further revision of the text at 206.001 to clarify that the exception from competition authorized by 10 U.S.C. 1091 applies only to contracts awarded to individuals. DoD has included this clarification in the final rule.

This rule was not subject to Office of Management and Budget review under Executive Order 12866, dated September 30, 1993.

B. Regulatory Flexibility Act

DoD certifies that this final rule will not have a significant economic impact on a substantial number of small entities within the meaning of the Regulatory Flexibility Act, 5 U.S.C. 601, *et seq.*, because the DFARS changes in this rule are limited to clarifying revisions or deletion of text that is unnecessary or internal to DoD.

C. Paperwork Reduction Act

The Paperwork Reduction Act does not apply because the rule does not impose any information collection requirements that require the approval of the Office of Management and Budget under 44 U.S.C. 3501, *et seq.*

List of Subjects in 48 CFR Part 206

Government procurement.

Michele P. Peterson,

Executive Editor, Defense Acquisition Regulations Council.

■ Therefore, 48 CFR Part 206 is amended as follows:

■ 1. The authority citation for 48 CFR Part 206 continues to read as follows:

Authority: 41 U.S.C. 421 and 48 CFR Chapter 1.

PART 206—COMPETITION REQUIREMENTS

■ 2. Section 206.001 is revised to read as follows:

206.001 Applicability.

(b) As authorized by 10 U.S.C. 1091, contracts awarded to individuals using the procedures at 237.104(b)(ii) are exempt from the competition requirements of FAR Part 6.

■ 3. Section 206.202 is revised to read as follows:

206.202 Establishing or maintaining alternative sources.

(a) Agencies may use this authority to totally or partially exclude a particular source from a contract action.

(b) The determination and findings (D&F) and the documentation supporting the D&F shall identify the source to be excluded from the contract action. Include the information at PGI 206.202(b), as applicable, and any other information that may be pertinent, in the supporting documentation.

206.302–1 [Amended]

■ 4. Section 206.302–1 is amended by removing paragraph (b)(4).

■ 5. Section 206.302–2 is revised to read as follows:

206.302–2 Unusual and compelling urgency.

(b) *Application.* For guidance on circumstances under which use of this authority may be appropriate, see PGI 206.302–2(b).

206.303–1 [Amended]

■ 6. Section 206.303–1 is amended by removing paragraphs (b) and (c).

206.303–2 [Removed]

■ 7. Section 206.303–2 is removed.

[FR Doc. 04–27349 Filed 12–14–04; 8:45 am]

BILLING CODE 5001–08–P

DEPARTMENT OF DEFENSE

48 CFR Parts 212, 213, 225, and 252

[DFARS Case 2003–D088]

Defense Federal Acquisition Regulation Supplement; Free Trade Agreements—Chile and Singapore

AGENCY: Department of Defense (DoD).

ACTION: Final rule.

SUMMARY: DoD has adopted as final, with changes, an interim rule amending the Defense Federal Acquisition Regulation Supplement (DFARS) to implement new Free Trade Agreements with Chile and Singapore, as approved by Congress in the United States-Chile Free Trade Agreement Implementation Act and the United States-Singapore Free Trade Agreement Implementation Act. The new Free Trade Agreements waive the applicability of the Buy American Act for some foreign supplies and construction materials from Chile and Singapore, and specify procurement procedures designed to ensure fairness.

EFFECTIVE DATE: December 15, 2004.

FOR FURTHER INFORMATION CONTACT: Ms. Amy Williams, Defense Acquisition Regulations Council, OUSD(AT&L)DPAP(DAR), IMD 3C132, 3062 Defense Pentagon, Washington, DC 20301–3062; telephone (703) 602–0328; facsimile (703) 602–0350. Please cite DFARS Case 2003–D088.

SUPPLEMENTARY INFORMATION:

A. Background

DoD published an interim DFARS rule at 69 FR 1926 on January 13, 2004, to implement new Free Trade Agreements with Chile and Singapore, in accordance with the United States-Chile Free Trade Agreement Implementation Act (Public Law 108–77) and the United States-Singapore Free Trade Agreement Implementation Act (Public Law 108–78). Applicable changes to the Federal Acquisition Regulation (FAR) were published in Federal Acquisition Circular (FAC) 2001–19 on January 7, 2004 (69 FR 1051; Interim rule), and in FAC 2001–25 on October 5, 2004 (69 FR 59700; Final rule).

DoD received no comments on the interim DFARS rule. However, the final rule includes the following additional changes:

• Amendment of the trade agreements clauses at DFARS 252.225–7021, 252.225–7036, and 252.225–7045 to remove the statement that United States law will apply to resolve any claim of breach of contract. This statement is no longer necessary, because the final rule published in FAC 2001–25 contains a new FAR clause, 52.233–4, Applicable Law for Breach of Contract Claim, that is prescribed for inclusion in all contracts.

• A minor amendment at DFARS 225.502(c)(i)(B) to clarify that, in acquisitions subject to a Free Trade Agreement, only eligible products of the applicable Free Trade Agreement country are exempt from application of the Buy American Act or Balance of Payments Program evaluation factor (*e.g.*, for acquisitions between $25,000 and $58,550, a Mexican end product would be a ''NAFTA country end product'' but would not be an ''eligible product,'' in accordance with the thresholds at FAR 25.402).

This rule was not subject to Office of Management and Budget review under Executive Order 12866, dated September 30, 1993.

B. Regulatory Flexibility Act

DoD certifies that this final rule will not have a significant economic impact on a substantial number of small entities within the meaning of the Regulatory Flexibility Act, 5 U.S.C. 601, *et seq.* Although the rule opens up Government procurement to the products of Chile, and lowers the trade agreements threshold for the products of Singapore, the economic impact on U.S. small businesses will not be significant. DoD applies the trade agreements to only those non-defense items listed at DFARS 225.401–70, and acquisitions below $100,000 that are set aside for small businesses are exempt.

C. Paperwork Reduction Act

This rule affects the certification and information collection requirements in the provisions at DFARS 252.225–7020 and 252.225–7035, currently approved by the Office of Management and Budget under Clearance Number 0704–0229. The impact, however, is negligible. In the provision at DFARS 252.225–7020, Trade Agreements Certificate, the offeror no longer has to list offers of end products from Chile as nondesignated country end products. However, offers of Chilean end products would have been unlikely, because purchase of foreign products other than eligible products is prohibited by the Trade Agreements Act. In the provision at DFARS 252.225–7035, Buy American Act—Free Trade Agreements—Balance of Payments Program Certificate, the offeror must list all end products that are not domestic end products. The offeror will list products of Chile and Singapore on the list of Free Trade Agreement country end products, rather than the list of ''other foreign end products.''

List of Subjects in 48 CFR Parts 212, 213, 225, and 252

Government procurement.

Michele P. Peterson,

Executive Editor, Defense Acquisition Regulations Council.

■ Accordingly, the interim rule amending 48 CFR parts 212, 213, 225, and 252, which was published at 69 FR 1926 on January 13, 2004, is adopted as a final rule with the following changes:

■ 1. The authority citation for 48 CFR parts 212, 213, 225, and 252 continues to read as follows:

Authority: 41 U.S.C. 421 and 48 CFR Chapter 1.

PART 225—FOREIGN ACQUISITION

225.502 [Amended]

■ 2. Section 225.502 is amended in paragraph (c)(i)(B) by removing ''end'' and adding in its place ''eligible''.

PART 252—SOLICITATION PROVISIONS AND CONTRACT CLAUSES

252.212–7001 [Amended]

■ 3. Section 252.212–7001 is amended as follows:

■ a. By revising the clause date to read ''(DEC 2004)'';

■ b. In paragraph (b), in entry ''252.225–7021'', by removing ''(JUN 2004)'' and adding in its place ''(DEC 2004)''; and

■ c. In paragraph (b), in entry ''252.225–7036'', by removing ''(JAN 2004)'' the first place it appears and adding in its place ''(DEC 2004)''.

252.225–7021 [Amended]

■ 4. Section 252.225–7021 is amended as follows:

■ a. By revising the clause date to read ''(DEC 2004)'';

■ b. By removing paragraph (e); and

■ c. By redesignating paragraph (f) as paragraph (e).

252.225–7036 [Amended]

■ 5. Section 252.225–7036 is amended as follows:

■ a. By revising the clause date to read ''(DEC 2004)''; and

■ b. By removing paragraph (e).

252.225–7045 [Amended]

■ 6. Section 252.225–7045 is amended as follows:

■ a. By revising the clause date to read ''(DEC 2004)''; and

■ b. By removing paragraph (d).

[FR Doc. 04–27345 Filed 12–14–04; 8:45 am]

BILLING CODE 5001–08–P

DEPARTMENT OF DEFENSE

48 CFR Part 217

[DFARS Case 2003–D097/2004–D023]

Defense Federal Acquisition Regulation Supplement; Contract Period for Task and Delivery Order Contracts

AGENCY: Department of Defense (DoD).

ACTION: Interim rule with request for comments.

SUMMARY: DoD has issued an interim rule amending the Defense Federal Acquisition Regulation Supplement (DFARS) to implement Section 843 of the National Defense Authorization Act for Fiscal Year 2004 and Section 813 of the National Defense Authorization Act for Fiscal Year 2005. Section 843 placed a 5-year limit on the period of task or delivery order contracts awarded under 10 U.S.C. 2304a. Section 813 further amended 10 U.S.C. 2304a to permit a total period of up to 10 years, which may be exceeded if the head of the agency determines in writing that exceptional circumstances require a longer contract period. The DFARS rule clarifies that the 10-year limit applies to the ordering period, establishes a limit on the length of orders, and includes other key information regarding applicability.

DATES: *Effective date:* December 15, 2004.

Comment date: Comments on the interim rule should be submitted to the address shown below on or before February 14, 2005, to be considered in the formation of the final rule.

ADDRESSES: You may submit comments, identified by DFARS Case 2003–D097, using any of the following methods:

• Federal eRulemaking Portal: *http://www.regulations.gov.* Follow the instructions for submitting comments.

• Defense Acquisition Regulations Web Site: *http://emissary.acq.osd.mil/dar/dfars.nsf/pubcomm.* Follow the instructions for submitting comments.

• E-mail: *dfars@osd.mil.* Include DFARS Case 2003–D097 in the subject line of the message.

- Fax: (703) 602–0350.
- Mail: Defense Acquisition Regulations Council, Attn: Ms. Robin Schulze, OUSD(AT&L)DPAP(DAR), IMD 3C132, 3062 Defense Pentagon, Washington, DC 20301–3062.
- Hand Delivery/Courier: Defense Acquisition Regulations Council, Crystal Square 4, Suite 200A, 241 18th Street, Arlington, VA 22202–3402.

All comments received will be posted to *http://emissary.acq.osd.mil/dar/dfars.nsf.*

FOR FURTHER INFORMATION CONTACT: Robin Schulze, (703) 602–0326.

SUPPLEMENTARY INFORMATION:

A. Background

This interim rule implements Section 843 of the National Defense Authorization Act for Fiscal Year 2004 (Pub. L. 108–136) and Section 813 of the National Defense Authorization Act for Fiscal Year 2005 (Pub. L. 108–375). Section 843 amended the general authority for task and delivery order contracts at 10 U.S.C. 2304a to specify that a task or delivery order contract entered into under that section may cover a total period of not more than 5 years. Section 813 further amended 10 U.S.C. 2304a to permit a total ordering period of not more than 10 years, unless the head of the agency determines in writing that exceptional circumstances necessitate a longer ordering period.

DoD published an interim rule implementing Section 843 of Public Law 108–136 at 69 FR 13478 on March 23, 2004. Twenty-three respondents submitted comments on the interim rule. A discussion of the comments is provided below. This second interim rule implements Section 813 of Public Law 108–375 and incorporates changes made as a result of public comments received on the interim rule published on March 23, 2004. Differences between the first and second interim rules are addressed in the discussion of comments 1, 2, 3, and 7 below.

1. *Comment: Ordering period vice period of performance.* Twelve respondents expressed concern that the rule did not specify whether the 5-year limit applies to the ordering period or the period of performance. Respondents pointed out that if performance is limited to 5 years, the end result is that this type of contract may only be able to have a base year and 2 or 3 option years to ensure that all work is completed by the end of the fifth year.

DoD Response: The second interim rule incorporates the 10-year limit allowed by Section 813 and clarifies that the limit applies to the ordering period. In making this clarification, DoD determined that it was important to establish a reasonable limit on the period of performance for task or delivery orders issued during the ordering period and established such a limit in the rule at 217.204(e)(iii).

2. *Comment: Six-month extension for services.* Two respondents raised concerns as to whether the 5-year limit imposed by Section 843 was inclusive of any 6-month extension permitted by the clause at FAR 52.217–8, Option to Extend Services. Another respondent identified the exception at FAR 16.505(c)(2)(ii) for contracted advisory and assistance services that permits such contracts to exceed 5 years by 6 months in certain circumstances. This respondent suggested that the DFARS rule supplement FAR 16.505(c)(2) to clarify whether contracts for advisory and assistance services can be longer than 5 years.

DoD Response: For contracts issued pursuant to 10 U.S.C. 2304a, the ordering period is restricted to a maximum of 10 years unless the head of the agency determines in writing that exceptional circumstances require a longer ordering period. However, the performance period of an order may extend no more than 1 year beyond the 10-year limit or extended limit unless approved by the senior procurement executive. The authority at FAR 16.505(c)(2)(ii), for advisory and assistance services, derives from 10 U.S.C. 2304b and is unaffected by Section 843 or 813, which limit only task or delivery order contracts awarded pursuant to 10 U.S.C. 2304a. The second interim rule clarifies that contracts for advisory and assistance services are governed by the requirements of 10 U.S.C. 2304b and FAR 16.505(c).

3. *Comment: Exception for Information Technology.* One respondent suggested that the 5-year limit imposed by Section 843 should not apply to information technology contracts and that the rule should be clarified to identify this exception. The respondent identified the Clinger-Cohen Act (Pub. L. 104–106) as the authority for the exception for information technology.

DoD Response: The Clinger-Cohen Act does not provide an exception for information technology. The limits in Sections 843 and 813 apply to all task and delivery order contracts awarded under 10 U.S.C. 2304a, including those for information technology. The second interim rule clarifies this point at 217.204(e)(ii).

4. *Comment: Applicability to contracts awarded before the interim rule.* One respondent requested that the rule address the applicability of Section 843 to contracts awarded after the enactment of Section 843, but before the issuance of the interim rule. Another respondent assumed that the 5-year limit precluded agencies from placing orders under contracts awarded prior to the enactment of Section 843. Another respondent expressed concern that some of the military departments unilaterally implemented the 5-year limit for existing indefinite-delivery indefinite-quantity contracts or chose to implement the limit for new solicitations issued prior to the effective date of the rule. Two respondents recommended that the background information for the rule state that the 5-year limit is applicable only to contracts that result from solicitations issued on or after March 23, 2004.

DoD Response: Generally, statutes take effect on the date of enactment unless they expressly state a different effective date (*e.g.*, ''upon implementation in regulations, or 180 days, whichever comes first''). Consistent with FAR 1.108(d), as a matter of policy, the DFARS implementation of the Section 843 limitation was effective for solicitations issued on or after March 23, 2004, the date of publication of the first interim rule. The DFARS implementation of the Section 813 limitation is effective on the date of publication of this second interim rule. In accordance with FAR 1.108(d)(2), contracting officers may amend solicitations issued before the effective date of this second interim rule to incorporate the longer ordering period.

5. *Comment: Applicability to existing contracts.* One respondent raised questions about the applicability of the 5-year limit to new solicitations issued for new delivery orders to be awarded against existing contracts. Specifically, whether the 5-year limit (1) would apply to the entire contract, including previously awarded delivery orders; (2) would apply to merely the single delivery order and any additional delivery orders solicited after the interim rule; or (3) would not apply. Another respondent questioned whether an existing contract that has a 7-year ordering period but has reached a quantity or dollar ceiling in 5 years could be modified, with a justification and approval, to increase the ceiling. The same respondent questioned whether an existing contract could be modified to extend the ordering period beyond 5 years.

DoD Response: Neither Section 843 nor 813 has retroactive effect. Under Section 813, a contracting officer may exercise existing options and may modify existing contracts to add new

options or otherwise extend the ordering period up to 10 years, or longer if authorized by the head of the agency. Additionally, an existing contract may be modified to extend the existing ordering period, provided the justification for the new work is documented in a justification and approval in accordance with FAR 6.304.

6. *Comment: Options on Orders and Within Scope Changes.* One respondent requested that the rule address the use of option periods attached to task and delivery orders. The respondent suggested that every order should be permitted to contain up to four option periods. Another respondent suggested that within-scope changes could extend the ordering period beyond 5 years and requested that the rule clarify whether the 5-year limit applies to within-scope changes.

DoD Response: Options and modifications may be issued to extend the total ordering period for a contract or an individual order; however, the total ordering period may not exceed 10 years unless authorized by the head of the agency.

7. *Comment: Disappointed with Implementation.* Two respondents expressed disappointment that DoD rushed to implement Section 843 and that the interim rule provided only the barest coverage. The respondents recommended that the final rule expand the coverage to include key elements from the question and answer document made available on the Defense Procurement and Acquisition Policy Web site.

DoD Response: DoD has a responsibility to promptly implement laws enacted by Congress. It was also necessary to issue an interim rule to ensure consistent implementation within DoD. The second interim rule has been expanded to include key elements regarding applicability from the question and answer document and changes required by the enactment of Section 813.

8. *Comment: Program Impacts.* Four respondents identified programs or missions that will be impacted by the 5-year limit.

DoD Response: DoD agrees that the 5-year limit may have had an adverse impact on the ability of agencies to accomplish their missions. The second interim rule minimizes the impact to the extent permitted by Section 813.

This rule was not subject to Office of Management and Budget review under Executive Order 12866, dated September 30, 1993.

B. Regulatory Flexibility Act

DoD has prepared an initial regulatory flexibility analysis consistent with 5 U.S.C. 604. The analysis is summarized as follows: This interim rule applies to all new DoD solicitations for supplies or services that will result in a task or delivery order contract awarded under the authority of 10 U.S.C. 2304a. It may affect businesses interested in submitting offers for such contracts. The impact on small entities is unknown at this time. DoD invites comments from small businesses and other interested parties. DoD also will consider comments from small entities concerning the affected DFARS subpart in accordance with 5 U.S.C. 610. Such comments should be submitted separately and should cite DFARS Case 2003–D097.

C. Paperwork Reduction Act

The Paperwork Reduction Act does not apply, because the rule does not impose any information collection requirements that require the approval of the Office of Management and Budget under 44 U.S.C. 3501, *et seq.*

D. Determination To Issue an Interim Rule

A determination has been made under the authority of the Secretary of Defense that urgent and compelling reasons exist to publish an interim rule prior to affording the public an opportunity to comment. This interim rule implements Section 813 of the National Defense Authorization Act for Fiscal Year 2005 (Pub. L. 108–375). Section 813 provides that the total period of a task or delivery order contract awarded under 10 U.S.C. 2304a may not exceed 10 years, unless the head of the agency determines in writing that exceptional circumstances require a longer contract period. Section 813 became effective upon enactment on October 28, 2004. Comments received in response to this interim rule will be considered in the formation of the final rule.

List of Subjects in 48 CFR Part 217

Government procurement.

Michele P. Peterson,

Executive Editor, Defense Acquisition Regulations Council.

■ Therefore, 48 CFR part 217 is amended as follows:

■ 1. The authority citation for 48 CFR part 217 continues to read as follows:

Authority: 41 U.S.C. 421 and 48 CFR Chapter 1.

PART 217—SPECIAL CONTRACTING METHODS

■ 2. Section 217.204 is revised to read as follows:

217.204 Contracts.

(e)(i) Notwithstanding FAR 17.204(e), the ordering period of a task order or delivery order contract awarded by DoD pursuant to 10 U.S.C. 2304a—

(A) May be for any period up to 5 years;

(B) May be subsequently extended for one or more successive periods in accordance with an option provided in the contract or a modification of the contract; and

(C) Shall not exceed 10 years unless the head of the agency determines in writing that exceptional circumstances require a longer ordering period.

(ii) DoD must submit a report to Congress when an ordering period is extended beyond 10 years in accordance with paragraph (e)(i)(C) of this section. Follow the procedures at PGI 217.204(e) for reporting requirements.

(iii) Paragraph (e)(i) of this section—

(A) Also applies to information technology task or delivery order contracts;

(B) Does not apply to contracts, including task or delivery order contracts, awarded under other statutory authority; and

(C) Does not apply to the following:

(1) Advisory and assistance service task order contracts (authorized by 10 U.S.C. 2304b that are limited by statute to 5 years, with the authority to extend an additional 6 months (see FAR 16.505(c)).

(2) Definite-quantity contracts.

(3) GSA schedule contracts.

(4) Multi-agency contracts awarded by agencies other than NASA, DoD, or the Coast Guard.

(iv) Obtain approval from the senior procurement executive before issuing an order against a task or delivery order contract subject to paragraph (e)(i) of this section, if performance under the order is expected to extend more than 1 year beyond the 10-year limit or extended limit described in paragraph (e)(i)(C) of this section (see FAR 37.106 for funding and term of service contracts).

[FR Doc. 04–27346 Filed 12–14–04; 8:45 am]

BILLING CODE 5001–08–P

DEPARTMENT OF DEFENSE

48 CFR Part 219 and Appendix I to Chapter 2

[DFARS Case 2003–D013]

Defense Federal Acquisition Regulation Supplement; DoD Pilot Mentor-Protégé Program

AGENCY: Department of Defense (DoD).

ACTION: Final rule.

SUMMARY: DoD has issued a final rule amending the Defense Federal Acquisition Regulation Supplement (DFARS) to update policy pertaining to the DoD Pilot Mentor-Protégé Program. The rule authorizes the Director, Small and Disadvantaged Business Utilization, of each military department and defense agency to approve mentor firms and mentor-protégé agreements.

EFFECTIVE DATE: December 15, 2004.

FOR FURTHER INFORMATION CONTACT: Mr. Thaddeus Godlewski, Defense Acquisition Regulations Council, OUSD(AT&L)DPAP(DAR), IMD 3C132, 3062 Defense Pentagon, Washington, DC 20301–3062. Telephone (703) 602–2022; facsimile (703) 602–0350. Please cite DFARS Case 2003–D013.

SUPPLEMENTARY INFORMATION:

A. Background

This final rule authorizes the Director, Small and Disadvantaged Business Utilization (SADBU), of each military department and defense agency to approve mentor firms and mentor-protégé agreements under the DoD Pilot Mentor-Protégé Program. The Director, Office of the Secretary of Defense, SADBU, will retain policy and oversight responsibility for the offices participating in the Program and will remain the principal budget authority for the Program. This rule also updates procedures for implementation of the Mentor-Protégé Program.

DoD published a proposed rule at 69 FR 26533 on May 13, 2004. Two respondents submitted comments on the proposed rule. One respondent expressed support for the rule. The other respondent recommended amendment of the rule to allow service-disabled veteran-owned small business concerns to participate as protégé firms. Statutory authority permitting participation of service-disabled veteran-owned small business concerns as protégé firms was provided in Section 842 of the National Defense Authorization Act for Fiscal Year 2005 (Public Law 108–375) on October 28, 2004. DoD will be implementing the new authority provided by Section 842 separately under DFARS Case 2004–D028. Therefore, DoD has adopted the proposed rule published on May 13, 2004, as a final rule without change.

This rule was not subject to Office of Management and Budget review under Executive Order 12866, dated September 30, 1993.

B. Regulatory Flexibility Act

DoD certifies that this final rule will not have a significant economic impact on a substantial number of small entities within the meaning of the Regulatory Flexibility Act, 5 U.S.C. 601, *et seq.*, because the changes in the rule relate primarily to administrative aspects of the DoD Pilot Mentor-Protégé Program. The basic principles of the Program have not changed.

C. Paperwork Reduction Act

The information collection requirements of the DoD Pilot Mentor Protégé Program have been approved by the Office of Management and Budget under Control Number 0704–0332 for use through May 31, 2007.

List of Subjects in 48 CFR Part 219

Government procurement.

Michele P. Peterson,

Executive Editor, Defense Acquisition Regulations Council.

■ Therefore, 48 CFR part 219 and appendix I to chapter 2 are amended as follows:

■ 1. The authority citation for 48 CFR part 219 and appendix I to subchapter I continues to read as follows:

Authority: 41 U.S.C. 421 and 48 CFR Chapter 1.

PART 219—SMALL BUSINESS PROGRAMS

■ 2. Section 219.7100 is amended by revising the first sentence to read as follows:

219.7100 Scope.

This subpart implements the Pilot Mentor-Protégé Program (hereafter referred to as the ''Program'') established under Section 831 of the National Defense Authorization Act for Fiscal Year 1991 (Public Law 101–510; 10 U.S.C. 2302 note). * * *

■ 3. Section 219.7102 is amended by revising paragraphs (a) and (d) to read as follows:

219.7102 General.

* * * * *

(a) Mentor firms that are prime contractors with at least one active subcontracting plan negotiated under FAR Subpart 19.7 or under the DoD Comprehensive Subcontracting Test Program.

* * * * *

(d) Incentives that DoD may provide to mentor firms, including—

(1) Reimbursement for developmental assistance costs through—

(i) A separately priced contract line item on a DoD contract; or

(ii) A separate contract, upon written determination by the cognizant Component Director, Small and Disadvantaged Business Utilization (SADBU), that unusual circumstances justify reimbursement using a separate contract; or

(2) Credit toward applicable subcontracting goals, established under a subcontracting plan negotiated under FAR Subpart 19.7 or under the DoD Comprehensive Subcontracting Test Program, for developmental assistance costs that are not reimbursed.

■ 4. Section 219.7103–1 is revised to read as follows:

219.7103–1 General.

The procedures for application, acceptance, and participation in the Program are in Appendix I, Policy and Procedures for the DoD Pilot Mentor-Protégé Program. The Director, SADBU, of each military department or defense agency has the authority to approve contractors as mentor firms, approve mentor-protégé agreements, and forward approved mentor-protégé agreements to the contracting officer when funding is available.

■ 5. Section 219.7103–2 is amended as follows:

■ a. By revising paragraphs (d), (e), and (f); and

■ b. In paragraph (h), in the parenthetical, by removing ''I–112'' and adding in its place ''I–113''. The revised text reads as follows:

219.7103–2 Contracting officer responsibilities.

* * * * *

(d) Modify applicable contract(s) to establish a contract line item for reimbursement of developmental assistance costs if—

(1) A DoD program manager or the cognizant Component Director, SADBU, has made funds available for that purpose; and

(2) The contractor has an approved mentor-protégé agreement.

(e) Negotiate and award a separate contract for reimbursement of developmental assistance costs only if—

(1) Funds are available for that purpose;

(2) The contractor has an approved mentor-protégé agreement; and

(3) The cognizant Component Director, SADBU, has made a

determination in accordance with 219.7102(d)(1)(ii).

(f) Not authorize reimbursement for costs of assistance furnished to a protégé firm in excess of $1,000,000 in a fiscal year unless a written determination from the cognizant Component Director, SADBU, is obtained.

* * * * *

219.7105 [Amended]

■ 6. Section 219.7105 is amended by removing ''I–111'' and adding in its place ''I–112''.

219.7106 [Amended]

■ 7. Section 219.7106 is amended in the first sentence by removing ''I–112'' and adding in its place ''I–113''.

■ 8. Appendix I to Chapter 2 is revised to read as follows:

Appendix I—Policy and Procedures for the DOD Pilot Mentor-Protege Program

I–100 Purpose.

(a) This Appendix I to 48 CFR Chapter 2 implements the Pilot Mentor-Protégé Program (hereafter referred to as the ''Program'') established under Section 831 of Public Law 101–510, the National Defense Authorization Act for Fiscal Year 1991 (10 U.S.C. 2302 note). The purpose of the Program is to—

(1) Provide incentives to major DoD contractors, performing under at least one active approved subcontracting plan negotiated with DoD or another Federal agency, to assist protégé firms in enhancing their capabilities to satisfy DoD and other contract and subcontract requirements;

(2) Increase the overall participation of protégé firms as subcontractors and suppliers under DoD contracts, other Federal agency contracts, and commercial contracts; and

(3) Foster the establishment of long-term business relationships between protégé firms and such contractors.

(b) Under the Program, eligible companies approved as mentor firms will enter into mentor-protégé agreements with eligible protégé firms to provide appropriate developmental assistance to enhance the capabilities of the protégé firms to perform as subcontractors and suppliers. DoD may provide the mentor firm with either cost reimbursement or credit against applicable subcontracting goals established under contracts with DoD or other Federal agencies.

(c) DoD will measure the overall success of the Program by the extent to which the Program results in—

(1) An increase in the dollar value of contract and subcontract awards to protégé firms (under DoD contracts, contracts awarded by other Federal agencies, and commercial contracts) from the date of their entry into the Program until 2 years after the conclusion of the agreement;

(2) An increase in the number and dollar value of subcontracts awarded to a protégé firm (or former protégé firm) by its mentor firm (or former mentor firm);

(3) An increase in the employment level of protégé firms from the date of entry into the Program until 2 years after the completion of the agreement.

(d) This policy sets forth the procedures for participation in the Program applicable to companies that are interested in receiving—

(1) Reimbursement through a separate contract line item in a DoD contract or a separate contract with DoD; or

(2) Credit toward applicable subcontracting goals for costs incurred under the Program.

I–101 Definitions.

I–101.1 Historically Black college or university.

An institution determined by the Secretary of Education to meet the requirements of 34 CFR 608.2. The term also means any nonprofit research institution that was an integral part of such a college or university before November 14, 1986.

I–101.2 Minority institution of higher education.

An institution of higher education with a student body that reflects the composition specified in section 312(b)(3), (4), and (5) of the Higher Education Act of 1965 (20 U.S.C. 1058(b)(3), (4), and (5)).

I–101.3 Eligible entity employing the severely disabled.

A business entity operated on a for-profit or nonprofit basis that—

(a) Uses rehabilitative engineering to provide employment opportunities for severely disabled individuals and integrates severely disabled individuals into its workforce;

(b) Employs severely disabled individuals at a rate that averages not less than 20 percent of its total workforce;

(c) Employs each severely disabled individual in its workforce generally on the basis of 40 hours per week; and

(d) Pays not less than the minimum wage prescribed pursuant to section 6 of the Fair Labor Standards Act (29 U.S.C. 206) to those employees who are severely disabled individuals.

I–101.4 Severely disabled individual.

An individual who has a physical or mental disability which constitutes a substantial handicap to employment and which, in accordance with criteria prescribed by the Committee for the Purchase from the Blind and Other Severely Handicapped established by the first section of the Act of June 25, 1938 (41 U.S.C. 46; popularly known as the ''Javits-Wagner-O'Day Act'') is of such a nature that the individual is otherwise prevented from engaging in normal competitive employment.

I–101.5 Small disadvantaged business (SDB).

A small business concern that is—

(a) An SDB concern as defined at 219.001, paragraph (1) of the definition of ''small disadvantaged business concern'';

(b) A business entity owned and controlled by an Indian tribe as defined in Section 8(a)(13) of the Small Business Act (15 U.S.C. 637(a)(13)); or

(c) A business entity owned and controlled by a Native Hawaiian Organization as defined in Section 8(a)(15) of the Small Business Act.

I–101.6 Women-owned small business (WOSB).

A small business concern owned and controlled by women as defined in Section 8(d)(3)(D) of the Small Business Act (15 U.S.C. 637(d)(3)(D)).

I–102 Participant eligibility.

(a) To be eligible to participate as a mentor, an entity must be—

(1) An entity other than small business, unless a waiver to the small business exception has been obtained from the Director, Small and Disadvantaged Business Utilization (SADBU), OUSD (AT&L), that is a prime contractor to DoD with an active subcontracting plan; or

(2) A graduated 8(a) firm that provides documentation of its ability to serve as a mentor; and

(3) Approved to participate as a mentor in accordance with I–105.

(b) To be eligible to participate as a proteégé, an entity must be—

(1) An SDB, a WOSB, or an eligible entity employing the severely disabled;

(2) Eligible for the award of Federal contracts; and

(3) A small business according to the Small Business Administration (SBA) size standard for the North American Industry Classification System (NAICS) code that represents the contemplated supplies or services to be provided by the protégé firm to the mentor firm if the firm is representing itself as a qualifying entity under the definition at I–101.5(a) or I–101.6.

(c) Mentor firms may rely in good faith on a written representation that the entity meets the requirements of paragraph (a) of this section, except for a protégé's status as a small disadvantaged business concern (see FAR 19.703(b)).

(d) If at any time the SBA (or DoD in the case of entities employing the severely disabled) determines that a protégé is ineligible, assistance that the mentor firm furnishes to the protégé after the date of the determination may not be considered assistance furnished under the Program.

(e) A company may not be approved for participation in the Program as a mentor firm if, at the time of requesting participation in the Program, it is currently debarred or suspended from contracting with the Federal Government pursuant to FAR Subpart 9.4.

(f) If the mentor firm is suspended or debarred while performing under an approved mentor-protégé agreement, the mentor firm—

(1) May continue to provide assistance to its protégé firms pursuant to approved mentor-protégé agreements entered into prior to the imposition of such suspension or debarment;

(2) May not be reimbursed or take credit for any costs of providing developmental assistance to its protégé firm, incurred more than 30 days after the imposition of such suspension or debarment; and

(3) Must promptly give notice of its suspension or debarment to its protégé firm and the cognizant Component Director, SADBU.

I–103 Program duration.

(a) New mentor-protégé agreements may be submitted and approved through September 30, 2005.

(b) Mentors incurring costs prior to September 30, 2008, pursuant to an approved mentor-protégé agreement may be eligible for—

(1) Credit toward the attainment of its applicable subcontracting goals for unreimbursed costs incurred in providing developmental assistance to its protégé firm(s);

(2) Reimbursement pursuant to the execution of a separately priced contract line item added to a DoD contract; or

(3) Reimbursement pursuant to entering into a separate DoD contract upon determination by the cognizant Component Director, SADBU, that unusual circumstances justify using a separate contract.

I–104 Selection of protégé firms.

(a) Mentor firms will be solely responsible for selecting protégé firms. Mentor firms are encouraged to identify and select concerns that are defined as emerging SDB protégé firms.

(b) The selection of protégé firms by mentor firms may not be protested, except as in paragraph (c) of this section.

(c) In the event of a protest regarding the size or disadvantaged status of an entity selected to be a protégé firm as defined in I–101.5, the mentor firm must refer the protest to the SBA to resolve in accordance with 13 CFR part 121 (with respect to size) or 13 CFR part 124 (with respect to disadvantaged status).

(d) For purposes of the Small Business Act, no determination of affiliation or control (either direct or indirect) may be found between a protégé firm and its mentor firm on the basis that the mentor firm has agreed to furnish (or has furnished) to its protégé firm, pursuant to a mentor-protégé agreement, any form of developmental assistance described in I–107(f).

(e) A protégé firm may have only one active DoD mentor-protégé agreement.

I–105 Mentor approval process.

(a) An entity seeking to participate as a mentor must apply to the cognizant Component Director, SADBU, to establish its initial eligibility as a mentor. This application may accompany its initial mentor-protégé agreement.

(b) The application must provide the following information:

(1) A statement that the company is currently performing under at least one active approved subcontracting plan negotiated with DoD or another Federal agency pursuant to FAR 19.702, and that the company is currently eligible for the award of Federal contracts or a statement that the entity is a graduated 8(a) firm.

(2) A summary of the company's historical and recent activities and accomplishments under its small and disadvantaged business utilization program.

(3) The total dollar amount of DoD contracts and subcontracts that the company received during the 2 preceding fiscal years. (Show prime contracts and subcontracts separately per year.)

(4) The total dollar amount of all other Federal agency contracts and subcontracts that the company received during the 2 preceding fiscal years. (Show prime contracts and subcontracts separately per year.)

(5) The total dollar amount of subcontracts that the company awarded under DoD contracts during the 2 preceding fiscal years.

(6) The total dollar amount of subcontracts that the company awarded under all other Federal agency contracts during the 2 preceding fiscal years.

(7) The total dollar amount and percentage of subcontracts that the company awarded to all SDB and WOSB firms under DoD contracts and other Federal agency contracts during the 2 preceding fiscal years. (Show DoD subcontract awards separately.) If the company presently is required to submit a Standard Form (SF) 295, Summary Subcontract Report, the request must include copies of the final reports for the 2 preceding fiscal years.

(8) Information on the company's ability to provide developmental assistance to eligible protégés.

(c) A template of the mentor application is available at: *http://www.acq.osd.mil/sadbu/mentor_protege.*

(d) Companies that apply for participation and are not approved will be provided the reasons and an opportunity to submit additional information for reconsideration.

I–106 Development of mentor-protégé agreements.

(a) Prospective mentors and their protégés may choose to execute letters of intent prior to negotiation of mentor-protégé agreements.

(b) The agreements should be structured after completion of a preliminary assessment of the developmental needs of the protégé firm and mutual agreement regarding the developmental assistance to be provided to address those needs and enhance the protégé's ability to perform successfully under contracts or subcontracts.

(c) A mentor firm may not require a protégé firm to enter into a mentor-protégé agreement as a condition for award of a contract by the mentor firm, including a subcontract under a DoD contract awarded to the mentor firm.

(d) The mentor-protégé agreement may provide for the mentor firm to furnish any or all of the following types of developmental assistance:

(1) Assistance by mentor firm personnel in—

(i) General business management, including organizational management, financial management, and personnel management, marketing, business development, and overall business planning;

(ii) Engineering and technical matters such as production inventory control and quality assurance; and

(iii) Any other assistance designed to develop the capabilities of the protégé firm under the developmental program.

(2) Award of subcontracts under DoD contracts or other contracts on a noncompetitive basis.

(3) Payment of progress payments for the performance of subcontracts by a protégé firm in amounts as provided for in the subcontract; but in no event may any such progress payment exceed 100 percent of the costs incurred by the protégé firm for the performance of the subcontract. Provision of progress payments by a mentor firm to a protégé firm at a rate other than the customary rate for the firm must be implemented in accordance with FAR 32.504(c).

(4) Advance payments under such subcontracts. The mentor firm must administer advance payments in accordance with FAR Subpart 32.4.

(5) Loans.

(6) Investment(s) in the protégé firm in exchange for an ownership interest in the protégé firm, not to exceed 10 percent of the total ownership interest. Investments may include, but are not limited to, cash, stock, and contributions in kind.

(7) Assistance that the mentor firm obtains for the protégé firm from one or more of the following:

(i) Small Business Development Centers established pursuant to Section 21 of the Small Business Act (15 U.S.C. 648).

(ii) Entities providing procurement technical assistance pursuant to 10 U.S.C. Chapter 142 (Procurement Technical Assistance Centers).

(iii) Historically Black colleges and universities.

(iv) Minority institutions of higher education.

(e) Pursuant to FAR 31.109, approved mentor firms seeking either reimbursement or credit are strongly encouraged to enter into an advance agreement with the contracting officer responsible for determining final indirect cost rates under FAR 42.705. The purpose of the advance agreement is to establish the accounting treatment of the costs of the developmental assistance pursuant to the mentor-protégé agreement prior to the incurring of any costs by the mentor firm. An advance agreement is an attempt by both the Government and the mentor firm to avoid possible subsequent dispute based on questions related to reasonableness, allocability, or allowability of the costs of developmental assistance under the Program. Absent an advance agreement, mentor firms are advised to establish the accounting treatment of such costs and to address the need for any changes to their cost accounting practices that may result from the implementation of a mentor-protégé agreement, prior to incurring any costs, and irrespective of whether costs will be reimbursed or credited.

(f) Developmental assistance provided under an approved mentor-protégé agreement is distinct from, and must not duplicate, any effort that is the normal and expected product of the award and administration of the mentor firm's subcontracts. Costs associated with the latter must be accumulated and charged in accordance with the contractor's approved accounting practices; they are not considered developmental assistance costs eligible for either credit or reimbursement under the Program.

I–107 Elements of a mentor-protégé agreement.

Each mentor-protégé agreement will contain the following elements:

(a) The name, address, e-mail address, and telephone number of the mentor and protégé points of contact;

(b) The NAICS code(s) that represent the contemplated supplies or services to be provided by the protégé firm to the mentor firm and a statement that, at the time the agreement is submitted for approval, the protégé firm, if an SDB or WOSB concern, does not exceed the size standard for the appropriate NAICS code;

(c) A statement that the protégé firm is eligible to participate in accordance with I–102(b);

(d) A statement that the mentor is eligible to participate in accordance with I–102;

(e) A preliminary assessment of the developmental needs of the protégé firm;

(f) A developmental program for the protégé firm specifying the type of assistance the mentor will provide to the protégé and how that assistance will—

(1) Increase the protégé's ability to participate in DoD, Federal, and/or commercial contracts and subcontracts; and

(2) Increase small business subcontracting opportunities in industry categories where eligible protégés or other small business firms are not dominant in the company's vendor base;

(g) Factors to assess the protégé firm's developmental progress under the Program, including specific milestones for providing each element of the identified assistance;

(h) An estimate of the dollar value and type of subcontracts that the mentor firm will award to the protégé firm, and the period of time over which the subcontracts will be awarded;

(i) A statement from the protégé firm indicating its commitment to comply with the requirements for reporting and for review of the agreement during the duration of the agreement and for 2 years thereafter;

(j) A program participation term for the agreement that does not exceed 3 years. Requests for an extension of the agreement for a period not to exceed an additional 2 years are subject to the approval of the cognizant Component Director, SADBU. The justification must detail the unusual circumstances that warrant a term in excess of 3 years;

(k) Procedures for the mentor firm to notify the protégé firm in writing at least 30 days in advance of the mentor firm's intent to voluntarily withdraw its participation in the Program. A mentor firm may voluntarily terminate its mentor-protégé agreement(s) only if it no longer wants to be a participant in the Program as a mentor firm. Otherwise, a mentor firm must terminate a mentor-protégé agreement for cause;

(l) Procedures for the mentor firm to terminate the mentor-protégé agreement for cause which provide that—

(1) The mentor firm must furnish the protégé firm a written notice of the proposed termination, stating the specific reasons for such action, at least 30 days in advance of the effective date of such proposed termination;

(2) The protégé firm must have 30 days to respond to such notice of proposed termination, and may rebut any findings believed to be erroneous and offer a remedial program;

(3) Upon prompt consideration of the protégé firm's response, the mentor firm must either withdraw the notice of proposed termination and continue the protégé firm's participation, or issue the notice of termination; and

(4) The decision of the mentor firm regarding termination for cause, conforming with the requirements of this section, will be final and is not reviewable by DoD;

(m) Procedures for a protégé firm to notify the mentor firm in writing at least 30 days in advance of the protégé firm's intent to voluntarily terminate the mentor-protégé agreement;

(n) Additional terms and conditions as may be agreed upon by both parties; and

(o) Signatures and dates for both parties to the mentor-protégé agreement.

I–108 Submission and approval of mentor-protégé agreements.

(a) Upon solicitation or as determined by the cognizant DoD component, mentors will submit—

(1) A mentor application pursuant to I–105, if the mentor has not been previously approved to participate;

(2) A signed mentor-protégé agreement pursuant to I–107;

(3) A statement as to whether the mentor is seeking credit or reimbursement of costs incurred;

(4) The estimated cost of the technical assistance to be provided, broken out per year;

(5) A justification if program participation term is greater than 3 years (Term of agreements may not exceed 5 years); and

(6) For reimbursable agreements, a specific justification for developmental costs in excess of $1,000,000 per year.

(b) When seeking reimbursement of costs, cognizant DoD components may require additional information.

(c) The mentor-protégé agreement must be approved by the cognizant Component Director, SADBU, prior to incurring costs eligible for credit.

(d) The cognizant DoD component will execute a contract modification or a separate contract, if justified pursuant to I–103(b)(3), prior to the mentor's incurring costs eligible for reimbursement.

(e) Credit agreements that are not associated with an existing DoD program and/or component will be submitted for approval to Director, SADBU, Defense Contract Management Agency (DCMA), via the mentor's cognizant administrative contracting officer.

(f) A prospective mentor that has identified Program funds to be made available from a DoD program manager must provide the information in paragraph (a) of this section through the program manager to the cognizant Component Director, SADBU, with a letter signed by the program manager indicating the amount of funding that has been identified for the developmental assistance program.

I–109 Reimbursable agreements.

The following program provisions apply to all reimbursable mentor-protégé agreements:

(a) Assistance provided in the form of progress payments to a protégé firm in excess of the customary progress payment rate for the firm will be reimbursed only if implemented in accordance with FAR 32.504(c).

(b) Assistance provided in the form of advance payments will be reimbursed only if the payments have been provided to a protégé firm under subcontract terms and conditions similar to those in the clause at FAR 52.232–12, Advance Payments. Reimbursement of any advance payments will be made pursuant to the inclusion of the clause at DFARS 252.232–7005, Reimbursement of Subcontractor Advance Payments—DoD Pilot Mentor-Protégé Program, in appropriate contracts. In requesting reimbursement, the mentor firm agrees that the risk of any financial loss due to the failure or inability of a protégé firm to repay any unliquidated advance payments will be the sole responsibility of the mentor firm.

(c) The primary forms of developmental assistance authorized for reimbursement under the Program are identified in I–106(d). On a case-by-case basis, Component Directors, SADBU, at their discretion, may approve additional incidental expenses for reimbursement, provided these expenses do not exceed 10 percent of the total estimated cost of the agreement.

(d) The total amount reimbursed to a mentor firm for costs of assistance furnished to a protégé firm in a fiscal year may not exceed $1,000,000 unless the cognizant Component Director, SADBU, determines in writing that unusual circumstances justify reimbursement at a higher amount. Request for authority to reimburse in excess of $1,000,000 must detail the unusual circumstances and must be endorsed and submitted by the program manager to the cognizant Component Director, SADBU.

(e) Developmental assistance costs that are incurred pursuant to an approved reimbursable mentor-protégé agreement, and have been charged to, but not reimbursed through, a separate contract, or through a

separately priced contract line item added to a DoD contract, will not be otherwise reimbursed, as either a direct or indirect cost, under any other DoD contract, irrespective of whether the costs have been recognized for credit against applicable subcontracting goals.

I–110 Credit agreements.

I–110.1 Program provisions applicable to credit agreements.

(a) Developmental assistance costs incurred by a mentor firm for providing assistance to a protégé firm pursuant to an approved credit mentor-protégé agreement may be credited as if the costs were incurred under a subcontract award to that protégé, for the purpose of determining the performance of the mentor firm in attaining an applicable subcontracting goal established under any contract containing a subcontracting plan pursuant to the clause at FAR 52.219–9, Small Business Subcontracting Plan, or the provisions of the DoD Comprehensive Subcontracting Plan Test Program. Unreimbursed developmental assistance costs incurred for a protégé firm that is an eligible entity employing the severely disabled may be credited toward the mentor firm's small disadvantaged business subcontracting goal, even if the protégé firm is not a small disadvantaged business concern.

(b) Costs that have been reimbursed through inclusion in indirect expense pools may also be credited as subcontract awards for determining the performance of the mentor firm in attaining an applicable subcontracting goal established under any contract containing a subcontracting plan. However, costs that have not been reimbursed because they are not reasonable, allocable, or allowable will not be recognized for crediting purposes.

(c) Other costs that are not eligible for reimbursement pursuant to I–106(d) may be recognized for credit only if requested, identified, and incorporated in an approved mentor-protégé agreement.

(d) The amount of credit a mentor firm may receive for any such unreimbursed developmental assistance costs must be equal to—

(1) Four times the total amount of such costs attributable to assistance provided by small business development centers, historically Black colleges and universities, minority institutions, and procurement technical assistance centers.

(2) Three times the total amount of such costs attributable to assistance furnished by the mentor's employees.

(3) Two times the total amount of other such costs incurred by the mentor in carrying out the developmental assistance program.

I–110.2 Credit adjustments.

(a) Adjustments may be made to the amount of credit claimed if the Director, SADBU, OUSD(AT&L), determines that—

(1) A mentor firm's performance in the attainment of its subcontracting goals through actual subcontract awards declined from the prior fiscal year without justifiable cause; and

(2) Imposition of such a limitation on credit appears to be warranted to prevent abuse of this incentive for the mentor firm's participation in the Program.

(b) The mentor firm must be afforded the opportunity to explain the decline in small business subcontract awards before imposition of any such limitation on credit. In making the final decision to impose a limitation on credit, the Director, SADBU, OUSD(AT&L), must consider—

(1) The mentor firm's overall small business participation rates (in terms of percentages of subcontract awards and dollars awarded) as compared to the participation rates existing during the 2 fiscal years prior to the firm's admission to the Program;

(2) The mentor firm's aggregate prime contract awards during the prior 2 fiscal years and the total amount of subcontract awards under such contracts; and

(3) Such other information the mentor firm may wish to submit.

(c) The decision of the Director, SADBU, OUSD(AT&L), regarding the imposition of a limitation on credit will be final.

I–111 Agreement terminations.

(a) Mentors and/or protégés must send a copy of any termination notices to the cognizant Component Director, SADBU, that approved the agreement, and the DCMA administrative contracting officer responsible for conducting the annual review pursuant to I–113.

(b) For reimbursable agreements, mentors must also send copies of any termination to the program manager and to the contracting officer.

(c) Termination of a mentor-protégé agreement will not impair the obligations of the mentor firm to perform pursuant to its contractual obligations under Government contracts and subcontracts.

(d) Termination of all or part of the mentor-protégé agreement will not impair the obligations of the protégé firm to perform pursuant to its contractual obligations under any contract awarded to the protégé firm by the mentor firm.

(e) Mentors and protégés will follow provisions of the mentor-protégé agreement developed in compliance with I–107(k) through (m).

I–112 Reporting requirements.

I–112.1 Reporting requirements applicable to SF294/SF295 reports.

(a) Amounts credited toward applicable subcontracting goal(s) for unreimbursed costs under the Program must be separately identified on the appropriate SF294/SF295 reports from the amounts credited toward the goal(s) resulting from the award of actual subcontracts to protégé firms. The combination of the two must equal the mentor firm's overall accomplishment toward the applicable goal(s).

(b) A mentor firm may receive credit toward the attainment of an SDB subcontracting goal for each subcontract awarded by the mentor firm to an entity that qualifies as a protégé firm pursuant to I–101.3 or I–101.5.

(c) For purposes of calculating any incentives to be paid to a mentor firm for exceeding an SDB subcontracting goal pursuant to the clause at FAR 52.219–26, Small Disadvantaged Business Participation Program—Incentive Subcontracting, incentives will be paid only if an SDB subcontracting goal has been exceeded as a result of actual subcontract awards to SDBs (*i.e.*, excluding credit).

I–112.2 Program specific reporting requirements.

(a) Mentors must report on the progress made under active mentor-protégé agreements semiannually for the periods ending March 31st and September 30th throughout the Program participation term of the agreement. The September 30th report must address the entire fiscal year.

(b) Reports are due 30 days after the close of each reporting period.

(c) Each report must include the following data on performance under the mentor-protégé agreement:

(1) Dollars obligated (for reimbursable agreements).

(2) Expenditures.

(3) Dollars credited, if any, toward applicable subcontracting goals as a result of developmental assistance provided to the protégé and a copy of the SF294 and/or SF295 for each contract where developmental assistance was credited.

(4) The number and dollar value of subcontracts awarded to the protégé firm.

(5) Description of developmental assistance provided, including milestones achieved.

(6) Impact of the agreement in terms of capabilities enhanced, certifications received, and/or technology transferred.

(d) A recommended reporting format and guidance for its submission are available at: *http://www.acq.osd.mil/sadbu/mentor_protege*.

(e) The protégé must provide data, annually by October 31st, on the progress made during the prior fiscal year by the protégé in employment, revenues, and participation in DoD contracts during—

(1) Each fiscal year of the Program participation term; and

(2) Each of the 2 fiscal years following the expiration of the Program participation term.

(f) The protégé report required by paragraph (e) of this section may be provided as part of the mentor report for the period ending September 30th required by paragraph (a) of this section.

(g) Progress reports must be submitted—

(1) For credit agreements, to the cognizant Component Director, SADBU, that approved the agreement, and the mentor's cognizant DCMA administrative contracting officer; and

(2) For reimbursable agreements, to the cognizant Component Director, SADBU, the contracting officer, the DCMA administrative contracting officer, and the program manager.

I–113 Performance reviews.

(a) DCMA will conduct annual performance reviews of the progress and accomplishments realized under approved mentor-protégé agreements. These reviews must verify data provided on the semiannual reports and must provide information as to—

(1) Whether all costs reimbursed to the mentor firm under the agreement were reasonably incurred to furnish assistance to the protégé in accordance with the mentor-protégé agreement and applicable regulations and procedures; and

(2) Whether the mentor and protégé accurately reported progress made by the protégé in employment, revenues, and participation in DoD contracts during the Program participation term and for 2 fiscal years following the expiration of the Program participation term.

(b) A checklist for annual performance reviews is available at *http://www.acq.osd.mil/sadbu/mentor_protege.*

[FR Doc. 04–27351 Filed 12–14–04; 8:45 am]

BILLING CODE 5001–08–P

DEPARTMENT OF DEFENSE

48 CFR Part 236

[DFARS Case 2003–D035]

Defense Federal Acquisition Regulation Supplement; Construction and Architect-Engineer Services

AGENCY: Department of Defense (DoD).

ACTION: Final rule.

SUMMARY: DoD has issued a final rule amending the Defense Federal Acquisition Regulation Supplement (DFARS) to update text pertaining to selection of firms for architect-engineer contracts. This rule is a result of a transformation initiative undertaken by DoD to dramatically change the purpose and content of the DFARS.

EFFECTIVE DATE: December 15, 2004.

FOR FURTHER INFORMATION CONTACT: Mr. Euclides Barrera, Defense Acquisition Regulations Council, OUSD(AT&L)DPAP(DAR), IMD 3C132, 3062 Defense Pentagon, Washington, DC 20301–3062. Telephone (703) 602–0296; facsimile (703) 602–0350. Please cite DFARS Case 2003–D035.

SUPPLEMENTARY INFORMATION:

A. Background

DFARS Transformation is a major DoD initiative to dramatically change the purpose and content of the DFARS. The objective is to improve the efficiency and effectiveness of the acquisition process, while allowing the acquisition workforce the flexibility to innovate. The transformed DFARS will contain only requirements of law, DoD-wide policies, delegations of FAR authorities, deviations from FAR requirements, and policies/procedures that have a significant effect beyond the internal operating procedures of DoD or a significant cost or administrative impact on contractors or offerors. Additional information on the DFARS Transformation initiative is available at *http://www.acq.osd.mil/dp/dars/transf.htm.*

This final rule is a result of the DFARS Transformation initiative. The changes in this rule—

- Revise DFARS 236.602–1 to remove procedures for establishment of evaluation criteria in the selection of firms for architect-engineer contracts. This text has been relocated to the new DFARS companion resource, Procedures, Guidance, and Information (PGI), available at *http://www.acq.osd.mil/dpap/dars/pgi.*
- Remove unnecessary text on preselection boards and selection authorities at DFARS 236.602–2 and 236.602–4.
- Amend DFARS 236.604 to reflect replacement of Standard Form 254, Architect—Engineer and Related Services Questionnaire, with Standard Form 330, Architect-Engineer Qualifications.

DoD published a proposed rule at 69 FR 35568 on June 25, 2004. DoD received no comments on the proposed rule. Therefore, DoD has adopted the proposed rule as a final rule without change.

This rule was not subject to Office of Management and Budget review under Executive Order 12866, dated September 30, 1993.

B. Regulatory Flexibility Act

DoD certifies that this final rule will not have a significant economic impact on a substantial number of small entities within the meaning of the Regulatory Flexibility Act, 5 U.S.C. 601, *et seq.*, because the changes in the rule represent no substantive change to policy with regard to selection of firms for architect-engineer contracts.

C. Paperwork Reduction Act

The Paperwork Reduction Act does not apply because the rule does not impose any information collection requirements that require the approval of the Office of Management and Budget under 44 U.S.C. 3501, *et seq.*

List of Subjects in 48 CFR Part 236

Government procurement.

Michele P. Peterson,

Executive Editor, Defense Acquisition Regulations Council.

■ Therefore, 48 CFR Part 236 is amended as follows:

■ 1. The authority citation for 48 CFR Part 236 continues to read as follows:

Authority: 41 U.S.C. 421 and 48 CFR Chapter 1.

PART 236—CONSTRUCTION AND ARCHITECT-ENGINEER CONTRACTS

■ 2. Section 236.602–1 is revised to read as follows:

236.602–1 Selection criteria.

(a) Establish the evaluation criteria before making the public announcement required by FAR 5.205(c) and include the criteria and their relative order of importance in the announcement. Follow the procedures at PGI 236.602–1(a).

236.602–2 and 236.602–4 [Removed]

■ 3. Sections 236.602–2 and 236.602–4 are removed.

■ 4. Section 236.604 is amended by revising paragraph (c)(ii) to read as follows:

236.604 Performance evaluation.

* * * * *

(c) * * *

(ii) File and use the DD Form 2631, Performance Evaluation (Architect-Engineer), in a manner similar to the SF 330, Architect-Engineer Qualifications, Part II.

[FR Doc. 04–27350 Filed 12–14–04; 8:45 am]

BILLING CODE 5001–08–P

DEPARTMENT OF DEFENSE

48 CFR Part 237

[DFARS Case 2003–D107]

Defense Federal Acquisition Regulation Supplement; Firefighting Services Contracts

AGENCY: Department of Defense (DoD).

ACTION: Final rule.

SUMMARY: DoD has adopted as final, without change, an interim rule amending the Defense Federal Acquisition Regulation Supplement (DFARS) to implement Section 331 of the National Defense Authorization Act for Fiscal Year 2004. Section 331 provides authority for contractor performance of firefighting functions at military installations or facilities for periods of one year or less, if the functions would otherwise have to be performed by members of the armed forces who are not readily available due to a deployment.

EFFECTIVE DATE: December 15, 2004.

FOR FURTHER INFORMATION CONTACT: Ms. Robin Schulze, Defense Acquisition Regulations Council, OUSD (AT&L) DPAP (DAR), IMD 3C132, 3062 Defense Pentagon, Washington, DC 20301–3062. Telephone (703) 602–0326; facsimile (703) 602–0350. Please cite DFARS Case 2003–D107.

SUPPLEMENTARY INFORMATION:

A. Background

DoD published an interim DFARS rule at 69 FR 35532 on June 25, 2004, to implement Section 331 of the National Defense Authorization Act for Fiscal Year 2004 (Pub. L. 108–136). Section 331 amended 10 U.S.C. 2465 to permit the award of contracts for firefighting functions at military installations or facilities, for periods of one year or less, if the functions would otherwise have to be performed by members of the armed forces who are not readily available by reason of a deployment. DoD received no comments on the interim rule. Therefore, DoD has adopted the interim rule as a final rule without change.

This rule was not subject to Office of Management and Budget review under Executive Order 12866, dated September 30, 1993.

B. Regulatory Flexibility Act

DoD certifies that this final rule will not have a significant economic impact on a substantial number of small entities within the meaning of the Regulatory Flexibility Act, 5 U.S.C. 601, *et seq.*, because application of the rule is limited to firefighting functions at military installations or facilities for periods of one year or less, when members of the armed forces are not readily available to perform the functions due to a deployment.

C. Paperwork Reduction Act

The Paperwork Reduction Act does not apply, because the rule does not impose any information collection requirements that require the approval of the Office of Management and Budget under 44 U.S.C. 3501, *et seq.*

List of Subjects in 48 CFR Part 237

Government procurement.

Michele P. Peterson,

Executive Editor, Defense Acquisition Regulations Council.

Interim Rule Adopted as Final Without Change

■ Accordingly, the interim rule amending 48 CFR Part 237, which was published at 69 FR 35532 on June 25, 2004, is adopted as a final rule without change.

[FR Doc. 04–27347 Filed 12–14–04; 8:45 am]

BILLING CODE 5001–08–P

DEPARTMENT OF ENERGY

48 CFR Parts 909 and 970

RIN 1991–AB64

Acquisition Regulation: Work for Others

AGENCY: Department of Energy.

ACTION: Interim final rule with request for comment.

SUMMARY: The Department of Energy (DOE) is amending the Department of Energy Acquisition Regulation (DEAR) to provide policy and procedures regarding work for non-DOE entities performed by DOE contractors who manage and operate DOE-owned or -leased facilities. The regulation is also being revised to make an administrative change concerning debarment and suspension officials. The contractor requirements previously found in DOE Order 481.1B, ''Work for Others (Non-Department of Energy Funded Work),'' are being relocated to the DEAR to ensure that authorization to perform non-DOE funded work is provided by DOE in a consistent and uniform manner. No other change in the DOE's Work for Others policy is being made.

DATES: Effective Date: January 14, 2005.

Comment Date: Interested persons may submit comments on this interim final rule by January 14, 2005.

ADDRESSES: This rule is available and comments may be submitted on line at *http://www.regulations.gov*. Comments may be submitted electronically to *richard.langston@hq.doe.gov*. Comments may be mailed to Richard Langston, Mail Code ME–61, U.S. Department of Energy, 1000 Independence Avenue, SW., Washington, DC 20585 or phone (202) 287–1339.

FOR FURTHER INFORMATION CONTACT: Andrew Geary, U.S. Department of Energy, Office of Procurement and Assistance Management, ME–62, 1000 Independence Avenue, SW., Washington, DC 20585 at (202) 287–1507 or electronically at *andrew.geary@hq.doe.gov*.

SUPPLEMENTARY INFORMATION:

I. Background.
II. Section-by-Section Analysis.
III. Procedural Requirements.
A. Review Under Executive Order 12866.
B. Review Under Executive Order 12988.
C. Review Under the Regulatory Flexibility Act.
D. Review Under the Paperwork Reduction Act.
E. Review Under the National Environmental Policy Act.
F. Review Under Executive Order 13132.
G. Review Under the Unfunded Mandates Reform Act of 1995.
H. Review Under the Treasury and General Government Appropriations Act, 1999.
I. Review Under the Small Business Regulatory Enforcement Fairness Act of 1996.
J. Review Under Executive Order 13211.
K. Review Under the Treasury and General Government Appropriations Act, 2001.
L. Approval by the Office of the Secretary of Energy.

I. Background

DOE, including the National Nuclear Security Administration (NNSA), owns or sponsors major scientific research and development, and manufacturing facilities throughout the United States that are managed and operated by contractors. DOE permits these contractors to perform non-DOE work for other Federal agencies and non-Federal entities on a fully reimbursable basis when such work is authorized by law and the work requires DOE's unique technologies and capabilities.

Performance of this work is conducted under DOE's Work for Others Program. The Work for Others Program makes available for use special or unique services or facilities that are otherwise unavailable in the private sector. The Work for Others Program requires that funding for Work for Others projects be provided by a non-DOE sponsor. Performance of this work has allowed DOE and its management and operating contractors to assist other Federal agencies in accomplishing their missions and has provided assistance to non-Federal entities to solve complex and challenging technological issues.

DOE allows such work to be conducted by contractors provided that:

(1) DOE's laboratories and facilities do not compete directly with the domestic private sector;

(2) The acceptance and performance of work complies with applicable statutes and regulations;

(3) Work is fully funded by the non-DOE entity requesting work to be performed; and,

(4) The work to be performed is consistent with or complimentary to DOE missions and the missions of the facility where the work will be performed.

The purpose of this rule is to establish a uniform contract clause that will provide authority to DOE's management and operating contractors to perform fully reimbursable work under the terms and conditions set forth in their contracts.

This rule amends Part 970 of the DEAR which governs DOE contracts with entities that manage and operate DOE-owned or -leased facilities. The rule applies to contracts when the contractor performs fully reimbursable

work for other Federal agencies and non-Federal entities and does not relate to the expenditure of DOE's appropriated funds. Neither 5 U.S.C. 553 nor 41 U.S.C. 418b require publication of a notice of proposed rulemaking prior to the publication of today's final rule. Nevertheless, comments on today's rule will be accepted. DOE will consider all comments and, if appropriate, may modify the rule.

DOE is also making a technical amendment to 48 CFR Part 909 to identify an NNSA official as the debarment and suspension official for NNSA contracts.

II. Section-by-Section Analysis

DOE is amending the DEAR as follows:

1. Section 909.403 is being amended to identify a separate debarment and suspension official for contracts awarded by the NNSA.

2. Section 970.1707 is being added to provide information regarding DOE's Work for Others Program including:

(i) A general definition of the program and its activities;

(ii) The purpose for the program;

(iii) Specified requirements that must be satisfied prior to the acceptance and performance of work for others activities; and,

(iv) An instruction directing use of a uniform clause.

3. A standard contract clause is added at 970.5217–1 for use in DOE contracts to authorize the performance of work for non-DOE entities by DOE management and operating contractors and to establish specific conditions under which this work can be approved and performed. These conditions include ensuring that:

(i) DOE's laboratories and facilities do not compete directly with the domestic private sector;

(ii) The acceptance and performance of work complies with applicable statutes and regulations;

(iii) Work is fully funded by the non-DOE entity requesting work to be performed; and,

(iv) The work to be performed is consistent with or complimentary to DOE missions and the missions of the facility where the work will be performed.

III. Procedural Requirements

A. Review Under Executive Order 12866

This regulatory action has been determined not to be a significant regulatory action under Executive Order 12866, Regulatory Planning and Review (58 FR 51735, October 4, 1993). Accordingly, this rule is not subject to review under the Executive Order by the Office of Information and Regulatory Affairs (OIRA) within the Office of Management and Budget (OMB).

B. Review Under Executive Order 12988

With respect to the review of existing regulations and the promulgation of new regulations, section 3(a) of Executive Order 12988, Civil Justice Reform, 61 FR 4729 (February 7, 1996), imposes on Executive agencies the general duty to adhere to the following requirements: (1) Eliminate drafting errors and ambiguity; (2) write regulations to minimize litigation; and (3) provide a clear legal standard for affected conduct rather than a general standard and promote simplification and burden reduction. With regard to the review required by section 3(a), section 3(b) of Executive Order 12988 specifically requires that Executive agencies make every reasonable effort to ensure that the regulation: (1) Clearly specifies the preemptive effect, if any; (2) clearly specifies any effect on existing Federal law or regulation; (3) provides a clear legal standard for affected conduct while promoting simplification and burden reduction; (4) specifies the retroactive effect, if any; (5) adequately defines key terms; and (6) addresses other important issues affecting clarity and general draftsmanship under any guidelines issued by the Attorney General. Section 3(c) of Executive Order 12988 requires Executive agencies to review regulations in light of applicable standards in section 3(a) and section 3(b) to determine whether they are met or it is unreasonable to meet one or more of them. DOE has completed the required review and determined that, to the extent permitted by law, these regulations meet the relevant standards of Executive Order 12988.

C. Review Under the Regulatory Flexibility Act

This rule has been reviewed under the Regulatory Flexibility Act, 5 U.S.C. 601 *et seq.*, that requires preparation of an initial regulatory flexibility analysis for any rule that by law must be proposed for public comment and that is likely to have significant economic impact on a substantial number of small entities. Neither 5 U.S.C. 553 nor 41 U.S.C. 418b requires that today's interim final rule be proposed for public comment. Accordingly, no regulatory flexibility analysis has been prepared for this rulemaking.

D. Review Under Paperwork Reduction Act

Section 970.5217–1(g) of this rule will require contractors performing work for others to submit an annual report concerning such work. That reporting requirement is subject to review and approval of the OMB pursuant to the Paperwork Reduction Act, 44 U.S.C. 3105 *et seq.* As provided in OMB's regulations implementing the Act, DOE published a separate notice in the **Federal Register**, on February 27, 2004, 69 FR 6910, inviting public comment on the collection of information, after which it would submit the collection of information to OMB for approval pursuant to 5 CFR 1320.10. The public comment period for that notice closed April 27, 2004, and no comments were received. OMB granted approval for this information collection and assigned it a clearance number of 1910–5125.

E. Review Under the National Environmental Policy Act

Pursuant to the Council on Environmental Quality Regulations (40 CFR Parts 1500–1508), DOE has established regulations for its compliance with the National Environmental Policy Act of 1969 (42 U.S.C. 4321 *et seq.*). Pursuant to Appendix A of Subpart D of 10 CFR Part 1021, DOE has determined that today's regulatory action is strictly procedural (Categorical Exclusion A–6). Accordingly, neither an environmental impact statement nor an environmental assessment is required.

F. Review Under Executive Order 13132

Executive Order 13132 (64 FR 43255, August 4, 1999) imposes certain requirements on agencies formulating and implementing policies or regulations that preempt State law or that have federalism implications. Agencies are required to examine the constitutional and statutory authority supporting any action that would limit the policymaking discretion of the States and carefully assess the necessity for such actions. DOE has examined today's rule and has determined that it does not preempt State law and does not have a substantial direct effect on the States, on the relationship between the National Government and the States, or on the distribution of power and responsibilities among the various levels of government. No further action is required by Executive Order 13132.

G. Review Under the Unfunded Mandates Reform Act of 1995

The Unfunded Mandates Reform Act of 1995 (Pub. L. 104–4) requires a Federal agency to perform a detailed

assessment of costs and benefits of any rule imposing a Federal Mandate with costs to State, local or tribal governments, or to the private sector, of $100 million or more in any single year. This rulemaking does not impose a Federal mandate on State, local or tribal governments or on the private sector.

H. Review Under the Treasury and General Government Appropriations Act, 1999

Section 654 of the Treasury and General Government Appropriations Act, 1999 (Pub. L. 105–277), requires Federal agencies to issue a Family Policymaking Assessment for any rule or policy that may affect family well-being. This rule will have no impact on family well being.

I. Review Under the Small Business Regulatory Enforcement Fairness Act of 1996

As required by 5 U.S.C. 801, DOE will report to Congress promulgation of this rule prior to its effective date. The report will state that it has been determined that the rule is not a ''major rule'' as defined by 5 U.S.C. 804(3).

J. Review Under Executive Order 13211

Executive Order 13211, Actions Concerning Regulations That Significantly Affect Energy Supply, Distribution, or Use (66 FR 28355, May 22, 2001), requires Federal agencies to prepare and submit to the OIRA a Statement of Energy Effects for any significant energy action. A ''significant energy action'' is defined as any action by an agency that promulgates or is expected to lead to promulgation of a final rule, and that: (1) Is a significant regulatory action under Executive Order 12866, or any successor order; and (2) is likely to have a significant adverse effect on the supply, distribution, or use of energy, or (3) is designated by the Administrator of OIRA as a significant energy action. For any significant energy action, the agency must give a detailed statement of any adverse effects on energy supply, distribution, or use should the proposal be implemented, and of reasonable alternatives to the action and their expected benefits on energy supply, distribution, and use.

Today's rule is not a significant energy action. Accordingly, DOE has not prepared a Statement of Energy Effects.

K. Review Under the Treasury and General Government Appropriations Act, 2001

The Treasury and General Government Appropriations Act, 2001, 44 U.S.C. 3516, note, provides for agencies to review most disseminations of information to the public under implementing guidelines established by each agency pursuant to general guidelines issued by OMB. OMB's guidelines were published at 67 FR 8452 (February 22, 2002), and DOE's guidelines were published at 67 FR 62446 (October 7, 2002). DOE has reviewed today's notice under the OMB and DOE guidelines and has concluded that it is consistent with applicable policies in those guidelines.

L. Approval by the Office of the Secretary of Energy

The Office of the Secretary of Energy has approved issuance of this interim final rule.

List of Subjects in 48 CFR Parts 909 and 970

Government procurement.

Issued in Washington, DC, on December 8, 2004.

Richard H. Hopf,

Director, Office of Procurement and Assistance Management, Office of Management, Budget and Evaluation/Chief Financial Officer, Department of Energy.

Robert C. Braden, Jr.,

Director, Office of Acquisition and Supply Management, National Nuclear Security Administration.

■ For the reasons set forth in the preamble, Chapter 9 of Title 48 of the Code of Federal Regulations is amended as set forth below:

PART 909—CONTRACTOR QUALIFICATIONS

■ 1. The authority citation for part 909 continues to read as follows:

Authority: 42 U.S.C. 7101 *et seq.*; 41 U.S.C. 418b; 50 U.S.C. 2401 *et seq.*

■ 2. Section 909.403 is revised to read as follows:

909.403 Definitions.

In addition to the definitions set forth at FAR 9.403, the following definitions apply to this subpart:

Debarring Official. The Debarring Official for DOE contracts is the Director, Office of Procurement and Assistance Management, DOE, or designee. The Debarring Official for NNSA contracts is the Director, Office of Acquisition and Supply Management, NNSA, or designee.

Suspending Official. The Suspending Official for DOE contracts is the Director, Office of Procurement and Assistance Management, DOE, or designee. The Suspending Official for NNSA contracts is the Director, Office of Acquisition and Supply Management, NNSA, or designee.

PART 970—DOE MANAGEMENT AND OPERATING CONTRACTS

■ 3. The authority citation for part 970 continues to read as follows:

Authority: 42 U.S.C. 2201, 2282a, 2282b, 2282c; 42 U.S.C. 7101 *et seq.*; 41 U.S.C. 418b; 50 U.S.C. 2401 *et seq.*

■ 4. Subpart 970.17 is amended by adding sections 970.1707 through 970.1707–4 to read as follows:

Subpart 970.17—Special Contracting Methods

970.1707 Work for others.

970.1707–1 Scope.

Pursuant to Section 33 of the Atomic Energy Act of 1954, as amended (42 U.S.C. 2053), DOE is authorized to make its facilities available to other Federal and non-Federal entities (sponsors) for the conduct of certain research and development and training activities. Pursuant to the Economy Act of 1932, as amended (31 U.S.C. 1535), or other applicable authority, other Federal entities may request DOE to conduct work. DOE has implemented these and other statutory authorities and requirements in its Work for Others Program. DOE's internal procedures governing the Work for Others Program are described in DOE Order 481.1C, WORK FOR OTHERS (NON-DEPARTMENT OF ENERGY FUNDED WORK).

970.1707–2 Purpose.

The purpose of DOE's Work for Others Program is to:

(a) Provide access for non-DOE entities to highly specialized or unique DOE facilities, services, or technical expertise, when private facilities are inadequate;

(b) Increase research and development interactions among DOE's management and operating contractors and industry in order to transfer DOE technologies to industry for further development or commercialization;

(c) Maintain facility core competencies;

(d) Enhance the science and technology capabilities at DOE facilities; and,

(e) Provide assistance to other Federal agencies and non-Federal entities in accomplishing goals that may otherwise be unattainable and to avoid the possible duplication of effort at Federal facilities.

970.1707–3 Terms governing work for others.

(a) DOE's internal review and approval procedural requirements for

individual work for others agreements are set forth in DOE Order 481.1C (as supplemented by DOE Manual 481.1–1A for agreements with non-Federal entities), which may be amended from time to time, and such other guidance as may be issued by DOE. Contracting officers must ensure that the contractor's procedures for its operations are consistent with DOE's procedural requirements.

(b) A contractor may perform work for other Federal or non-Federal sponsors only if:

(1) The contractor is authorized by contract clause to perform such work;

(2) The work is not directly funded by DOE appropriations and is fully reimbursed by the sponsor;

(3) The DOE Contracting Officer or authorized designee approves the work in advance; and,

(4) The work is performed in accordance with DOE policies, procedures and directives applicable to the contract.

(c) Contracting officers must ensure that the requesting Federal entity certifies that:

(1) The interagency agreement with DOE complies with the Economy Act of 1932 (31 U.S.C. 1535) and other applicable statutory authorities and 48 CFR 6.002, which prohibits the use of an Interagency Agreement for the purpose of avoiding the competition requirements of the Federal Acquisition Regulation; and,

(2) The work to be performed will not place the DOE contractor in direct competition with the domestic private sector.

970.1707–4 Contract clause.

Insert the clause at 970.5217–1, Work for Others Program (Non-DOE Funded Work), in any contract that may involve work under the Work for Others Program, pursuant to 970.1707–3(b).

■ 5. Subpart 970.52 is amended by adding section 970.5217–1 to read as follows:

970.5217–1 Work for Others Program.

As prescribed in 48 CFR (DEAR) 970.1707–4 insert the following clause:

WORK FOR OTHERS PROGRAM (NON-DOE FUNDED WORK) (JAN 2005)

(a) *Authority to Perform Work for Others.* Pursuant to the Economy Act of 1932, as amended (31 U.S.C. 1535), and the Atomic Energy Act of 1954, as amended (42 U.S.C. 2011 *et seq.*) or other applicable authority, the Contractor may perform work for non-DOE entities (sponsors) on a fully reimbursable basis in accordance with this clause.

(b) *Contractor's Implementation.* The Contractor must draft, implement, and maintain formal policies, practices, and procedures in accordance with this clause, which must be submitted to the Contracting Officer for review and approval.

(c) *Conditions of Participation in Work for Others Program.* The Contractor:

(1) Must not perform Work for Others activities that would place it in direct competition with the domestic private sector;

(2) Must not respond to a request for proposals or any other solicitation from another Federal agency or non-Federal organization that involves direct comparative competition, either as an offeror, team member, or subcontractor to an offeror; however, the Contractor may, following notification to the Contracting Officer, respond to Broad Agency Announcements, Financial Assistance solicitations, and similar solicitations from another Federal Agency or non-Federal organizations when the selection is based on merit or peer review, the work involves basic or applied research to further advance scientific knowledge or understanding, and a response does not result in direct, comparative competition;

(3) Must not commence work on any Work for Others activity until a Work for Others proposal package has been approved by the DOE Contracting Officer or designated representative;

(4) Must not incur project costs until receipt of DOE notification that a budgetary resource is available for the project, except as provided in 48 CFR 970.5232–6;

(5) Must ensure that all costs associated with the performance of the work, including specifically all DOE direct costs and applicable surcharges, are included in any Work for Others proposal;

(6) Must maintain records for the accumulation of costs and the billing of such work to ensure that DOE's appropriated funds are not used in support of Work for Others activities and to provide an accounting of the expenditures to DOE and the sponsor upon request;

(7) Must perform all Work for Others projects in accordance with the standards, policies, and procedures that apply to performance under this contract, including but not limited to environmental, safety and health, security, safeguards and classification procedures, and human and animal research regulations;

(8) May subcontract portion(s) of a Work for Others project; however, the Contractor must select the subcontractor and the work to be subcontracted. Any subcontracted work must be in direct support of the DOE contractor's performance as defined in the DOE approved work for others proposal package; and,

(9) Must maintain a summary listing of project information for each active Work for Others project, consisting of:

(i) Sponsoring agency;

(ii) Total estimated costs;

(iii) Project title and description;

(iv) Project point of contact; and,

(v) Estimated start and completion dates.

(d) *Negotiation and Execution of Work for Others Agreement.* (1) When delegated authority by the Contracting Officer, the Contractor may negotiate the terms and conditions that will govern the performance of a specific Work for Others project. Such terms and conditions must be consistent with the terms, conditions, and requirements of the Contractor's contract with DOE. The Contractor may use DOE-approved contract terms and conditions as delineated in DOE Manual 481.1–1A or terms and conditions previously approved by the responsible Contracting Officer or authorized designee for agreements with non-Federal entities. The Contractor must not hold itself out as representing DOE when negotiating the proposed Work for Others agreement.

(2) The Contractor must submit all Work for Others agreements to the DOE Contracting Officer for DOE review and approval. The Contractor may not execute any proposed agreement until it has received notice of DOE approval.

(e) *Preparation of Project Proposals.* When the Contractor proposes to perform Work for Others activities pursuant to this clause, it may assist the project sponsor in the preparation of project proposal packages including the preparation of cost estimates.

(f) *Work for Others Appraisals.* DOE may conduct periodic appraisals of the Contractor's compliance with its Work for Others Program policies, practices and procedures. The Contractor must provide facilities and other support in conjunction with such appraisals as directed by the Contracting Officer or authorized designee.

(g) *Annual Work for Others Report.* The Contractor must provide assistance as required by the Contracting Officer or authorized designee in the preparation of a DOE Annual Summary Report of Work for Others Activities under the contract.

[FR Doc. 04–27418 Filed 12–14–04; 8:45 am]

BILLING CODE 6450–01–P

DEPARTMENT OF COMMERCE

National Oceanic and Atmospheric Administration

50 CFR Part 679

Docket No. 031124287–4060–02; I.D. 120904A]

Fisheries of the Exclusive Economic Zone Off Alaska; Pacific Cod by Catcher Vessels 60 feet (18.3 m) Length Overall and Longer Using Hook-and-line Gear in the Bering Sea and Aleutian Islands

AGENCY: National Marine Fisheries Service (NMFS), National Oceanic and Atmospheric Administration (NOAA), Commerce.

ACTION: Closure.

SUMMARY: NMFS is prohibiting directed fishing for Pacific cod by catcher vessels 60 feet (18.3 m) length overall (LOA) and longer using hook-and-line gear in the Bering Sea and Aleutian Islands management area (BSAI). This action is

necessary to prevent exceeding the 2004 total allowable catch (TAC) of Pacific cod allocated for catcher vessels 60 feet (18.3 m) LOA and longer using hook-and-line gear in this area.

DATES: Effective 1200 hrs, Alaska local time (A.l.t.), December 10, 2004, until 2400 hrs, A.l.t., December 31, 2004.

FOR FURTHER INFORMATION CONTACT: Josh Keaton, 907–586–7228.

SUPPLEMENTARY INFORMATION: NMFS manages the groundfish fishery in the BSAI according to the Fishery Management Plan for Groundfish of the Bering Sea and Aleutian Islands Management Area (FMP) prepared by the North Pacific Fishery Management Council under authority of the Magnuson-Stevens Fishery Conservation and Management Act. Regulations governing fishing by U.S. vessels in accordance with the FMP appear at subpart H of 50 CFR part 600 and 50 CFR part 679.

The 2004 final harvest specification for groundfish of the BSAI (69 FR 9242, February 27, 2004), allocated a directed fishing allowance for Pacific cod of 303 metric tons to catcher vessels 60 feet (18.3 m) LOA and longer using hook-and-line gear in the BSAI. See § 679.20(c)(3)(iii), § 679.20(c)(5), and § 679.20(a)(7)(i)(A) and (C).

In accordance with § 679.20(d)(1)(iii), the Administrator, Alaska Region, NMFS , has determined that the 2004 Pacific cod TAC allocated as a directed fishing allowance to catcher vessels 60 feet (18.3 m) LOA and longer using hook-and-line gear in the BSAI will soon be reached. Consequently, NMFS is prohibiting directed fishing for Pacific cod by catcher vessels 60 feet (18.3 m) LOA and longer using hook-and-line gear in the BSAI.

Classification

This action responds to the best available information recently obtained from the fishery. The Assistant Administrator for Fisheries, NOAA, (AA), finds good cause to waive the requirement to provide prior notice and opportunity for public comment pursuant to the authority set forth at 5 U.S.C. 553(b)(B) as such requirement is impracticable and contrary to the public interest. This requirement is impracticable and contrary to the public interest as it would prevent NMFS from responding to the most recent fisheries data in a timely fashion and would delay the closure of Pacific cod specified for catcher vessels 60 feet LOA and longer using hook-and-line gear in the BSAI.

The AA also finds good cause to waive the 30–day delay in the effective date of this action under 5 U.S.C. 553(d)(3). This finding is based upon the reasons provided above for waiver of prior notice and opportunity for public comment.

This action is required by § 679.20 and is exempt from review under Executive Order 12866.

Authority: Authority: 16 U.S.C. 1801 *et seq.*

Dated: December 10, 2004.

Alan D. Risenhoover,

Acting Director, Office of Sustainable Fisheries, National Marine Fisheries Service.

[FR Doc. 04–27429 Filed 12–10–04; 3:10 pm]

BILLING CODE 3510–22–S

DEPARTMENT OF COMMERCE

National Oceanic and Atmospheric Administration

50 CFR Part 679

[Docket No. 031124287–4060–02; I.D. 120904D]

Fisheries of the Exclusive Economic Zone Off Alaska; Groundfish of the Bering Sea and Aleutian Islands Management Area

AGENCY: National Marine Fisheries Service (NMFS), National Oceanic and Atmospheric Administration (NOAA), Commerce.

ACTION: Apportionment of reserve; request for comments.

SUMMARY: NMFS apportions amounts of the non-specified reserve of groundfish to certain target species in the Bering Sea and Aleutian Islands management area (BSAI). This action is necessary to account for previous harvest of the total allowable catch (TAC). It is intended to promote the goals and objectives of the fishery management plan for groundfish of the BSAI.

DATES: Effective December 15, 2004. Written comments must be received no later than 4:30 p.m., Alaska local time, December 29, 2004.

ADDRESSES: Send comments to Sue Salveson, Assistant Regional Administrator, Sustainable Fisheries Division, Alaska Region, NMFS, Attn: Lori Durall. Comments may be submitted by:

- Mail to: P.O. Box 21668, Juneau, AK 99802;
- Hand delivery to the Federal Building, 709 West 9th Street, Room 420A, Juneau, Alaska;
- FAX to 907–586–7557;
- E-mail to *bsairel04__2@noaa.gov* and include in the subject line of the e-mail comment the document identifier: bsairel04__2; or
- Webform at the Federal eRulemaking Portal: *www.regulations.gov*. Follow the instructions at that site for submitting comments.

FOR FURTHER INFORMATION CONTACT: Josh Keaton, 907–586–7228.

SUPPLEMENTARY INFORMATION: NMFS manages the groundfish fishery in the BSAI according to the Fishery Management Plan for Groundfish of the Bering Sea and Aleutian Islands Management Area (FMP) prepared by the North Pacific Fishery Management Council under authority of the Magnuson-Stevens Fishery Conservation and Management Act. Regulations governing fishing by U.S. vessels in accordance with the FMP appear at subpart H of 50 CFR part 600 and 50 CFR part 679.

The Administrator, Alaska Region, NMFS, has determined that the initial TACs specified in the 2004 final harvest specifications for groundfish in the BSAI (69 FR 9242, February 27, 2004) for arrowtooth flounder, flathead sole, ''other flatfish'' and rock sole in the BSAI need to be supplemented from the non-specified reserve in order to account for prior harvest.

Therefore, in accordance with § 679.20(b)(3), NMFS apportions amounts from the non-specified reserve to the TACs for the following species or species groups in the BSAI: 5,000 mt to arrowtooth flounder, 500 mt to flathead sole, 1,900 to ''other flatfish'' and 4,190 to rock sole. These apportionments are consistent with § 679.20(b)(1)(ii) and do not result in overfishing of a target species because the revised TACs are equal to or less than specifications of acceptable biological catch (69 FR 9242, February 27, 2004).

Classification

This action responds to the best available information recently obtained from the fishery. The Assistant Administrator for Fisheries, NOAA, (AA) finds good cause to waive the requirement to provide prior notice and opportunity for public comment pursuant to the authority set forth at 5 U.S.C. 553(b)(B) and 679.20 (b)(3)(iii)(A) as such a requirement is impracticable and contrary to the public interest. This requirement is impracticable and contrary to the public interest as it would prevent NMFS from responding to the most recent fisheries data in a timely fashion and would delay the apportionment of the reserves. NMFS was unable to publish a notice providing time for public comment because the most recent, relevant data

only became available as of December 3, 2004.

The AA also finds good cause to waive the 30–day delay in the effective date of this action under 5 U.S.C. 553(d)(3). This finding is based upon the reasons provided above for waiver of prior notice and opportunity for public comment.

Under § 679.20(b)(3)(iii), interested persons are invited to submit written comments on this action (see **ADDRESSES**) until December 29, 2004.

This action is required by 50 CFR 679.20 and is exempt from review under Executive Order 12866.

Authority: 16 U.S.C. 1801, *et seq.*

Dated: December 10, 2004.

Alen D. Risenhoover,

Acting Director, Office of Sustainable Fisheries, National Marine Fisheries Service.

[FR Doc. 04–27432 Filed 12–14–04; 8:45 am]

BILLING CODE 3510–22–S

Proposed Rules

Federal Register
Vol. 69, No. 240
Wednesday, December 15, 2004

This section of the FEDERAL REGISTER contains notices to the public of the proposed issuance of rules and regulations. The purpose of these notices is to give interested persons an opportunity to participate in the rule making prior to the adoption of the final rules.

NUCLEAR REGULATORY COMMISSION

10 CFR Parts 25 and 95

RIN 3150–AH52

Broadening Scope of Access Authorization and Facility Security Clearance Regulations

AGENCY: Nuclear Regulatory Commission.

ACTION: Proposed rule.

SUMMARY: The Nuclear Regulatory Commission (NRC or Commission) is proposing to amend its regulations to broaden the scope of the regulations applicable to persons who may require access to classified information, to include persons who may need access in connection with licensing and regulatory activities under the regulations that govern the disposal of high-level radioactive waste in geologic repositories, and persons who may need access in connection with other activities as the Commission may determine, such as vendors of advanced reactor designs. The Commission is also proposing to amend its regulations to broaden the scope of the regulations applicable to procedures for obtaining facility security clearances, to include persons who may need to use, process, store, reproduce, transmit, transport, or handle NRC classified information in connection with the above-identified activities. In addition, NRC is proposing to correct the scope section of the regulations that govern access authorization for licensee personnel to include certificate holders and applicants for a certificate; to clarify the definition of ''license'' in the regulations that govern access authorization for licensee personnel and govern facility security clearance to include a reference to the regulations that govern combined licenses; to correct a typographical error in the definition of ''security container'' in its facility security regulations; and to update the references to Executive Order 12958 which has been amended.

DATES: Comments on the proposed rule must be received on or before January 14, 2005.

ADDRESSES: You may submit comments by any one of the following methods. Please include the following number (RIN 3150–AH52) in the subject line of your comments. Comments on rulemakings submitted in writing or in electronic form will be made available for public inspection. Because your comments will not be edited to remove any identifying or contact information, the NRC cautions you against including personal information such as social security numbers and birth dates in your submission.

Mail comments to: Secretary, U.S. Nuclear Regulatory Commission, Washington, DC 20555–0001, ATTN: Rulemakings and Adjudications Staff.

E-mail comments to: *SECY@nrc.gov*. If you do not receive a reply e-mail confirming that we have received your comments, contact us directly at (301) 415–1966. You may also submit comments via the NRC's rulemaking Web site at *http://ruleforum.llnl.gov*. Address questions about our rulemaking website to Carol Gallagher (301) 415–5905; e-mail *cag@nrc.gov*. Comments can also be submitted via the Federal eRulemaking Portal *http://www.regulations.gov*.

Hand deliver comments to: 11555 Rockville Pike, Rockville, Maryland 20852, between 7:30 am and 4:15 pm Federal workdays. (Telephone (301) 415–1966).

Fax comments to: Secretary, U.S. Nuclear Regulatory Commission at (301) 415–1101.

Publicly available documents related to this rulemaking may be viewed electronically on the public computers located at the NRC's Public Document Room (PDR), O1 F21, One White Flint North, 11555 Rockville Pike, Rockville, Maryland. The PDR reproduction contractor will copy documents for a fee. Selected documents, including comments, may be viewed and downloaded electronically via the NRC rulemaking Web site at *http://ruleforum.llnl.gov*.

Publicly available documents created or received at the NRC after November 1, 1999, are available electronically at the NRC's Electronic Reading Room at *http://www.nrc.gov/reading-rm/adams.html*. From this site, the public can gain entry into the NRC's Agencywide Document Access and Management System (ADAMS), which provides text and image files of NRC's public documents. If you do not have access to ADAMS or if there are problems in accessing the documents located in ADAMS, contact the NRC Public Document Room (PDR) Reference staff at 1–800–397–4209, 301–415–4737 or by e-mail to *pdr@nrc.gov*.

Note: Public access to documents, including access via ADAMS and the PDR, has been temporarily suspended so that security reviews of publicly available documents may be performed and potentially sensitive information removed. However, access to the documents identified in this rule continues to be available through the rulemaking Web site at *http://ruleforum.llnl.gov*, which was not affected by the ADAMS shutdown. Please check with the listed NRC contact concerning any issues related to document availability.

FOR FURTHER INFORMATION CONTACT: Dr. Anthony N. Tse, Office of Nuclear Material Safety and Safeguards, U.S. Nuclear Regulatory Commission, Washington, DC 20555–0001, telephone (301) 415–6233, e-mail *ant@nrc.gov*.

SUPPLEMENTARY INFORMATION: For additional information see the Direct Final Rule published in the final rules section of this **Federal Register**.

Procedural Background

Because NRC considers this action noncontroversial and routine, we are publishing this proposed rule concurrently as a direct final rule. The direct final rule will become effective on February 28, 2005. However, if the NRC receives significant adverse comments on the proposed rule by January 14, 2005, or if the NRC receives substantive comments on information collection requirements by January 14, 2005, then the NRC will publish a document to withdraw the direct final rule. If the direct final rule is withdrawn, the NRC will address the comments received in response to the proposed revisions in a subsequent final rule. Absent significant modifications to the proposed revisions requiring republication, the NRC will not initiate a second comment period for this action if the direct final rule is withdrawn.

A significant adverse comment is a comment where the commenter explains why the rule would be inappropriate, including challenges to the rule's underlying premise or approach, or would be ineffective or

unacceptable without a change. A comment is adverse and significant if:

(1) The comment opposes the rule and provides a reason sufficient to require a substantive response in a notice-and-comment process. For example, a substantive response is required when:

(a) The comment causes the NRC staff to reevaluate (or reconsider) its position or conduct additional analysis;

(b) The comment raises an issue serious enough to warrant a substantive response to clarify or complete the record; or

(c) The comment raises a relevant issue that was not previously addressed or considered by the NRC staff.

(2) The comment proposes a change or an addition to the rule, and it is apparent that the rule would be ineffective or unacceptable without incorporation of the change or addition.

(3) The comment causes the staff to make a change (other than editorial) to the rule.

List of Subjects

10 CFR Part 25

Classified information, Criminal penalties, Investigations, Reporting and recordkeeping requirements, Security measures.

10 CFR Part 95

Classified information, Criminal penalties, Reporting and recordkeeping requirements, Security measures.

For the reasons set out in the preamble and under the authority of the Atomic Energy Act of 1954, as amended; the Energy Reorganization Act of 1974, as amended; and 5 U.S.C. 552; the NRC is proposing to adopt the following amendments to 10 CFR Parts 25 and 95.

PART 25—ACCESS AUTHORIZATION FOR LICENSEE PERSONNEL

1. The authority citation for Part 25 is revised to read as follows:

Authority: Secs. 145, 161, 68 Stat. 942, 948, as amended (42 U.S.C. 2165, 2201); sec. 201, 88 Stat. 1242, as amended (42 U.S.C. 5841); sec. 1704, 112 Stat. 2750 (44 U.S.C. 3504 note); E.O. 10865, as amended, 3 CFR 1959–1963 Comp., p. 398 (50 U.S.C. 401, note); E.O. 12829, 3 CFR, 1993 Comp., p. 570; E.O. 12958, 3 CFR, 1995 Comp., p. 333, as amended by E.O. 13292, 3 CFR, 2004 Comp., p. 196; E.O. 12968, 3 CFR, 1995 Comp, p. 396.

Appendix A also issued under 96 Stat. 1051 (31 U.S.C. 9701).

2. Section 25.3 is revised to read as follows:

§ 25.3 Scope.

The regulations in this part apply to licensees, certificate holders, and others who may require access to classified information related to a license, certificate, an application for a license or certificate, or other activities as the Commission may determine.

3. In § 25.5, the definitions of Classified National Security Information, License, and National Security Information are revised to read as follows:

§ 25.5 Definitions.

* * * * *

Classified National Security Information means information that has been determined pursuant to E.O. 12958, as amended, or any predecessor order to require protection against unauthorized disclosure and that is so designated.

* * * * *

License means a license issued under 10 CFR Parts 50, 52, 60, 63, 70, or 72.

* * * * *

National Security Information means information that has been determined under Executive Order 12958, as amended, or any predecessor order to require protection against unauthorized disclosure and that is so designated.

* * * * *

4. In § 25.17, paragraph (a) is revised to read as follows:

§ 25.17 Approval for processing applicants for access authorization.

(a) Access authorizations must be requested for licensee employees or other persons (*e.g.*, 10 CFR part 2, subpart I) who need access to classified information in connection with activities under 10 CFR Parts 50, 52, 54, 60, 63, 70, 72, or 76.

* * * * *

5. In § 25.37, paragraph (b) is revised to read as follows:

§ 25.37 Violations.

* * * * *

(b) National Security Information is protected under the requirements and sanctions of Executive Order 12958, as amended.

PART 95—FACILITY SECURITY CLEARANCE AND SAFEGUARDING OF NATIONAL SECURITY INFORMATION AND RESTRICTED DATA

6. The authority for Part 95 is revised to read as follows:

Authority: Secs. 145, 161, 193, 68 Stat. 942, 948, as amended (42 U.S.C. 2165, 2201); sec. 201, 88 Stat. 1242, as amended (42 U.S.C. 5841); sec. 1704, 112 Stat. 2750 (44 U.S.C. 3504 note); E.O. 10865, as amended, 3 CFR 1959–1963 Comp., p. 398 (50 U.S.C. 401, note); E.O. 12829, 3 CFR, 1993 Comp., p. 570; E.O. 12958, as amended, 3 CFR, 1995 Comp., p. 333, as amended by E.O. 13292, 3 CFR, 2004 Comp., p.196; E.O. 12968, 3 CFR, 1995 Comp., p. 391.

7. Section 95.3 is revised to read as follows:

§ 95.3 Scope.

The regulations in this part apply to licensees, certificate holders and others who may require access to classified National Security Information and/or Restricted Data and/or Formerly Restricted Data (FRD) that is used, processed, stored, reproduced, transmitted, transported, or handled in connection with a license or certificate or an application for a license or certificate, or other activities as the Commission may determine.

8. In § 95.5, the definitions of License and paragraph (2) of Security container are revised to read as follows:

§ 95.5 Definitions.

* * * * *

License means a license issued pursuant to 10 CFR Parts 50, 52, 60, 63, 70, or 72.

* * * * *

Security container includes any of the following repositories:

* * * * *

(2) A safe—burglar-resistive cabinet or chest which bears a label of the Underwriters' Laboratories, Inc., certifying the unit to be a TL–15, TL–30, or TRTL–30, and has a body fabricated of not less than 1 inch of steel and a door fabricated of not less than 1½ inches of steel exclusive of the combination lock and bolt work; or bears a Test Certification Label on the inside of the door, or is marked ''General Services Administration Approved Security Container'' and has a body of steel at least ½ inch thick, and a combination locked steel door at least 1 inch thick, exclusive of bolt work and locking devices; and an automatic unit locking mechanism.

* * * * *

9. Section 95.59 is revised to read as follows:

§ 95.59 Inspections.

The Commission shall make inspections and reviews of the premises, activities, records and procedures of any person subject to the regulations in this part as the Commission and CSA deem necessary to effect the purposes of the Act, E.O. 12958, as amended, and/or NRC rules.

Dated at Rockville, Maryland, this 30th day of November, 2004.

For the Nuclear Regulatory Commission.

Luis A. Reyes,

Executive Director for Operations.

[FR Doc. 04–27406 Filed 12–14–04; 8:45 am]

BILLING CODE 7590–01–P

DEPARTMENT OF HOMELAND SECURITY

Coast Guard

33 CFR Parts 110 and 165

[CGD05–04–035]

RIN 1625–AA00, 1625–AA01

Anchorage Grounds and Safety Zone; Delaware River

AGENCY: Coast Guard, DHS.

ACTION: Notice of proposed rulemaking.

SUMMARY: The Coast Guard proposes to establish a permanent safety zone and to modify Anchorage 6 off Deepwater Point, Anchorage 7, off Marcus Hook, and Anchorage 9, near the entrance to Mantua Creek on the Delaware River in the area of the Marcus Hook Range Channel. The U.S. Army Corps of Engineers (USACE) conducts annual dredging operations between September 1 and December 31, which is necessary to maintain congressionally authorized project depths. The safety zone and anchorage modifications are necessary to ensure safe vessel transits during the dredging operations. These regulations will temporarily alter the route of vessels transiting the channel and requirements for those vessels wishing to anchor during the dredging operations.

DATES: Comments and related material must reach the Coast Guard on or before January 14, 2005.

ADDRESSES: You may mail comments and related material to Coast Guard Marine Safety Office Philadelphia, One Washington Avenue, Philadelphia, Pennsylvania, 19147. The Marine Safety Office Philadelphia Waterways Management Branch maintains the public docket for this rulemaking. Comments and material received from the public, as well as documents indicated in this preamble as being available in the docket, will become part of this docket and will be available for inspection or copying at Coast Guard Marine Safety Office Philadelphia between 8 a.m. and 4 p.m., Monday through Friday, except Federal holidays.

FOR FURTHER INFORMATION CONTACT: Lieutenant Junior Grade Kevin Sligh or Ensign Jill Munsch, Coast Guard Marine Safety Office/Group Philadelphia, at (215) 271–4889.

SUPPLEMENTARY INFORMATION:

Request for Comments

We encourage you to participate in this rulemaking by submitting comments and related material. If you do so, please include your name and address, identify the docket number for this rulemaking (CGD05–04–035), indicate the specific section of this document to which each comment applies, and give the reason for each comment. Please submit all comments and related material in an unbound format, no larger than 8½ by 11 inches, suitable for copying. If you would like to know they reached us, please enclose a stamped, self-addressed postcard or envelope. We will consider all comments and material received during the comment period. We may change this proposed rule in view of them.

Public Meeting

We do not now plan to hold a public meeting but you may submit a request for a meeting by writing to the Marine Safety Office Philadelphia, Waterways Management Branch to the address under **ADDRESSES** explaining why one would be beneficial. If we determine that one would aid this rulemaking, we will hold one at a time and place announced by a later notice in the **Federal Register**.

Background and Purpose

USACE conducts annual dredging operations on the Delaware River in the vicinity of the Marcus Hook Range Channel to maintain the authorized forty-foot Federal navigation project depth. The dredging occurs between September 1 and December 31 of each year.

To reduce the hazards associated with dredging the channel, vessel traffic that would normally transit through the Marcus Hook Range Channel will be diverted through part of Anchorage 7 during the dredging operations. Therefore, additional requirements and restrictions on the use of Anchorage 7 are necessary.

For the protection of mariners transiting in the vicinity of dredging operations, the Coast Guard also proposes to establish a safety zone in all waters within a 150-yard radius around the dredging vessels. The safety zone is intended to protect mariners from the potential hazards associated with dredging operations and equipment, and to protect vessels engaged in dredging operations.

Discussion of Proposed Rule

The Coast Guard proposes to place a permanent safety zone in waters within a 150-yard radius around vessels engaged in dredging operations in the Marcus Hook Range Channel and to place additional requirements and restrictions at Anchorage 6 and Anchorage 7.

The safety zone will protect mariners transiting the area from the potential hazards associated with dredging operations. Vessels transiting the Marcus Hook Range Channel will need to divert from the main ship channel through Anchorage 7 and must operate at the minimum safe speed necessary to maintain steerage and reduce wake. No vessel would be allowed to enter the safety zone unless it received permission from the Captain of the Port or his designated representative.

The Coast Guard is proposing the placement of additional requirements on vessels in the affected anchorages. Pursuant to 33 CFR Section 110.157(b)(2) vessels are allowed to anchor for up to 48 hours in the anchorage grounds listed in § 110.157(a), which includes Anchorage 7. However, because of the limited anchorage space available in Anchorage 7, the Coast Guard is adding a paragraph in 33 CFR 110.157(b) to provide additional requirements and restrictions on vessels utilizing Anchorage 7 during the USACE dredging of Marcus Hook Reach Channel. During the enforcement period, vessels desiring to use Anchorage 7 must obtain permission from the Captain of the Port Philadelphia at least 24 hours in advance. The Captain of the Port would permit only one vessel at a time to anchor in Anchorage 7 and would grant permission on a ''first come, first serve'' basis. A vessel would be directed to a location within Anchorage 7 where it may anchor, and would not be permitted to remain in Anchorage 7 for more than 12 hours.

The Coast Guard expects that vessels normally permitted to anchor in Anchorage 7 would use Anchorage 6 or Anchorage 9, because they are the next closest anchorage grounds. To control access to Anchorage 7, the Coast Guard proposes to require a vessel desiring to anchor in Anchorage 7 to obtain advance permission from the Captain of the Port. To control access to Anchorages 6 and 9, the Coast Guard would require any vessel 700 feet or greater in length to obtain advance permission from the Captain of the Port before anchoring. Anchorages 6 and 9 are not as large as Anchorage 7; therefore the need exists to have one or two tugs on scene while a vessel is anchored in those anchorages. The purpose of this is to prohibit vessels from swinging into the channel or going

aground. A vessel 700 to 750 feet in length would be required to have one tug standing alongside while at anchor and a vessel over 750 feet in length would require two tugs standing alongside. The tug(s) would be required to have sufficient horsepower to prevent the vessel they are attending from swinging into the channel.

Regulatory Evaluation

This proposed rule is not a ''significant regulatory action'' under section 3(f) of Executive Order 12866, Regulatory Planning and Review, and does not require an assessment of potential costs and benefits under section 6(a)(3) of that Order. The Office of Management and Budget has not reviewed it under that Order. It is not ''significant'' under the regulatory policies and procedures of the Department of Homeland Security (DHS).

We expect the economic impact of this proposed rule to be so minimal that a full Regulatory Evaluation under the regulatory policies and procedures of DHS is unnecessary. Although this proposed regulation would require certain vessels to have one or two tugs alongside while at anchor, the requirement only applies to vessels 700 feet or greater in length that choose to anchor in Anchorages 6 and 9. Alternate anchorage grounds such as Anchorage A off the entrance to Mispillion River (Breakwater & Big Stone Beach) and Anchorage 1 off Bombay Hook Point (Bombay Hook) in Delaware Bay, are reasonably close and generally available. Vessels anchoring in Breakwater and Big Stone Beach are not required to have tugs alongside, except when specifically directed to do so by the Captain of the Port because of a specific hazardous condition. The majority of vessels expected during the enforcement period are less than 700 feet and thus will not be required to have tugs alongside.

Small Entities

Under the Regulatory Flexibility Act (5 U.S.C. 601–612), we have considered whether this proposed rule would have a significant economic impact on a substantial number of small entities. The term ''small entities'' comprises small businesses, not-for-profit organizations that are independently owned and operated and are not dominant in their fields, and governmental jurisdictions with populations of less than 50,000.

The greatest impact of this proposed rule would be on vessels larger than 700 feet in length that choose to anchor in Anchorages 6 and 9. This proposed rule would have no impact on any small entities. Therefore, the Coast Guard certifies under 5 U.S.C. 605(b) that this proposed rule would not have a significant economic impact on a substantial number of small entities.

If you think that your business, organization, or governmental jurisdiction qualifies as a small entity and that this rule would have a significant economic impact on it, please submit a comment (see **ADDRESSES**) explaining why you think it qualifies and how and to what degree this rule would economically affect it.

Assistance for Small Entities

Under section 213(a) of the Small Business Regulatory Enforcement Fairness Act of 1996 (Pub. L. 104–121), we want to assist small entities in understanding this proposed rule so that they could better evaluate its effects on them and participate in the rulemaking process. If the rule would affect your small business, organization, or governmental jurisdiction and you have questions concerning its provisions or options for compliance, please contact Lieutenant Junior Grade Kevin Sligh or Ensign Jill Munsch, Coast Guard Marine Safety Office/Group Philadelphia, at (215) 271–4889.

Collection of Information

This proposed rule calls for no new collection of information under the Paperwork Reduction Act of 1995 (44 U.S.C. 3501–3520).

Federalism

A rule has implications for federalism under Executive Order 13132, Federalism, if it has a substantial direct effect on State or local governments and would either preempt State law or impose a substantial direct cost of compliance on them. We have analyzed this proposed rule under that Order and have determined that it does not have implications for federalism.

Unfunded Mandates Reform Act

The Unfunded Mandates Reform Act of 1995 (2 U.S.C. 1531–1538) requires Federal agencies to assess the effects of their discretionary regulatory actions. In particular, the Act addresses actions that may result in the expenditure by a State, local, or tribal government, in the aggregate, or by the private sector of $100,000,000 or more in any one year. Though this proposed rule will not result in such an expenditure, we do discuss the effects of this rule elsewhere in this preamble.

Taking of Private Property

This proposed rule would not effect a taking of private property or otherwise have taking implications under Executive Order 12630, Governmental Actions and Interference with Constitutionally Protected Property Rights.

Civil Justice Reform

This proposed rule meets applicable standards in sections 3(a) and 3(b)(2) of Executive Order 12988, Civil Justice Reform, to minimize litigation, eliminate ambiguity, and reduce burden.

Protection of Children

We have analyzed this proposed rule under Executive Order 13045, Protection of Children from Environmental Health Risks and Security Risks. This rule is not an economically significant rule and does not create an environmental risk to health or risk to security that might disproportionately affect children.

Indian Tribal Governments

This proposed rule does not have tribal implications under Executive Order 13175, Consultation and Coordination with Indian Tribal Governments, because it would not have a substantial direct effect on one or more Indian tribes, on the relationship between the Federal Government and Indian tribes, or on the distribution of power and responsibilities between the Federal Government and Indian tribes. We invite your comments on how this proposed rule might impact tribal governments, even if that impact may not constitute a ''tribal implication'' under the Order.

Energy Effects

We have analyzed this proposed rule under Executive Order 13211, Actions Concerning Regulations That Significantly Affect Energy Supply, Distribution, or Use. We have determined that it is not a ''significant energy action'' under that order because it is not a ''significant regulatory action'' under Executive Order 12866 and is not likely to have a significant adverse effect on the supply, distribution, or use of energy. The Administrator of the Office of Information and Regulatory Affairs has not designated it as a significant energy action. Therefore, it does not require a Statement of Energy Effects under Executive Order 13211.

Technical Standards

The National Technology Transfer and Advancement Act (NTTAA) (15 U.S.C. 272 note) directs agencies to use

voluntary consensus standards in their regulatory activities unless the agency provides Congress, through the Office of Management and Budget, with an explanation of why using these standards would be inconsistent with applicable law or otherwise impractical. Voluntary consensus standards are technical standards (*e.g.*, specifications of materials, performance, design, or operation; test methods; sampling procedures; and related management systems practices) that are developed or adopted by voluntary consensus standards bodies.

This proposed rule does not use technical standards. Therefore, we did not consider the use of voluntary consensus standards.

Environment

We have analyzed this rule under Commandant Instruction M16475.1D, which guides the Coast Guard in complying with the National Environmental Policy Act of 1969 (NEPA) (42 U.S.C. 4321–4370f), and have concluded that there are no factors in this case that would limit the use of a categorical exclusion under section 2.B.2 of the Instruction. Therefore, this rule is categorically excluded, under figure 2–1, paragraphs 34(f) and (34)(g), of the Instruction, from further environmental documentation.

A draft ''Environmental Analysis Check List'' and a ''Categorical Exclusion Determination'' are available in the docket where indicated under **ADDRESSES**. Comments on this section will be considered before we make the final decision on whether to categorically exclude this rule from further environmental review.

List of Subjects

33 CFR Part 110

Anchorage grounds.

33 CFR Part 165

Harbors, Marine safety, Navigation (water), Reporting and record keeping requirements, Security measures, Waterways.

For the reasons discussed in the preamble, the Coast Guard proposes to amend 33 CFR parts 110 and 165 as follows:

PART 110—ANCHORAGE REGULATIONS

1. The authority citation for part 110 continues to read as follows:

Authority: 33 U.S.C. 471, 1221 through 1236, 2030, 2035, and 2071; 33 CFR 1.05–1(g). Department of Homeland Security Delegation No. 0170.1.

2. Amend § 110.157 by adding paragraph (b)(11) to read as follows:

§ 110.157 Delaware Bay and River.

* * * * *

(b) * * *

(11) From September 1 through December 31 each year, the following requirements and restrictions apply:

(i) Before anchoring in Anchorage 7 off Marcus Hook, as described in paragraph (a)(8) of this section, a vessel must first obtain permission from the Captain of the Port, Philadelphia, at least 24 hours in advance of arrival. Permission to anchor will be granted on a ''first-come, first-serve'' basis. The Captain of the Port, Philadelphia will allow only one vessel at a time to be at anchor in Anchorage 7, and no vessel may remain within Anchorage 7 for more than 12 hours. Any vessel arriving from or departing to sea that requires an examination by the public health service, customs or immigration authorities will be directed to an anchorage for the required inspection by the Captain of the Port on a case-by-case basis.

(ii) For Anchorage 6 off Deepwater Point, as described in paragraph (a)(7) of this section, and Anchorage 9 near entrance to Mantua Creek, as described in paragraph (a)(10) of this section.

(A) Any vessel 700 feet or greater in length requesting anchorage shall obtain permission from the Captain of the Port, Philadelphia, Pennsylvania, at least 24 hours in advance.

(B) Any vessel from 700 to 750 feet in length shall have one tug alongside at all times while the vessel is at anchor.

(C) Any vessel greater than 750 feet in length shall have two tugs alongside at all times while the vessel is at anchor.

(D) The Master, owner or operator of a vessel at anchor shall ensure that any tug required by this section is of sufficient horsepower to assist with necessary maneuvers to keep the vessel clear of the navigation channel.

(iii) As used in this section, Captain of the Port means the Captain of the Port, Philadelphia, Pennsylvania or any Coast Guard commissioned, warrant, or petty officer authorized to act on his behalf. The Captain of the Port may be contacted by telephone at (215) 271–4807 or via VHF marine band radio, channels 13 and 16.

* * * * *

PART 165—REGULATED NAVIGATION AREAS AND LIMITED ACCESS AREAS

3. The authority citation for part 165 continues to read as follows:

Authority: 33 U.S.C. 1226, 1231; 46 U.S.C. Chapter 701; 50 U.S.C. 191, 195; 33 CFR 1.05–1(G), 6.04–1, 6.04–6, and 160.5; Pub. L. 107–295, 116 Stat. 2064; Department of Homeland Security Delegation No. 0170.1.

4. Add § 165.509 to read as follows:

§ 165.509 Safety Zone; Delaware River

(a) *Definition.* As used in this section, *Captain of the Port* means the Commanding Officer of the Coast Guard Marine Safety Office/Group Philadelphia or any Coast Guard commissioned, warrant or petty officer who has been authorized by the Captain of the Port to act on his behalf. The Captain of the Port may be contacted by telephone at (215) 271–4807 or via VHF marine band radio, channels 13 and 16.

(b) *Location.* The following area is a safety zone:

All waters located within a 150-yard radius arc centered on the dredging operation and barge, conducting dredging operations in or near the Marcus Hook Range Channel in the vicinity of Anchorage 7 off Marcus Hook.

(c) *Enforcement.* This safety zone will be enforced annually from September 1 through December 31.

(d) *Regulations.*

(1) All persons are required to comply with the general regulations governing safety zones in 33 CFR 165.23 of this part.

(2) All Coast Guard vessels enforcing this safety zone or watch officers aboard the dredge and barge can be contacted on VHF marine band radio, channels 13 and 16. The Captain of the Port can be contacted at (215) 271–4807.

Dated: August 19, 2004.

Ben Thomason III,

Captain, U.S. Coast Guard, Acting Commander, Fifth Coast Guard District.

[FR Doc. 04–27473 Filed 12–14–04; 8:45 am]

BILLING CODE 4910–15–P

DEPARTMENT OF HOMELAND SECURITY

Coast Guard

33 CFR Part 117

[CGD01–04–047]

RIN 1625–AA09

Drawbridge Operation Regulations; Long Island, New York Inland Waterway from East Rockaway Inlet to Shinnecock Canal, NY

AGENCY: Coast Guard, DHS.

ACTION: Notice of proposed rulemaking.

SUMMARY: The Coast Guard proposes to change the drawbridge operating regulations governing the operation of

the Long Beach Bridge, at mile 4.7, across Reynolds Channel New York. This notice of proposed rulemaking would allow the Long Beach Bridge to remain closed from 10 p.m. to midnight on July 3 each year. This rule is necessary to facilitate public safety during the annual fireworks display at Town Park on Lookout Point, New York.

DATES: Comments must reach the Coast Guard on or before February 14, 2005.

ADDRESSES: You may mail comments to Commander (obr), First Coast Guard District Bridge Branch, One South Street, Battery Park Building, New York, New York, 10004, or deliver them to the same address between 7 a.m. and 3 p.m., Monday through Friday, except Federal holidays. The telephone number is (212) 668–7165. The First Coast Guard District, Bridge Branch, maintains the public docket for this rulemaking. Comments and material received from the public, as well as documents indicated in this preamble as being available in the docket, will become part of this docket and will be available for inspection or copying at the First Coast Guard District, Bridge Branch, 7 a.m. to 3 p.m., Monday through Friday, except Federal holidays.

FOR FURTHER INFORMATION CONTACT: Mr. Gary Kassof, Bridge Administrator, First Coast Guard District, (212) 668–7165.

SUPPLEMENTARY INFORMATION:

Request for Comments

We encourage you to participate in this rulemaking by submitting comments or related material. If you do so, please include your name and address, identify the docket number for this rulemaking (CGD01–04–047), indicate the specific section of this document to which each comment applies, and give the reason for each comment. Please submit all comments and related material in an unbound format, no larger than 8½ by 11 inches, suitable for copying. If you would like to know if they reached us, please enclose a stamped, self-addressed postcard or envelope. We will consider all comments and material received during the comment period. We may change this proposed rule in view of them.

Public Meeting

We do not now plan to hold a public meeting. But you may submit a request for a meeting by writing to the First Coast Guard District, Bridge Branch, at the address under **ADDRESSES** explaining why one would be beneficial. If we determine that one would aid this rulemaking, we will hold one at a time and place announced by a later notice in the **Federal Register**.

Background and Purpose

The Long Beach Bridge has a vertical clearance of 20 feet at mean high water and 24 feet at mean low water. The existing regulations are listed at 33 CFR 117.799(g).

The Town of Hempstead, Department of Public Works requested that the Long Beach Bridge opening schedule be changed to allow the Long Beach Bridge to remain closed from 10 p.m. to midnight on July 3 each year to facilitate vehicular traffic and public safety during the annual Salute to Veterans and Fireworks Display at Town Park on Lookout Point, New York.

On June 2, 2004, we published a temporary deviation and request for comment entitled Drawbridge Operation Regulations; Long Island, New York Inland Waterway from East Rockaway Inlet to Shinnecock Canal, New York, in the **Federal Register** (69 FR 31005). We received no comments in response to our temporary deviation and request for comment.

Discussion of Proposed Rule

This proposed change would amend 33 CFR 117.799 by adding a new paragraph (g)(3).

This proposed change would allow the above bridge to remain in the closed position from 10 p.m. to midnight on July 3 each year to facilitate public safety during the annual fireworks display at Town Park on Lookout Point, New York.

Regulatory Evaluation

This proposed rule is not a ''significant regulatory action'' under section 3(f) of Executive Order 12866, Regulatory Planning and Review, and does not require an assessment of potential costs and benefits under 6(a)(3) of that Order. The Office of Management and Budget has not reviewed it under that Order. It is not ''significant'' under the regulatory policies and procedures of the Department of Homeland Security.

We expect the economic impact of this proposed rule to be so minimal that a full Regulatory Evaluation, under the regulatory policies and procedures of DHS, is unnecessary.

This conclusion is based on the fact that the bridge closure is of short duration in the interest of public safety.

Small Entities

Under the Regulatory Flexibility Act (5 U.S.C. 601–612), we considered whether this proposed rule would have a significant economic impact on a substantial number of small entities. The term ''small entities'' comprises small businesses, not-for-profit organizations that are independently owned and operated and are not dominant in their fields, and governmental jurisdictions with populations of less than 50,000.

The Coast Guard certifies under section 5 U.S.C. 605(b), that this proposed rule would not have a significant economic impact on a substantial number of small entities.

This conclusion is based on the fact that the bridge closures are of short duration in the interest of public safety.

If you think that your business, organization, or governmental jurisdiction qualifies as a small entity and that this rule would have a significant economic impact on it, please submit a comment (see **ADDRESSES**) explaining why you think it qualifies and how and to what degree this rule would economically affect it.

Assistance for Small Entities

Under section 213(a) of the Small Business Regulatory Enforcement Fairness Act of 1996 (Public Law 104–121), we want to assist small entities in understanding this proposed rule so that they can better evaluate its effects on them and participate in the rulemaking. If the rule would affect your small business, organization, or governmental jurisdiction and you have questions concerning its provisions or options for compliance, please contact us in writing at, Commander (obr), First Coast Guard District, Bridge Branch, 408 Atlantic Avenue, Boston, MA 02110–3350. The telephone number is (617) 223–8364. The Coast Guard will not retaliate against small entities that question or complain about this rule or any policy or action of the Coast Guard.

Collection of Information

This proposed rule would call for no new collection of information under the Paperwork Reduction Act of 1995 (44 U.S.C. 3501–3520.).

Federalism

Arule has implications for federalism under Executive Order 13132, Federalism, if it has a substantial direct effect on State or local governments and would either preempt State law or impose a substantial direct cost of compliance on them. We have analyzed this proposed rule under that Order and have determined that it does not have implications for federalism.

Unfunded Mandates Reform Act

The Unfunded Mandates Reform Act of 1995 (2 U.S.C. 1531–1538) requires

Federal agencies to assess the effects of their discretionary regulatory actions. In particular, the Act addresses actions that may result in the expenditure by a State, local, or tribal government, in the aggregate, or by the private sector of $100,000,000 or more in any one year. Though this proposed rule would not result in such an expenditure, we do discuss the effects of this rule elsewhere in this preamble.

Taking of Private Property

This proposed rule would not affect a taking of private property or otherwise have taking implications under E.O. 12630, Governmental Actions and Interference with Constitutionally Protected Property Rights.

Civil Justice Reform

This proposed rule meets applicable standards in sections 3(a) and 3(b)(2) of Executive Order 12988, Civil Justice Reform, to minimize litigation, eliminate ambiguity, and reduce burden.

Protection of Children

We have analyzed this proposed rule under Executive Order 13045, Protection of Children from Environmental Health Risks and Safety Risks. This rule is not an economically significant rule and would not create an environmental risk to health or risk to safety that may disproportionately affect children.

Indian Tribal Governments

This proposed rule does not have tribal implications under Executive Order 13175, Consultation and Coordination with Indian Tribal Governments, because it would not have a substantial direct effect on one or more Indian tribes, on the relationship between the Federal Government and Indian tribes, or on the distribution of power and responsibilities between the Federal Government and Indian tribes.

Energy Effects

We have analyzed this proposed rule under Executive Order 13211, Actions Concerning Regulations That Significantly Affect Energy Supply, Distribution, or Use. We have determined that it is not a ''significant energy action'' under that order because it is not a ''significant regulatory action'' under Executive Order 12866 and is not likely to have a significant adverse effect on the supply, distribution, or use of energy. The Administrator of the Office of Information and Regulatory Affairs has not designated it as a significant energy action. Therefore, it does not require a Statement of Energy Effects under Executive Order 13211.

Technical Standards

The National Technology Transfer and Advancement Act (NTTAA) (15 U.S.C. 272 note) directs agencies to use voluntary consensus standards in their regulatory activities unless the agency provides Congress, through the Office of Management and Budget, with an explanation of why using these standards would be inconsistent with applicable law or otherwise impractical. Voluntary consensus standards are technical standards (*e.g.*, specifications of materials, performance, design, or operation; test methods; sampling procedures; and related management systems practices) that are developed or adopted by voluntary consensus standards bodies.

This proposed rule does not use technical standards. Therefore, we did not consider the use of voluntary consensus standards.

Environment

We have analyzed this proposed rule under Commandant Instruction M16475.1D, which guides the Coast Guard in complying with the National Environmental Policy Act of 1969 (NEPA) (42 U.S.C. 4321–4370f), and have concluded that there are no factors in this case that would limit the use of a categorical exclusion under section 2.B.2 of the Instruction. Therefore, this proposed rule is categorically excluded, under figure 2–1, paragraph (32)(e), of the Instruction, from further environment documentation because it has been determined that the promulgation of operating regulations or procedures for drawbridges are categorically excluded.

List of Subjects in 33 CFR Part 117

Bridges.

Regulations

For the reasons set out in the preamble, the Coast Guard proposes to amend 33 CFR part 117 as follows:

PART 117—DRAWBRIDGE OPERATION REGULATIONS

1. The authority citation for part 117 continues to read as follows:

Authority: 33 U.S.C. 499; Department of Homeland Security Delegation No. 0170.1; 33 CFR 1.05–1(g); section 117.255 also issued under the authority of Pub. L. 102–587, 106 Stat. 5039.

2. Section 117.799 is amended by adding a new paragraph (g)(3) to read as follows:

§ 117.799 Long Island, New York Inland Waterway from East Rockaway Inlet to Shinnecock Canal.

* * * * *

(g) * * * (3) From 10 p.m. to midnight on July 3 each year the draw need not open for the passage of vessel traffic.

* * * * *

Dated: December 6, 2004.

David P. Pekoske,

Rear Admiral, U.S. Coast Guard, Commander, First Coast Guard District.

[FR Doc. 04–27470 Filed 12–14–04; 8:45 am]

BILLING CODE 4910–15–P

DEPARTMENT OF HOMELAND SECURITY

Coast Guard

33 CFR Part 117

[CGD01–04–143]

RIN 2115–AE47

Drawbridge Operation Regulations; Taunton River, MA

AGENCY: Coast Guard, DHS.

ACTION: Notice of proposed rulemaking.

SUMMARY: The Coast Guard proposes to change the drawbridge operating regulations governing the operation of the Brightman Street Bridge, mile 1.8, across the Taunton River between Fall River and Somerset, Massachusetts. This proposed change to the drawbridge operation regulations would allow the bridge to remain closed for the passage of pleasure craft traffic from 7 a.m. to 9:30 a.m. and 4 p.m. to 6:30 p.m., Monday through Friday, except holidays, from June 1 through August 31. The draw would open on signal at all times for commercial vessel traffic. This action is expected to help relieve vehicular traffic delays during the morning and afternoon commuter time periods while continuing to meet the reasonable needs of navigation.

DATES: Comments must reach the Coast Guard on or before February 14, 2005.

ADDRESSES: You may mail comments to Commander (obr), First Coast Guard District Bridge Branch, 408 Atlantic Avenue, Boston, Massachusetts 02110, or deliver them to the same address between 7 a.m. and 3 p.m., Monday through Friday, except, Federal holidays. The telephone number is (617) 223–8364. The First Coast Guard District, Bridge Branch, maintains the public docket for this rulemaking. Comments and material received from the public, as well as documents

indicated in this preamble as being available in the docket, will become part of this docket and will be available for inspection or copying at the First Coast Guard District, Bridge Branch, 7 a.m. to 3 p.m., Monday through Friday, except Federal holidays.

FOR FURTHER INFORMATION CONTACT: Joe Arca, Project Officer, First Coast Guard District, (212) 668–7165.

SUPPLEMENTARY INFORMATION:

Request for Comments

We encourage you to participate in this rulemaking by submitting comments or related material. If you do so, please include your name and address, identify the docket number for this rulemaking (CGD01–04–143), indicate the specific section of this document to which each comment applies, and give the reason for each comment. Please submit all comments and related material in an unbound format, no larger than 8½ by 11 inches, suitable for copying. If you would like to know if they reached us, please enclose a stamped, self-addressed postcard or envelope. We will consider all comments and material received during the comment period. We may change this proposed rule in view of them.

Public Meeting

We do not now plan to hold a public meeting. But you may submit a request for a meeting by writing to the First Coast Guard District, Bridge Branch, at the address under **ADDRESSES** explaining why one would be beneficial. If we determine that one would aid this rulemaking, we will hold one at a time and place announced by a later notice in the **Federal Register**.

Background

The Brightman Street Bridge has a vertical clearance in the closed position of 27 feet at mean high water and 31 feet at mean low water. The existing drawbridge operation regulations are listed at 33 CFR 117.619(b).

The Town of Somerset and the Massachusetts State Police asked the Coast Guard and the bridge owner, Massachusetts Highway Department, for assistance with vehicular traffic delays resulting from unregulated bridge openings during the morning and afternoon rush hours at the Brightman Street Bridge.

The Coast Guard, in response to the above request, issued a temporary deviation from the drawbridge operation regulations (69 FR 35244) on June 24, 2004, with a request for public comment.

The temporary deviation was in effect for a period of 90-days to test an alternate operation schedule which is the same schedule proposed in this notice of proposed rulemaking.

Under the temporary deviation effective from July 1, 2004 through September 28, 2004, the Brightman Street Bridge remained closed for the passage of pleasure craft from 7 a.m. to 9:30 a.m. and from 4 p.m. to 6:30 p.m., Monday through Friday. Commercial vessel traffic was allowed to pass through the bridge on signal at all times during the 90-day test period.

The drawbridge operation schedule implemented during the 90-day test period successfully alleviated vehicular traffic delays with no known adverse effects on navigation. The Coast Guard received no comment letters in response to the temporary deviation.

Discussion of Proposal

This proposed change would amend 33 CFR 117.619 by revising paragraph (b), which lists the Brightman Street Bridge drawbridge operation regulations. This proposed change would allow the Brightman Street Bridge to remain closed to pleasure craft 7 a.m. to 9:30 a.m. and 4 p.m. to 6:30 p.m., Monday through Friday, except holidays, from June 1 through August 31.

Regulatory Evaluation

This proposed rule is not a ''significant regulatory action'' under section 3(f) of Executive Order 12866, Regulatory Planning and Review, and does not require an assessment of potential costs and benefits under 6(a)(3) of that Order. The Office of Management and Budget has not reviewed it under that Order. It is not ''significant'' under the regulatory policies and procedures of the Department of Transportation (DOT) (44 FR 11040, Feb. 26, 1979).

We expect the economic impact of this proposed rule to be so minimal that a full Regulatory Evaluation, under paragraph 10e of the regulatory policies and procedures of DOT, is unnecessary.

This conclusion is based on the fact that the bridge will continue to open at all times for commercial vessel traffic.

Small Entities

Under the Regulatory Flexibility Act (5 U.S.C. 601–612), we considered whether this proposed rule would have a significant economic impact on a substantial number of small entities. The term ''small entities'' comprises small businesses, not-for-profit organizations that are independently owned and operated and are not dominant in their fields, and governmental jurisdictions with populations of less than 50,000.

The Coast Guard certifies under section 5 U.S.C. 605(b), that this proposed rule would not have a significant economic impact on a substantial number of small entities.

This conclusion is based on the fact that the bridge will continue to open for commercial vessel traffic at all times.

If you think that your business, organization, or governmental jurisdiction qualifies as a small entity and that this rule would have a significant economic impact on it, please submit a comment (see **ADDRESSES**) explaining why you think it qualifies and how and to what degree this rule would economically affect it.

Collection of Information

This proposed rule would call for no new collection of information under the Paperwork Reduction Act of 1995 (44 U.S.C. 3501–3520.).

Federalism

Arule has implications for federalism under Executive Order 13132, Federalism, if it has a substantial direct effect on State or local governments and would either preempt State law or impose a substantial direct cost of compliance on them. We have analyzed this proposed rule under that Order and have determined that it does not have implications for federalism.

Unfunded Mandates Reform Act

The Unfunded Mandates Reform Act of 1995 (2 U.S.C. 1531–1538) requires Federal agencies to assess the effects of their discretionary regulatory actions. In particular, the Act addresses actions that may result in the expenditure by a State, local, or tribal government, in the aggregate, or by the private sector of $100,000,000 or more in any one year. Though this proposed rule would not result in such an expenditure, we do discuss the effects of this rule elsewhere in this preamble.

Taking of Private Property

This proposed rule would not effect a taking of private property or otherwise have taking implications under E.O. 12630, Governmental Actions and Interference with Constitutionally Protected Property Rights.

Civil Justice Reform

This proposed rule meets applicable standards in sections 3(a) and 3(b)(2) of Executive Order 12988, Civil Justice Reform, to minimize litigation, eliminate ambiguity, and reduce burden.

Protection of Children

We have analyzed this proposed rule under Executive Order 13045, Protection of Children from Environmental Health Risks and Safety Risks. This rule is not an economically significant rule and would not create an environmental risk to health or risk to safety that may disproportionately affect children.

Indian Tribal Governments

This proposed rule does not have tribal implications under Executive Order 13175, Consultation and Coordination with Indian Tribal Governments, because it would not have a substantial direct effect on one or more Indian tribes, on the relationship between the Federal Government and Indian tribes, or on the distribution of power and responsibilities between the Federal Government and Indian tribes.

Energy Effects

We have analyzed this proposed rule under Executive Order 13211, Actions Concerning Regulations That Significantly Affect Energy Supply, Distribution, or Use. We have determined that it is not a ''significant energy action'' under that order because it is not a ''significant regulatory action'' under Executive Order 12866 and is not likely to have a significant adverse effect on the supply, distribution, or use of energy. It has not been designated by the Administrator of the Office of Information and Regulatory Affairs as a significant energy action. Therefore, it does not require a Statement of Energy Effects under Executive Order 13211.

Environment

We considered the environmental impact of this proposed rule and concluded that, under figure 2–1, paragraph (32)(e), of Commandant Instruction M16475.1d, this proposed rule is categorically excluded from further environmental documentation because promulgation of drawbridge regulations have been found not to have a significant effect on the environment. A written ''Categorical Exclusion Determination'' is not required for this rule.

List of Subjects in 33 CFR Part 117

Bridges.

Regulations

For the reasons set out in the preamble, the Coast Guard proposes to amend 33 CFR part 117 as follows:

PART 117—DRAWBRIDGE OPERATION REGULATIONS

1. The authority citation for part 117 continues to read as follows:

Authority: 33 U.S.C. 499; 49 CFR 1.46; 33 CFR 1.05–1(g); section 117.255 also issued under the authority of Pub. L. 102–587, 106 Stat. 5039.

2. Section 117.619 is amended by revising paragraph (b) to read as follows:

§ 117.619 Taunton River.

* * * * *

(b) The Brightman Street Bridge, at mile 1.8, between Fall River and Somerset, shall open on signal, except that:

(1) From June 1 through August 31, the draw need not open for the passage of pleasure craft, from 7 a.m. to 9:30 a.m. and from 4 p.m. to 6:30 p.m., Monday through Friday, except holidays. The draw shall open on signal for commercial vessel traffic at all times.

(2) From November 1 through March 31, between 6 p.m. and 6 a.m. daily, the draw shall open if at least a one-hour advance notice is given by calling the number posted at the bridge.

(3) From 6 p.m. on December 24 to midnight on December 25, and from 6 p.m. on December 31 to midnight on January 1, the draw shall open on signal if at least a two-hour advance notice is given by calling the number posted at the bridge.

* * * * *

Dated: December 3, 2004.

David P. Pekoske,

Rear Admiral, U.S. Coast Guard, Commander, First Coast Guard District.

[FR Doc. 04–27472 Filed 12–14–04; 8:45 am]

BILLING CODE 4910–15–P

ENVIRONMENTAL PROTECTION AGENCY

40 CFR Part 63

[R06–OAR–2004–LA–0001; FRL–7847–7]

Approval of the Clean Air Act Section 112(l) Program for Hazardous Air Pollutants and Delegation of Authority to the State of Louisiana

AGENCY: Environmental Protection Agency (EPA).

ACTION: Proposed rule.

SUMMARY: The Louisiana Department of Environmental Quality (LDEQ) has submitted a request for receiving delegation of EPA authority for implementation and enforcement of National Emission Standards for Hazardous Air Pollutants (NESHAPs) for all sources (both part 70 and non-part 70 sources). The requests apply to certain NESHAPs promulgated by EPA, as incorporated by reference by LDEQ (40 CFR part 63 standards) as of July 1, 2003. The delegation of authority under this notice does not apply to sources located in Indian Country. EPA is providing notice that it approved by letter the delegation of certain NESHAPs to LDEQ on October 18, 2004, and is amending LDEQ's delegation of authority by adding additional part 63 subparts to the delegation.

DATES: Written comments must be received on or before January 14, 2005.

ADDRESSES: Comments may be mailed to Mr. Jeff Robinson, Air Permits Section (6PD–R), Environmental Protection Agency, 1445 Ross Avenue, Suite 1200, Dallas, Texas 75202–2733. Comments may also be submitted electronically or through hand delivery/courier by following the detailed instructions in the Addresses section of the direct final rule located in the final rules section of the **Federal Register**.

FOR FURTHER INFORMATION CONTACT: Mr. Jeff Robinson, Air Permits Section, Multimedia Planning and Permitting Division (6PD–R), U.S. Environmental Protection Agency, Region 6, 1445 Ross Avenue, Suite 700, Dallas, Texas 75202–2733, at (214) 665–6435, or at *robinson.jeffrey@epa.gov.*

SUPPLEMENTARY INFORMATION: In the final rules section of this **Federal Register**, EPA is approving LDEQ's request for delegation of authority to implement and enforce certain NESHAPs for all sources (both Part 70 and non-Part 70 sources). LDEQ has adopted certain NESHAPs into Louisiana's state regulations. In addition, EPA is waiving its notification requirements so sources will only need to send notifications and reports to LDEQ.

The EPA is taking direct final action without prior proposal because EPA views this as a noncontroversial action and anticipates no adverse comments. A detailed rationale for this approval is set forth in the preamble to the direct final rule. If no adverse comments are received in response to this action rule, no further activity is contemplated. If EPA receives adverse comments, the direct final rule will be withdrawn, and all public comments received will be addressed in a subsequent final rule based on this proposed rule. EPA will not institute a second comment period on this action. Any parties interested in commenting must do so at this time. Please note that if EPA receives adverse comment on an amendment, paragraph, or section of this rule and if that

provision may be severed from the remainder of the rule, EPA may adopt as final those provisions of the rule that are not the subject of an adverse comment. For additional information, see the direct final rule which is published in the Rules section of this **Federal Register**.

Authority: 42 U.S.C. 7412.

Dated: November 24, 2004.

Richard E. Greene,

Regional Administrator, Region 6.

[FR Doc. 04–27362 Filed 12–14–04; 8:45 am]

BILLING CODE 6560–50–P

FEDERAL COMMUNICATIONS COMMISSION

47 CFR Part 73

[DA 04–3812; MB Docket No. 04–427, RM–11127]

Radio Broadcasting Services; Ammon, ID

AGENCY: Federal Communications Commission.

ACTION: Proposed rule.

SUMMARY: This document seeks comment on a petition for rulemaking filed by Justin Robinson Union proposing the allotment of Channel 283A at Ammon, Idaho as the community's first local aural transmission service. Channel 283A can be allotted at a site 3.5 kilometers (2.2 miles) southwest of the community at coordinates 43–27–00 NL and 112–00–00 WL.

DATES: Comments or counterproposals must be filed on or before January 24, 2005, and reply comments must be filed on or before February 8, 2005.

ADDRESSES: Secretary, Federal Communications Commission, 445 12th Street, SW., Room TW–A325, Washington, DC 20554. In addition to filing comments with the FCC, interested parties should serve the petitioner's counsel, as follows: Dennis F. Begley, Esq., Reddy, Begley & McCormick, LLP, 2175 K Street, NW., Suite 350 Washington, DC 20037–1845.

FOR FURTHER INFORMATION CONTACT: Victoria M. McCauley, Media Bureau, (202) 418–2180.

SUPPLEMENTARY INFORMATION: This is a summary of the Commission's *Notice of Proposed Rulemaking,* MB Docket No. 04–427, adopted December 1, 2004, and released December 3, 2004. The full text of this Commission decision is available for inspection and copying during normal business hours in the Commission's Reference Center 445 Twelfth Street, SW., Washington, DC 20554. The complete text of this decision may also be purchased from the Commission's duplicating contractor, Best Copy and Printing, Inc., 445 12th Street, SW., Room CY–B402, Washington, DC 20054, telephone 800–378–3160 or *http://www.BCPIWEB.com.*

The provisions of the Regulatory Flexibility Act of 1980 do not apply to this proceeding.

Members of the public should note that from the time a *Notice of Proposed Rulemaking* is issued until the matter is no longer subject to Commission consideration or court review, all *ex parte* contacts are prohibited in Commission proceedings, such as this one, which involve channel allotments. *See* 47 CFR 1.1204(b) for rules governing permissible *ex parte* contacts.

For information regarding proper filing procedures for comments, *see* 47 CFR 1.415 and 1.420.

List of Subjects in 47 CFR Part 73

Radio, Radio broadcasting.

For the reasons discussed in the preamble, the Federal Communications Commission proposes to amend 47 CFR part 73 as follows:

PART 73—RADIO BROADCAST SERVICES

1. The authority citation for part 73 continues to read as follows:

Authority: 47 U.S.C. 154, 303, 334, and 336.

§ 73.202 [Amended]

2. Section 73.202(b), the Table of FM Allotments under Idaho, is amended by adding Ammon, Channel 283A.

Federal Communications Commission.

John A. Karousos,

Assistant Chief, Audio Division, Media Bureau.

[FR Doc. 04–27448 Filed 12–14–04; 8:45 am]

BILLING CODE 6712–01–P

FEDERAL COMMUNICATIONS COMMISSION

47 CFR Part 73

[DA 04–3813; MB Docket No. 04–428, RM–11124]

Radio Broadcasting Services; Clatskanie, OR; Ilwaco and Long Beach, WA

AGENCY: Federal Communications Commission.

ACTION: Proposed rule.

SUMMARY: This document requests comments on a petition filed by Portmeirion Partners (''Petitioner'') proposing the allotment of Channel 225C3 at Clatskanie, Oregon, as the community's first local service. Channel 225C3 can be allotted to Clatskanie, consistent with the minimum distance separation requirements of the Commission's rules at a restricted site located 21.5 kilometers (13.3 miles) north of the community. The reference coordinates for Channel 225C3 at Clatskanie are 46–17–44 North Latitude and 123–14–13 West Longitude. Additionally, to accommodate the proposed allotment of Channel 225C3 at Clatskanie, Petitioner requests the substitution of Channel 259A for Channel 224A at Long Beach, California, and modification of the license for Station KAQX(FM) at its current transmitter site. An *Order to Show Cause* is issued to New Northwest Broadcasters, LLC, licensee of Station KAQX(FM), as requested. To accommodate the substitution at Long Beach, Petitioner also proposes the substitution of Channel 253A for Channel 259A at Ilwaco, Washington at its current reference coordinates.

DATES: Comments must be filed on or before January 24, 2005, and reply comments on or before February 8, 2005.

ADDRESSES: Federal Communications Commission, 445 Twelfth Street, SW., Washington, DC 20554. In addition to filing comments with the FCC, interested parties should serve the Petitioner's counsel, as follows: John J. McVeigh, Esq., 12101 Blue Paper Trail, Columbia, MD 21044–2787.

FOR FURTHER INFORMATION CONTACT: Helen McLean, Media Bureau, (202) 418–2738.

SUPPLEMENTARY INFORMATION: This is a summary of the Commission's *Notice of Proposed Rulemaking*, MB Docket No. 04–428, adopted December 1, 2004, and released December 3, 2004. The full text of this Commission decision is available for inspection and copying during normal business hours in the Commission's Reference Center 445 Twelfth Street, SW., Washington, DC 20554. This document may also be purchased from the Commission's duplicating contractors, Best Copy and Printing, Inc., 445 12th Street, SW., Room CY–B402, Washington, DC 20554, telephone 1–800–378–3160 or *http://www.BCPIWEB.com.*

Provisions of the Regulatory Flexibility Act of 1980 do not apply to this proceeding.

Members of the public should note that from the time a Notice of Proposed Rule Making is issued until the matter is no longer subject to Commission

consideration or court review, all *ex parte* contacts are prohibited in Commission proceedings, such as this one, which involve channel allotments. *See* 47 CFR 1.1204(b) for rules governing permissible *ex parte* contact.

For information regarding proper filing procedures for comments, *see* 47 CFR 1.415 and 1.420.

List of Subjects in 47 CFR Part 73

Radio, Radio broadcasting.

For the reasons discussed in the preamble, the Federal Communications Commission proposes to amend 47 CFR part 73 as follows:

PART 73—RADIO BROADCAST SERVICES

1. The authority citation for part 73 continues to read as follows:

Authority: 47 U.S.C. 154, 303, 334 and 336.

§ 73.202 [Amended]

2. Section 73.202(b), the Table of FM Allotments under Oregon, is amended by adding Clatskanie, Channel 225C3.

3. Section 73.202(b), the Table of FM Allotments under Washington, is amended removing Channel 224A and by adding Channel 259A at Long Beach and by removing Channel 259A and by adding Channel 253A at Ilwaco.

Federal Communications Commission.

John A. Karousos,

Assistant Chief, Audio Division, Media Bureau.

[FR Doc. 04–27447 Filed 12–14–04; 8:45 am]

BILLING CODE 6712–01–P

FEDERAL COMMUNICATIONS COMMISSION

47 CFR Part 73

[DA 04–3615, MB Docket No. 04–420, RM–11119]

Radio Broadcasting Services; Corydon and Morganfield, KY

AGENCY: Federal Communications Commission.

ACTION: Proposed rule.

SUMMARY: This document seeks comment on a petition for rulemaking filed by Union County Broadcasting Co., Inc., licensee of Station WMSK–FM, Morganfield, Kentucky proposing the substitution of Channel 237C3 for Channel 237A at Morganfield and the reallotment of Channel 237C3 from Morganfield to Corydon, Kentucky, as the community's first local transmission service, and the modification of the license for Station WMSK–FM to reflect the changes. Channel 237C3 has been proposed to be reallotted at Corydon at petitioner's proposed site 11.1 kilometers (6.9 miles) southwest of the community at coordinates 37–41–31 NL and 87–48–45 WL.

DATES: Comments or counterproposals must be filed on or before January 18, 2005, and reply comments must be filed on or before February 1, 2005.

ADDRESSES: Secretary, Federal Communications Commission, 445 12th Street, SW., Room TW–A325, Washington, DC 20554. In addition to filing comments with the FCC, interested parties should serve the petitioner's counsel, as follows: John F. Garziglia, Esq. and Howard J. Barr, Esq., Womble Carlyle Sandridge & Rice, PLLC; 1401 Eye Street, NW., Seventh Floor; Washington, DC 20005.

FOR FURTHER INFORMATION CONTACT: Victoria M. McCauley, Media Bureau, (202) 418–2180.

SUPPLEMENTARY INFORMATION: This is a summary of the Commission's *Notice of Proposed Rulemaking*, MB Docket No. 04–420, adopted November 24, 2004, and released November 26, 2004. The full text of this Commission decision is available for inspection and copying during normal business hours in the Commission's Reference Center 445 Twelfth Street, SW., Washington, DC 20554. The complete text of this decision may also be purchased from the Commission's duplicating contractor, Best Copy and Printing, Inc., 445 12th Street, SW., Room CY–B402, Washington, DC 20054, telephone 800–378–3160 or *http://www.BCPIWEB.com.*

The provisions of the Regulatory Flexibility Act of 1980 do not apply to this proceeding.

Members of the public should note that from the time a *Notice of Proposed Rulemaking* is issued until the matter is no longer subject to Commission consideration or court review, all *ex parte* contacts are prohibited in Commission proceedings, such as this one, which involve channel allotments. *See* 47 CFR 1.1204(b) for rules governing permissible *ex parte* contacts.

For information regarding proper filing procedures for comments, *see* 47 CFR 1.415 and 1.420.

List of Subjects in 47 CFR Part 73

Radio, Radio broadcasting.

For the reasons discussed in the preamble, the Federal Communications Commission proposes to amend 47 CFR part 73 as follows:

PART 73—RADIO BROADCAST SERVICES

1. The authority citation for part 73 continues to read as follows:

Authority: 47 U.S.C. 154, 303, 334, and 336.

§ 73.202 [Amended]

2. Section 73.202(b), the Table of FM Allotments under Kentucky, is amended by removing Morganfield, Channel 237A and adding Corydon, Channel 237C3.

Federal Communications Commission.

John A. Karousos,

Assistant Chief, Audio Division, Media Bureau.

[FR Doc. 04–27445 Filed 12–14–04; 8:45 am]

BILLING CODE 6712–01–P

DEPARTMENT OF ENERGY

48 CFR Parts 901 and 970

RIN 1991–AB64

Acquisition Regulation: Make-or-Buy Plans

AGENCY: Department of Energy.

ACTION: Notice of proposed rulemaking.

SUMMARY: The Department of Energy (DOE) is proposing to amend the Department of Energy Acquisition Regulation (DEAR) to revise its requirements for contractor make-or-buy plans. The make-or-buy program, as it is currently structured, is not delivering the value to the Department commensurate with the costs of its implementation. The proposed rule would eliminate the burden of make-or-buy analysis.

DATES: Written comments on the proposed rulemaking must be received on or before close of business January 14, 2005.

ADDRESSES: This proposed rule is available and comments may be submitted on line at *http://www.regulations.gov.* Comments may be submitted electronically to *Irma.Brown@hq.doe.gov.* Comments may be mailed to U.S. Department of Energy, Attn: Irma Brown, Mail Code ME–62, 1000 Independence Avenue, SW., Washington, DC 20585.

FOR FURTHER INFORMATION CONTACT: Irma Brown at (202) 586–8455 or *Irma.Brown@hq.doe.gov.*

SUPPLEMENTARY INFORMATION:

I. Background.
II. Section-by-Section Analysis.
III. Procedural Requirements.
A. Review Under Executive Order 12866.
B. Review Under Executive Order 12988.
C. Review Under the Regulatory Flexibility Act.
D. Review Under the Paperwork Reduction Act.
E. Review Under the National Environmental Policy Act.

F. Review Under Executive Order 13132.
G. Review Under the Unfunded Mandates Reform Act of 1995.
H. Review Under the Treasury and General Government Appropriations Act, 1999.
I. Review Under Executive Order 13211.
J. Review Under the Treasury and General Government Appropriations Act, 2001.
K. Approval by the Office of the Secretary of Energy.

I. Background

In response to a report entitled *Making Contracting Work Better and Cost Less, Report of the Contract Reform Team,* DOE/S–0107, February 1994, DOE promulgated a rule that established a make-or-buy policy on June 27, 1997 (62 FR 34842). The make-or-buy policy established criteria to assist management and operating (M&O) contractors in categorizing all internal work activities under their contracts as ''make'' or ''buy'' activities. ''Make'' activities are core competencies critical to the mission success that are not available for outsourcing. ''Buy'' activities are non-core work activities that provide strategic support to core competencies that are available for outsourcing. Contractors use their make-or-buy plan to evaluate subcontracting opportunities and improve in-house performance. The objective of the make-or-buy policy is to require M&O contractors to operate the Department's laboratories, weapons production plants, and other facilities in a most cost effective and efficient manner.

DOE now has more than six years of experience with the make-or-buy policy. All M&O contractors have approved make-or-buy plans in place. The Department has evaluated the operation of the make-or-buy policy and the effect that policy has had in achieving the Department's objectives. As discussed in the following paragraphs, the make-or-buy program is not delivering the value to the Department commensurate with the costs of its implementation.

DOE conducted several assessments and implemented a number of actions to improve the manner in which DOE and its contractors implemented the make-or-buy plan requirements. Beginning in April 1998, DOE conducted its initial assessment to determine whether the requirements of make-or-buy were being implemented. The assessment examined whether: (1) The make-or-buy clause had been incorporated into the contract; (2) the contractor had prepared and submitted a make-or-buy plan; and (3) the plans were approved by the contracting officer. The results indicated that the implementation of the contractor make-or-buy plan requirements was on schedule. However, there were several issues noted in the early implementation of the make-or-buy plans: (1) The plans did not always meet the documentation requirements of the make-or-buy clause; (2) the make-or-buy plans did not always demonstrate the basic intent (*i.e.*, least cost alternative) of the make-or-buy requirements; and (3) roles and responsibilities of key individuals, including the contracting officer, were not clearly understood.

In August 1999, follow-up action was initiated to determine progress on the adequacy of the contractor make-or-buy plans and whether contracting officer approvals were obtained. The results indicated a number of contractors had well-thought-out and elaborate processes for arriving at make-or-buy decisions and several contractors were implementing productivity improvements for work areas retained under ''make'' decisions. There were a number of examples where the contractors had approved make-or-buy plans in place; however, contractor analysis of all work activities under the contract were not always accomplished. Overall, implementation across the DOE complex had been inconsistent largely because of a general misunderstanding of the make-or-buy policy and its attendant administration requirements. Additionally, the assessment questioned whether the DOE requirements for contractor's make-or-buy plans are overly stringent, unrealistic and inappropriate, thereby creating an impossible standard of performance.

DOE implemented a number of corrective actions to promote a better understanding of the make-or-buy requirements: (1) In December 1999, the M&O contractors conducted benchmarking studies of contractor make-or-buy plans and procedures to develop a decision model and a sample make-or-buy plan to be used by the M&O contractors; (2) in February 2000, program specific make-or-buy criteria were issued to the M&O contractors to assist in identifying core and non-core activities; (3) in July 2001, a workshop was conducted with federal and contractor staff to discuss and promote an understanding of the make-or-buy requirements and to identify potential problem areas where policy and procedural improvements could be made, and (4) in August 2001 assessment compliance criteria were developed and implemented by the Department to assist in the oversight of contractor make-or-buy plans.

The July 2001 workshop had a large attendance of both contractors and federal staff from the offices responsible for implementing the make-or-buy program. Discussions were held on what was working and what was not. The following problem areas were quickly identified: (1) An inconsistent approach by the M&O contractors in categorizing work activities; (2) the DOE complex was relatively inexperienced in conducting actual make-or-buy analyses; and (3) the costs to conduct make-or-buy analyses were a major consideration in determining how many would be done annually (in most cases the time estimated to complete the make-or-buy analyses on the available ''buy'' inventory extended beyond the expiration date of the contract). There were minor comments made for improving the existing policies and procedures, however, it was determined that these changes would have made minimal impact in increasing the value of the make-or-buy program.

By June 2002, the Department began considering whether to discontinue the make-or-buy program. But before moving in that direction, the Department conducted a random sampling of four contractors' make-or-buy plans. The results indicated that, based on contractor inventories ranging from approximately 46 to 119 eligible ''buy'' functions, M&O contractors were conducting 4% or 2–5 make-or-buy decisions per year for eligible ''buy'' functions, which is far less than the anticipated 20% or approximately 9–24 make-or-buy decisions per year. In most cases, the rationale for the low number of actions per year was the significant costs and time required to conduct comprehensive analyses on each make-or-buy decision. In one case, the costs associated with the process were determined to be extremely high relative to the potential benefits (2,149 hours of mostly senior level management and professionals) only to make the decision to keep the function in-house based on a variety of appropriate factors.

The conclusion drawn from these assessments is that there is little evidence that these plans are producing the efficiencies and cost savings anticipated by the Department. The Department has determined that the lack of measurable progress, costs of complying, and additional workload to monitor compliance with the make-or-buy policy outweigh any potential benefits to the Department.

Although the results of the Department's evaluation of the make-or-buy policy are a rationale for revising the Department's policy, another consideration for revising the policy is the progress made in the Department's contractual environment since the Department's contract reform initiative in February 1994. Recognizing that there are multiple approaches to achieving

cost efficiencies and operational effectiveness under a contract, the Department has made great strides in its contract reform initiatives. For its major site and facility contracts, the Department significantly increased the use of Performance-Based Management Contracts, competing more than 31 contracts while extending only 15 (four contracts only for an interim period), increased subcontracting goals to as high as 60% in some contracts, reduced DOE sponsored Federally Funded Research and Development Center (FFRDC) contracts by 27%, and increased the use of alternative contract types, such as cost plus incentive fee, to drive both cost efficiencies and operational effectiveness in contractor performance.

In consideration of the foregoing, the Department proposes to amend its Acquisition Regulation to eliminate the requirement that M&O contractors prepare and maintain formal make-or-buy plans.

The Department proposes to amend the clause at 970.5203–1 entitled ''Management Controls'' and the clause at 970.5203–2 entitled ''Performance Improvement and Collaboration'' by adding a requirement in both clauses for contractors to consider outsourcing as a mechanism to introduce improvements in the management of the contract. Outsourcing would be one of many options available for improving the contractor's cost effectiveness and performance.

In addition, the Department is proposing to amend the clause entitled Contractor Purchasing System by removing and reserving paragraph (n) entitled ''Make-or-Buy Plans.''

II. Section-by-Section Analysis

The Department proposes to amend the DEAR as follows.

1. Sections 901.105 would be amended to delete the reference to the Office of Management and Budget, OMB, number for make-or-buy plans.

2. Section 970.1504–4–1 through 970.1504–4–3 would be eliminated.

3. Section 970.1504–5(b) would be eliminated.

4. Section 970.5203–1 would be amended to provide outsourcing of functions for considerations of efficient and effective operations.

5. Section 970.5203–2 would be amended to provide a requirement for contractors to consider outsourcing as a mechanism to increase improvement in the management of the contract.

6. Section 970.5215–2 would be eliminated.

7. Section 970.5244–1 would be amended to remove and reserve paragraph (n).

III. Procedural Requirements

A. Review Under Executive Order 12866

This regulatory action has been determined not to be a significant regulatory action under Executive Order 12866, Regulatory Planning and Review, (58 FR 51735, October 4, 1993). Accordingly, this rule is not subject to review under the Executive Order by the Office of Information and Regulatory Affairs (OIRA) within the OMB.

B. Review Under Executive Order 12988

With respect to the review of existing regulations and the promulgation of new regulations, section 3(a) of Executive Order 12988, Civil Justice Reform, 61 FR 4729 (February 7, 1996), imposes on Executive agencies the general duty to adhere to the following requirements: (1) Eliminate drafting errors and ambiguity; (2) write regulations to minimize litigation; and (3) provide a clear legal standard for affected conduct rather than a general standard and promote simplification and burden reduction. With regard to the review required by section 3(a), section 3(b) of Executive Order 12988 specifically requires that Executive agencies make every reasonable effort to ensure that the regulation: (1) Clearly specifies the preemptive effect, if any; (2) clearly specifies any effect on existing Federal law or regulation; (3) provides a clear legal standard for affected conduct while promoting simplification and burden reduction; (4) specifies the retroactive effect, if any; (5) adequately defines key terms; and (6) addresses other important issues affecting clarity and general draftsmanship under any guidelines issued by the Attorney General. Section 3(c) of Executive Order 12988 requires Executive agencies to review regulations in light of applicable standards in section 3(a) and section 3(b) to determine whether they are met or it is unreasonable to meet one or more of them. DOE has completed the required review and determined that, to the extent permitted by law, these regulations meet the relevant standards of Executive Order 12988.

C. Review Under the Regulatory Flexibility Act

This proposed rule has been reviewed under the Regulatory Flexibility Act, 5 U.S.C. 601 *et seq.*, which requires preparation of an initial regulatory flexibility analysis for any rule that must be proposed for public comment and that is likely to have a significant economic impact on a substantial number of small entities. The proposed rule would not have a significant economic impact on small entities because no small entities are DOE M&O contractors and because the rule would eliminate the existing burden of preparing make-or-buy analyses.

Accordingly, DOE certifies that this proposed rule would not have a significant economic impact on a substantial number of small entities, and, therefore, no regulatory flexibility analysis has been prepared.

D. Review Under Paperwork Reduction Act

Information collection or recordkeeping requirements contained in this rulemaking have been previously cleared under OMB paperwork clearance package number 1910–5102. The existing burden will be removed by this rulemaking.

E. Review Under the National Environmental Policy Act

DOE has concluded that promulgation of this proposed rule falls into a class of actions which would not individually or cumulatively have significant impact on the human environment, as determined by DOE's regulations (10 CFR Part 1021, Subpart D) implementing the National Environmental Policy Act (NEPA) of 1969 (42 U.S.C. 4321 *et seq.*). Specifically, this proposed rule is categorically excluded from NEPA review because the amendments to the DEAR would be strictly procedural (categorical exclusion A6). Therefore, this proposed rule does not require an environmental impact statement or environmental assessment pursuant to NEPA.

F. Review Under Executive Order 13132

Executive Order 13132 (64 FR 43255, August 4, 1999) imposes certain requirements on agencies formulating and implementing policies or regulations that preempt State law or that have federalism implications. Agencies are required to examine the constitutional and statutory authority supporting any action that would limit the policymaking discretion of the States and carefully assess the necessity for such actions. DOE has examined today's rule and has determined that it does not preempt State law and does not have a substantial direct effect on the States, on the relationship between the national government and the States, or on the distribution of power and responsibilities among the various levels of government. No further action is required by Executive Order 13132.

G. Review Under the Unfunded Mandates Reform Act of 1995

The Unfunded Mandates Reform Act of 1995 (Pub. L. 104–4) requires a Federal agency to perform a detailed assessment of costs and benefits of any rule imposing a Federal Mandate with costs to State, local or tribal governments, or to the private sector, of $100 million or more in any single year. This rulemaking does not impose a Federal mandate on State, local or tribal governments or on the private sector.

H. Review Under the Treasury and General Government Appropriations Act, 1999

Section 654 of the Treasury and General Government Appropriations Act, 1999 (Pub. L. 105–277), requires Federal agencies to issue a Family Policymaking Assessment for any rule or policy that may affect family well-being. This rule will have no impact on family well being.

I. Review Under Executive Order 13211

Executive Order 13211, Actions Concerning Regulations That Significantly Affect Energy Supply, Distribution, or Use, (66 FR 28355, May 22, 2001) requires Federal agencies to prepare and submit to the OIRA, Office of Management and Budget, a Statement of Energy Effects for any significant energy action. A ''significant energy action'' is defined as any action by an agency that promulgates or is expected to lead to promulgation of a final rule, and that: (1) Is a significant regulatory action under Executive Order 12866, or any successor order; and (2) is likely to have a significant adverse effect on the supply, distribution, or use of energy, or (3) is designated by the Administrator of OIRA as a significant energy action. For any significant energy action, the agency must give a detailed statement of any adverse effects on energy supply, distribution, or use should the proposal be implemented, and of reasonable alternatives to the action and their expected benefits on energy supply, distribution, and use.

Today's rule is not a significant energy action. Accordingly, DOE has not prepared a Statement of Energy Effects.

J. Review Under the Treasury and General Government Appropriations Act, 2001

The Treasury and General Government Appropriations Act, 2001, 44 U.S.C. 3516, note, provides for agencies to review most disseminations of information to the public under implementing guidelines established by each agency pursuant to general guidelines issued by OMB. OMB's guidelines were published at 67 FR 8452 (February 22, 2002), and DOE's guidelines were published at 67 FR 62446 (October 7, 2002). DOE has reviewed today's notice under the OMB and DOE guidelines and has concluded that it is consistent with applicable policies in those guidelines.

K. Approval by the Office of the Secretary of Energy

The Office of the Secretary of Energy has approved issuance of this proposed rule.

List of Subjects in 48 CFR Parts 901 and 970

Government procurement.

Issued in Washington, DC, on December 8, 2004.

Richard H. Hopf,

Director, Office of Procurement and Assistance Management, Office of Management, Budget and Evaluation, Department of Energy.

Robert C. Braden, Jr.,

Director, Office of Acquisition and Supply Management, National Nuclear Security Administration.

For the reasons set out in the preamble, DOE proposes to amend Chapter 9 of Title 48 of the Code of Federal Regulations as set forth below:

1. The authority citation for part 901 is revised to read as follows:

Authority: 42 U.S.C. 2201; 2282a; 2282b; 2282c; 42 U.S.C. 7101, et. seq.; 41 U.S.C. 418b; 50 U.S.C. 2401, et seq.

PART 901—FEDERAL ACQUISITION REGULATIONS SYSTEM

2. Section 901.105 is amended by revising the second sentence to read as follows:

901.105 OMB control numbers.

* * * The OMB control number for the collection of information under 48 CFR chapter 9 is 1910–4100 except for Reporting and Recordkeeping Requirements for Safety Management (see 48 CFR 970.5223–1) which is 1910–5103.

3. The authority citation for part 970 continues to read as follows:

Authority: 42 U.S.C. 2201; 2282a; 2282b; 2282c; 42 U.S.C. 7101, et. seq.; 41 U.S.C. 418b; 50 U.S.C. 2401, et seq.

PART 970—DOE MANAGEMENT AND OPERATING CONTRACTS

970.1504–4–1–970.1504–4–3 [Removed and Reserved]

4. Sections 970.1504–4–1 through 970.1504–4–3 are removed and reserved.

970.1504–5 [Amended]

5. Section 970.1504–5 is amended by removing paragraph (b), and redesignating paragraphs (c), (d) and (e) as paragraphs (b), (c) and (d) respectively.

970.5203–1 [Amended]

6. Section 970.5203–1 is amended by revising the clause date to read [Date (Month and Year) 30 days following the date of publication of the final rule in the **Federal Register**] and by adding in paragraph (a)(1), second sentence, the words ''including consideration of outsourcing of functions'' after the word ''promoted''.

970.5203–2 [Amended]

7. Section 970.5203–2, is amended by revising the clause date to read [Date (Month and Year) 30 days following the date of publication of the final rule in the **Federal Register**] and by adding in paragraph (a), last sentence, the words ''outsourcing decisions,'' after the words ''changes in organization.''

970.5215–2 [Removed and Reserved]

8. Section 970.5215–2, Make-or-Buy plan, is removed and reserved.

9. Section 970.5244–1 is amended by revising the clause date and by removing and reserving paragraph (n) to read as follows:

970.5244–1 Contractor purchasing system.

* * *

Contractor Purchasing System

[Date (Month and Year) 30 days following date of publication of the final rule in the **Federal Register**]

* * * * *

(n) [Removed and Reserved].

* * * * *

[FR Doc. 04–27417 Filed 12–14–04; 8:45 am]

BILLING CODE 6450–01–P

DEPARTMENT OF TRANSPORTATION

National Highway Traffic Safety Administration

49 CFR Part 571

[Docket No. NHTSA–2004–19840]

RIN 2127–AH34

Federal Motor Vehicle Safety Standards; Door Locks and Door Retention Components and Side Impact Protection

AGENCY: National Highway Traffic Safety Administration, Department of Transportation.

ACTION: Notice of proposed rulemaking (NPRM).

SUMMARY: We are proposing to amend Federal Motor Vehicle Safety Standard (FMVSS) No. 206, *Door locks and door retention components*, in order to add and update requirements and test procedures and to harmonize with the world's first global technical regulation for motor vehicles. If adopted, today's proposal would add test requirements and test procedures for sliding doors, add secondary latched position requirements for doors other than hinged side doors and back doors, provide a new test procedure for assessing inertial forces, and extend the application of FMVSS No. 206 to buses with a Gross Vehicle Weight Rating (GVWR) of less than 10,000 pounds, including 12–15 passenger vans.

DATES: *Comment closing date:* You should submit your comments early enough to ensure that Document Management receives them not later than February 14, 2005. *See* **SUPPLEMENTARY INFORMATION** section for proposed effective date.

ADDRESSES: For purposes of identification, please mention the docket number of this document in your comments. You may submit those comments by any of the following methods:

- Web Site: *http://dms.dot.gov.* Follow the instructions for submitting comments on the DOT electronic docket site.
- Fax: 1–202–493–2251.
- Mail: Docket Management Facility; U.S. Department of Transportation, 400 Seventh Street, SW., Nassif Building, Room PL–401, Washington, DC 20590–001.
- Hand Delivery: Room PL–401 on the plaza level of the Nassif Building, 400 Seventh Street, SW., Washington, DC, between 9 a.m. and 5 p.m., Monday through Friday, except Federal Holidays.
- Federal eRulemaking Portal: Go to *http://www.regulations.gov.* Follow the online instructions for submitting comments.

Instructions: All submissions must include the agency name and docket number or Regulatory Identification Number (RIN) for this rulemaking. For detailed instructions on submitting comments and additional information on the rulemaking process, see the Public Comments heading of the **SUPPLEMENTARY INFORMATION** section of this document. Note that all comments received will be posted without change to *http://dms.dot.gov*, including any personal information provided. Please see the discussion of the Privacy Act under the Public Comments section.

Docket: For access to the docket to read background documents or comments received, go to *http://dms.dot.gov* at any time or to Room PL–401 on the plaza level of the Nassif Building, 400 Seventh Street, SW., Washington, DC, between 9 a.m. and 5 p.m., Monday through Friday, except Federal Holidays.

FOR FURTHER INFORMATION CONTACT: *For technical issues:* Dr. George Mouchahoir, Chief Structures and Special Systems Division, Office of Crashworthiness Standards, National Highway Traffic Safety Administration, 400 Seventh Street, SW., Washington, DC 20590; telephone (202) 366–4919; telefax (202) 493–2739; *gmouchahoir@nhtsa.dot.gov.*

For legal issues: Mr. Christopher Calamita, Office of the Chief Counsel, National Highway Traffic Safety Administration, 400 Seventh Street, SW., Washington, DC 20590; telephone (202) 366–2992; telefax (202) 366–3820.

SUPPLEMENTARY INFORMATION: *Proposed effective date:* If adopted, the amendments proposed in this rulemaking action would become effective September 1, two years following the next model year after the date of publication of a final rule in the **Federal Register**. For example, if a final rule were adopted on December 1, 2005, the rule would be effective beginning September 1, 2008. Optional early compliance would be permitted on and after the date of publication of the final rule in the **Federal Register**.

Table of Contents

I. Executive Summary
II. Background
III. Current Requirements of FMVSS No. 206
IV. Scope of the Safety Problem
V. Harmonization Efforts
VI. Proposed Improvements to FMVSS No. 206
A. Hinged Door Issues
1. Load Tests
2. Inertial Test
3. Door Hinges
B. Side Sliding Door Issues
C. Door Locks
D. Applicability to Buses
E. Summary of Improvements
VII. Alternative Approaches to Testing Retention Components on Hinged Doors That Were Considered but Are Not Proposed
A. Hinged Side Door System Tests (Full Door Tests)
B. Combination Component Test
VIII. Door Closure and Operability Requirements
IX. Costs, Benefits, and the Proposed Effective Date
X. Differences Between the GTR and the NPRM
XI. Effective Date
XII. Regulatory Analysis and Notices
XIII. Public Comments

I. Executive Summary

Currently, door lock systems and door retention components on passenger cars, trucks, and multipurpose passenger vehicles must comply with a series of requirements established in FMVSS No. 206 in the early 1970s in order to minimize the ejections of occupants through side door openings. In 1995, these requirements were expanded to address back doors. While these requirements have significantly improved door performance over the level of pre-standard doors, occupants continue to be ejected through doors.

Given the sources and magnitude of the overall safety problem posed by ejections from vehicles, the agency intends to address the problem comprehensively, focusing on ejections through glazing as well as ejections through doors. Ejections through glazing (*i.e.*, ejections through a vehicle window) comprise 59 percent of all ejections and the data show that the greatest potential ejection mitigation benefits will come from reducing these ejections.[1] To address ejections through glazing, the agency has a multi-phase approach. The first phase is an upgrade to FMVSS No. 214, *Side impact protection*, which would likely induce vehicle manufacturers to use side curtains as a countermeasure. A proposal for that upgrade was issued earlier this year. In the next phase, we plan to propose occupant containment requirements for those side curtains in non-rollover crashes. Additional phases could include a study of the benefits of rollover sensors that would deploy the curtains when they sense an impending rollover.

Ejections through openings other than side glazing and doors, such as windshields, open convertible tops, and open truck beds comprise 26% of the ejections. It is hard for NHTSA to evaluate countermeasures designed to reduce ejections through these various paths, since the paths are through openings that are not on all vehicles, thus making it harder to obtain data. Further, there are not any potential countermeasures for the vehicles that have these openings. The remaining ejections are ejections through doors, which constitute the other 15 percent of the ejection problem, and are the focus of this proposal.

Crashes such as offset frontals, near side impacts, and especially rollovers,

[1] The scope of the safety problem is described in greater detail in section IV of this notice.

which pose the greatest risk of ejection for occupants, may lead to complex loading conditions to the vehicle door structure. In recognition of this, the agency tried to develop a new combination test that would subject the door latch components to simultaneously applied loads from different directions as occurs in rollover and other crashes in order to reduce related door ejections. We also wanted to update the existing requirements and test procedures established to ensure the strength of individual latch components for load conditions that are less complex, such as those that occur in many non-rollover collisions.

The agency's efforts to improve the requirements and test procedures of FMVSS 206 in order to address door ejections coincided with the adoption of the initial Program of Work under the 1998 Global Agreement.[2] That program includes door lock and door retention systems as one of the promising areas for the establishment of a global technical regulation (GTR). The agency sought to work collaboratively on door ejections with other contracting parties to the 1998 Global Agreement, particularly the European Union and Japan. Through the exchange of information on ongoing research and testing and through the leveraging of resources for testing and evaluations, the agency led successful efforts that culminated in the establishment of the first GTR under the 1998 Agreement. We believe that the provisions of the GTR, if adopted at the domestic level, would improve the current requirements and test procedures of FMVSS 206 and improve the door retention regulations of other countries.

The U.S., as a Contracting Party of the 1998 Global Agreement that voted in favor of establishing this GTR at the November 18, 2004 Session of the Executive Committee, is obligated under the Agreement to initiate the process for adopting the provisions of the GTR.[3] This proposal is closely based on the GTR.

NHTSA had anticipated that the GTR and this proposal would address both rollover related door ejections as well as non-rollover related door ejections. The problem of rollover related door ejections is significantly greater in the United States than in other countries. This is primarily due to the fact that light trucks, vans, and sport utility vehicles, which have a greater propensity for rollover than passenger cars, together comprise a larger portion of the U.S. vehicle fleet than they do of the vehicle fleets in other countries. Differences in safety belt use rates also play a role. Thus, other countries have not focused on developing and issuing regulations designed to prevent ejections through the door in rollover crashes. Nevertheless, the world community was willing to investigate ways to address complex loading conditions, as occur in rollover related door ejections. Specifically, countries participating in the development of the GTR helped to evaluate the new combination test procedure, which is intended to replicate the application of forces in the real world and in part address the rollover related door ejections. However, difficulties were encountered with following the test procedure due to the inability to conduct the test on some types of latches, thus rendering the procedure unusable. Our inability to proceed at this time with a combination test limited our focus in this rulemaking on improving non-rollover door ejections. However, the agency expects continued efforts to develop an alternative procedure for complex loading conditions, and hopes to be able to propose a requirement and procedure in the future. The agency will also continue to study the overall problem of rollover related ejections under its comprehensive rollover plan and will address them accordingly.

Non-rollover door ejections are the type of door ejections that the GTR, this proposal and the regulations of other countries are seeking to prevent. Even though non-rollover door ejections occur at a lower rate than rollover door ejections, the non-rollover door ejections account for 59 percent of all door ejections.

This proposal, if made final, would improve the current FMVSS No. 206 requirements in several areas. First and foremost, with respect to sliding doors, given that the existing standard has a door-in-frame requirement to test sliding door retention strength, but does not provide a test procedure, it would replace the existing requirement with new requirements and an associated full vehicle test procedure. It would also require that sliding side doors either have a secondary latched position, which serves as a backup to the fully latched position and increases the likelihood that a striker will remain engaged with the latch when the door is incompletely closed, or a visual telltale signaling that the door is not fully closed. The fully latched and secondary latched positions would also be load tested and would be required to meet inertial requirements the same way as the latches on hinged doors. Second, it would require a secondary latched position for double-doors, currently referred to as ''cargo-doors.'' This requirement already exists in the European and Japanese regulations. Third, it would add a dynamic inertial test procedure to FMVSS No. 206 as an optional alternative to the current inertial calculation. Such a test procedure is more representative of the real world and has been conducted in Europe for type approval purposes. Fourth, it would add new requirements for rear-hinged side doors to prevent potential inadvertent openings while the vehicle is moving. Finally, it would extend the application of FMVSS No. 206 to buses with a Gross Vehicle Weight Rating (GVWR) of 4,536 kg (10,000 pounds) or less, including 12–15 passenger vans. This last requirement addresses a uniquely U.S. issue and thus is not included in the GTR.

With the improvements proposed in this notice to address non-rollover door ejections, we estimate that we would prevent 7 deaths and 4 serious injuries, annually. These benefits come primarily from the changes to the sliding door requirements and test procedure.

The total costs of these proposals are estimated to be slightly over $8 million. All of those costs are associated with adding a second latch to those sliding doors that do not currently have one. Adding a second latch is necessary in order for sliding doors to meet the existing sliding door requirements when tested according to the new sliding door test procedure. The door retention components would need only small changes, if any. Vans currently meet the proposed secondary latch position requirement for double doors. We do not anticipate that the proposed inertial load test would add significant cost on manufacturing operations, particularly given that it would be an optional alternative.

Vehicle manufacturers, and ultimately, consumers, both here and abroad, can expect to achieve cost savings through the formal harmonization of differing sets of standards when the contracting parties to the 1998 Global Agreement implement the new GTR. Further, adopting amendments based on the GTR will not only result in improvements to the FMVSS No. 206, but also to the door

[2] The 1998 Global Agreement was concluded under the auspices of the United Nations and provides for the establishment of globally harmonized vehicle regulations. This Agreement, whose conclusion was spearheaded by the United States, entered into force in 2000 and is administered by the UN Economic Commission for Europe's World Forum for the Harmonization of Vehicle Regulations (WP.29).

[3] While the Agreement obligates such contracting parties to begin their processes, it leaves the ultimate decision of whether to adopt the GTR into their domestic law to the parties themselves.

lock and door retention component regulation of the United Nations' Economic Commission for Europe (ECE R.11), which is used by the majority of the world community. In addition to the sliding door test procedure, the rear-hinged side door requirements, and the inertial test procedure that are discussed above, ECE R. 11, when amended per the GTR, will benefit from the inclusion of back door requirements and rear door locking requirements. To date, those requirements have been in place only in the U.S. and Canada.

II. Background

As originally conceived, FMVSS No. 206 was intended to reduce the likelihood of occupant deaths and injuries resulting from ejections through door openings by keeping vehicle doors closed in crashes. The opening of these doors was primarily due to structural failures in the latch, striker, or hinges. Sheet metal failures in the door structure or the B-pillar were rare. In crashes involving the opening of doors, the latch, striker, and hinges were subjected to tensile and compressive forces along the vehicle's longitudinal (forward-to-aft) and lateral (side-to-side) axes. These force directions could cause the latch or striker to fail under as little as 5,000 newtons (N) of force. Based on these findings, the automotive community concluded that the most effective means of reducing door openings would be through increasing the strength of the door retention components. In 1964, the Society of Automotive Engineers (SAE) developed and issued the first test procedures designed to address door retention components: SAE Recommended Practice J839, *Passenger Car Side Door Latch Systems* (SAE J839); and SAE Recommended Practice J934, *Vehicle Passenger Door Hinge Systems* (SAE J934).

As initially issued in the early 1970's, FMVSS No. 206 was based, in large part, on the SAE recommended practices in existence at that time, except that we increased the recommended test force requirement in the lateral direction.[4] Aside from the changes made in 1995 to address back door openings, no significant changes have been made to the current regulation since the early 1970's. While these regulations were proven to be largely effective in the 1970's, ejections due to door openings continue to account for 15 percent of all ejections.

III. Current Requirements of FMVSS No. 206

FMVSS No. 206 applies to all passenger cars, trucks and multipurpose passenger vehicles, regardless of their GVWR, and provides that certain door retention components on any door leading directly into an occupant compartment, *i.e.*, a compartment containing seating accommodations for one or more occupants, must comply with the requirements of the standard. The standard excludes folding doors, roll-up doors, doors that are designed to be easily attached to or removed from vehicles manufactured for operation without doors, and side doors that are equipped with wheelchair lifts and that are linked to either an audible or visible alarm system that is activated when the doors are open.[5]

Hinged side door requirements. The standard requires that each latch on hinged side doors have both a fully latched and a secondary latched position.[6] In this notice, a latch with both a fully latched and a secondary latched position will be referred to as a ''primary door latch.'' As currently required, a primary door latch and striker cannot separate when a longitudinal force of 11,000 N (2,500 lb) or a lateral force of 8,900 N (2,000 lb) is applied while the components are fully engaged.[7] Also, a primary door latch with a striker will be referred to as a primary door latch system. During testing, the longitudinal force is applied to the primary door latch system perpendicular to the latch face. For conventional door latch systems,[8] this force is applied parallel to the vehicle's longitudinal axis. The longitudinal test is designed to simulate door openings in which the striker is pulled away from the latch faceplate. The lateral force is applied in the direction in which the door opens. The lateral procedure is intended to simulate door openings in which the striker is pulled away from the latch in that direction. The standard also requires that the coupled latch and striker may not separate when a longitudinal or a lateral force of 4,450 N (1,000 lb) is applied to the primary door latch system while in its secondary closure position.

Further, a hinged side door latch must not disengage from the fully latched position when an inertial force of 30 g is applied to the latch system in either the vehicle's longitudinal or the lateral axes.[9] Latch systems are subjected to inertial loading when the vehicle comes to an abrupt stop. This type of loading has the potential to release the latch even though the door latch may be undamaged. FMVSS No. 206 provides that demonstration of compliance with this requirement is to be accomplished either by following an agency-approved test procedure or by completing a mathematical formula specified in SAE J839. While NHTSA approved an inertial loading test procedure submitted by General Motors (GM) in 1967, it has never adopted such a procedure into the standard and no other test procedures were approved.

The standard also requires each hinge system[10] to support the door, and not separate when separate longitudinal (11,000 N (2,500 lb)) and lateral (8,900 N (2,000 lb)) forces are applied to the system.

Hinged side cargo doors. With slight modifications, hinged side door requirements are specified for the latch and hinge systems on hinged side cargo doors. Cargo door latch systems need not currently have a secondary latching system. A ''cargo-type door'' is defined in the standard as ''a door designed primarily to accommodate cargo loading including, but not limited to, a two-part door that latches to itself,'' and is typically designed with two doors that attach to one another. Because of the design of these doors, cargo door systems typically have more than one door latch. The standard requires that latches on a single door jointly resist the force loading in the lateral direction.

Back doors. Back door latches are tested in three directions: (1) The

[4] The force was increased to reduce the number of door openings resulting from occupant impacts on the interior of the door. SAE responded by adopting the same lateral force requirement in SAE J839.

[5] Door retention components on side doors equipped with wheelchair lifts that are linked to either a visual or audible warning were excluded from the standard in 1985. 50 FR 12029 March 27, 1985.

[6] The fully latched position keeps the striker, which is typically attached to the vehicle structure, firmly coupled with the latch, which is typically incorporated into the door. The secondary latched position serves as a backup to the fully latched position, increasing the likelihood that the striker will remain engaged with the latch when the door is incompletely closed.

[7] The latch is designed with a cam that has two closure positions. When the latch is fully engaged or fully closed, the opening in the latch is at its furthest position away from the striker.

[8] A conventional door latch system is one that is located at the rear portion of the door opening, as opposed to a system that is located at the bottom of the door opening.

[9] Inertia is the property of matter that requires that a force be applied on a body to accelerate it. An inertial force is a force resulting from acceleration of mass and is calculated by multiplying the mass of a body by its acceleration. In this instance, the inertial force relates to the force produced by accelerating the mass of the latching system and its components to an acceleration of 30 g.

[10] A hinge system is a system of one or more hinges. Under the standard, all hinges on a single door can be tested together to meet the required load.

direction of door opening, (2) perpendicular to the latch face and (3) orthogonal to the first two directions. By referencing the direction of the test loads to the latch instead of the vehicle, it allows the appropriate test load to be applied despite differences in orientation for back door latches. Also, while back doors are required to have at least one primary door latch, they may have other latches that do not have both a fully and secondary latched position.

Sliding doors. Unlike the types of doors described above, sliding doors are regulated under the current standard as integrated systems. All sliding door retention components, including the door, track and slide combination, or other supporting means, may not separate when a total lateral force of 17,792 N (4,000 lb) is applied to the entire system with the door in the closed position. There is no requirement that the door have a primary door latch system, or even a latch system with only a fully latched position. Rather, the entire door, with its door retention components, is tested. While vehicle manufacturers are required to certify compliance to this requirement, NHTSA has not conducted compliance tests on sliding doors because the standard does not have a test procedure for these doors.

IV. Scope of the Safety Problem

Based on a review of NASS and FARS data from 1995–2003, there were 5,023,879 vehicle occupants involved in tow away vehicle crashes on an annual basis; 54,082 of those occupants were ejected from their vehicle. *See* Table 1. In ejections in which the route of ejection is known, 59 percent of ejections occur through side glazing and 26 percent of the ejections occur through openings other than side glazing or doors (*i.e.*, convertible tops, sunroofs, windshields, open truck beds). The remaining, 15 percent of ejections occurred through a vehicle door. The rate of ejections through doors is heavily dependent on belt use. Of the serious injuries and fatalities attributable to ejections through doors in the U.S., 94 percent involve unbelted occupants.

To address the ejections through side glazing, the agency has indicated that we will initiate rulemaking within the next couple of years to establish occupant containment performance requirements for side air bags and side curtains now being incorporated into the vehicle fleet for side impact occupant protection. Ejections through openings other than side glazing and doors, such as windshields, open convertible tops, and open truck beds comprise 26 percent of the ejections. It is hard for NHTSA to evaluate countermeasures designed to reduce ejections through these various paths, since the path is through openings that are not on all vehicles and potential countermeasures are not apparent for the particular vehicle classification and use.

TABLE 1.—TOTAL EJECTIONS: 1995–2003 NASS AND FARS OCCUPANTS IN TOWED LIGHT DUTY VEHICLE CRASHES ADJUSTED FOR FATALITY AND DAMAGE AREA ON AN ANNUAL BASIS

	Total occupants	Unejected	All ejection	Rate (percent)	Ejection with unknown routes	Ejection with known routes
All crashes	5,023,879	4,969,797	54,082	1.08	3,078	51,004
Rollovers	444,267	410,420	33,847	7.62	2,399	31,448
Non-rollovers	4,579,612	4,559,377	20,235	0.44	680	19,555

TABLE 2.—EJECTION ROUTES

	Door ejections	Rate 1* (percent)	Rate 2** (percent)	Side glazing ejections	Rate 1* (percent)	Rate 2** (percent)	Other ejections	Rate 1* (percent)	Rate 2** (percent)
All crashes	7,622	0.16	14.94	29,877	0.63	58.58	13,505	0.29	26.48
Rollovers	3,089	0.75	9.82	19,098	4.63	60.73	9,261	2.24	29.45
Non-rollovers	4,533	0.10	23.18	10,779	0.24	55.12	4,243	0.10	21.70

* Rate 1 = [Rate 2 for (Ejections for Door, Glazing, or Other Route)] * [Rate for All Ejections].
[*Example:* For all crashes, the rate for Door Ejection = 14.94%*1.08% = 0.16%].
** Rate 2 = [(Ejections for Door, Glazing, or Other) / (All Ejections–Unknown Ejection Routes)].
[*Example:* For all crashes, the rate for Door Ejection with respect to Ejection with Known Routes = 7,622/51,004 = 14.94%].

In further analyzing the door ejections, the agency found that of the 15 percent (7,622) vehicle ejections that occurred through a door, 4,533 ejections occurred in non-rollover crashes (*i.e.*, frontal, side, and rear impact crashes) verses 3,089 ejections in rollover crashes. *See* Table 2. However, the data indicate that rollover crashes have a higher rate of ejection than non-rollover crashes, and that the rate for ejection through a vehicle door is also higher for rollover crashes, as opposed to non-rollover crashes. For all crashes, the rate for ejection in rollover crashes is 7.62 percent, verses 0.44 percent for non-rollover crashes. *See* Table 1. The rate for ejection through a door in rollover crashes is 0.75 percent.[11] Conversely, the rate for ejection through a door in non-rollover crashes is 0.10 percent[12]. *See* Table 2. The agency tried to address complex loading conditions such as those which can occur in rollover related door ejections by developing a new combination test that would subject the door latch components to simultaneously applied loads from different directions.[13] Further discussion of this test and the reasons it was not adopted are discussed in section VII.

Door ejections, due to non-rollover door openings, account for 23 percent of the total non-rollover ejections with known routes. A portion of these ejections occurs through sliding door openings and from doors in 12–15

[11] [door ejections in rollovers (3,089) / all door ejections through known routes in rollovers (31,448)] * [rate for all ejections in rollovers (7.62%)]

[12] [door ejections in non-rollovers (4,533) / all door ejections through known routes in non-rollovers (19,555)] * [rate for all ejections in rollovers (7.62%)]

[13] Complex combination loadings also occur in other, non-rollover crashes, for which the combination test was also intended to apply.

passenger vans. Of those ejected through a sliding door, each year approximately 20 people are killed and 30 people are seriously injured, based on the 1995–2003 data from NASS. In fact, based on the 2003 sales data, about 85 percent of vans sold in the U.S. have sliding doors. Only 15 percent of vans sold have double doors. Additionally, we are concerned that the individuals with the greatest exposure to sliding door failures are children. Children sit in the back of vehicles in disproportionately high numbers.[14] We do not believe that this exposure is acceptable when measures can be taken to minimize the likelihood that a sliding door would open in a crash. Finally, with the increasing popularity of vehicles with sliding doors on both the driver and passenger side of the vehicle, we expect the number of overall sliding door failures to increase unless they are required to be designed in a way that reduces the likelihood of a door opening.

V. Harmonization Efforts

The agency's efforts to update the requirements and test procedures of FMVSS No. 206 in order to address these safety issues coincided with the adoption of the initial Program of Work of the 1998 Global Agreement. Globally, there are several existing regulations, directives, and standards that pertain to door lock and door retention components. As all share similarities, the international motor vehicle safety community tentatively determined that these components might be amenable to the development of a GTR under the 1998 Global Agreement (1998 Agreement). During the 126th session of WP.29 of March 2002, the Executive Committee of the 1998 Agreement adopted a Program of Work, which included the development of a GTR to address inadvertent door opening in crashes. The Executive Committee also charged the Working Party on Passive Safety (GRSP) to form an informal working group to discuss and evaluate relevant issues concerning requirements for door locks and door retention components and to make recommendations regarding a potential GTR.[15] The informal working group was established in September 2002.

The United States of America (U.S.) volunteered to lead the group's efforts and develop a document detailing the recommended requirements for the GTR. The U.S., through this agency, sought to work collaboratively on door ejections with other contracting parties to the 1998 Global Agreement, particularly the European Union and Japan. The U.S. presented a formal proposal to develop the GTR to the Executive Committee of the 1998 Agreement, which was adopted in June 2003 (TRANS/WP.29/2003/49, this document has been placed in the docket). The GRSP then drafted the door locks and door retention GTR. The draft GTR was discussed in full at the December 2003 and the May 2004 GRSP meetings.

In developing language for the draft GTR, the GRSP considered all relevant standards, regulations, and directives. An analysis was made to identify the differences in the application, requirements, and test procedures of the North American and UNECE Regulations (TRANS/WP.29/2003/49).

The following regulations, directives and international voluntary standards were considered in drafting the GTR:

- UN/ECE Regulation 11—Uniform provisions concerning the approval of vehicles with regard to door latches and door retention components.
- U.S. Federal Motor Vehicle Safety Standard No. 206, Door locks and door retention components. (FMVSS No. 206)
- EU Directive 70/387/EEC, concerning the doors of motor vehicles and their trailers.
- Canada Motor Vehicle Safety Regulation No. 206—Door locks and door retention components. (CMVSS No. 206). [**Note:** The North American regulations FMVSS and CMVSS No. 206 are substantially similar].
- Japan Safety regulation for Road Vehicle Article 25.
- Australian Design Rule 2/00—Side Door Latches and Hinges.
- SAE J839, September 1998—Passenger Car Side Door Latch Systems.
- SAE J934, September 1998—Vehicle Passenger Door Hinge Systems.

The only significant differences between the sets of standards were found in FMVSS No. 206 and UN/ECE Regulation 11 (ECE R11). This is because the U.S. and Canadian standards mirror each other, as do the ECE and Japanese regulations. The Australian regulation combines elements of both sets of regulations. All regulations are largely based on SAE J839 and SAE J934.

In addition, the GRSP evaluated alternative requirements and test procedures developed and presented by the U.S. and Canada, as well as refinements suggested by other GRSP delegates and representatives. Details of the discussions can be found in the final progress report of the working group (TRANS/WP29/2004/70, *http://www.unece.org/trans/main/wp29/wp29wgs/wp29gen/gen2004.html,* document 2004/70, this document can be found in the docket). A draft GTR for door retention components was presented to the GRSP on May 3, 2004. The GRSP thoroughly discussed the draft and an amended copy was developed into a formal document (TRANS/WP29/2004/69, *http://www.unece.org/trans/main/wp29/wp29wgs/wp29gen/gen2004.html,* document 2004/69, this document can be found in the docket).

The GRSP concluded its work and agreed to recommend the establishment of this GTR to the Executive Committee. On November 18, 2004, the Executive Committee approved establishment of the GTR. The U.S., as a Contracting Party of the 1998 Agreement and voting in favor of establishing this global technical regulation, is obligated to initiate rulemaking to adopt the provisions of the GTR.

The established GTR provides improvements over the current FMVSS No. 206, as well as those regulations of other countries. With respect to sliding doors, given that the existing standards have a door-in-frame requirement to test sliding door retention strength but do not provide a test procedure, the GTR provides a replacement for the existing requirements and a new associated full vehicle test procedure. It also provides that sliding doors either have a secondary latched position or a visual telltale signalling that the door is not fully closed. For doors with rear mounted hinge systems, it would add new requirements to prevent potential inadvertent openings while a vehicle is moving. In addition, the GTR ensured that existing requirements that were either in the FMVSS or the ECE were included, such as back door, double doors and door lock requirements.

VI. Proposed Improvements to FMVSS No. 206

A. Hinged Doors Issues

1. Load Tests

We are not proposing significant changes to the existing requirements for latches on hinged side doors. FMVSS No. 206 requires load tests of the hinge systems in the longitudinal and transverse directions. In the GTR, these

[14] "Child Restraint use in 2002: Results from the 2002 NOPUS Controlled Intersection Study." *http://www-nrd.nhtsa.dot.gov/pdf/nrd-30/NCSA/Rpts/2003/ChildRestraints.pdf.*

[15] The GRSP is made up of delegates from many countries around the world, and who have voting privileges. Representatives from manufacturing and consumer groups also attend and participate in the GRSP and informal working groups that are developing GTRs. Those that chose not to participate are kept apprised of the GTR progress from progress reports presented at the GRSP meetings.

tests were retained, but the regulatory text was reworded to remove any implication that the load is applied relative to the vehicle orientation. In addition, the force levels specified in the GTR are the result of harmonization of FMVSS 206 and ECE R11 to eliminate variations due to rounding of unit conversions. Finally, the GTR requires a secondary latched position for ''double doors'', which are referred to as cargo-doors in FMVSS 206. To the extent a requirement for the secondary positions may prevent inadvertent door openings, we believe it would be beneficial for double doors. Currently, all vans with such doors have cargo doors with primary door latch systems, which includes secondary positions. Double doors generally have more than one latch system; the GTR also requires that the transverse requirement apply only to the primary door latch system and not auxiliary door latch systems. We are proposing that FMVSS 206 be amended to include these GTR requirements.

2. Inertial Test

The GTR has a provision for a full vehicle dynamic inertial test procedure, as an option to the inertial calculation. Currently, the FMVSS 206 has a provision that manufacturers may certify to an agency-approved test procedure. As discussed earlier, NHTSA approved a GM test procedure in the 1960s. Since that time, no other requests have been approved. Such an approach is inconsistent with the manner in which the agency has historically operated. Accordingly, we propose to replace the current ''agency-approved'' provision with the specified test procedure from the GTR that manufacturers may use for certification.

As in FMVSS No. 206, ECE R11 has a provision for a dynamic inertial loading test, but there is no specified test procedure. In the process of drafting the GTR, it was recommended that the test procedure be developed based on one type of testing currently conducted for ECE R11 type approval. The GTR test procedure was validated by the U.S. and Canada.[16] It places inertial forces on doors, either when installed in the vehicle or when tested on a test fixture, in the longitudinal and transverse directions. The agency is aware additional specificity may be required in characterizing the test fixture in order to avoid issues with the enforceability of the proposed procedure. The agency intends to discuss this issue with Transport Canada and the European laboratories that have conducted this test. The U.S. plans to adopt requirements and a procedure to accommodate this optional dynamic test and will incorporate in its compliance procedure a tolerance for the inertial load limits to account for minor deviations in conducting full vehicle or sled testing.

In addition to the longitudinal and transverse tests, tests in the vertical direction were considered. Conducting the inertial test in the vertical direction is feasible, but is much more difficult to conduct than the tests in the longitudinal and transverse directions. Since the most common failure mode demonstrated in the inertial tests conducted by Canada was in the direction of door opening,[17] the GRSP determined that a test in the vertical direction appeared to be beneficial only for back door designs, which commonly open in the vertical direction. Therefore, we are only proposing this optional test procedure in the vertical direction for back doors.

3. Door Hinges

The load testing requirements for door hinges in the GTR are the same as those currently in FMVSS 206 and ECE R11. The side door requirements for hinges, which are based on SAE Recommended Practice J934, *Vehicle Passenger Door Hinge Systems*, appear to test adequately the strength and design of door hinges. NHTSA has fully analyzed its crash data and possible failure modes associated with the failure of door retention components. We have not identified a significant safety problem with door hinges currently installed in vehicles. Accordingly, we are not proposing to change the requirements of FMVSS No. 206, although we are proposing to articulate the test procedure for door hinges rather than relying on a modified incorporation by reference of the applicable SAE J839 recommended practice.

B. Side Sliding Doors Issues

We are also proposing to amend the current sliding door requirement and add a sliding door test procedure to improve the standard and harmonize with the GTR. The current requirements and test procedures in both ECE R11 and the North American standards were incorporated in the GTR. This includes the ECE R11 requirements for the latch/striker systems. However, neither ECE R11 nor FMVSS No. 206 have a detailed full vehicle sliding door test procedure that simulates real world door openings in crashes.

The GTR requires that sliding doors have either a primary door latch system that meets the same requirements as primary door latch systems on hinged side doors, or a system with a fully latched position and a mechanism for determining when a sliding door is not fully latched. We propose to adopt the same latch system requirement. We are unaware of any sliding door designs that do not use some type of latch system. Accordingly, FMVSS No. 206 already has a mechanism for testing these latches. If the sliding door is not equipped with a primary door latch system, a latch system without a secondary latched position is permitted as long as the vehicle is equipped with a telltale that informs the driver of the vehicle that the door is not fully latched. We are proposing this requirement because we believe this approach will assure vehicle occupants that a sliding door is completely closed. We are unaware of any systems that do not already meet this requirement.

The absence of a test procedure for the current FMVSS No. 206 sliding side door requirements is an obvious area for revision. Both NHTSA and Transport Canada had been working on the development of this test procedure for some time. The procedure that was adopted in the GTR is based on a procedure that Transport Canada had developed. The test is intended to address door failures that occur in front, rear, and rollover crashes. Since the test produces some level of longitudinal force, in addition to the direct lateral loading, the door components deform and twist. Therefore it is likely that compliant door latch systems will be more robust than in the past.

The procedure involves a full vehicle test in which a sliding door is tested by applying force against the two edges of the door. The test setup is initiated by placing two loading plates against the interior of the door. The loading plates are placed adjacent to the latch/striker system located at the door edge. If the door edge has two latch/striker systems along one edge, the loading plate is placed between the two systems. If a door edge does not have a latch/striker system, the loading plate is placed at a point midway along the length of the door edge. An outward lateral force of 18,000 N total is then applied to the loading plates.

The proposed test procedure for the sliding door transverse loading test specifies that the force application device would be mounted on the vehicle floor. We are requesting comments on the appropriateness and feasibility of mounting the force

[16] *See* presentation from Transport Canada in the DOT Docket NHTSA–1999–3705.

[17] Id.

application device external to the vehicle being tested.

A test failure would be indicated by (1) a 100 mm separation of the interior of the door from the exterior of the vehicle's doorframe at any point, or (2) either force application device's reaching a total displacement of 300 mm. The GTR requires that there be no more than 100 mm of separation, even if the latch system does not fail, to account for partial ejections through separation of sliding doors from the frame without the latch system failing. The 100 mm limit is based on a commonly used measurement for maximum allowable open space in the U.S. and Canada for school bus opening requirements.

C. Door Locks

We are proposing to retain the existing requirements for door locks largely as is. However, two minor changes are proposed. First, we are distinguishing between exterior and interior door locks. All exterior door locks must be capable of being unlocked from the interior of the vehicle by means of a lock release device which, when engaged, shall prevent operation of the exterior door handle or other exterior latch release control and which has an operating means and a lock release/engagement device located within the interior of the vehicle. Interior door locks are subject to the same requirements except that for rear side doors and back doors, this release mechanism must require a separate action distinct from the simple actuation of the door handle, and the release device must be readily accessible to the driver of the vehicle or an occupant seated adjacent to the door. The reason for differentiating between interior and exterior locks is that automatic door locks actually have two separate door lock devices, which may or may not use the same release device. For manual locks, there would be only one lock that secures the latch from both the interior and the exterior of the vehicle.

D. Applicability to Buses

We are proposing to extend the applicability of FMVSS No. 206 to buses with a GVWR of less than 10,000 lb. Historically, FMVSS No. 206 has not applied to buses because the types of doors installed on buses in the 1960s were not amenable to testing under the standard. However, with the advent of 12- and 15-passenger vans, smaller buses may now be equipped with traditional side hinged doors. There does not appear to be any reason not to subject these doors to the requirements of FMVSS No. 206, just as the doors on passenger cars and all trucks, regardless of weight, are currently regulated. We have developed a definition of a folding door that we believe will accommodate those types of bus doors that remain unsuitable for testing. While the standard has always exempted folding doors, it has never defined them. We anticipate that the impact of the extension will have little additional cost to vehicle manufacturers in meeting compliance. The agency is aware that all 12–15 passenger vans currently share the same door system and latching components as other smaller size vans, which already meet the requirements of our standard.

E. Summary of Improvements

This proposal, if made final, would improve the current FMVSS No. 206 requirements in several areas. First and foremost, with respect to sliding doors, given that the existing standard has a door in frame requirement to test sliding door retention strength but does not provide a test procedure, it would replace the existing requirement with new requirements and an associated full vehicle test procedure. It would also require that sliding doors either have a secondary latched position or a visual telltale signaling that the door is not fully closed. The fully latched and secondary latched positions would also be load tested and would be required to meet inertial requirements the same way as the latches on hinged doors. Second, it would require a secondary latched position for double-doors, currently referred to as ''cargo-doors.'' This requirement already exists in the European and Japanese regulations. Third, it would add a dynamic inertial test procedure to FMVSS No. 206 as an optional alternative to the current inertial calculation. Such a test procedure is more representative of the real world and has been conducted in Europe for type approval purposes. Fourth, it would add new requirements for rear-hinged side doors to prevent potential inadvertent opening while a vehicle is moving. Finally, it would extend the application of FMVSS No. 206 to buses with a Gross Vehicle Weight Rating (GVWR) of 4,536 kg (10,000 pounds) or less, including 12–15 passenger vans.

VII. Alternative Approaches to Testing Retention Components on Hinged Doors That Were Considered but Are Not Proposed

The agency has developed a series of new test procedures designed to simulate real world door opening in crashes. These tests consist of two door-in-frame quasi-static (full door) tests and a bench-type component test, known as the combination test. However, because of issues regarding (1) the practicability of the tests, and (2) complications in developing the compliance tests, we are not proposing them in this document.

A. Hinged Side Door System Tests (Full Door Tests)

The agency has designed lateral and longitudinal full door tests in which a vehicle door is placed in a test frame as opposed to remaining on the vehicle. The lateral full door test is designed to simulate latch failures in crashes that produce outward forces on the door (*i.e.*, through occupant loading or inertial loading) such as side crashes that result in vehicle spin and rollover. The longitudinal full door test is designed to simulate a collision in which the side of the vehicle is stretched, leading to the possibility that the striker could be torn from its mated latch (*i.e.*, far side door in side impacts, and front and rear offset crashes on the opposite side door).

We have decided against proposing these full door tests because they create undue restrictions on certain door designs and have an unenforceable test procedure. Additionally, we have determined that even if the problems could be resolved, it is unlikely that the full door tests would provide additional value over the existing component tests.

In addition, as part of the GTR drafting process, some GSRP delegates and representatives independently evaluated the contemplated test procedures. They expressed concern that the new procedure would be unduly design restrictive, given the limitations of the test frame. For example, it could be complicated to construct test frames individualized to each available door system design. A test frame may not be representative of real world conditions, in which a door system design may incorporate advanced devices such as door clips or door interlocks.[18] Additionally, building a test frame to adequately address new latch designs that may be mounted in non-traditional locations may be difficult. Likewise, the procedures do not allow manufacturers to use door trim that provides structural support to the door because of the need to remove the trim to accommodate placement of the loading device.

By the same token, conducting the proposed tests on the full vehicle may

[18] Door clips and interlocks are devices that are built into the door frame and attach to the door to retain and prevent the door from intruding into the vehicle when impacted.

be impractical because not all loads can be applied to a closed door. Alternatively, it may be possible to cut away the door frame and attach it to the test frame. However, such an approach may not fully replicate the actual door-in-frame as installed in the vehicle since cutting the door frame may change its characteristics. This approach would require that the agency develop an acceptable procedure for cutting away the vehicle door system in such a way to address the fit between the latch and striker, as well as the physical characteristics of the door and the doorframe. The agency decided that expending additional effort on this was not warranted given the small number of potential benefits.

B. Combination Component Test

NHTSA also developed a new component test that would require simultaneous application of two loads. In theory, the combination test procedure is representative of the combination of longitudinal compressive and lateral tensile forces that occur in real-world latch failures. Currently, no regulation, directive, or international voluntary standard has such a requirement. Examples of the types of crashes in which such forces could occur are rollover crashes and crashes in which either the front or the rear of the vehicle is impacted (including in an offset mode). The combination test procedure is a static bench test that may be capable of evaluating the strength of the latching systems.

Unlike the full door tests discussed immediately above, NHTSA's initial and current evaluation of the combination test procedure and existing crash data indicate that the procedure may reduce a substantial number of door openings at a level that is statistically significant. No other test procedure within FMVSS No. 206 or ECE R11 simulates these types of latch failure conditions. For these reasons, the combination test procedure was considered for inclusion in the GTR. There was significant support from GRSP delegates and representatives for a test that addresses the door failure modes represented by this test. However, in some vehicles, the test setup is such that the striker cannot interface with the faceplate of the latch, rendering the test meaningless.[19] While it is possible to (1) modify the striker portion of the latch system so that the test can be conducted, or (2) test using a full vehicle, the GRSP delegates and representatives expressed strong concern regarding the adoption of this type of procedure and its potential for enforceability questions. NHTSA shares these concerns. A test procedure that cannot be conducted in an objective manner from vehicle to vehicle is problematic in terms of enforcement. Thus, while NHTSA expects a test procedure that addresses the retention failures identified by the combination test to be pursued, we do not presently believe we have a test procedure that can be incorporated into a motor vehicle safety standard.

However, there is widespread support in the international community for a test that addresses the door failure modes and potential benefits represented by the combination test. Therefore, the GRSP delegates and representatives agreed to continue to review work on the modification of the U.S.-based procedure, as well as to look for other new procedures to capture the benefits associated with door failures due to simultaneous compressive longitudinal and tensile lateral loading of latch systems in real world crashes. Any acceptable procedure developed, if practicable and enforceable, could then be added to the GTR as an amendment. We seek comments on other viable procedures that could be considered for simultaneous combination of loading of the latch systems. Please provide sufficient detail on the procedure(s) and support test data.

VIII. Door Closure and Operability Requirements

Currently, FMVSS No. 206 does not have door retention and door operability requirements in dynamic crash tests. At present, the agency has door retention requirements and evaluates door closure as part of FMVSS No. 208, ''Frontal Occupant Protection,'' which requires that the doors be retained and the test dummies remain in the vehicle until both the vehicle and the dummies have ceased moving after the test. FMVSS No. 214 also contains retention requirements for doors struck by a movable deformable barrier in testing under the standard to remain attached to the vehicle, as well as a requirement for non-struck doors to remain closed during and after crashes. However, the standards do not have a test procedure for evaluating these requirements in dynamic crash testing.

The GTR and ECE R11 do not contain requirements for door retention and door operability. The European Union has requirements to evaluate door retention and door operability in their frontal and side impact standards (ECE R94 and ECE R95). However, as in the U.S., the European Union also does not have established compliance procedures for compliance with these requirements.

The agency has developed test procedures for evaluating door retention and door operability requirements for dynamically tested vehicles in frontal and side impacts. Following validation of these procedures, the agency plans address the door operability and retention issues in a separate notice.

IX. Costs, Benefits, and the Proposed Effective Date

This proposal, if made final, would add and update test procedures for door latches. We believe that only one of these, a new sliding door test procedure for FMVSS No. 206 would add costs to vehicles and provide quantifiable benefits for consumers. There were almost 1.4 million vans sold in 2003 that had sliding doors. The sliding door test procedure essentially requires sliding doors to have two latches. An estimated 660,000 vans with 1.2 million sliding doors need a second latch to comply. The incremental cost of adding a second latch is estimated to average $7.00 per door. Total costs are estimated at $8.4 million (in 2003 economics).

The average annual ejections through sliding doors from 1995–2003 resulted in 20 fatalities and 30 injuries. When an occupant is retained in a vehicle and the ejection is eliminated, it does not necessarily mean that the occupant escapes injury. When all vehicles with sliding doors meet this proposal, annually an estimated 7 fatalities and 4 occupants with serious to severe injuries would be reduced in severity to minor injuries (AIS 1) as a result of remaining inside the vehicle.

The agency has tentatively determined that, aside from sliding doors that will require the addition of a second latch, the current vehicle fleet would comply with the proposal, if made final. Therefore, we are proposing a lead time of two complete model years from when a final rule is published. For example, if a final rule were adopted on December 1, 2005, the rule would be effective beginning September 1, 2008. We believe that this would provide manufacturers adequate time to make the necessary design changes. Optional early compliance would be permitted on and after the date of publication of the final rule in the **Federal Register**.

X. Differences Between the GTR and the NPRM

This NPRM fulfills our obligation to initiate domestic rulemaking to adopt the provisions of the GTR. With the exception of minor differences, the

[19] See Transport Canada presentation on testing in Docket NHTSA–1999–3705 and VRTC report second series (in preparation).

NPRM is based closely on the GTR. These minor differences are as follows:

• The NPRM proposes application to 12- and 15-passenger vans and smaller buses under 10,000 lb with hinged or sliding doors; the GTR does not. This reflects the fact that these vehicles comprise a larger portion of the U.S. vehicle fleet than when compared globally.

• The NPRM proposes to maintain, but clarify the language of the current requirements of FMVSS No. 206 for rear side door locks. The GTR allows for an option of the rear door lock system meeting either the current FMVSS No. 206 requirement or requiring a system that allows the door to be unlocked and opened with a simple actuation of the interior door handle as long as there is a child safety lock. These options for the rear side door lock system in the GTR address the need for egress from a rear seat, while respecting the need to prevent children from opening a locked door. In the GTR, neither type of system is prohibited as a supplemental safety device. It was left to a country's discretion which system would be required as the primary safety device. The NPRM does not prohibit child safety locks as a supplemental system.

• The GTR also allows the option of the sliding door tests to be performed on either a vehicle or door body-in-white (*i.e.*, pre-production), or the post-production door or vehicle. The body-in-white option is important for countries that certify components and vehicles under a type approval system. Since the U.S. does not use a type approval system and conducting these tests on body-in-white vehicles or doors would create enforceability issues, the NPRM specifies that the tests be conducted on the post-production vehicle or door.

The GRSP and the WP.29 are aware that the U.S. intended to deviate from the GTR in these areas. Regardless of these minor differences, we believe that the provisions of the GTR, if adopted, would improve vehicle safety here in the United States and abroad.

XI. Regulatory Analyses and Notices

A. Vehicle Safety Act

Under 49 U.S.C. Chapter 301, *Motor Vehicle Safety* (49 U.S.C. 30101 *et seq.*), the Secretary of Transportation is responsible for prescribing motor vehicle safety standards that are practicable, meet the need for motor vehicle safety, and are stated in objective terms. 49 U.S.C. 30111(a). When prescribing such standards, the Secretary must consider all relevant, available motor vehicle safety information. 49 U.S.C. 30111(b). The Secretary must also consider whether a proposed standard is reasonable, practicable, and appropriate for the type of motor vehicle or motor vehicle equipment for which it is prescribed and the extent to which the standard will further the statutory purpose of reducing traffic accidents and associated deaths. *Id*. Responsibility for promulgation of Federal motor vehicle safety standards was subsequently delegated to NHTSA. 49 U.S.C. 105 and 322; delegation of authority at 49 CFR 1.50.

The agency carefully considered these statutory requirements in proposing these amendments to FMVSS Nos. 206 and 214.

We believe that the proposed amendments to FMVSS No. 206 will be practicable. This document does not propose significant changes to the current requirements of FMVSS No. 206. Currently, 40 percent of the sliding doors will pass the proposed test. Additionally, if made final, the amendments would harmonize the U.S. requirements with the global technical regulation.

We believe that this proposed rule would be appropriate for the vehicles subject to the requirements. If adopted, the proposal would continue to exclude vehicle doors for which the requirements and test procedures are impractical or unnecessary (*e.g.*, folding doors, roll-up-doors).

Finally, the agency has tentatively determined that the proposed amendments would provide objective procedures for determining compliance. The proposed test procedures have been evaluated by the agency, and we have tentatively determined that they produce repeatable and reproducible results. The sliding door load test procedure and the inertial test procedure have been vetted by the international automotive community, which has determined them to be acceptable. Further, we are proposing test procedures to provide additional objectivity to existing requirements.

B. Executive Order 12866 and DOT Regulatory Policies and Procedures

Executive Order 12866, ''Regulatory Planning and Review'' (58 FR 51735, October 4, 1993), provides for making determinations whether a regulatory action is ''significant'' and therefore subject to Office of Management and Budget (OMB) review and to the requirements of the Executive Order. The Order defines a ''significant regulatory action'' as one that is likely to result in a rule that may:

(1) Have an annual effect on the economy of $100 million or more or adversely affect in a material way the economy, a sector of the economy, productivity, competition, jobs, the environment, public health or safety, or State, local, or tribal governments or communities;

(2) Create a serious inconsistency or otherwise interfere with an action taken or planned by another agency;

(3) Materially alter the budgetary impact of entitlements, grants, user fees, or loan programs or the rights and obligations of recipients thereof; or

(4) Raise novel legal or policy issues arising out of legal mandates, the President's priorities, or the principles set forth in the Executive Order.

We have considered the impact of this rulemaking action under Executive Order 12866 and the Department of Transportation's regulatory policies and procedures. This rulemaking would not have an annual effect on the economy of $100 million or more, but is significant due to public interest in the issues. Therefore, this document was reviewed by the Office of Management and Budget under E.O. 12866, ''Regulatory Planning and Review.'' This document would amend 49 CFR part 571.206 by adding new performance requirements for hinged side doors and a new compliance test procedure for side sliding doors. These requirements would have to be met by vehicle manufacturers.

The estimated cost of the new requirements, if adopted, would be minor. We have estimated the cost of modifications for sliding doors with one latch at $7.00 per door, for a total cost to the entire fleet of approximately $8.4 million (2003 dollars). For a further explanation of the estimated costs, *see* the Preliminary Regulatory Evaluation provided in the docket for this proposal.

C. Executive Order 13132

Executive Order 13132 requires NHTSA to develop an accountable process to ensure ''meaningful and timely input by State and local officials in the development of regulatory policies that have federalism implications.'' ''Policies that have federalism implications'' is defined in the Executive Order to include regulations that have ''substantial direct effects on the States, on the relationship between the National Government and the States, or on the distribution of power and responsibilities among the various levels of government.'' Under Executive Order 13132, the agency may not issue a regulation with federalism implications, that imposes substantial direct compliance costs, and that is not

required by statute, unless the Federal Government provides the funds necessary to pay the direct compliance costs incurred by State and local governments, the agency consults with State and local governments, or the agency consults with State and local officials early in the process of developing the proposed regulation. NHTSA also may not issue a regulation with federalism implications and that preempts State law unless the agency consults with State and local officials early in the process of developing the proposed regulation.

We have analyzed this rule in accordance with the principles and criteria set forth in Executive Order 13132 and have determined that this rule does not have sufficient Federal implications to warrant consultation with State and local officials or the preparation of a federalism summary impact statement. The rule would not have any substantial impact on the States, or on the current Federal-State relationship, or on the current distribution of power and responsibilities among the various local officials.

D. Executive Order 13045

Executive Order 13045 (62 FR 19885, April 23, 1997) applies to any rulemaking that: (1) is determined to be ''economically significant'' as defined under E.O. 12866, and (2) concerns an environmental, health or safety risk that NHTSA has reason to believe may have a disproportionate effect on children. If the regulatory action meets both criteria, we must evaluate the environmental health or safety effects of the planned rule on children, and explain why the planned regulation is preferable to other potentially effective and reasonably feasible alternatives considered by us.

This rulemaking is not subject to the Executive Order because it is not economically significant as defined in E.O. 12866. It also does not involve decisions based on health risks that disproportionately affect children.

E. Executive Order 12778

Pursuant to Executive Order 12778, ''Civil Justice Reform,'' we have considered whether this proposed rule would have any retroactive effect. This proposed rule, if adopted, would not have any retroactive effect. A petition for reconsideration or other administrative proceeding will not be a prerequisite to an action seeking judicial review of this rule if it is adopted. This proposed rule would not preempt the states from adopting laws or regulations on the same subject, except that it would preempt a State regulation that is in actual conflict with the Federal regulation or makes compliance with the Federal regulation impossible or interferes with the implementation of the Federal statute.

F. Regulatory Flexibility Act

Pursuant to the Regulatory Flexibility Act (5 U.S.C. 601 *et seq.*, as amended by the Small Business Regulatory Enforcement Fairness Act (SBREFA) of 1996) whenever an agency is required to publish a notice of rulemaking for any proposed or final rule, it must prepare and make available for public comment a regulatory flexibility analysis that describes the effect of the rule on small entities (*i.e.*, small businesses, small organizations, and small governmental jurisdictions). However, no regulatory flexibility analysis is required if the head of an agency certifies the rule would not have a significant economic impact on a substantial number of small entities. SBREFA amended the Regulatory Flexibility Act to require Federal agencies to provide a statement of the factual basis for certifying that a rule would not have a significant economic impact on a substantial number of small entities.

I have considered the effects of this rulemaking action under the Regulatory Flexibility Act (5 U.S.C. 601 *et seq.*) and certify that this proposal would not have a significant economic impact on a substantial number of small entities. Vehicle manufacturers typically have their door latches designed and produced by wholly-owned subsidiaries. Accordingly, there are very few independent vehicle door latch manufacturers.

G. National Environmental Policy Act

We have analyzed this proposed amendment for the purposes of the National Environmental Policy Act and determined that it would not have any significant impact on the quality of the human environment.

H. Paperwork Reduction Act

Under the Paperwork Reduction Act of 1995, a person is not required to respond to a collection of information by a Federal agency unless the collection displays a valid OMB control number. The proposed rule does not contain any new information collection requirements.

I. National Technology Transfer and Advancement Act

Section 12(d) of the National Technology Transfer and Advancement Act of 1995 (NTTAA), Public Law 104–113, section 12(d) (15 U.S.C. 272) directs us to use voluntary consensus standards in its regulatory activities unless doing so would be inconsistent with applicable law or otherwise impractical. Voluntary consensus standards are technical standards (*e.g.*, materials specifications, test methods, sampling procedures, and business practices) that are developed or adopted by voluntary consensus standards bodies, such as the Society of Automotive Engineers (SAE). The NTTAA directs us to provide Congress, through OMB, explanations when we decide not to use available and applicable voluntary consensus standards.

No voluntary consensus standards were used in developing the proposed requirements because no voluntary standards exist that address the subject of this rulemaking. However, the SAE Recommended Practice J934, September 1998, *Vehicle Passenger Door Hinge Systems* and SAE Recommended Practice J839, September 1998, *Passenger Car Side Door Latch Systems* would continue to be incorporated by reference in the regulatory text.

J. Unfunded Mandates Reform Act

Section 202 of the Unfunded Mandates Reform Act of 1995 (UMRA) requires Federal agencies to prepare a written assessment of the costs, benefits and other effects of proposed or final rules that include a Federal mandate likely to result in the expenditure by State, local or tribal governments, in the aggregate, or by the private sector, of more than $100 million in any one year (adjusted for inflation with base year of 1995). Before promulgating a NHTSA rule for which a written statement is needed, section 205 of the UMRA generally requires us to identify and consider a reasonable number of regulatory alternatives and adopt the least costly, most cost-effective or least burdensome alternative that achieves the objectives of the rule. The provisions of section 205 do not apply when they are inconsistent with applicable law. Moreover, section 205 allows us to adopt an alternative other than the least costly, most cost-effective or least burdensome alternative if we publish with the final rule an explanation why that alternative was not adopted.

The proposed rule would not impose any unfunded mandates under the Unfunded Mandates Reform Act of 1995. This rulemaking does not meet the definition of a Federal mandate because it would not result in costs of $100 million or more to either State, local, or tribal governments, in the aggregate, or to the private sector. Thus, this rulemaking is not subject to the

requirements of sections 202 and 205 of the UMRA.

K. Regulation Identifier Number (RIN)

The Department of Transportation assigns a regulation identifier number (RIN) to each regulatory action listed in the Unified Agenda of Federal Regulations. The Regulatory Information Service Center publishes the Unified Agenda in April and October of each year. You may use the RIN contained in the heading at the beginning of this document to find this action in the Unified Agenda.

XII. Public Comments

How Do I Prepare and Submit Comments?

Your comments must be written and in English. To ensure that your comments are correctly filed in the Docket, please include the docket number of this document in your comments.

Your comments must not be more than 15 pages long. (49 CFR 553.21). We established this limit to encourage you to write your primary comments in a concise fashion. However, you may attach necessary additional documents to your comments. There is no limit on the length of the attachments.

Please submit two copies of your comments, including the attachments, to Docket Management at the address given above under **ADDRESSES**.

How Can I Be Sure That My Comments Were Received?

If you wish Docket Management to notify you upon its receipt of your comments, enclose a self-addressed, stamped postcard in the envelope containing your comments. Upon receiving your comments, Docket Management will return the postcard by mail.

How Do I Submit Confidential Business Information?

If you wish to submit any information under a claim of confidentiality, you should submit three copies of your complete submission, including the information you claim to be confidential business information, to the Chief Counsel, NHTSA, at the address given above under **FOR FURTHER INFORMATION CONTACT**. In addition, you should submit two copies, from which you have deleted the claimed confidential business information, to Docket Management at the address given above under **ADDRESSES.** When you send a comment containing information claimed to be confidential business information, you should include a cover letter setting forth the information specified in our confidential business information regulation. (49 CFR part 512.)

Will the Agency Consider Late Comments?

We will consider all comments that Docket Management receives before the close of business on the comment closing date indicated above under **DATES**. To the extent possible, we will also consider comments that Docket Management receives after that date. If Docket Management receives a comment too late for us to consider it in developing a final rule (assuming that one is issued), we will consider that comment as an informal suggestion for future rulemaking action.

How Can I Read the Comments Submitted by Other People?

You may read the comments received by Docket Management at the address given above under **ADDRESSES**. The hours of the Docket are indicated above in the same location.

You may also see the comments on the Internet. To read the comments on the Internet, take the following steps:

- Go to the Docket Management System (DMS) Web page of the Department of Transportation (*http://dms.dot.gov/*).
- On that page, click on ''search.''
- On the next page (*http://dms.dot.gov/search/*), type in the four-digit docket number shown at the beginning of this document. Example: If the docket number were ''NHTSA–1998–1234,'' you would type ''1234.'' After typing the docket number, click on ''search.''
- On the next page, which contains docket summary information for the docket you selected, click on the desired comments. You may download the comments.

Please note that even after the comment closing date, we will continue to file relevant information in the Docket as it becomes available. Further, some people may submit late comments. Accordingly, we recommend that you periodically check the Docket for new material.

Anyone is able to search the electronic form of all comments received into any of our dockets by the name of the individual submitting the comment (or signing the comment, if submitted on behalf of an association, business, labor union, etc.). You may review DOT's complete Privacy Act Statement in the **Federal Register** published on April 11, 2000 (Volume 65, Number 70; Pages 19477–78) or you may visit *http://dms.dot.gov.*

List of Subjects in 49 CFR Part 571

Motor vehicle safety, Reporting and recordkeeping requirements, and Tires.

In consideration of the foregoing, NHTSA proposes to amend 49 CFR part 571.206 as follows:

PART 571—FEDERAL MOTOR VEHICLE SAFETY STANDARDS

1. The authority citation for part 571 would continue to read as follows:

Authority: 49 U.S.C. 322, 30111, 30115, 30117 and 30166; delegation of authority at 49 CFR 1.50.

2. 49 CFR 571.206 would be amended by:

a. Revising S1; S2; the definitions of ''auxiliary door latch,'' ''back door,'' ''fork-bolt,'' ''primary door latch,'' ''side front door,'' ''side rear door,'' and ''trunk lid'' in S3; S4 through S4.1.1.3; S4.1.2; S4.2 through S4.2.1.2; S4.2.2; S4.3; S5.1 through S5.1.1.2; S5.1.2; S5.2; S5.2.1; S5.2.2; Figure 1; and

b. Adding ''auxiliary door latch system,'' ''body member,'' 'door closure warning system,'' ''door hinge system,'' ''door latch system,'' ''door member,'' ''door system,'' ''double door,'' ''folding door,'' ''force application zone,'' ''fork-bolt opening direction,'' ''fully-latched position,'' ''hinge,'' ''hinge pin,'' ''latch,'' ''primary door latch system,'' ''secondary latched position,'' ''striker,'' to the definitions in S3; S4.1.1.4; S4.1.2.1 through S4.1.2.3; S4.2.1.3; S4.2.2.1; S4.2.2.2; S4.3.1; S4.3.2; S5; S5.1.1.3; S5.1.1.4; S5.1.2.1 through S5.1.2.4; S5.2.1.1 through S5.2.1.4; S5.2.2.1 through S5.2.2.4; S5.3; Figures 2 through 4, Table 1, Figures 5 through 9; and

c. Removing ''cargo-type door'' and ''fork-bolt opening'' from the definitions in S3, S4.1.3, S4.1.3.1, S4.4 through S4.5, S5.4 through S5.5.

The revisions and additions read as follows:

§ 571.206 Standard No. 206; Door locks and door retention components.

S1. *Scope and Purpose.* This regulation specifies requirements for vehicle door locks and door retention components, including latches, hinges, and other supporting means, to minimize the likelihood of occupants being ejected from a vehicle as a result of impact.

S2. *Application.* This regulation applies to vehicle door locks and door retention components on side or back doors that lead directly into a compartment that contains one or more seating accommodations in passenger cars, multipurpose vehicles, and trucks and in buses with a gross vehicle weight rating (GVWR) of 4,536 kg or less.

S3. *Definitions.*

Auxiliary door latch is a latch equipped with a fully latched position and fitted to a door or door system equipped with a primary door latch system.

Auxiliary door latch system consists, at a minimum, of an auxiliary door latch and a striker.

Back door is a door or door system on the back end of a motor vehicle through which passengers can enter or depart the vehicle or cargo can be loaded or unloaded. It does not include:

(a) A trunk lid; or

(b) A door or window composed entirely of glazing material and whose latches and/or hinge systems are attached directly to the glazing material.

Body member is that portion of the hinge normally affixed to the body structure.

* * * * *

Door closure warning system is a system that will activate a visual signal located where it can be clearly seen by the driver when a door latch system is not in its fully latched position and while the vehicle ignition is activated.

Door hinge system is one or more hinges used to support a door.

Door latch system consists, at a minimum, of a latch and a striker.

Door member is that portion of the hinge normally affixed to the door structure and constituting the swinging member.

Door system is the door, latch, striker, hinges, sliding track combinations and other door retention components on a door and its surrounding doorframe. The door system of a double door includes both doors.

Double door is a system of two doors where the front door or wing door opens first and connects to the rear door or bolted door, which opens second.

Folding door is a movable barrier, which will close off an entranceway to a bus, multipurpose passenger vehicle or truck, consisting of two or more hinge panels that swing, slide, or rotate; does not have a striker and latch assembly; and is normally controlled from a location adjacent to the vehicle's driver seat.

Force application zone is defined by a rectangular area on the door or rear hatch bounded by the projection onto the door or hatch exterior of two vertical lines, 25 mm on either side of the right or left edges of the exterior handle or the latch release handle, and the projection of two horizontal lines 10 mm and 110 mm below the lowest point of the exterior door handle or the latch release handle. In the event there is insufficient space below the release handle the force application zone shall be located above the release handle.

Fork-bolt is the part of the latch that engages and retains the striker when in a latched position.

Fork-bolt opening direction is the direction opposite to that in which the striker enters the latch to engage the fork-bolt.

Fully latched position is the coupling condition of the latch that retains the door in a completely closed position.

Hinge is a device system used to position the door relative to the body structure and control the path of the door swing for passenger ingress and egress.

Hinge pin is that portion of the hinge normally interconnecting the body and door members and establishing the swing axis.

Latch is a device employed to maintain the door in a closed position relative to the vehicle body with provisions for deliberate release (or operation).

Primary door latch is a latch equipped with both a fully latched position and a secondary latched position.

Primary door latch system consists, at a minimum, of a primary door latch and a striker.

Secondary latched position refers to the coupling condition of the latch that retains the door in a partially closed position.

Side front door is a door that, in a side view, has 50 percent or more of its opening area forward of the rearmost point on the driver's seat back, when the seat back is adjusted to its most vertical and rearward position.

Side rear door is a door that, in a side view, has 50 percent or more of its opening area to the rear of the rearmost point on the driver's seat back, when the driver's seat is adjusted to its most vertical and rearward position.

Striker is a device with which the latch engages to maintain the door in the fully latched or secondary latched position.

Trunk lid is a movable body panel that provides access from outside the vehicle to a space wholly partitioned from the occupant compartment by a permanently attached partition or fixed or fold-down seat back.

S4. *Requirements.* The requirements apply to all side and back doors and door components except for those on folding doors, roll-up doors, detachable doors, and doors that are designated to provide emergency egress.

S4.1 *Hinged Doors.*

S4.1.1 *Primary Door Latch System.* Each hinged door system shall be equipped with at least one primary door latch system.

S4.1.1.1 *Load Test One.*

(a) Each primary door latch system and auxiliary door latch system, when in the fully latched position, shall not separate when a load of 11,000 N is applied in the direction perpendicular to the face of the latch such that the latch and the striker anchorage are not compressed against each other, when tested in accordance with S5.1.1.1.

(b) When in the secondary latched position, the primary door latch system shall not separate when a load of 4,500 N is applied in the same direction specified in paragraph (a) of this section when demonstrated in accordance with S5.1.1.1.

S4.1.1.2 *Load Test Two.*

(a) Each primary door latch system and auxiliary door latch system, when in the fully latched position, shall not separate when a load of 9,000 N is applied in the fork-bolt opening direction and parallel to the face of the latch, when demonstrated in accordance with S5.1.1.2.

(b) When in the secondary latched position, the primary door latch system shall not separate when a load of 4,500 N is applied in the same direction specified in (a) when demonstrated in accordance with S5.1.1.2.

S4.1.1.3 *Load Test Three.* Each primary door latch system on back doors shall not disengage from the fully latched position when a load of 9,000 N is applied in a direction orthogonal to the directions specified in S4.1.1.1 and S4.1.1.2 when tested in accordance with S5.1.1.3.

S4.1.1.4 *Inertial Load.* Each primary door latch system and auxiliary door latch system shall meet either the dynamic requirements specified in paragraphs (a) and (b) of this section or the calculation of inertial load resistance specified in paragraph (c) of this section.

(a) Each primary door latch and auxiliary door latch on each hinged door shall not disengage from the fully latched position when an inertia load of 30 g is applied to the door latch system, including the latch and its activation device, in the directions parallel to the vehicle's longitudinal and transverse axes with the locking device disengaged and demonstrated in accordance with S5.1.1.4.

(b) Each primary door latch and auxiliary door latch on each hinged back door shall also not disengage from the fully latched position when an inertia load of 30g is applied to the door latch system, including the latch and its activation device, in the direction parallel to the vehicle's vertical axis with the locking device disengaged and

when demonstrated in accordance with S5.1.1.4.

(c) Each component or subassembly can be calculated for its minimum inertia load resistance in a particular direction. The combined resistance to the unlatching operation must assure that the door latch system, when properly assembled in the vehicle door, will remain latched when subjected to an inertia load of 30 g in the vehicle directions specified in paragraph (a) or (b) of this section, as applicable, when demonstrated in accordance with S5.1.1.4(a).

S4.1.2 *Door Hinges.*

S4.1.2.1 When tested in accordance with S5.1.2, each door hinge system shall

(a) Support the door,

(b) Not separate when a longitudinal load of 11,000 N is applied,

(c) Not separate when a transverse load of 9,000 N is applied, and

(d) Not separate when a vertical load of 9,000 N is applied.

S4.1.2.2 If a single hinge within the hinge system is tested instead of the entire hinge system, the hinge must bear a load proportional to the total number of hinges in the hinge system.

S4.1.2.3 On side doors with rear mounted hinges that can be operated independently of other doors, (a) The interior door handle shall be inoperative when the speed of the vehicle is greater than or equal to 4 km/h, and

(b) A door closure warning system shall be provided for those doors.

S4.2 *Sliding Side Doors.*

S4.2.1 *Latch System.* Each sliding door system shall be equipped with either:

(a) At least one primary door latch system, or

(b) A door latch system with a fully latched position and a door closure warning system.

S4.2.1.1 *Load Test One.*

(a) At least one door latch system, when in the fully latched position, shall not separate when a load of 11,000 N is applied in the direction perpendicular to the face of the latch such when tested in accordance with S5.2.1.1.

(b) In the case of a primary door latch system, when in the secondary latched position, the door latch system shall not separate when a load of 4,500 N is applied in the same direction when tested in accordance with S5.2.1.1.

S4.2.1.2 *Load Test Two.*

(a) At least one door latch system, when in the fully latched position, shall not separate when a load of 9,000 N is applied in the fork-bolt opening direction and parallel to the face of the latch when tested in accordance with S5.2.1.2.

(b) In the case of a primary door latch system, when in the secondary latched position, the door latch system shall not separate when a load of 4,500 N is applied in the same direction when tested in accordance with S5.2.1.2.

S4.2.1.3 *Inertial Load.* Each door latch system certified as meeting the requirements of S4.2.1.1 and S4.2.1.2 shall meet either the dynamic requirements specified in paragraph (a) of this section or the calculation of inertial load resistance specified in paragraph (b) of this section.

(a) The door latch system shall not disengage from the fully latched position when an inertial load of 30g is applied to the door latch system, including the latch and its activation mechanism, in the directions parallel to the vehicle's longitudinal and transversal axes with the locking mechanism disengaged and when tested in accordance with 5.2.1.4.

(b) The minimum inertial load resistance can be calculated for each component or subassembly. Their combined resistance to the unlatching operation must assure that the door latch system, when properly assembled in the vehicle door, will remain latched when subjected to an inertia load of 30 g in the vehicle directions specified in S4.2.1.1 or S4.2.1.2, as applicable, in accordance with S5.1.1.4.

S4.2.2 *Door System.*

S4.2.2.1 The track and slide combination or other supporting means for each sliding door, while in the closed fully latched position, shall not separate from the door frame when a total force of 18,000 N along the vehicle transverse axis is applied to the door in accordance with S5.2.2.

S4.2.2.2 The sliding door, when tested in accordance with S5.2.2, fails the requirement of S4.2.2.1 if any one of the following occurs:

(a) A separation between the interior of the door and the exterior edge of the doorframe exceeds 100 mm, while the required force is maintained.

(b) Either force application device reaches a total displacement of 300 mm.

S4.3 *Door Locks.* Each door shall be equipped with at least one locking device which, when engaged, shall prevent operation of the exterior door handle or other exterior latch release control and which has an operating means and a lock release/engagement device located within the interior of the vehicle.

S4.3.1 *Rear side doors.*

Each rear side door shall be equipped with at least one locking device which has a lock release/engagement mechanism located within the interior of the vehicle and readily accessible to the driver of the vehicle or an occupant seated adjacent to the door, and which, when engaged, prevents operation of the interior door handle or other interior latch release control and requires separate actions to unlock the door and operate the interior door handle or other interior latch release control.

S4.3.2 *Back doors.*

Each back door equipped with an interior door handle or other interior latch release control, shall be equipped with at least one locking device that meets the requirements of S4.3.1.

S5 *Test Procedures.*

S5.1 *Hinged Doors.*

S5.1.1 *Primary Door Latches.*

S5.1.1.1 *Load Test One Force Application.* Compliance with S4.1.1.1 and S4.2.1 is demonstrated in accordance with the following:

(a) *Fully Latched Position.*

(1) Adapt the test fixture shown in Figure 1 to the mounting provisions of the latch and striker. Align the direction of engagement parallel to the linkage of the fixture. Mount the latch and striker in the fully latched position to the test fixture.

(2) Locate weights to apply a 900 N load tending to separate the latch and striker in the direction of the door opening.

(3) Apply the test load, in the direction specified in S4.1.1.1 and Figure 4, at a rate not to exceed 5 mm/min until the required load has been achieved. Record the maximum load achieved.

(b) *Secondary Latched Position.*

(1) Adapt the test fixture shown in Figure 1 to the mounting provisions of the latch and striker. Align the direction of engagement parallel to the linkage of the fixture. Mount the latch and striker in the secondary latched position to the test fixture.

(2) Locate weights to apply a 900 N load tending to separate the latch and striker in the direction of the door opening.

(3) Apply the test load, in the direction specified in S4.1.1.1 and Figure 4, at a rate not to exceed 5 mm/min until the required load has been achieved. Record maximum load achieved.

(4) The test plate on which the door latch is mounted will have a striker cut-out configuration similar to the environment in which the door latch will be mounted on normal vehicle doors.

S5.1.1.2 *Load Test Two Force Application.* Compliance with S4.1.1.2 and S4.2.2 is demonstrated in accordance with the following:

(a) *Fully Latched Position.*

(1) Adapt the test fixture shown in Figure 2 to the mounting provisions of

the latch and striker. Mount the latch and striker in the fully latched position to the test fixture.

(2) Apply the test load, in the direction specified in S4.1.1.2 and Figure 4, at a rate not to exceed 5 mm/min until the required load has been achieved. Record the maximum load achieved.

(b) *Secondary Latched Position.*

(1) Adapt the test fixture shown in Figure 2 to the mounting provisions of the latch and striker. Mount the latch and striker in secondary latched position to the test fixture.

(2) Apply the test load, in the direction specified in S4.1.1.2 and Figure 4, at a rate not to exceed 5 mm/min until the required load has been achieved. Record the maximum load achieved.

S5.1.1.3 *Load Test Three Force Application.* Compliance with S4.1.1.3 is demonstrated in accordance with the following:

(a) Adapt the test fixture shown in Figure 3 to the mounting provisions of the latch and striker. Mount the latch and striker in fully latched position to the test fixture.

(b) Apply the test load, in the directions specified in S4.1.1.3 and Figure 4, at a rate not to exceed 5 mm/min until the required load has been achieved. Record the maximum load required.

S5.1.1.4 *Inertia Force Application.* Compliance with S4.1.1.4 and S4.2.3 is demonstrated in accordance with either paragraph (a) or (b) of this section.

(a) *Calculation.* Compliance shall be demonstrated in accordance with paragraph 6 of Society of Automotive Engineers Recommended Practice J839, *Passenger Car Side Door Latch Systems,* June 1991.

(b) *Dynamic Test.*

(1) *Test Setup and Directions for Full Vehicle Test.*

(i) Test Setup.

(A) Rigidly secure the full vehicle to an acceleration device that, when accelerated together, will assure that all points on the crash pulse curve are within the corridor defined in Table 1 and Figure 5.

(B) Install the equipment used to record door opening (doors may be tethered to avoid damaging the recording equipment).

(C) Close the door(s) to be tested and ensure that the door latch(es) is in the fully-latched position, that the door(s) is unlocked, and that all windows, if provided, on the door(s) are closed.

(ii) Test Directions. (*See* Figure 6).

(A) Longitudinal Setup 1. Orient the vehicle so that its longitudinal axis is aligned with the axis of the acceleration device, simulating a frontal impact.

(B) Longitudinal Setup 2. Orient the vehicle so that its longitudinal axis is aligned with the axis of the acceleration device, simulating a rear impact.

(C) Transverse Setup 1. Orient the vehicle so that its transverse axis is aligned with the axis of the acceleration device, simulating a driver-side impact.

(D) Transverse Setup 2. (Only for vehicles having different door arrangements on each side.) Orient the vehicle so that its transverse axis is aligned with the axis of the acceleration device, simulating a side impact in the direction opposite to that described in paragraph (*C*).

(2) *Test Setup and Directions for Door Test.*

(i) Test Setup.

(A) Mount the door assemblies, consisting of at least the door latch(es), exterior door handle(s) with mechanical latch operation, interior door opening lever(s), and locking device(s), either separately or combined to a test fixture. Each door and striker shall be mounted to the test fixture to correspond to its orientation on the vehicle and to the directions specified in paragraph (b)(1)(ii) of this section.

(B) Mount the test fixture to the acceleration device, and install the equipment used to record door opening.

(C) Ensure that the door latch is in the fully-latched position, that the door is tethered and unlocked, and that any windows are closed.

(ii) Test Directions. (*See* Figure 6)

(A) Longitudinal Setup 1. Orient the door subsystem(s) on the acceleration device in the direction of a frontal impact.

(B) Longitudinal Setup 2. Orient the door subsystem(s) on the acceleration device in the direction of a rear impact.

(C) Transverse Setup 1. Orient the door subsystem(s) on the acceleration device in the direction of a driver-side impact.

(D) Transverse Setup 2. Orient the door subsystem(s) on the acceleration device in the direction opposite to that described in paragraph (C).

(E) Vertical Setup 1 (back doors only). Orient the door subsystem(s) on the acceleration device so that its vertical axis (when mounted in the vehicle) is aligned with the axis of the acceleration device, simulating a rollover impact where the force is applied in the direction from the top to the bottom of the door (when mounted in a vehicle).

(F) Vertical Setup 2 (back doors only). Orient the door subsystem(s) on the acceleration device so that its vertical axis (when mounted in the vehicle) is aligned with the axis of the acceleration device, simulating a rollover impact where the force is applied in the direction opposite to that described in paragraph (b)(2)(ii)(E) of this section.

(3) *Test Operation.*

(i) Maintaining a minimum acceleration level of 30 g for a period of at least 30 ms, while keeping the acceleration within the pulse corridor defined in Table 1 and Figure 5, accelerate the acceleration device in the following directions:

(A) For Full Vehicle Tests, in the directions specified in S5.1.1.4(b)(1)(ii)(A) through S5.1.1.4(b)(1)(ii)(D).

(B) For Door Tests,in the directions specified in S5.1.1.4(b)(2)(ii)(A) through S5.1.1.4(b)(2)(ii)(F).

(ii) Check recording device for door opening and/or closure during the test.

(iii) If at any point in time, the pulse exceeds 36 g and the test requirements are fulfilled, the test shall be considered valid.

S5.1.2 *Door Hinges.* Compliance with S4.1.2 is demonstrated in accordance with the following:

S5.1.2.1 *Multiple Hinge Evaluation.*

S5.1.2.1.1 *Longitudinal Load Test.*

(a) Attach the hinge system to the mounting provision of the test fixture illustrated in Figure 7. Hinge attitude must simulate vehicle position (door fully closed) relative to the hinge centerline. For test purposes, the distance between the extreme ends of one hinge in the system to the extreme end of another hinge in the system is to be set at 406 mm ± 4 mm. The load is to be applied equidistant between the linear center of the engaged portions of the hinge pin and through the centerline of the hinge pin in the longitudinal vehicle direction (*see* figure 8).

(b) Apply the test load at a rate not to exceed 5 mm/min until the required load has been achieved. Record maximum load achieved.

S5.1.2.1.2 *Transverse Load Test.*

(a) Attach the hinge system to the mounting provisions of the test fixture illustrated in figure 7. Hinge attitude must simulate vehicle position (door fully closed) relative to the hinge centerline. For test purposes, the distance between the extreme ends of one hinge in the system to the extreme opposite end of another hinge in the system is to be set at 406 mm ± 4mm. The load is to be applied equidistant between the linear center of the engaged portions of the hinge pins and through the centerline of the hinge pin in the transverse vehicle direction (*see* figure 8).

(b) Apply the test load at a rate not to exceed 5 mm/min until the required load has been achieved. Record maximum load achieved.

S5.1.2.2 *Vertical Load Test* (back doors only).

(a) Attach the hinge system to the mounting provisions of the test fixture illustrated in figure 7. Hinge attitude must simulate vehicle position (door fully closed) relative to the hinge centerline. For test purposes, the distance between the extreme ends of one hinge system in the system to the extreme opposite end of another hinge system is to be set at 406 mm ± 4 mm. The load is to be applied through the centerline of the hinge pin in a direction orthogonal to the longitudinal and transverse loads (*see* figure 8).

(b) Apply the test load at a rate not to exceed 5 mm/min until the required load has been achieved. Failure consists of a separation of either hinge. Record the maximum load achieved.

S5.1.2.3 *Single Hinge Evaluation.* In some circumstances, it may be necessary to test the individual hinges of a hinge system. In such cases, the results for an individual hinge, when tested in accordance with the procedures below, shall be such as to indicate that system requirements in S4.1.2 are met. (For example, an individual hinge in a two-hinge system must be capable of withstanding 50 percent of the load requirements of the total system.)

(a) *Longitudinal Load.* Attach the hinge system to the mounting provision of the test fixture illustrated in figure 7. Hinge attitude must simulate the vehicle position (door fully closed) relative to the hinge centerline. For test purposes, the load is to be applied equidistant between the linear center of the engaged portions of the hinge pin and through the centerline of the hinge pin in the longitudinal vehicle direction. Apply the test load at a rate not to exceed 5 mm/min until the required load has been achieved. Failure consists of a separation of either hinge. Record maximum load achieved.

(b) *Transverse Load.* Attach the hinge system to the mounting provision of the test fixture illustrated in figure 7. Hinge attitude must simulate the vehicle position (door fully closed) relative to the hinge centerline. For test purposes, the load is to be applied equidistant between the linear center of the engaged portions of the hinge pin and through the centerline of the hinge pin in the transverse vehicle direction. Apply the test load at a rate not to exceed 5 mm/min until the required load has been achieved. Failure consists of a separation of either hinge. Record maximum load achieved.

(c) *Vertical Load.* Attach the hinge system to the mounting provision of the test fixture illustrated in figure 7. Hinge attitude must simulate the vehicle position (door fully closed) relative to the hinge centerline. For test purposes, the load is to be applied centerline of the hinge pin in a direction orthogonal to the longitudinal and transverse loads. Apply the test load at a rate not to exceed 5 mm/min until the required load has been achieved. Failure consists of a separation of either hinge. Record maximum load achieved.

S5.1.2.4 For piano-type hinges, the hinge spacing requirements are not applicable and arrangement of the test fixture is altered so that the test forces are applied to the complete hinge.

S5.2 *Sliding Side Doors.*

S5.2.1 *Door Latches.*

S5.2.1.1 *Load Test One Force Application.* Compliance with S4.2.1.1 is demonstrated in accordance with the test procedures specified in S5.1.1.1.

S5.2.1.2 *Load Test Two Force Application.* Compliance with S4.2.1.2 is demonstrated in accordance with the test procedures specified in S5.1.1.2.

S5.2.1.3 [Reserved]

S5.2.1.4 *Inertial Force Application.* Compliance with 4.2.1.3 is demonstrated in accordance with the test procedures specified in S5.1.1.4.

S5.2.2 *Door System.* Compliance with S4.2.2 is demonstrated in accordance with the following:

S5.2.2.1 Tests are conducted using a full vehicle with the sliding door and its retention components.

S5.2.2.2. The test is conducted using two force application devices capable of applying the outward transverse forces specified in S5.2.2.4. The test setup is shown in figure 9. The force application system shall include the following:

(a) Two force application plates.

(b) Two force application devices capable of applying the outward transverse load requirements for a minimum displacement of 300 mm.

(c) Two load cells of sufficient capacity to measure the applied loads specified in S5.2.2.4.

(d) Two linear displacement measurement devices required for measuring force application device displacement during the test.

(e) Equipment for measuring at least 100 mm of separation between the interior of the door and the exterior edge of the doorframe, while respecting all relevant safety and health requirements.

S5.2.2.3 *Test Setup.*

(a) Remove all interior trim and decorative components from the sliding door assembly.

(b) Remove seats and any interior components that may interfere with the mounting and operation of the test equipment.

(c) Mount the force application devices and associated support structure to the floor of the test vehicle.

(d) Determine the forward and aft edge of the sliding door, or its adjoining vehicle structure, that contains a latch/striker.

(e) Close the sliding door, ensuring that all door retention components are fully engaged.

(f) For any tested door edge that contains one latch/striker, the following set-up procedures are used:

(1) The force application plate is 150 mm in length, 50 mm in width, and at least 15 mm in thickness.

(2) Place the force application device and force application plate against the door so that the applied force is perpendicular to the vertical longitudinal plane that passes through the vehicle's longitudinal centerline, and vertically centered on the door-mounted portion of the latch/striker.

(3) The force application plate is positioned as close to the edge of the door as possible. It is not necessary for the force application plate to be vertical.

(g) For any tested door edge that contains more than one latch/striker, the following setup procedures are used:

(1) The force application plate is 300 mm in length, 50 mm in width, and at least 15 mm in thickness.

(2) Place the force application device and force application plate against the door so that the applied force is perpendicular to the vertical longitudinal plane that passes through the vehicle's longitudinal centerline, and vertically centered on a point mid-way between the outermost edges of the latch/striker assemblies.

(3) The force application plate is positioned as close to the edge of the door as possible. It is not necessary for the force application plate to be vertical.

(h) For any tested door edge that does not contain at least one latch/striker, the following set-up procedures are used:

(1) The force application plate is 300 mm in length, 50 mm in width, and at least 15 mm in thickness.

(2) Place the force application device and force application plate against the door so that the applied force is perpendicular to the vertical longitudinal plane that passes through horizontal the vehicle's longitudinal centerline, and vertically centered on a point mid-way along the length of the door edge ensuring that the loading device avoids contact with the window glazing.

(3) The force application plate is positioned as close to the edge of the door as possible. It is not necessary for the force application plate to be vertical.

(i) The door is unlocked. No extra fixtures or components may be welded or affixed to the sliding door or any of its components.

(j) Attach any equipment used for measuring door separation that will be used to determine separation levels during the test procedure.

(k) Place the load application structure so that the force application plates are in contact with the interior of the sliding door.

S5.2.2.4 *Test Procedure.*

(a) Move each force application device at a rate of 20–90 mm per minute until a force of 9,000 N is achieved on each force application device or until either force application device reaches a total displacement of 300 mm.

(b) If one of the force application devices reaches the target force of 9,000 N prior to the other, maintain the 9,000 N force with that force application device until the second force application device reaches the 9,000 N force.

(c) Once both force application devices have achieved 9,000 N each, stop forward movement of the force application devices and hold the resulting load for a minimum of 10 seconds.

(d) Maintain the force application device position of paragraph (c) and measure the separation between the exterior edge of the doorframe and the interior of the door along the perimeter of the door.

S5.3 [Reserved]

BILLING CODE 4910–59–P

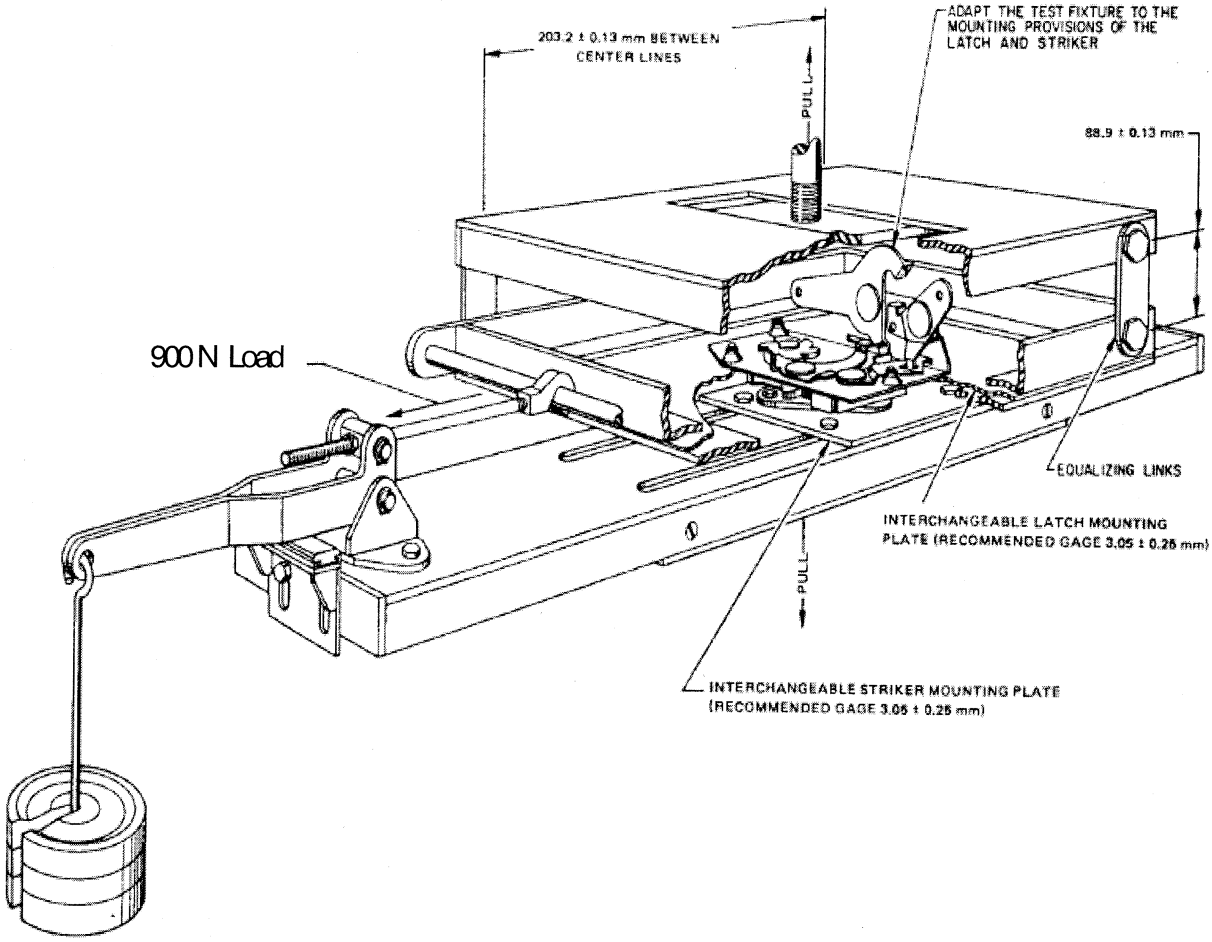

Figure1 – Door Latch - Tensile Testing Fixture for Load Test 1

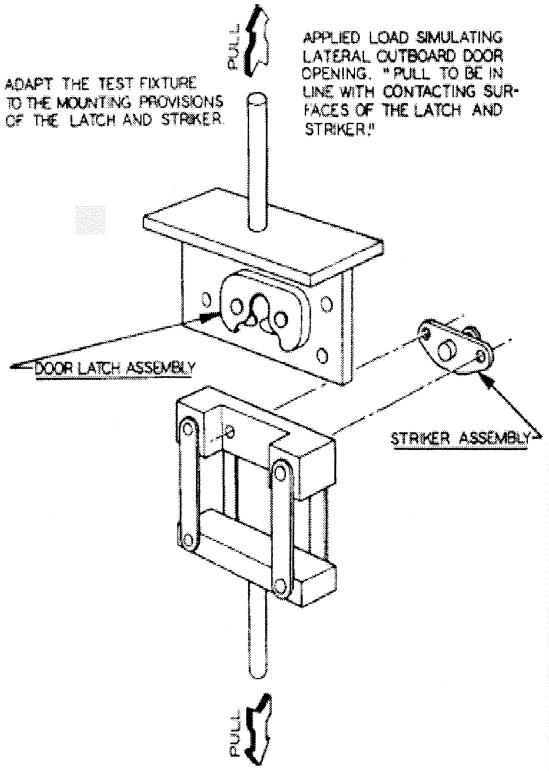

Figure 2 – Door Latch – Tensile Testing Fixture for Load Test 2

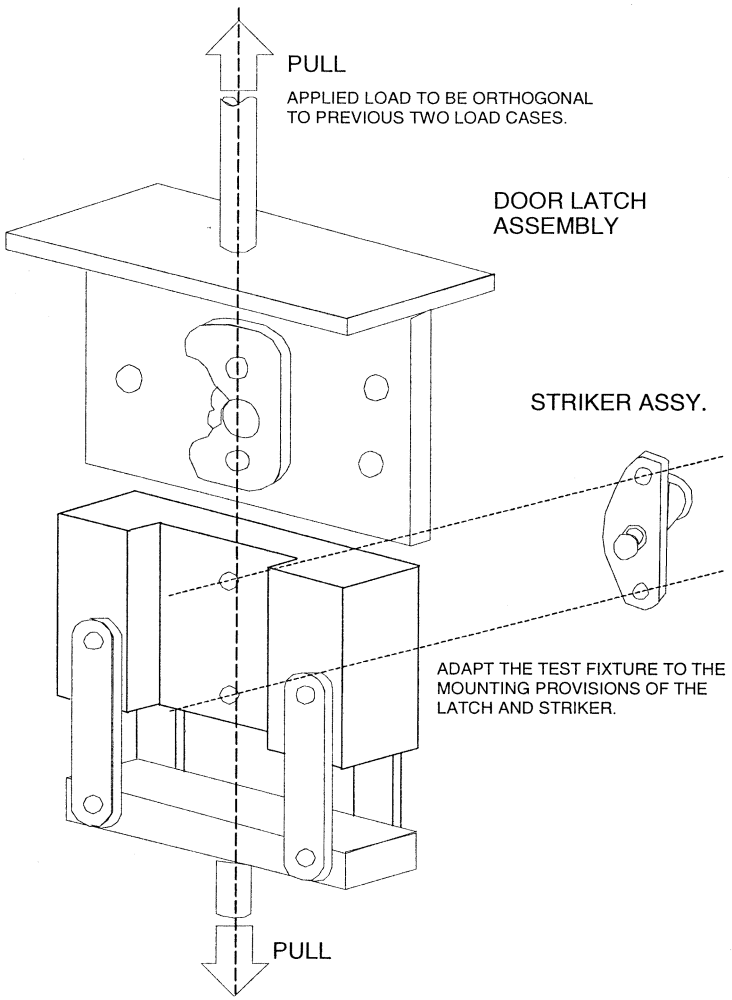

Figure 3 - Door Latch – Tensile Testing Fixture for Load Test 3 (Back Doors Only)

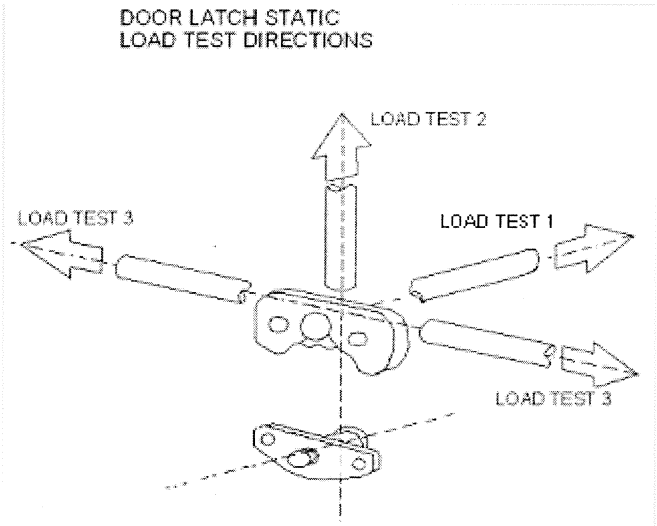

Figure 4 – Door Static Load Test Directions

Upper Bound			Lower Bound		
Point	Time (ms)	Acceleration (g)	Point	Time (ms)	Acceleration (g)
A	0	6	E	5	0
B	20	36	F	25	30
C	60	36	G	55	30
D	100	0	H	70	0

Acceleration Pulse Corridor
Table 1

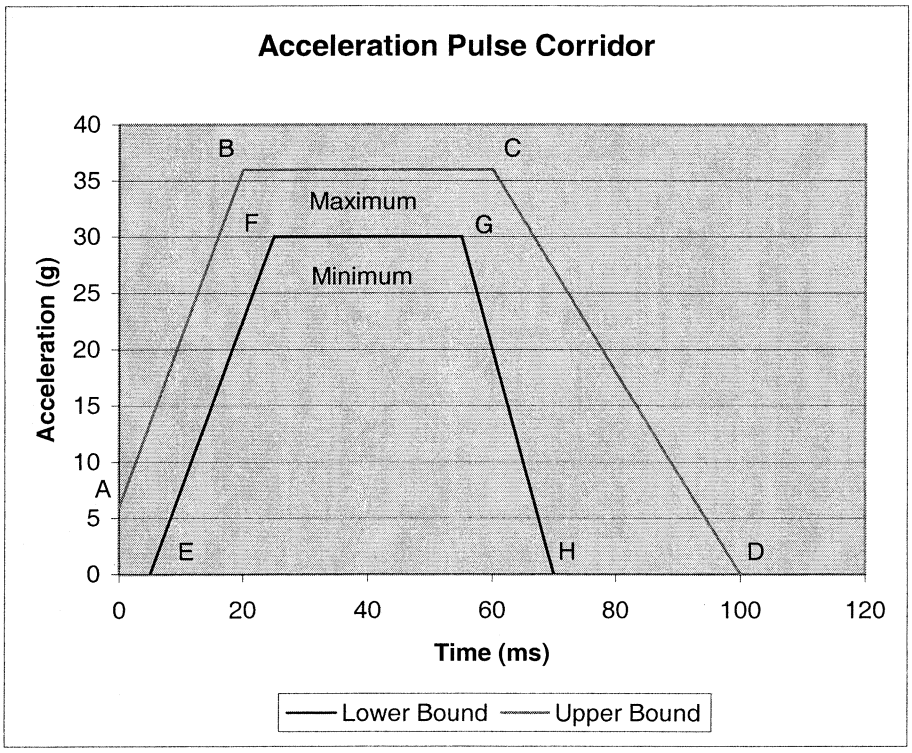

Figure 5 – Acceleration Pulse

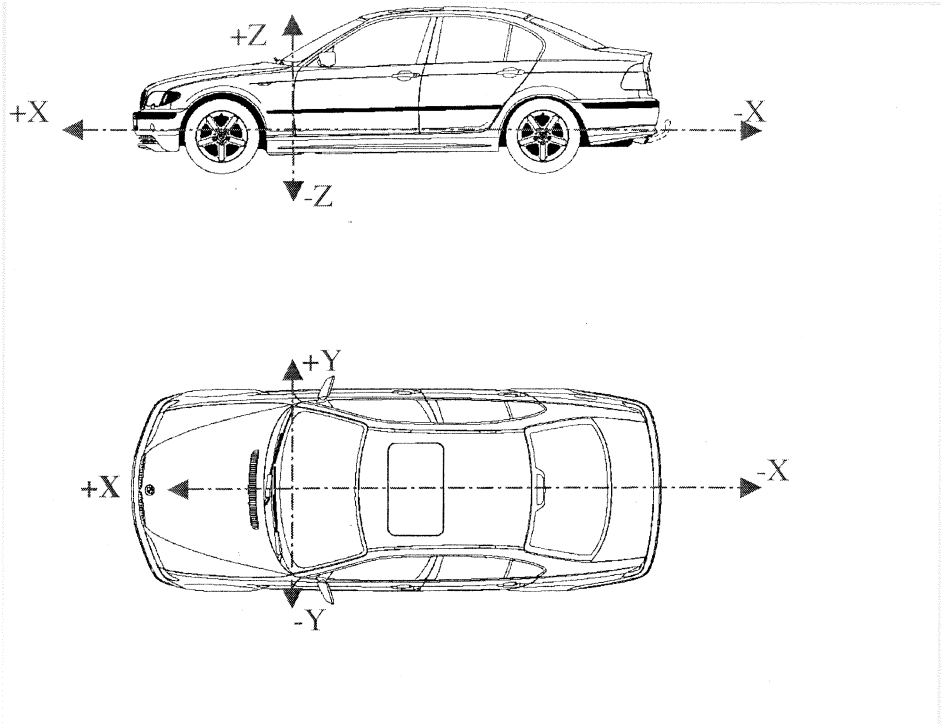

X = longitudinal direction
Y = transversal direction
Z = vertical direction

Figure 6 - Vehicle Coordinate Reference System for Inertial Testing

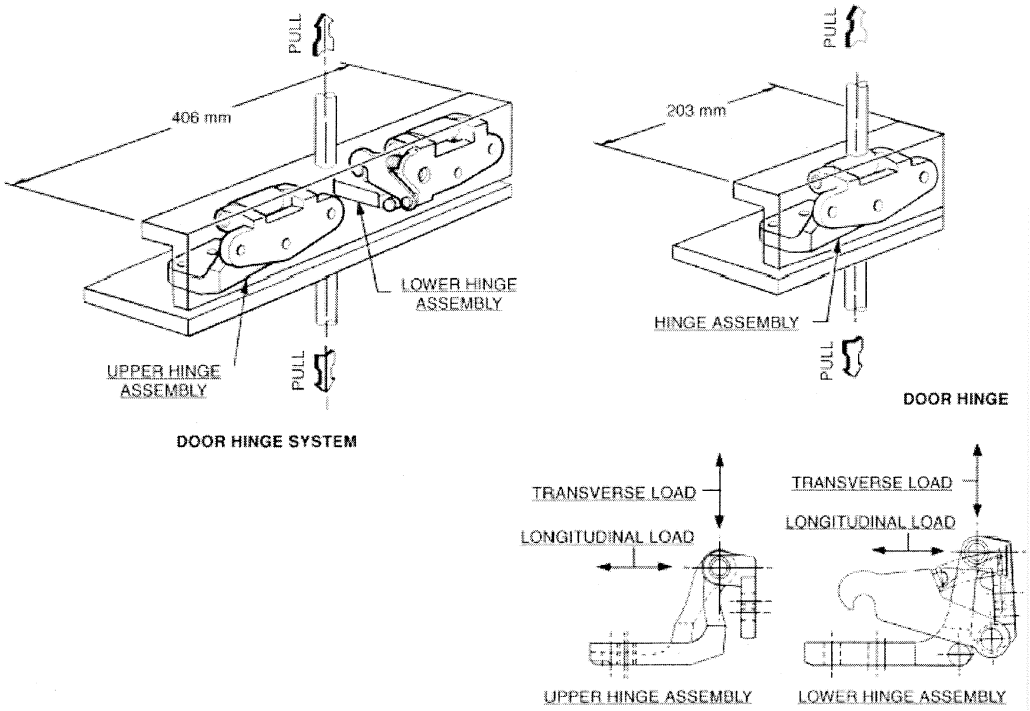

Figure 7 – Static test fixtures for back doors

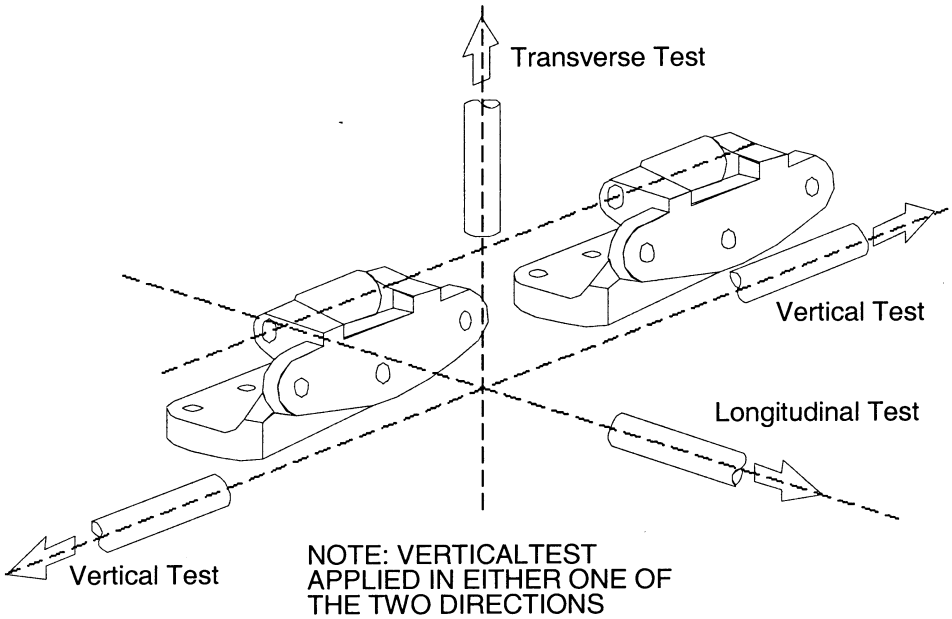

Figure 8 – Static load test directions for back doors

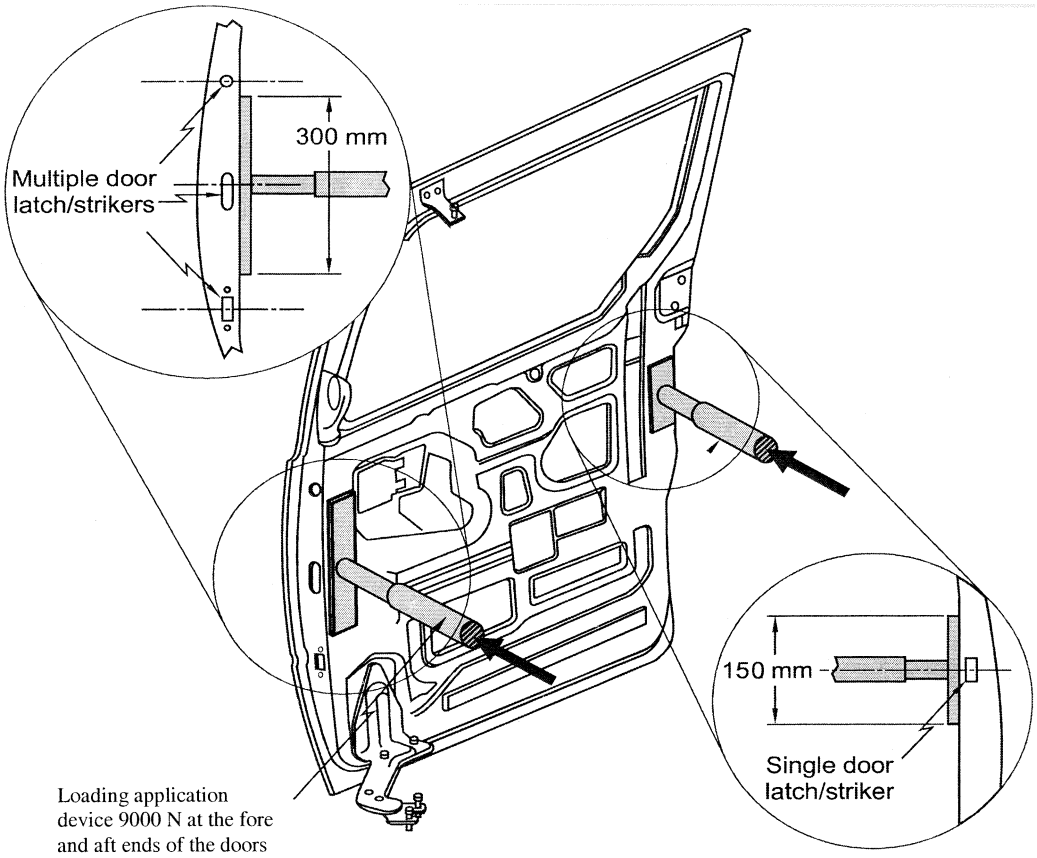

Figure 9 – Sliding Side Door Full Vehicle Test Procedure
(Note: Sliding door is shown separated from the vehicle)

Issued on: December 7, 2004.

Stephen R. Kratzke,

Associate Administrator for Rulemaking.

[FR Doc. 04–27215 Filed 12–14–04; 8:45 am]

BILLING CODE 4910–59–C

Notices

Federal Register

Vol. 69, No. 240

Wednesday, December 15, 2004

This section of the FEDERAL REGISTER contains documents other than rules or proposed rules that are applicable to the public. Notices of hearings and investigations, committee meetings, agency decisions and rulings, delegations of authority, filing of petitions and applications and agency statements of organization and functions are examples of documents appearing in this section.

DEPARTMENT OF AGRICULTURE

Agricultural Marketing Service

[Docket No. PY–05–002]

Notice of Request for Extension and Revision of a Currently Approved Information Collection

AGENCY: Agricultural Marketing Service, USDA.

ACTION: Notice and request for comments.

SUMMARY: In accordance with the Paperwork Reduction Act of 1995 (44 U.S.C. Chapter 35), this notice announces the intention of the Agricultural Marketing Service (AMS) to request an extension for and revision to a currently approved information collection in support of the Regulations Governing the Voluntary Grading of Shell Eggs.

DATES: Comments on this notice must be received by February 14, 2005.

ADDITIONAL INFORMATION: Contact Shields Jones, Standardization Branch, Poultry Programs, Agricultural Marketing Service, U.S. Department of Agriculture, 1400 Independence Avenue, SW., STOP 0259, Washington, DC 20050–0259, (202) 720–3506.

SUPPLEMENTARY INFORMATION:

Title: Regulations Governing the Voluntary Grading of Shell Eggs—7 CFR Part 56.

OMB Number: 0581–0128.

Expiration Date of Approval: July 31, 2005.

Type of Request: Extension and revision of a currently approved information collection.

Abstract: The Agricultural Marketing Act of 1946 (60 Stat. 1087–1091, as amended; 7 U.S.C. 1621–1627) (AMA) directs and authorizes the Department of Agriculture (USDA) to develop standards of quality, grades, grading programs, and services which facilitate trading of agricultural products and assure consumers of quality products which are graded and identified under USDA programs.

To provide programs and services, section 203(h) of the AMA directs and authorizes USDA to inspect; certify and identify; and identify the grade, class, quality, quantity, and condition of agricultural products under such rules and regulations as prescribed, including assessment and collection of fees for the cost of the service.

The regulations in 7 CFR part 56 provide a voluntary program for grading shell eggs on the basis of U.S. standards, grades, and weight classes. In addition, the shell egg industry and users of the products have requested that other types of voluntary services be developed and provided under these regulations; *e.g.*, contract and specification acceptance services and certification of quantity. This voluntary grading service is available on a resident basis or on an as-needed basis. A fee for service is paid by the user.

Since this is a voluntary program, respondents need to request or apply for the specific service they wish, and in doing so, they provide information. Since the AMA requires that the cost of service be assessed and collected, information is collected to establish the Agency's cost.

The information collection requirements in this request are essential to carry out the intent of the AMA, to provide the respondents the type of service they request, and to administer the program.

The information collected is used only by authorized representatives of USDA (AMS, Poultry Programs' national staff; regional directors and their staffs; Federal-State supervisors and their staffs; and resident Federal-State graders, which includes State agencies). The information is used to administer and to conduct and carry out the grading services requested by the respondents. The Agency is the primary user of the information. Information is also used by each authorized State agency which has a cooperative agreement with AMS.

Estimate of Burden: Public reporting burden for this collection of information is estimated to average 0.232 hours per response.

Respondents: State or local governments, businesses or other for-profits, Federal agencies or employees, small businesses or organizations.

Estimated Number of Respondents: 623.

Estimated Number of Responses per Respondent: 36.87.

Estimated Total Annual Burden on Respondents: 5,319.96 hours.

Copies of this information collection can be obtained from Shields Jones, Standardization Branch, on (202) 720–3506.

Send comments regarding, but not limited to, the following: (a) Whether the collection of information is necessary for the proper performance of the functions of the agency, including whether the information will have practical utility; (b) the accuracy of the agency's estimate of burden including the validity of the methodology and assumptions used; (c) ways to enhance the quality, utility, and clarity of the information to be collected; or (d) ways to minimize the burden of the collection of information on those who are to respond, including through the use of appropriate automated, electronic, mechanical, or other technological collection techniques or other forms of information technology, to: David Bowden, Jr., Chief, Standardization Branch, Poultry Programs, Agricultural Marketing Service, U.S. Department of Agriculture, 1400 Independence Ave., SW., Stop 0259, Washington, DC 20250–0259. All comments received will be available for public inspection during regular business hours at the same address.

All responses to this notice will be summarized and included in the request for the Office of Management and Budget approval. All comments will also become a matter of public record.

Dated: December 10, 2004.

A.J. Yates,

Administrator, Agricultural Marketing Service.

[FR Doc. 04–27428 Filed 12–14–04; 8:45 am]

BILLING CODE 3410–02–P

DEPARTMENT OF AGRICULTURE

Agricultural Marketing Service

[Docket No. FV–04–319]

Fruit and Vegetable Industry Advisory Committee

AGENCY: Agricultural Marketing Service, USDA.

ACTION: Notice of public meeting.

SUMMARY: The purpose of this notice is to notify all interested parties that the Agricultural Marketing Service (AMS) will hold a Fruit and Vegetable Industry Advisory Committee (Committee) meeting that is open to the public. The U.S. Department of Agriculture (USDA) established the Committee to examine the full spectrum of issues faced by the fruit and vegetable industry and to provide suggestions and ideas to the Secretary of Agriculture on how USDA can tailor its programs to meet the fruit and vegetable industry's needs. This notice sets forth the schedule and location for the meeting.

DATES: Tuesday, January 11, 2005, from 8 a.m. to 1 p.m., and Wednesday, January 12, 2005, from 8 a.m. to 2 p.m. As part of the meeting, Committee members will tour the National Training and Development Center on Tuesday, January 11, 2005, from 2 p.m. to 4 p.m.

ADDRESSES: The Committee meeting will be held at the Hilton Hotel, 1767 King Street, Alexandria, VA. The tour of the National Training and Development Center will take place at 100 Riverside Parkway, Suite 101, Fredericksburg, VA.

FOR FURTHER INFORMATION CONTACT: Andrew Hatch, Designated Federal Official, USDA, AMS, Fruit and Vegetable Programs. Telephone: (202) 690–0182. Facsimile: (202) 720–0016. E-mail: *andrew.hatch@usda.gov.*

SUPPLEMENTARY INFORMATION: Pursuant to the Federal Advisory Committee Act (FACA) (5 U.S.C. App. II), the Secretary of Agriculture established the Committee in August 2001 to examine the full spectrum of issues faced by the fruit and vegetable industry and to provide suggestions and ideas to the Secretary on how USDA can tailor its programs to meet the fruit and vegetable industry's needs. The Committee was re-chartered in July 2003 and new members were appointed from industry nominations.

AMS Deputy Administrator for Fruit and Vegetable Programs, Robert C. Keeney, serves as the Committee's Executive Secretary. Representatives from USDA mission areas and other government agencies affecting the fruit and vegetable industry will be called upon to participate in the Committee's meetings as determined by the Committee Chairperson. AMS is giving notice of the Committee meeting to the public so that they may attend and present their recommendations. Reference the date and address section of this announcement for the time and place of the meeting.

Topics to be discussed include: Perishable Agricultural Commodities Act branch reorganization status and transportation issues, crop insurance, the Regulatory Flexibility Act, the school lunch procurement study, Fruit and Vegetable Dispute Resolution Corporation overview, and ways that USDA programs can encourage increased consumption of fruits and vegetables. Those parties that would like to speak at the meeting should register on or before January 5, 2005. To register as a speaker, please e-mail your name, affiliation, business address, e-mail address, and phone number to Mr. Andrew C. Hatch at: *andrew.hatch@usda.gov* or facsimile to (202) 720–0016. Speakers who have registered in advance will be given priority. Groups and individuals may submit comments for the Committee's consideration to the same e-mail address. The meeting will be recorded, and information about obtaining a transcript will be provided at the meeting.

The Secretary of Agriculture selected a diverse group of members representing a broad spectrum of persons interested in providing suggestions and ideas on how USDA can tailor its programs to meet the fruit and vegetable industry's needs. Equal opportunity practices were considered in all appointments to the Committee in accordance with USDA policies.

If you require special accommodations, such as a sign language interpreter, please use either contact name listed above.

Dated: December 10, 2004.

A.J. Yates,

Administrator, Agricultural Marketing Service.

[FR Doc. 04–27427 Filed 12–14–04; 8:45 am]

BILLING CODE 3410–02–P

DEPARTMENT OF COMMERCE

International Trade Administration

North American Free-Trade Agreement (NAFTA), Article 1904 NAFTA Panel Reviews; Decision of the Committee

AGENCY: NAFTA Secretariat, United States Section, International Trade Administration, Department of Commerce.

ACTION: Notice of corrected decision of Extraordinary Challenge Committee.

SUMMARY: On October 7, 2004 the Extraordinary Challenge Committee (ECC) issued its decision in the matter of Pure Magnesium from Canada, Secretariat File No. ECC–2003–1904–01USA. On November 12, 2004, the Extraordinary Challenge Committee issued a correction to their decision. The corrections do not alter the substance of the opinion.

FOR FURTHER INFORMATION CONTACT: Caratina L. Alston, United States Secretary, NAFTA Secretariat, Suite 2061, 14th and Constitution Avenue, Washington, DC 20230, (202) 482–5438.

Committee Decision: The Committee concluded that the panel manifestly exceeded its powers by failing to apply the correct standard of review; such action materially affected the Panel's decision, but; that the Panel's action did not threaten the integrity of the binational panel review process.

Accordingly the challenge was dismissed and by virtue of section 3 of NAFTA Annex 1904.13 the challenged panel decision stands affirmed. The Committee, however, discovered some minor errors in the decision and has provided a corrected version. Copies of the corrected decision are available from the NAFTA Secretariat.

Dated: December 7, 2004.

Caratina L. Alston,

United States Secretary, NAFTA Secretariat.

[FR Doc. E4–3673 Filed 12–14–04; 8:45 am]

BILLING CODE 3510–GT–P

DEPARTMENT OF COMMERCE

National Oceanic and Atmospheric Administration

Federal Consistency Appeal by Pedro Vidal From an Objection by the Puerto Rico Planning Board

AGENCY: National Oceanic and Atmospheric Administration (NOAA), Department of Commerce (Commerce).

ACTION: Notice of closure—administrative appeal decision record.

SUMMARY: This announcement provides notice that the decision record has been closed for an administrative appeal filed with the Department of Commerce by Pedro Vidal.

DATES: The decision record for the Pedro Vidal administrative appeal will close as of the date of publication of this notice.

ADDRESSES: Materials from the appeal record are available at the Office of the Assistant General Counsel for Ocean Services, National Oceanic and Atmospheric Administration, U.S. Department of Commerce, 1305 East-West Highway, Silver Spring, MD 20910.

FOR FURTHER INFORMATION CONTACT: Nancy Briscoe, Attorney-Adviser, NOAA Office of the General Counsel, 301–713–1219.

SUPPLEMENTARY INFORMATION: Pedro Vidal (Appellant) has filed a notice of appeal with the Secretary of Commerce (Secretary) pursuant to section 307(c)(3)(A) of the Coastal Zone Management Act of 1972 (CZMA), as amended, 16 U.S.C. 1456(c)(3)(A), and implementing regulations found at 15 CFR part 930, subpart H. Mr. Vidal appeals on objection raised by the Puerto Rico Planning Board to a consistency certification contained within Vidal's application for a U.S. Army Corps of Engineers permit necessary to reconstruct a stilt house destroyed by Hurricane George. The proposed project is located within the maritime-terrestrial zone, territorial waters and submerged lands of the Commonwealth of Puerto Rico.

The CZMA requires a notice be published in the **Federal Register**, indicating the date on which the decision record has been closed. A final decision on this appeal must be issued no later than 90 days after publication of this notice. 16 U.S.C. 1465(a). The deadline may be extended by publishing, within the 90-day period, a subsequent notice explaining why a decision cannot be issued within this time frame. In this event, a final decision must be issued no later than 45 days after publication of the subsequent notice. 16 U.S.C. 1465(b).

For additional information about this appeal contact Nancy Briscoe, 301–713–1219.

[Federal Domestic Assistance Catalog No. 11.419 Coastal Zone Management Program Assistance.]

Dated: December 6, 2004.

James R. Walpole,

General Counsel.

[FR Doc. 04–27415 Filed 12–14–04; 8:45 am]

BILLING CODE 3510–08–M

DEPARTMENT OF COMMERCE

National Oceanic and Atmospheric Administration

DEPARTMENT OF THE INTERIOR

U.S. Fish and Wildlife Service

[I.D. 100104A]

Notice of Intent to Conduct Public Scoping and Prepare an Environmental Impact Statement

AGENCIES: National Marine Fisheries Service (NMFS), National Oceanic and Atmospheric Administration, Commerce; U.S. Fish and Wildlife Service (USFWS), Interior.

ACTION: Notice of intent to conduct public scoping and prepare an Environmental Impact Statment related to the Sequim-Dungeness Valley Agricultural Water Users Association's Conservation Plan.

SUMMARY: Pursuant to the National Environmental Policy Act (NEPA) this notice advises the public that the USFWS and NMFS (collectively, the Services) intend to gather information necessary to prepare an Environmental Impact Statement (EIS). The EIS will analyze the potential approval of a Conservation Plan (CP) and issuance of two incidental take permits (ITP); one issued by NFMS and one by the USFWS. The ITP applicant is the Sequim-Dungeness Valley Agricultural Water Users Association (the Association) of Sequim, Washington. The ITP would allow take of four threatened species and nine unlisted species that may be affected by the Association's activities in accordance with section 10(a) of the Endangered Species Act of 1973, as amended (ESA).

DATES: Written comments are encouraged, and should be received on or before February 14, 2005.

ADDRESSES: Address comments and requests for information related to preparation of the EIS, or requests to be added to the mailing list for this project, to Tim Romanski, USFWS, 510 Desmond Drive S.E., Suite 102, Lacey, WA 98503–1263; facsimile (360)753–9518; or to Matt Longenbaugh, NMFS, 510 Desmond Drive S.E., Suite 103, Lacey, WA 98503–1273; facsimile (360)753–9517. Comments may be submitted by e-mail to the following address: *SDVAWUA-CP.nwr@noaa.gov*. In the subject line of the e-mail, include the document identifier: The Sequim Association CP - EIS. Comments and materials received will be available to public inspection, by appointment, during normal business hours at the above addresses.

FOR FURTHER INFORMATION CONTACT: Tim Romanski, USFWS, (360)753–5823; or Matt Longenbaugh, NMFS, (360)753–7761.

SUPPLEMENTARY INFORMATION:

Background

The National Environmental Policy Act (NEPA) requires Federal agencies to conduct an environmental analysis of their proposed actions to determine if the actions may affect the human environment. The Services expect to take action on ESA section 10(a)(1)(B) permit applications anticipated from the Association. Therefore, the Services are seeking public input on the scope of the required NEPA analysis, including the range of reasonable alternatives and associated impacts of any alternatives.

Section 9 of the ESA and implementing regulations prohibit the ''taking'' of a species listed as endangered or threatened. The term take is defined under the ESA as to mean harass, harm, pursue, hunt, shoot, wound, kill, trap, capture, or collect, or attempt to engage in any such conduct (16 U.S.C. 1532(19)). Harm is defined by the USFWS to include significant habitat modification or degradation where it actually kills or injures wildlife by significantly impairing essential behavioral patterns, including breeding, feeding, and sheltering (50 CFR 17.3). NMFS' definition of harm includes significant habitat modification or degradation where it actually kills or injures fish or wildlife by significantly impairing essential behavioral patterns, including breeding, feeding, spawning, migrating, rearing, and sheltering (64 FR 60727; November 8, 1999).

Section 10 of the ESA contains provisions for the issuance of an ITP to non-Federal landowners for the take of endangered and threatened species, provided that all permit issuance criteria are met, including the requirement that the take is incidental to otherwise lawful activities, and will not appreciably reduce the likelihood of the survival and recovery of the species in the wild. In addition, the applicant must prepare and submit to the Services for approval, a CP containing a strategy for minimizing and mitigating the take associated with the proposed activities to the maximum extent practicable. The applicant must also ensure that adequate monitoring and funding for the CP will be provided.

To pursue regulatory certainty of its existing and future water supplies, the Association is seeking an ITP that would provide long-term assurances for the reliability of water supplies. The Association needs an ITP because some of its activities have the potential to take listed species. The Association is composed of seven irrigation districts and private irrigation companies in the Sequim-Dungeness Valley area. The seven irrigation districts include Agnew Irrigation District, Clallam Ditch Company, Cline Irrigation District, Dungeness Irrigation Company, Dungeness Irrigation District, Highland Irrigation District, and Sequim-Prairie Tri-Irrigation Company. These seven irrigation districts divert water primarily from intakes in the Dungeness River and deliver water to users throughout the area.

The ITP application is related to the operation and maintenance of water

diversions and conveyance facilities on the Dungeness River (covered activities) near the City of Sequim in Clallam County, Washington. These covered activities can be summarized as follows:

- Water diversion and conveyance;
- Operation and maintenance of diversion facilities such as diversion intakes, intake channels, headgates, fish screens, and bypass channels;
- Maintenance of canals and laterals;
- Discharge of tailwater (including both irrigation water and intercepted stormwater);
- Releases of intercepted stormwater into selected creeks at points other than tailwater discharge points when stormwater flows exceed ditch capacity; and
- Construction activities related to capital projects provided in the CP.

The Association has a board of directors representing respective districts and companies, and appoints a Water Coordinator to assist in overall water resource management. The Association has the ability to adopt policies, rules, and regulations that apply to all of its members, and retains the authority to enter into agreements with outside organizations.

The Association has informed the Services of its proposal to submit a conservation plan (CP) and application for an ITP under section 10(a)(1)(B) of the ESA. The proposed CP and ITP would cover various activities relating to the Association's continued diversion and delivery of water from the Dungeness River, Washington, and other sources, as well as planned infrastructure improvements intended to conserve listed and unlisted species. The geographic areas to be covered are located in eastern Clallam County, Washington. More information on the geographic area can be found at an Internet site maintained by Clallam County:*http://www.clallam.net/Maps/html/mapindex__e.htm*.

Species for which the Association seeks ITP coverage include four ESA-listed threatened species (Coastal-Puget Sound bull trout, Puget Sound chinook salmon, Hood Canal summer-run chum salmon, bald eagle) and nine unlisted species that may be affected by the Association's activities in the Dungeness River Watershed.

To obtain an ITP, the Association must prepare a CP that meets the issuance criteria established by the Services (50 CFR 17.22 and 222.307). Federal approval of an ITP and associated CP require environmental review under the NEPA. The Services will complete an EIS evaluating the environmental effects of the Association's operations under its proposed CP.

Under NEPA, a reasonable range of alternatives to a proposed project must be developed and considered in the Services' environmental review. At a minimum, the alternatives developed must include: (1) No Action alternative, and (2) the Proposed Action, with thorough descriptions of its management features and anticipated resource conservation benefits and potential impacts.

The Services are currently in the process of developing alternatives for analysis, and have considered analyzing the following:

Alternative 1: No Action: Under the No Action Alternative, an ITP would not be issued by the Services, there would not be a commitment to implement the CP (although it is expected that improvements will be made on an uncertain schedule), and ESA assurances under section 10 would not be provided to the Association;

Alternative 2: The Proposed Action - Implement the CP: There would be full implementation of the CP, which includes a variety of infrastructure improvement projects, and operation and maintenance procedures to improve in-stream flow and to reduce other impacts from irrigation structures and practices;

Alternative 3: Certain water conservation projects contained under the Proposed Action (potentially impacting certain wetlands) would not be implemented (i.e., partially implementing the CP);

Alternative 4: The CP would be modified by adding the piping of nearly all of the ditches in the Association members' irrigation systems, approximately 2 miles (3.2 kilometers) of small portions of ditches.

Additional project alternatives may be developed based on input received from this and future scoping during development of the EIS.

The Services provide this notice to: (1) advise other agencies and the public of our intentions; and (2) obtain suggestions and information on the scope of issues to include in the EIS. The Services are considering whether there is sufficient interest to schedule scoping meetings. If meetings are held, details of where and when will be provided by future notice so the public will be able to plan to participate. Comments and suggestions are invited from all interested parties to ensure that the full range of issues related to this proposed action and all significant issues are identified. The Services request that comments be as specific as possible. In particular, we request information regarding: the direct, indirect, and cumulative impacts that implementation of the proposed CP could have on endangered and threatened and other covered species, and their communities and habitats; other possible alternatives that meet the purpose and need; potential adaptive management and/or monitoring provisions; funding issues; existing environmental conditions in the City of Sequim area of Clallam County; other plans or projects that might be relevant to this proposed project; and minimization and mitigation efforts.

In addition to considering potential impacts on listed and other covered species and their habitats, the EIS could include information on potential impacts resulting from alternatives on other components of the human environment. These other components could include air quality, water quality and quantity, geology and soils, cultural resources, socioeconomic resources, vegetation, and environmental justice.

Comments or questions concerning this proposed action and the environmental review should be directed to the USFWS or NMFS at the addresses or telephone numbers provided above. All comments and material received, including names and addresses, will become part of the administrative record and may be released to the public.

The environmental review of this project will be conducted in accordance with the requirements of the National Environmental Policy Act of 1969, as amended (42. U.S.C. 4321 *et seq.*), National Environmental Policy Act Regulations (40 CFR 1500–1508), other appropriate Federal laws and regulations, and policies and procedures of the Services for compliance with those regulations.

Dated: November 30, 2004.

David J. Wesley,

Deputy Regional Director, Fish and Wildlife Service, Region 1, Portland, Oregon.

Dated:

Nancy K. Daves,

Acting Chief, Endangered Species Division, Office of Protected Resources, National Marine Fisheries Service.

[FR Doc. 04–27433 Filed 12–14–04; 8:45 am]

BILLING CODES 3510–22–S, 4310 55 S

DEPARTMENT OF COMMERCE

National Oceanic and Atmospheric Administration

[I.D. 110404C]

Endangered Species; File No. 1510

AGENCY: National Marine Fisheries Service (NMFS), National Oceanic and Atmospheric Administration (NOAA), Commerce.

ACTION: Receipt of application.

SUMMARY: Notice is hereby given that the Liberty Science Center (Richard Weddle, Principal Investigator), 251 Phillip Street, Jersey City, New Jersey 07305, has applied in due form for a permit to take shortnose sturgeon (*Acipenser brevirostrum*) for purposes of enhancement through educational display.

DATES: Written, telefaxed, or e-mail comments must be received on or before January 14, 2005.

ADDRESSES: The application and related documents are available for review upon written request or by appointment in the following office(s):

Permits, Conservation and Education Division, Office of Protected Resources, NMFS, 1315 East-West Highway, Room 13705, Silver Spring, MD 20910; phone (301)713–2289; fax (301)713–0376; and

Northeast Region, NMFS, One Blackburn Drive, Gloucester, MA 01930–2298; phone (978)281–9200; fax (978)281–9371.

Written comments or requests for a public hearing on this application should be mailed to the Chief, Permits, Conservation and Education Division, F/PR1, Office of Protected Resources, NMFS, 1315 East-West Highway, Room 13705, Silver Spring, MD 20910. Those individuals requesting a hearing should set forth the specific reasons why a hearing on this particular request would be appropriate.

Comments may also be submitted by facsimile at (301)713–0376, provided the facsimile is confirmed by hard copy submitted by mail and postmarked no later than the closing date of the comment period.

Comments may also be submitted by e-mail. The mailbox address for providing email comments is *NMFS.Pr1Comments@noaa.gov*. Include in the subject line of the e-mail comment the following document identifier: File No. 1510.

FOR FURTHER INFORMATION CONTACT: Jennifer Jefferies or Amy Sloan, (301)713–2289.

SUPPLEMENTARY INFORMATION: The subject permit is requested under the authority of the Endangered Species Act of 1973, as amended (ESA; 16 U.S.C. 1531 *et seq.*) and the regulations governing the taking, importing, and exporting of endangered and threatened species (50 CFR 222–226).

The Liberty Science Center proposes to receive and use five captive-bred, non-releaseable shortnose sturgeon for the purpose of educational display. The proposed project of displaying endangered cultured shortnose sturgeon responds directly to a recommendation from the NMFS recovery outline for this species. In addition, the facility would create a public education program and exhibit to increase awareness of the shortnose sturgeon and its status. The proposed project would educate the public on shortnose sturgeon life history and the reasons for its declining numbers.

Dated: December 9, 2004.

Jennifer Skidmore,

Acting Chief, Permits, Conservation and Education Division, Office of Protected Resources, National Marine Fisheries Service.

[FR Doc. 04–27430 Filed 12–14–04; 8:45 am]

BILLING CODE 3510–22–S

DEPARTMENT OF COMMERCE

National Oceanic and Atmospheric Administration

[I.D. 120604A]

Marine Mammals; File No. 87–1593

AGENCY: National Marine Fisheries Service (NMFS), National Oceanic and Atmospheric Administration (NOAA), Commerce.

ACTION: Issuance of permit amendment.

SUMMARY: Notice is hereby given that Daniel Costa, Ph.D., University of California, Santa Cruz, Long Marine Lab, 100 Shaffer Road, Santa Cruz, CA 95060, has been issued an amendment to Permit No. 87–1593 conduct scientific research on southern elephant seals (*Mirounga leonina*).

ADDRESSES: The permit and related documents are available for review upon written request or by appointment in the following office(s):

Permits, Conservation and Education Division, Office of Protected Resources, NMFS, 1315 East-West Highway, Room 13705, Silver Spring, MD 20910; phone (301)713–2289; fax (301)713–0376; and

Southwest Region, NMFS, 501 West Ocean Blvd., Suite 4200, Long Beach, CA 90802–4213; phone (562)980–4001; fax (562)980–4018.

FOR FURTHER INFORMATION CONTACT: Amy Sloan or Ruth Johnson, (301)713–2289.

SUPPLEMENTARY INFORMATION: On July 15, 2004, notice was published in the **Federal Register** (69 FR 42424) that a request for a permit amendment to take the species identified above had been submitted by the above-named individual. The requested amendment has been issued under the authority of the Marine Mammal Protection Act of 1972, as amended (16 U.S.C. 1361 *et seq.*), and the Regulations Governing the Taking and Importing of Marine Mammals (50 CFR part 216).

The permit holder is authorized to capture, sedate, tag (flipper and instrument), sample, and release up to 30 adult southern elephant seals; tag and weigh up to 50 immature elephant seals; conduct population censussing; and incidentally disturb up to 100 elephant seals during research. The purpose of this project is to examine the foraging behavior and habitat utilization of the southern elephant seal in the Western Antarctic Peninsula.

In compliance with the National Environmental Policy Act of 1969 (42 U.S.C. 4321 *et seq.*), a final determination has been made that the activity proposed is categorically excluded from the requirement to prepare an environmental assessment or environmental impact statement.

Dated: December 8, 2004.

Stephen L. Leathery,

Chief, Permits, Conservation and Education Division, Office of Protected Resources, National Marine Fisheries Service.

[FR Doc. 04–27431 Filed 12–14–04; 8:45 am]

BILLING CODE 3510–22–S

DEFENSE NUCLEAR FACILITIES SAFETY BOARD

[Recommendation 2004–2]

Active Confinement Systems

AGENCY: Defense Nuclear Facilities Safety Board.

ACTION: Notice, recommendation.

SUMMARY: The Defense Nuclear Facilities Safety Board has unanimously approved Recommendation 2004–2, for DOE to consider. Recommendation 2004–2 deals with the confinement of hazardous materials at defense nuclear facilities in the Department of Energy complex.

DATES: Comments, data, views, or arguments concerning the recommendation are due on or before January 14, 2005.

ADDRESSES: Send comments, data, views, or arguments concerning this recommendation to: Defense Nuclear

Facilities Safety Board, 625 Indiana Avenue, NW., Suite 700, Washington, DC 20004–2001.

FOR FURTHER INFORMATION CONTACT: Kenneth M. Pusateri or Andrew L. Thibadeau at the address above or telephone (202) 694–7000.

Dated: December 10, 2004.

A.J. Eggenberger,

Vice Chairman.

Recommendation 2004–2 to the Secretary of Energy, Pursuant to 42 U.S.C. 2286a(a)(5), Atomic Energy Act of 1954, As Amended

Dated: December 7, 2004.

There is a long-standing safety practice in the design, construction, and operation of nuclear facilities to build-in and maintain structures, systems, and components that contain or confine radioactive materials. The Department of Energy (DOE) establishes requirements to ensure such containment or confinement. In the hierarchy of safety controls, passive design features are preferred over active systems; however, controls must be capable of performing their intended function. Passive confinement systems are not necessarily capable of containing hazardous materials with confidence because they allow a quantity of unfiltered air contaminated with radioactive material to be released from an operating nuclear facility following certain accident scenarios. Safety related active confinement ventilation systems will continue to function during an accident, thereby ensuring that radioactive material is captured by filters before it can be released into the environment.

The enclosed technical report, DNFSB/TECH–34, *Confinement of Radioactive Materials at Defense Nuclear Facilities,* compares the benefits of including a safety-related active confinement ventilation system to those of relying only on a passive confinement system. This technical report illustrates that using only a passive confinement system for an existing or new defense nuclear processing facility would not account for many safety considerations such as post-accident monitoring and response, and may result in the release of an undeterminable amount of radioactive materials, the consequences of which could approach that of the unmitigated scenarios.

The Defense Nuclear Facilities Safety Board (Board) has advised DOE in various ways during the past decade regarding the need to pay increased attention to the design and operational reliability of the confinement ventilation systems at defense nuclear facilities. These Board efforts include transmittal of a technical report on May 31, 1995, *Overview of Ventilation Systems at Selected DOE Plutonium Processing and Handling Facilities,* a letter to the Deputy Secretary of Energy dated July 8, 1999, and Recommendation 2000–2, *Configuration Management, Vital Safety Systems,* on March 8, 2000. This advice has helped DOE improve the reliability of its confinement ventilation systems. However, DOE requirements have become less prescriptive during the last decade as DOE Order 6430.1A, *General Design Criteria Manual,* was replaced with DOE Order 420.1, *Facility Safety,* and its subsequent revisions. Furthermore, it has become apparent that the Board's advice on confinement systems is not being rigorously pursued as evidenced by the following:

- On December 27, 2002, the Board sent a letter to the National Nuclear Security Administration (NNSA) regarding the confinement concept used for the Highly Enriched Uranium Materials Facility at the Y–12 National Security Complex. The proposed confinement concept was based on isolating the radioactive material in the building using a passive confinement system under certain abnormal events. The Board communicated safety concerns associated with this concept in the letter; subsequently, the confinement concept for HEUMF was modified to adopt a safety-related active ventilation system.
- On April 12, 2004, the Board sent a letter to the Administrator of NNSA regarding similar safety issues related to the confinement systems for the plutonium facility at the Lawrence Livermore National Laboratory. The proposed approach utilized passive confinement of radioactive material from the facility during certain accident scenarios. Further, because the offsite dose consequences of such an unfiltered release were calculated to be below DOE's evaluation guideline (25 rem), the proposal included downgrading the existing safety-class active confinement ventilation system to a safety-significant system. The Board believed that the new approach was inconsistent with a defense-in-depth philosophy. Subsequently, the Livermore Site Office commissioned an independent calculation of the amount of the unfiltered release. These calculations yielded results that were an order of magnitude greater than the original building leakage estimates—clearly indicating that significant uncertainties existed in the analytical techniques. As a result, NNSA decided to maintain the existing safety-class active confinement ventilation system.
- On August 27, 2004, the Board sent a letter to the Under Secretary of Energy regarding the confinement approach proposed for the Salt Waste Processing Facility at the Savannah River Site. The confinement concept for this new facility is based on isolation of the process building using passive confinement during accident scenarios. The Board suggested that the salt waste facility should be designed with a safety-related active ventilation system.

A number of existing facilities (including the TA–55 Plutonium Facility, the Device Assembly Facility, and the Hanford Evaporator) rely on passive or non-safety related confinement systems. More importantly, designs for proposed facilities (including Chemistry and Metallurgy Research Replacement Facility and the Salt Waste Processing Facility) are based on the same passive confinement concept and use an assumed quantitative value for the building leak path factor as a design criterion.

These examples illustrate two primary concerns. First, a reliance on calculations that do not appropriately account for large uncertainties is not defensible. These analytically determined building leak path factors are based on a combination of several computer programs that were not specifically designed for this purpose. Furthermore, it is generally impossible for these programs to model the true conditions of a real accident because of the uncertain behavior of the workers and emergency crews responding to the event.

Second, these examples represent a fundamental change in DOE's approach to protection of the public near defense nuclear facilities. DOE appears to be using the evaluation guideline of 25 rem exposure at the site boundary as a design criterion and an allowable dose to the public. This is contrary to the Board's July 8, 1999 letter to the Deputy Secretary of Energy that states ''the 25 rem evaluation guideline is not to be treated as a design acceptance criterion nor as a justification for nullifying the general design criteria relative to defense-in-depth safety measures.'' It is also contrary to DOE–STD–3009 that states that the 25 rem evaluation guideline ''is not to be treated as a design acceptance criterion.'' However, the Board continues to see 25 rem at the site boundary used as an acceptance criterion for the performance of confinement systems. The Board is concerned that in these examples DOE and its contractors are underestimating the significance of the performance requirements for a confinement ventilation system and are relying on questionable calculations of offsite doses to evaluate performance. The Board reiterates that the 25 rem evaluation guideline is solely to be used for guidance for the classification of safety controls, and not as an acceptable dose to the public for the purpose of designing or operating defense nuclear facilities.

Notwithstanding the concerns discussed above, DOE continues to pursue a passive confinement approach in the design of some new nuclear facilities that have the potential for a radiological release. The Board recognizes that DOE's defense nuclear complex is comprised of a wide variety of nuclear facilities with an equally diverse range of materials, forms, activities, and proximities to the public. For this reason, it is difficult to prescribe a single, broadly-applicable design requirement. However, in light of the examples discussed above, the Board believes a more prescriptive design requirement is needed.

The Board further recognizes that certain Hazard Category 2 and 3 defense nuclear facilities may not benefit significantly from an active confinement ventilation system. An example would be a facility that stores radioactive material in protected, safety-class containers. Other examples may be certain tritium facilities, outside storage locations, burial grounds, or facilities with planned declining nuclear material inventories and scheduled for decommissioning in the near future. This recommendation is not meant to require an active confinement ventilation system in all such cases.

Therefore, the Board recommends that DOE:

1. Disallow reliance on passive confinement systems and require an active confinement ventilation system for all new and existing Hazard Category 2 defense nuclear facilities with the potential for a

radiological release. These systems are expected to be classified as safety-class or safety-significant as required by a conservative application of DOE-approved methodology, and should be designed and maintained to function during abnormal and accident conditions. Exceptions to such classifications should be approved at a level in DOE that ensures a consistent, conservative approach throughout the complex.

2. Disallow reliance on passive confinement systems and require an active confinement ventilation system for all new and existing Hazard Category 3 defense nuclear facilities with the potential for a radiological release. These systems would not ordinarily be classified as safety-class or safety-significant unless such designation is required by the DOE-approved methodology.

3. Revise all applicable DOE directives pertaining to operation of existing facilities, design and construction of new facilities, and major modifications to existing facilities, in accordance with Items 1 and 2 above. These revisions should include guidance for determining when a facility would not benefit from an active confinement ventilation system.

4. Assess existing facilities, ongoing major modifications, and new design/construction projects, to ensure that:

(a) The confinement strategy described above is implemented, and

(b) The 25 rem evaluation guideline is used solely for classification of safety controls.

Section 42 U.S.C. 2286d(e) provides authority to the Secretary of Energy to ''implement any such Recommendation (or part of any such Recommendation) before, on, or after the date on which the Secretary of Energy transmits the implementation plan to the Board under this subsection.'' The Board suggests that the Secretary of Energy consider taking action on Item 4 above in parallel with the development of an Implementation Plan for this Recommendation.

In addition, the Board's Recommendation 2004–1, *Oversight of Complex, High-Hazard Nuclear Operations,* addresses the need for complex-wide consistency in the application of DOE requirements and expectations. The Board expects the mechanisms established in response to Recommendation 2004–1 would likewise ensure consistent, conservative implementation of the confinement requirement provided here.

John T. Conway,

Chairman.

[FR Doc. 04–27426 Filed 12–14–04; 8:45 am]

BILLING CODE 3670–01–P

DEPARTMENT OF ENERGY

[Docket No. EA–274–A]

Application To Export Electric Energy; Wisconsin Public Service Corporation

AGENCY: Office of Fossil Energy, DOE.

ACTION: Notice of application.

SUMMARY: Wisconsin Public Service Corporation (WPSC) has applied to renew its authority to transmit electric energy from the United States to Canada pursuant to section 202(e) of the Federal Power Act.

DATES: Comments, protests or requests to intervene must be submitted on or before January 14, 2005.

ADDRESSES: Comments, protests or requests to intervene should be addressed as follows: Office of Coal & Power Import/Export (FE–27), Office of Fossil Energy, U.S. Department of Energy, 1000 Independence Avenue, SW., Washington, DC 20585–0350 (FAX 202–287–5736).

FOR FURTHER INFORMATION CONTACT: Xavier Puslowski (Program Office) 202–586–4708 or Michael Skinker (Program Attorney) 202–586–2793.

SUPPLEMENTARY INFORMATION: Exports of electricity from the United States to a foreign country are regulated and require authorization under section 202(e) of the Federal Power Act (FPA) (16 U.S.C. 824a(e)).

On February 6, 2003, the Office of Fossil Energy (FE) of the Department of Energy (DOE) issued Order No. EA–274 authorizing WPSC to transmit electric energy from the United States to Canada as a power marketer. That two year authorization will expire on February 6, 2005.

On November 30, 2004, FE received an application from WPSC to renew its authorization to transmit electric energy from the United States to Canada for a five-year term. WPSC proposes to arrange for the delivery of those exports over the international transmission facilities owned by Basin Electric Power Cooperative, Bonneville Power Administration, Eastern Maine Electric Cooperative, International Transmission Company, Joint Owners of the Highgate Project, Long Sault, Inc., Maine Electric Power Company, Maine Public Service Company, Minnesota Power, Inc., Minnkota Power Cooperative, New York Power Authority, Niagara Mohawk Power Corporation, Northern States Power, Vermont Electric Company and Vermont Electric Transmission Company.

The construction of each of the international transmission facilities to be utilized by WPSC, as more fully described in the application, has previously been authorized by a Presidential permit issued pursuant to Executive Order 10485, as amended.

Procedural Matters: Any person desiring to become a party to these proceedings or to be heard by filing comments or protests to this application should file a petition to intervene, comment or protest at the address provided above in accordance with §§ 385.211 or 385.214 of the FERC's Rules of Practice and Procedures (18 CFR 385.211, 385.214). Fifteen copies of each petition and protest should be filed with the DOE on or before the dates listed above.

Comments on the WPSC application to export electric energy to Canada should be clearly marked with Docket EA–274–A. Additional copies are to be filed directly with Dennis M. Derricks, Director, Regulatory Policy & Analysis, Wisconsin Public Service Corporation, 700 North Adams Street, P.O. Box 19001, Green Bay, WI 54307–9001, *and* David Martin Connelly, Esquire, Bruder, Gentile & Marcoux, L.L.P, 1701 Pennsylvania Avenue, NW., Suite 900, Washington, DC 20006–15807.

Copies of this application will be made available, upon request, for public inspection and copying at the address provided above or by accessing the Fossil Energy Home Page at *http://www.fe.doe.gov.* Upon reaching the Fossil Energy Home page, select ''Electricity Regulation,'' and then ''Pending Proceedings'' from the options menus.

Issued in Washington, DC, on December 8, 2004.

Anthony J. Como,

Deputy Director, Electric Power Regulation, Office of Fossil Energy.

[FR Doc. 04–27416 Filed 12–14–04; 8:45 am]

BILLING CODE 6450–01–P

DEPARTMENT OF ENERGY

Federal Energy Regulatory Commission

Notice of Application for Amendment of License and Soliciting Comments, Motions To Intervene, and Protests

December 9, 2004.

Take notice that the following application has been filed with the Commission and is available for public inspection:

a. *Application Type:* Amendment of License to Reflect Terms and Conditions of Settlement Agreement.

b. *Project No:* 2360–144.

c. *Date Filed:* November 12, 2004.

d. *Applicant:* ALLETE, Inc.

e. *Name of Project:* St. Louis Project.

f. *Location:* The project is located on the St. Louis, Beaver, and Cloquet Rivers in Carlton and St. Louis Counties, Minnesota.

g. *Filed Pursuant to:* Federal Power Act, 16 U.S.C. 791(a) 825(r) and sections 799 and 801.

h. *Applicant Contact:* Ingrid K. Johnson, Assistant General Council,

(218) 723–3956 or Brian J. McManus, Jones Day, (202) 879–5452).

i. *FERC Contact:* Any questions on this notice should be addressed to Ms. Rebecca Martin at (202) 502–6012, or e-mail address: *Rebecca.martin@ferc.gov*.

j. *Deadline for filing comments and or motions:* January 10, 2005.

All documents (original and eight copies) should be filed with: Ms. Magalie R. Salas, Secretary, Federal Energy Regulatory Commission, 888 First Street, NE., Washington DC 20426. Please include the project number (P–2360–144) on any comments or motions filed. Comments, protests, and interventions may be filed electronically via the internet in lieu of paper. See, 18 CFR 385.2001(a)(1)(iii) and the instructions on the Commission's Web site at *http://www.ferc.gov* under the ''e-Filing'' link. The Commission strongly encourages e-filings.

k. *Description of Request:* ALLETE is requesting an amendment to its license to reflect the terms and conditions of the Settlement Agreement reached by the licensee with the Fond du Lac Band of Lake Superior Chippewa and the United States Department of the Interior.

l. *Location of the Application:* This filing is available for review at the Commission in the Public Reference Room 888 First Street, NE., Room 2A, Washington, DC 20426 or may be viewed on the Commission's Web site at *http://www.ferc.gov* using the ''e-library'' link. Enter the docket number excluding the last three digits in the docket number field to access the document. For assistance, call toll-free 1–866–208–3676 or e-mail *FERCOnlineSupport@ferc.gov*. For TTY, call (202) 502–8659. A copy is also available for inspection and reproduction at the address in item h. above.

m. Individuals desiring to be included on the Commission's mailing list should so indicate by writing to the Secretary of the Commission.

n. Comments, Protests, or Motions to Intervene—Anyone may submit comments, a protest, or a motion to intervene in accordance with the requirements of Rules of Practice and Procedure, 18 CFR 385.210, .211, .214. In determining the appropriate action to take, the Commission will consider all protests or other comments filed, but only those who file a motion to intervene in accordance with the Commission's Rules may become a party to the proceeding. Any comments, protests, or motions to intervene must be received on or before the specified comment date for the particular application.

o. Filing and Service of Responsive Documents—Any filings must bear in all capital letters the title ''COMMENTS'', ''RECOMMENDATIONS FOR TERMS AND CONDITIONS'', ''PROTEST'', OR ''MOTION TO INTERVENE'', as applicable, and the Project Number of the particular application to which the filing refers. A copy of any motion to intervene must also be served upon each representative of the Applicant specified in the particular application.

p. Agency Comments—Federal, State, and local agencies are invited to file comments on the described applications. Copies of the applications may be obtained by agencies directly from the Applicant. If an agency does not file comments within the time specified for filing comments, it will be presumed to have no comments. One copy of an agency's comments must also be sent to the Applicant's representatives.

Magalie R. Salas,

Secretary.

[FR Doc. E4–3654 Filed 12–14–04; 8:45 am]

BILLING CODE 6717–01–P

DEPARTMENT OF ENERGY

Federal Energy Regulatory Commission

[Docket No. ES05–14–000]

Aquila, Inc.; Notice of Filing

December 9, 2004.

Take notice that on December 3, 2004, Aquila, Inc. submitted an application pursuant to section 204 of the Federal Power Act seeking authorization to issue up to $330 million of long-term, unsecured debt in the form of borrowings under two existing credit facilities.

Any person desiring to intervene or to protest this filing must file in accordance with Rules 211 and 214 of the Commission's Rules of Practice and Procedure (18 CFR 385.211 and 385.214). Protests will be considered by the Commission in determining the appropriate action to be taken, but will not serve to make protestants parties to the proceeding. Any person wishing to become a party must file a notice of intervention or motion to intervene, as appropriate. Such notices, motions, or protests must be filed on or before the comment date. Anyone filing a motion to intervene or protest must serve a copy of that document on the Applicant. On or before the comment date, it is not necessary to serve motions to intervene or protests on persons other than the Applicant.

The Commission encourages electronic submission of protests and interventions in lieu of paper using the ''eFiling'' link at *http://www.ferc.gov.* Persons unable to file electronically should submit an original and 14 copies of the protest or intervention to the Federal Energy Regulatory Commission, 888 First Street, NE., Washington, DC 20426.

This filing is accessible on-line at *http://www.ferc.gov*, using the ''eLibrary'' link and is available for review in the Commission's Public Reference Room in Washington, DC. There is an ''eSubscription'' link on the Web site that enables subscribers to receive e-mail notification when a document is added to a subscribed docket(s). For assistance with any FERC Online service, please e-mail *FERCOnlineSupport@ferc.gov*, or call (866) 208–3676 (toll free). For TTY, call (202) 502–8659.

Comment Date: 5 p.m. eastern time on December 27, 2004.

Magalie R. Salas,

Secretary.

[FR Doc. E4–3664 Filed 12–14–04; 8:45 am]

BILLING CODE 6717–01–P

DEPARTMENT OF ENERGY

Federal Energy Regulatory Commission

Notice of Intent To File Application for a Small Conduit Exemption From Licensing

December 9, 2004.

Take notice that the following notice of intent has been filed with the Commission and is available for public inspection:

a. *Type of Filing:* Notice of intent to file an application for a small conduit exemption from licensing.

b. *Project No:* 1005–000.

c. *Date Filed:* August 30, 2004.

d. *Submitted by:* City of Boulder.

e. *Name of Project:* Boulder Canyon.

f. *Location:* The project is located on Boulder Creek, in Boulder County near the City of Boulder, Colorado. The project occupies about 36 acres of U.S. Forest Service lands within the Roosevelt National Forest.

g. *Filed Pursuant to:* Section 15 of the Federal Power Act, 18 CFR 16.6.

h. *Effective Date of Current License:* April 1, 1962.

i. *Expiration Date of Current License:* August 31, 2009.

j. *Project Description:* The project encompasses Barker Dam and Reservoir,

the Barker Gravity Line, Kossler Dams and Reservoir (forebay), Kossler Pipeline and Boulder Creek Delivery Pipeline (penstock), and Boulder Canyon plant and associated switchgear. The powerhouse contains two impulse wheels connected to two generators with a total plant rating of 20 megawatts.

k. Pursuant to Section 16.19 of the Commission's regulations, the licensee is required to make available the information described in Section 16.7 of the regulations. Such information is available from the Director of Public Works for Utilities for City of Boulder at 1739 Broadway, Boulder, CO, 80306–0471, 303–441–3266.

l. *FERC Contact:* James Hunter, 202–502–6086.

m. The licensee states its unequivocal intent to submit an application for a small conduit exemption from licensing for Project No. 1005. Pursuant to 18 CFR 16.9(b)(1) each application for a new license and any competing license applications must be filed with the Commission at least 24 months prior to the expiration of the existing license. All applications for license for this project must be filed by August 31, 2007.

Existing licensees intending to file exemption applications are subject to the same provisions applicable to applicants for new license regarding notices of intent, access, consultation, application filing deadlines, providing of information, and Commission processing of the applications. *See* 18 CFR 16.12(d) and 16.22(d). No decision on a conduit exemption will be made prior to the opportunity for filing, and consideration of, any competing license application.

n. A copy of this filing is available for review at the Commission in the Public Reference Room or may be viewed on the Commission's Web site at *http://www.ferc.gov* using the ''eLibrary'' link. Enter the docket number to access the document excluding the last three digits in the docket number field to access the document. For assistance, contact FERC Online Support at *FERCOnlineSupport@ferc.gov* or toll-free at 1–866–208–3676, or TTY 202–502–8659. A copy is also available for inspection and reproduction at the address in item h above.

o. Register online at *http://www.ferc.gov/docs-filing/esubscription.asp* to be notified via e-mail of new filings and issuances related to this or other pending projects. For assistance, contact FERC Online Support as shown in the paragraph above.

Magalie R. Salas,

Secretary.

[FR Doc. E4–3652 Filed 12–14–04; 8:45 am]

BILLING CODE 6717–01–P

DEPARTMENT OF ENERGY

Federal Energy Regulatory Commission

[Docket No. RP04–431–001]

Equitrans, L.P.; Notice of Compliance Filing

December 9, 2004.

Take notice that on December 3, 2004, Equitrans, L.P. (Equitrans) tendered for filing as part of its FERC Gas Tariff, Original Volume No. 1, Second Revised Sheet No. 310, with an effective date of October 1, 2004.

Equitrans states that the filing is being made in compliance with the Commission's order issued on August 20, 2004.

Any person desiring to protest this filing must file in accordance with Rule 211 of the Commission's Rules of Practice and Procedure (18 CFR 385.211). Protests to this filing will be considered by the Commission in determining the appropriate action to be taken, but will not serve to make protestants parties to the proceeding. Such protests must be filed in accordance with the provisions of Section 154.210 of the Commission's regulations (18 CFR 154.210). Anyone filing a protest must serve a copy of that document on all the parties to the proceeding.

The Commission encourages electronic submission of protests in lieu of paper using the ''eFiling'' link at *http://www.ferc.gov.* Persons unable to file electronically should submit an original and 14 copies of the protest to the Federal Energy Regulatory Commission, 888 First Street, NE., Washington, DC 20426.

This filing is accessible on-line at *http://www.ferc.gov*, using the ''eLibrary'' link and is available for review in the Commission's Public Reference Room in Washington, DC. There is an ''eSubscription'' link on the Web site that enables subscribers to receive e-mail notification when a document is added to a subscribed docket(s). For assistance with any FERC Online service, please e-mail *FERCOnlineSupport@ferc.gov*, or call (866) 208–3676 (toll free). For TTY, call (202) 502–8659.

Magalie R. Salas,

Secretary.

[FR Doc. E4–3660 Filed 12–14–04; 8:45 am]

BILLING CODE 6717–01–P

DEPARTMENT OF ENERGY

Federal Energy Regulatory Commission

[Docket No. RP99–518–066]

Gas Transmission Northwest Corporation; Notice of Negotiated Rate

December 9, 2004.

Take notice that on November 30, 2004, Gas Transmission Northwest Corporation (GTN) tendered for filing as part of its FERC Gas Tariff, Third Revised Volume No. 1–A, Fifteenth Revised Sheet No. 15, to become effective December 1, 2004.

GTN states that this sheet is being filed to reflect the continuation of a negotiated rate agreement pursuant to evergreen provisions contained in the agreement.

GTN further states that a copy of this filing has been served on GTN's jurisdictional customers and interested State regulatory agencies.

Any person desiring to intervene or to protest this filing must file in accordance with Rules 211 and 214 of the Commission's Rules of Practice and Procedure (18 CFR 385.211 and 385.214). Protests will be considered by the Commission in determining the appropriate action to be taken, but will not serve to make protestants parties to the proceeding. Any person wishing to become a party must file a notice of intervention or motion to intervene, as appropriate. Such notices, motions, or protests must be filed in accordance with the provisions of Section 154.210 of the Commission's regulations (18 CFR 154.210). Anyone filing an intervention or protest must serve a copy of that document on the Applicant. Anyone filing an intervention or protest on or before the intervention or protest date need not serve motions to intervene or protests on persons other than the Applicant.

The Commission encourages electronic submission of protests and interventions in lieu of paper using the ''eFiling'' link at *http://www.ferc.gov.* Persons unable to file electronically should submit an original and 14 copies of the protest or intervention to the Federal Energy Regulatory Commission, 888 First Street, NE., Washington, DC 20426.

This filing is accessible on-line at *http://www.ferc.gov,* using the ''eLibrary'' link and is available for review in the Commission's Public Reference Room in Washington, DC. There is an ''eSubscription'' link on the Web site that enables subscribers to receive e-mail notification when a document is added to a subscribed docket(s). For assistance with any FERC Online service, please e-mail *FERCOnlineSupport@ferc.gov,* or call (866) 208–3676 (toll free). For TTY, call (202) 502–8659.

Magalie R. Salas,

Secretary.

[FR Doc. E4–3651 Filed 12–14–04; 8:45 am]

BILLING CODE 6717–01–P

DEPARTMENT OF ENERGY

Federal Energy Regulatory Commission

[Docket No. RP02–362–008]

Gas Transmission Northwest Corporation; Notice of Compliance Filing

December 9, 2004.

Take notice that, on November 30, 2004, Gas Transmission Northwest Corporation (GTN) tendered for filing a compliance filing pursuant to the Commission's November 3, 2004 Order on Remand in Docket No. RP02–362–006.

GTN states that copies of the filing were served on parties on the official service list in the above-captioned proceeding.

Any person desiring to protest this filing must file in accordance with Rule 211 of the Commission's Rules of Practice and Procedure (18 CFR 385.211). Protests to this filing will be considered by the Commission in determining the appropriate action to be taken, but will not serve to make protestants parties to the proceeding. Such protests must be filed in accordance with the provisions of Section 154.210 of the Commission's regulations (18 CFR 154.210). Anyone filing a protest must serve a copy of that document on all the parties to the proceeding.

The Commission encourages electronic submission of protests in lieu of paper using the ''eFiling'' link at *http://www.ferc.gov.* Persons unable to file electronically should submit an original and 14 copies of the protest to the Federal Energy Regulatory Commission, 888 First Street, NE., Washington, DC 20426.

This filing is accessible on-line at *http://www.ferc.gov,* using the ''eLibrary'' link and is available for review in the Commission's Public Reference Room in Washington, DC. There is an ''eSubscription'' link on the Web site that enables subscribers to receive e-mail notification when a document is added to a subscribed docket(s). For assistance with any FERC Online service, please e-mail *FERCOnlineSupport@ferc.gov,* or call (866) 208–3676 (toll free). For TTY, call (202) 502–8659.

Magalie R. Salas,

Secretary.

[FR Doc. E4–3657 Filed 12–14–04; 8:45 am]

BILLING CODE 6717–01–P

DEPARTMENT OF ENERGY

Federal Energy Regulatory Commission

[Docket No. RP02–361–043]

Gulfstream Natural Gas System, L.L.C.; Notice of Negotiated Rate

December 9, 2004.

Take notice that on November 30, 2004, Gulfstream Natural Gas System, L.L.C. (Gulfstream) tendered for filing as part of its FERC Gas Tariff, Original Volume No. 1, Original Sheet No. 8.01k, reflecting an effective date of December 1, 2004.

Gulfstream states that this filing is being made in connection with a negotiated rate transaction pursuant to Section 31 of the General Terms and Conditions of Gulfstream's FERC Gas Tariff. Gulfstream states that Original Sheet No. 8.01k identifies and describes the negotiated rate transaction, including the exact legal name of the relevant shipper, the negotiated rate, the rate schedule, the contract terms, and the contract quantity. Gulfstream also states that Original Sheet No. 8.01k includes footnotes where necessary to provide further details on the transaction listed thereon.

Gulfstream states that copies of its filing have been mailed to all affected customers and interested State commissions.

Any person desiring to intervene or to protest this filing must file in accordance with Rules 211 and 214 of the Commission's Rules of Practice and Procedure (18 CFR 385.211 and 385.214). Protests will be considered by the Commission in determining the appropriate action to be taken, but will not serve to make protestants parties to the proceeding. Any person wishing to become a party must file a notice of intervention or motion to intervene, as appropriate. Such notices, motions, or protests must be filed in accordance with the provisions of Section 154.210 of the Commission's regulations (18 CFR 154.210). Anyone filing an intervention or protest must serve a copy of that document on the Applicant. Anyone filing an intervention or protest on or before the intervention or protest date need not serve motions to intervene or protests on persons other than the Applicant.

The Commission encourages electronic submission of protests and interventions in lieu of paper using the ''eFiling'' link at *http://www.ferc.gov.* Persons unable to file electronically should submit an original and 14 copies of the protest or intervention to the Federal Energy Regulatory Commission, 888 First Street, NE., Washington, DC 20426.

This filing is accessible on-line at *http://www.ferc.gov*, using the ''eLibrary'' link and is available for review in the Commission's Public Reference Room in Washington, DC. There is an ''eSubscription'' link on the Web site that enables subscribers to receive e-mail notification when a document is added to a subscribed docket(s). For assistance with any FERC Online service, please e-mail *FERCOnlineSupport@ferc.gov*, or call (866) 208–3676 (toll free). For TTY, call (202) 502–8659.

Magalie R. Salas,

Secretary.

[FR Doc. E4–3656 Filed 12–14–04; 8:45 am]

BILLING CODE 6717–01–P

DEPARTMENT OF ENERGY

Federal Energy Regulatory Commission

[Project No. 4914]

International Paper Company; Notice of Authorization for Continued Project Operation

December 8, 2004.

On November 20, 2002, International Paper Company, licensee for the De Pere Project No. 4914, filed an application for a new or subsequent license pursuant to the Federal Power Act (FPA) and the Commission's regulations. Project No. 4914 is located on the Fox River in Brown County, Wisconsin.

The license for Project No. 4914 was issued for a period ending November 30, 2004. Section 15(a)(1) of the FPA, 16 U.S.C. 808(a)(1), requires the Commission, at the expiration of a license term, to issue from year to year

an annual license to the then licensee under the terms and conditions of the prior license until a new license is issued, or the project is otherwise disposed of as provided in section 15 or any other applicable section of the FPA. If the project's prior license waived the applicability of section 15 of the FPA, then, based on section 9(b) of the Administrative Procedure Act, 5 U.S.C. 558(c), and as set forth at 18 CFR 16.21(a), if the licensee of such project has filed an application for a subsequent license, the licensee may continue to operate the project in accordance with the terms and conditions of the license after the minor or minor part license expires, until the Commission acts on its application. If the licensee of such a project has not filed an application for a subsequent license, then it may be required, pursuant to 18 CFR 16.21(b), to continue project operations until the Commission issues someone else a license for the project or otherwise orders disposition of the project.

If the project is subject to section 15 of the FPA, notice is hereby given that an annual license for Project No. 4914 is issued to International Paper Company for a period effective December 1, 2004 through November 30, 2005, or until the issuance of a new license for the project or other disposition under the FPA, whichever comes first. If issuance of a new license (or other disposition) does not take place on or before December 1, 2005, notice is hereby given that, pursuant to 18 CFR 16.18(c), an annual license under Section 15(a)(1) of the FPA is renewed automatically without further order or notice by the Commission, unless the Commission orders otherwise.

If the project is not subject to section 15 of the FPA, notice is hereby given that International Paper Company is authorized to continue operation of the De Pere Project No. 4914 until such time as the Commission acts on its application for subsequent license.

Magalie R. Salas,

Secretary.

[FR Doc. E4–3671 Filed 12–14–04; 8:45 am]

BILLING CODE 6717–01–P

DEPARTMENT OF ENERGY

Federal Energy Regulatory Commission

[Docket No. RP04–360–002]

Maritimes & Northeast Pipeline, L.L.C.; Notice of Motion To Place Suspended Rates Into Effect

December 9, 2004.

Take notice that on December 1, 2004, Maritimes & Northeast Pipeline, L.L.C. (Maritimes) tendered for filing as part of its FERC Gas Tariff, First Revised Volume No. 1, the revised tariff sheets as listed on Appendix A to the filing, to become effective January 1, 2005.

Maritimes states that the purpose of this filing is to move the Docket No. RP04–360 suspended rates into effect on January 1, 2005, in accordance with the Commission's regulations at 18 CFR 154.206(a).

Maritimes states that copies of its filing have been served upon all affected customers of Maritimes, interested State commissions and all parties on the Commission's Official Service List in this proceeding.

Any person desiring to protest this filing must file in accordance with Rule 211 of the Commission's Rules of Practice and Procedure (18 CFR 385.211). Protests to this filing will be considered by the Commission in determining the appropriate action to be taken, but will not serve to make protestants parties to the proceeding. Such protests must be filed in accordance with the provisions of Section 154.210 of the Commission's regulations (18 CFR 154.210). Anyone filing a protest must serve a copy of that document on all the parties to the proceeding.

The Commission encourages electronic submission of protests in lieu of paper using the ''eFiling'' link at *http://www.ferc.gov.* Persons unable to file electronically should submit an original and 14 copies of the protest to the Federal Energy Regulatory Commission, 888 First Street, NE., Washington, DC 20426.

This filing is accessible on-line at *http://www.ferc.gov*, using the ''eLibrary'' link and is available for review in the Commission's Public Reference Room in Washington, DC. There is an ''e-Subscription'' link on the Web site that enables subscribers to receive e-mail notification when a document is added to a subscribed docket(s). For assistance with any FERC Online service, please e-mail *FERCOnlineSupport@ferc.gov*, or call (866) 208–3676 (toll free). For TTY, call (202) 502–8659.

Magalie R. Salas,

Secretary.

[FR Doc. E4–3659 Filed 12–14–04; 8:45 am]

BILLING CODE 6717–01–P

DEPARTMENT OF ENERGY

Federal Energy Regulatory Commission

[Docket No. CP05–34–000]

Natural Gas Pipeline Company of America; Notice of Application

December 8, 2004.

Take notice that on December 6, 2004, Natural Gas Pipeline Company of America (Natural), 747 East 22nd Street, Lombard, Illinois 60148, filed in the above referenced docket an application pursuant to sections 7(b) and 7(c) of the Natural Gas Act (NGA) and Subpart A of Part 157 of the Federal Energy Regulatory Commission's (Commission) Regulations for authorization: (i) To construct and operate a new 1,775 horsepower (hp) compressor unit and a new 3,550 hp compressor unit at Natural's Compressor Station No. 155 at Chico in Wise County, Texas (Station 155); (ii) to construct and operate a new 5,551 hp compressor unit at Natural's Compressor Station No. 801 at Ratliff City in Carter County, Oklahoma (Station 801); and (iii) to abandon three 660 hp compressor units and a 2,000 hp compressor unit at Station 155, all as more fully set forth in the application which is on file with the Commission and open to public inspection. The filing may also be viewed on the Web at *http://www.ferc.gov* using the ''eLibrary'' link. Enter the docket number excluding the last three digits in the docket number field to access the document. For assistance, please contact FERC Online Support at *FERCOnlineSupport@ferc.gov* or toll free at (866) 208–3676, or TTY, contact (202) 502–8659.

Natural states that the proposed project will provide 20,000 Dth/d of additional transportation capacity in its Segment No. 1, which starts in Wise County, Texas, with gas flowing north through Station 155 to the end point at Station 801 in Carter County, Oklahoma and 51,000 Dth/d of additional transportation capacity in its A/G Line, which runs east and south from Carter County, Oklahoma to Cass County, Texas, at a cost of approximately $20.7 million.

Any questions concerning the application should be directed to Bruce

H. Newsome, Vice President, Natural Gas Pipeline Company of America, 747 East 22nd Street, Lombard, Illinois 60148–5072, or call (630) 691–3526.

There are two ways to become involved in the Commission's review of this project. First, any person wishing to obtain legal status by becoming a party to the proceedings for this project should, on or before the comment date, file with the Federal Energy Regulatory Commission, 888 First Street, NE., Washington, DC 20426, a motion to intervene in accordance with the requirements of the Commission's Rules of Practice and Procedure (18 CFR 385.214 or 385.211) and the Regulations under the NGA (18 CFR 157.10). A person obtaining party status will be placed on the service list maintained by the Secretary of the Commission and will receive copies of all documents filed by the applicant and by all other parties. A party must submit 14 copies of filings made with the Commission and must mail a copy to the applicant and to every other party in the proceeding. Only parties to the proceeding can ask for court review of Commission orders in the proceeding.

Persons who wish to comment only on the environmental review of this project, or in support of or in opposition to this project, should submit an original and two copies of their comments to the Secretary of the Commission. Environmental commenters will be placed on the Commission's environmental mailing list, will receive copies of the environmental documents, and will be notified of meetings associated with the Commission's environmental review process. Environmental commenters will not be required to serve copies of filed documents on all other parties. The Commission's rules require that persons filing comments in opposition to the project provide copies of their protests only to the applicant. However, the non-party commenters will not receive copies of all documents filed by other parties or issued by the Commission (except for the mailing of environmental documents issued by the Commission) and will not have the right to seek court review of the Commission's final order.

The Commission strongly encourages electronic filings of comments, protests, and interventions via the internet in lieu of paper. *See* 18 CFR 385.2001(a)(1)(iii) and the instructions on the Commission's Web site (*http://www.ferc.gov*) under the ''e-Filing'' link.

Comment Date: December 29, 2004.

Magalie R. Salas,

Secretary.

[FR Doc. E4–3670 Filed 12–14–04; 8:45 am]

BILLING CODE 6717–01–P

DEPARTMENT OF ENERGY

Federal Energy Regulatory Commission

[Docket No. CP05–32–000]

Northwest Pipeline Corporation; Notice of Application for Certificate of Public Convenience and Necessity and Approval for Abandonment

December 8, 2004.

Take notice that on November 29, 2004, Northwest Pipeline Corporation (Northwest), 295 Chipeta Way, Salt Lake City, Utah 84158 filed with the Federal Energy Regulatory Commission an application under section 7 of the Natural Gas Act (NGA) and Part 157 of the Commission's regulations for its ''Capacity Replacement Project'', located in western Washington, requesting the Commission to grant: (i) Permission and approval to abandon approximately 268 miles of 26-inch pipeline and related facilities between Sumas and Washougal, Washington (Sumas-Washougal corridor); and (ii) a certificate of public convenience and necessity authorizing Northwest to construct and operate approximately 79.5 miles of 36-inch pipeline to partially loop Northwest's 30-inch pipeline in the Sumas-Washougal corridor, 10,760 (ISO) net horsepower of additional compression at the existing Chehalis and Washougal compressor stations, and related facilities, to replace most of the approximately 360 MDth/d of Sumas-Washougal corridor capacity attributable to the 26-inch pipeline. In addition, Northwest seeks authority to abandon a portion of the capacity along the corridor that Northwest states is not needed at this time.

Northwest states that it developed its Capacity Replacement Project in response to an amended Corrective Action Order (CAO) issued by the Office of Pipeline Safety (OPS), which requires Northwest to permanently abandon its 26-inch pipeline in the Sumas-Washougal corridor, and install replacement facilities as necessary to meet future capacity requirements. Northwest states that the estimated total cost of the proposed Capacity Replacement Project is approximately $333.1 million.

The application is on file with the Commission and open to public inspection. The filing is available for review at the Commission in the Public Reference Room or may be viewed on the Commission's Web site at *http://www.ferc.gov* using the ''eLibrary'' link. Enter the docket number excluding the last three digits in the docket number field to access the document. For assistance, please contact FERC Online Support at *FERCOnlineSupport@ferc.gov* or toll free at (866) 208–3676, or for TTY, contact (202) 502–8659. Any questions regarding these applications should be directed to Gary K. Kotter, Manager, Certificates and Tariffs—3F3, Northwest Pipeline Corporation, P.O. Box 58900, Salt Lake City, Utah 84158–0900. Telephone: (801) 584–7117, Fax: (801) 584–7764.

On May 12, 2004 the Commission staff granted Northwest's request to utilize the National Environmental Policy Act (NEPA) Pre-Filing Process and assigned Docket No. PF04–10–000 to staff activities involving Northwest. Now, as of the filing of Northwest's applications on November 29, 2004, the NEPA Pre-Filing Process for those projects has ended. From this time forward, Northwest's proceeding will be conducted in Docket Nos. CP05–32–000, as noted in the caption of this Notice.

There are two ways to become involved in the Commission's review of this project. First, any person wishing to obtain legal status by becoming a party to the proceedings for this project should, on or before the comment date listed below, file with the Federal Energy Regulatory Commission, 888 First Street, NE., Washington, DC 20426, a motion to intervene in accordance with the requirements of the Commission's Rules of Practice and Procedure (18 CFR 385.214 or 385.211) and the Regulations under the NGA (18 CFR 157.10). A person obtaining party status will be placed on the service list maintained by the Secretary of the Commission and will receive copies of all documents filed by the applicant and by all other parties. A party must submit 14 copies of this filing and all subsequent filings made with the Commission and must mail a copy of all filings to the applicant and to every other party in the proceeding. Only parties to the proceeding can ask for court review of Commission orders in the proceeding.

However, other persons do not have to intervene in order to have comments considered. The second way to participate is by filing with the Secretary of the Commission, as soon as possible, an original and two copies of comments in support of or in opposition to this project. The Commission will

consider these comments in determining the appropriate action to be taken, but the filing of a comment alone will not serve to make the filer a party to the proceeding. The Commission's rules require that persons filing comments in opposition to this project provide copies of their protests only to the party or parties directly involved in the protest.

Persons may also wish to comment further only on the environmental review of this project. Environmental commenters will be placed on the Commission's environmental mailing list, will receive copies of environmental documents issued by the Commission, and will be notified of meetings associated with the Commission's environmental review process. Those persons, organizations, and agencies who submitted comments during the NEPA Pre-Filing Process in Docket No. PF04–10–000 are already on the Commission staff's environmental mailing list for the proceeding in the above dockets and may file additional comments on or before the below listed comment date. Environmental commenters will not be required to serve copies of filed documents on all other parties. However, environmental commenters are also not parties to the proceeding and will not receive copies of all documents filed by other parties or non-environmental documents issued by the Commission. Further, they will not have the right to seek court review of any final order by Commission in this proceeding.

The Commission strongly encourages electronic filings of comments, protests, and interventions via the Internet in lieu of paper. See 18 CFR 385.2001(a)(1)(iii) and the instructions on the Commission's Web site (*http://www.ferc.gov*) under the ''e-Filing'' link.

Comment Date: December 29, 2004.

Magalie R. Salas,

Secretary.

[FR Doc. E4–3672 Filed 12–14–04; 8:45 am]

BILLING CODE 6717–01–P

DEPARTMENT OF ENERGY

Federal Energy Regulatory Commission

[Docket No. RP99–513–035]

Questar Pipeline Company; Notice of Negotiated Rates

December 9, 2004.

Take notice that on December 1, 2004, Questar Pipeline Company (Questar) tendered for filing as part of its FERC Gas Tariff, First Revised Volume No. 1, Thirty-sixth Revised Sheet No. 7, and Seventh Revised Sheet No. 7A, with an effective date of February 1, 2005.

Questar states that it submitted its negotiated-rate filing in accordance with the Commission's Policy Statement in Docket Nos. RM95–6–000 and RM96–7–000 issued January 31, 1996.

Questar states that a copy of this filing has been served upon all parties to this proceeding, Questar's customers, the Public Service Commission of Utah and the Public Service Commission of Wyoming.

Any person desiring to intervene or to protest this filing must file in accordance with Rules 211 and 214 of the Commission's Rules of Practice and Procedure (18 CFR 385.211 and 385.214). Protests will be considered by the Commission in determining the appropriate action to be taken, but will not serve to make protestants parties to the proceeding. Any person wishing to become a party must file a notice of intervention or motion to intervene, as appropriate. Such notices, motions, or protests must be filed in accordance with the provisions of Section 154.210 of the Commission's regulations (18 CFR 154.210). Anyone filing an intervention or protest must serve a copy of that document on the Applicant. Anyone filing an intervention or protest on or before the intervention or protest date need not serve motions to intervene or protests on persons other than the Applicant.

The Commission encourages electronic submission of protests and interventions in lieu of paper using the ''eFiling'' link at *http://www.ferc.gov*. Persons unable to file electronically should submit an original and 14 copies of the protest or intervention to the Federal Energy Regulatory Commission, 888 First Street, NE., Washington, DC 20426.

This filing is accessible on-line at *http://www.ferc.gov*, using the ''eLibrary'' link and is available for review in the Commission's Public Reference Room in Washington, DC. There is an ''eSubscription'' link on the Web site that enables subscribers to receive e-mail notification when a document is added to a subscribed docket(s). For assistance with any FERC Online service, please e-mail *FERCOnlineSupport@ferc.gov*, or call (866) 208–3676 (toll free). For TTY, call (202) 502–8659.

Magalie R. Salas,

Secretary.

[FR Doc. E4–3663 Filed 12–14–04; 8:45 am]

BILLING CODE 6717–01–P

DEPARTMENT OF ENERGY

Federal Energy Regulatory Commission

[Docket No. RP04–276–002]

Southern Star Central Gas Pipeline, Inc.; Notice of Compliance Filing

December 9, 2004.

Take notice that on November 30, 2004, Southern Star Central Gas Pipeline, Inc. (Southern Star) tendered for filing actual test period data, ending October 31, 2004, as an update Southern Star's current rate case, Docket No. RP04–276.

Southern states that this filing is being made in compliance with 18 CFR Section 154.311 in accordance with the corrected procedural schedule issued on August 10, 2004 by the Administrative Law Judge.

Southern Star states that it will provide copies of these updates to those parties specifically requesting them.

Any person desiring to protest this filing must file in accordance with Rule 211 of the Commission's Rules of Practice and Procedure (18 CFR 385.211). Protests to this filing will be considered by the Commission in determining the appropriate action to be taken, but will not serve to make protestants parties to the proceeding. Such protests must be filed in accordance with the provisions of Section 154.210 of the Commission's regulations (18 CFR 154.210). Anyone filing a protest must serve a copy of that document on all the parties to the proceeding.

The Commission encourages electronic submission of protests in lieu of paper using the ''eFiling'' link at *http://www.ferc.gov.* Persons unable to file electronically should submit an original and 14 copies of the protest to the Federal Energy Regulatory Commission, 888 First Street, NE., Washington, DC 20426.

This filing is accessible on-line at *http://www.ferc.gov,* using the ''eLibrary'' link and is available for review in the Commission's Public Reference Room in Washington, DC. There is an ''e-Subscription'' link on the Web site that enables subscribers to receive e-mail notification when a document is added to a subscribed docket(s). For assistance with any FERC Online service, please e-mail *FERCOnlineSupport@ferc.gov,* or call

(866) 208–3676 (toll free). For TTY, call (202) 502–8659.

Magalie R. Salas,

Secretary.

[FR Doc. E4–3658 Filed 12–14–04; 8:45 am]

BILLING CODE 6717–01–P

DEPARTMENT OF ENERGY

Federal Energy Regulatory Commission

Errata Notice

December 3, 2004.

Symbiotics, LLC: Project No. 11978–002
Symbiotics, LLC: Project No. 12037–001
Prosser Creek Hydro, LLC: Project No. 12191–001
McCloud Hydro, LLC: Project No. 12195–001
Gillham Hydro, LLC: Project No. 12226–001
Nimrod Hydro, LLC: Project No. 12237–001
San Jacinto Hydro, LLC: Project No. 12242–001
Spavinaw Hydro, LLC: Project No. 12243–001
Great Salt Plains, LLC: Project No. 12263–001
Wappapello Hydro, LLC: Project No. 12268–001
GV Montgomery Hydro, LLC: Project No. 12277–001
KR 6 Hydro, LLC: Project No. 12278–001
Wilkins Hydro, LLC: Project No. 12281–001
Huntington Hydro, LLC: Project No. 12294–001
Rough River Hydro, LLC: Project No. 12364–002
Coralville Hydro, LLC: Project No. 12417–001

On December 1, 2004, the Commission issued a ''Notice of Surrender of Preliminary Permits'' on December 1, 2004, in the above-referenced docket numbers. This Errata Notice corrects the project number for Gillham Hydro, to read: Project No. 12226–001.

This correction is reflected in the caption above.

Magalie R. Salas,

Secretary.

[FR Doc. E4–3666 Filed 12–14–04; 8:45 am]

BILLING CODE 6717–01–P

DEPARTMENT OF ENERGY

Federal Energy Regulatory Commission

[Docket No. RP99–480–013]

Texas Eastern Transmission, LP; Notice of Compliance Filing

December 9, 2004.

Take notice that on December 3, 2004, Texas Eastern Transmission, LP (Texas Eastern) submitted a compliance filing pursuant to a Commission order issued on November 3, 2004, in Docket Nos. RP99–480–010 and RP99–480–011. *Texas Eastern Transmission*, LP, 109 FERC ¶ 61,145 (2004).

Texas Eastern states that copies of the filing were served upon all affected customers of Texas Eastern and interested State commissions, as well as upon all parties on the Commission's official service list in this proceeding.

Any person desiring to protest this filing must file in accordance with Rule 211 of the Commission's Rules of Practice and Procedure (18 CFR 385.211). Protests to this filing will be considered by the Commission in determining the appropriate action to be taken, but will not serve to make protestants parties to the proceeding. Such protests must be filed in accordance with the provisions of Section 154.210 of the Commission's regulations (18 CFR 154.210). Anyone filing a protest must serve a copy of that document on all the parties to the proceeding.

The Commission encourages electronic submission of protests in lieu of paper using the ''eFiling'' link at *http://www.ferc.gov*. Persons unable to file electronically should submit an original and 14 copies of the protest to the Federal Energy Regulatory Commission, 888 First Street, NE., Washington, DC 20426.

This filing is accessible on-line at *http://www.ferc.gov*, using the ''eLibrary'' link and is available for review in the Commission's Public Reference Room in Washington, DC. There is an ''eSubscription'' link on the Web site that enables subscribers to receive e-mail notification when a document is added to a subscribed docket(s). For assistance with any FERC Online service, please e-mail *FERCOnlineSupport@ferc.gov*, or call (866) 208–3676 (toll free). For TTY, call (202) 502–8659.

Magalie R. Salas,

Secretary.

[FR Doc. E4–3662 Filed 12–14–04; 8:45 am]

BILLING CODE 6717–01–P

DEPARTMENT OF ENERGY

Federal Energy Regulatory Commission

[Docket No. RP05–117–000]

Transcontinental Gas Pipe Line Corporation; Notice of Proposed Changes in FERC Gas Tariff

December 9, 2004.

Take notice that on December 6, 2004, Transcontinental Gas Pipe Line Corporation (Transco) tendered for filing as part of its FERC Gas Tariff, Third Revised Volume No. 1, Twenty-eighth Revised Sheet No. 28, to become effective December 1, 2004. The proposed changes would reflect a decrease in the Rate Schedule S–2 Injection Charge from $0.0388 to $0.0375 and Withdrawal Charge from $0.0591 to $0.0541.

Transco states that copies of the filing are being mailed to affected customers and interested State Commissions.

Any person desiring to intervene or to protest this filing must file in accordance with Rules 211 and 214 of the Commission's Rules of Practice and Procedure (18 CFR 385.211 and 385.214). Protests will be considered by the Commission in determining the appropriate action to be taken, but will not serve to make protestants parties to the proceeding. Any person wishing to become a party must file a notice of intervention or motion to intervene, as appropriate. Such notices, motions, or protests must be filed in accordance with the provisions of Section 154.210 of the Commission's regulations (18 CFR 154.210). Anyone filing an intervention or protest must serve a copy of that document on the Applicant. Anyone filing an intervention or protest on or before the intervention or protest date need not serve motions to intervene or protests on persons other than the Applicant.

The Commission encourages electronic submission of protests and interventions in lieu of paper using the ''eFiling'' link at *http://www.ferc.gov*. Persons unable to file electronically should submit an original and 14 copies of the protest or intervention to the Federal Energy Regulatory Commission, 888 First Street, NE., Washington, DC 20426.

This filing is accessible on-line at *http://www.ferc.gov*, using the ''eLibrary'' link and is available for review in the Commission's Public Reference Room in Washington, DC. There is an ''eSubscription'' link on the Web site that enables subscribers to receive e-mail notification when a document is added to a subscribed docket(s). For assistance with any FERC Online service, please e-mail *FERCOnlineSupport@ferc.gov*, or call (866) 208–3676 (toll free). For TTY, call (202) 502–8659.

Magalie R. Salas,

Secretary.

[FR Doc. E4–3661 Filed 12–14–04; 8:45 am]

BILLING CODE 6717–01–P

DEPARTMENT OF ENERGY

Federal Energy Regulatory Commission

Notice of Settlement Agreement, Applications and Applicant-Prepared EAS Accepted for Filing, Soliciting Motions To Intervene and Protests, and Soliciting Comments, and Final Recommendations, Terms and Conditions, and Prescriptions

December 9, 2004.

Take notice that the following hydroelectric applications and applicant-prepared environmental assessments and settlement agreement have been filed with the Commission and are available for public inspection.

a. *Type of Applications:* New major license and settlement agreement.

b. *Project Nos.:* 2071–013; 2111–018; 2213–011; and 935–053.

c. *Dates Filed:* May 5, 1999 (2071–013); April 28, 2004 (other projects); and December 2 and 3, 2004 (settlement agreement).

d. *Applicants:* PacifiCorp (Project Nos. 2071, 2111, & 935) and Public Utility District No. 1 of Cowlitz County (Project No. 2213).

e. *Name of Projects:* Yale Hydroelectric Project (2071); Swift No. 1 Hydroelectric Project (2111); Swift No. 2 Hydroelectric Project (2213); and Merwin Hydroelectric Project (935).

f. *Location:* On the North Fork Lewis River, in Cowlitz, Clark, and Skamania County Washington. The Yale and Merwin Projects occupy 84 and 142.15 acres, respectively, of Federal land administered by the Bureau of Land Management. The Swift No. 1 Project occupies 63.25 acres of Federal land administered by the Bureau of Land Management and 229.00 acres of Federal lands administered by the U.S. Forest Service. The Swift No. 2 Project occupies 3.79 acres of Federal land owned by the U.S. Forest Service.

g. *Filed Pursuant to:* Federal Power Act 16 U.S.C. 791 (a)–825(r) and Rule 602 of the Commission's Rules of Practice and Procedure, 18 CFR 385.602.

h. *Applicant Contacts:* Yale, Swift No. 1, and Merwin Projects: Frank C. Shrier, Lead Project Manager, Hydro Licensing, PacifiCorp 825 NE. Multnomah Street, Suite 1500, Portland, Oregon 97232; Telephone (503) 813–6622. Swift No. 2 Project: Diana MacDonald, Public Utility District No. 1 of Cowlitz County P.O. Box 3007, 961 12th Avenue Longview, Washington 98632; Telephone (360) 577–7585; e-mail—*dmacdonald@cowlitzpud.org.*

i. *FERC Contact:* Jon Cofrancesco at (202) 502–8951; or e-mail at *jon.cofrancesco@ferc.gov.*

j. Deadline for filing comments on the settlement and motions to intervene, protests, comments, and final recommendations, terms and conditions, and prescriptions on the relicensing proceeding is 60 days from the issuance of this notice; reply comments are due 105 days from the issuance date of this notice.

All documents (original and eight copies) should be filed with: Magalie R. Salas, Secretary, Federal Energy Regulatory Commission, 888 First Street, NE., Washington, DC 20426.

The Commission's Rules of Practice require all intervenors filing documents with the Commission to serve a copy of that document on each person on the official service list for the project. Further, if an intervener files comments or documents with the Commission relating to the merits of an issue that may affect the responsibilities of a particular resource agency, they must also serve a copy of the document on that resource agency.

Motions to intervene and protests, comments, recommendations, terms and conditions, and prescriptions may be filed electronically via the Internet in lieu of paper. The Commission strongly encourages electronic filings. See 18 CFR 385.2001(a)(1)(iii) and the instructions on the Commission's Web site (*http://www.ferc.gov*) under the ''e-Filing'' link.

k. These applications have been accepted for filing.

l. *The Project Descriptions:*

The Yale Project consists of: (1) A 1,500-foot-long embankment dam known as Yale Dam, and an adjacent 1, 600-foot-long, earth-fill structure known as Saddle Dam; (2) a 10.5-mile-long reservoir with a surface area of 3,800 acres; (3) a concrete, chute-type spillway; (4) a 1,530-foot-long diversion tunnel; (5) two penstocks; (6) a powerhouse located downstream of Yale Dam, containing two generating units with a combined capacity of 134 megawatts (MW); (7) a 11.5-mile-long, 115-kilovolt transmission line; and (8) appurtenant facilities.

The Swift No. 1 Project consists of: (1) A 2,100-foot-long earth fill dam; (2) a reservoir with a surface area of 4,680 acres at the normal maximum operating elevation (1,000 feet mean sea level); (3) a 3,000-foot-long diversion tunnel; (4) an intake structure; (5) three individual penstocks; (6) a surge tank; (7) a powerhouse, containing three 80–MW, generating units, having a total installed capacity of 240 MW; (8) a 1,800-foot-long, gated spillway and discharge channel; and (9) appurtenant facilities.

The Swift No. 2 Project consists of: (1) A 3.2-mile-long power canal consisting of both concrete and earth embankment sections and having a surface area of 53 acres; (2) a 1,100-foot-long concrete lined forebay; (3) an 82-foot-long check structure; (4) a 537 foot-long side channel spillway/wasteway, (5) a 90 foot-high intake structure with two vertical gates: (6) two 250-foot-long steel lined penstocks; (7) a powerhouse, containing two 35-MW generating units, having a total installed capacity of 70 MW; (8) a 0.9-mile-long, 230-kilovolt transmission line; and (9) appurtenant facilities.

The Merwin Project consists of: (1) A 728-foot-long concrete radius arch dam; (2) a reservoir with a surface area of 4,040 acres at the normal maximum operating level (239.6 feet mean sea level); (3) a 1,462-foot-long diversion tunnel; (4) an intake structure; (5) three 150-foot-long penstocks; (6) a powerhouse, containing three 45–MW and one 1–MW generating units, having a total installed capacity of 136 MW; (8) a gated spillway; and (9) appurtenant facilities.

m. PacifiCorp and Public Utility District No. 1 of Cowlitz County each filed identical settlement agreements on December 2 and 3, 2004, respectively, on behalf of themselves, and twenty parties to resolve, among the signatories, issues related to the pending applications for new major licenses for the Yale, Swift No. 1, Swift No. 2, and Merwin Hydroelectric Projects. The settlement includes measures for fish passage, instream flow, fish hatcheries, aquatic habitat, wildlife habitat, recreation, cultural resources, flood management, socioeconomics, monitoring and evaluation, and coordination among the parties. The parties request the Commission accept the relevant provisions of the settlement agreement in its license orders without material modification.

n. Copies of the applications and settlement are available for review at the Commission in the Public Reference Room or may be viewed on the Commission's Web site at *http://www.ferc.gov* using the ''eLibrary'' link. Enter the docket number excluding the last three digits in the docket number field to access the document. For assistance, contact FERC Online Support at *FERCOnlineSupport@ferc.gov* or toll-free at 1–866–208–3676, or for TTY, (202) 502–8659. Copies are also available for inspection and reproduction at the addresses in item h above.

o. Anyone may submit comments, a protest, or a motion to intervene in accordance with the requirements of Rules of Practice and Procedure, 18 CFR

385.210, .211, .214. In determining the appropriate action to take, the Commission will consider all protests or other comments filed, but only those who file a motion to intervene in accordance with the Commission's Rules may become a party to the proceeding. Any comments, protests, or motions to intervene must be received on or before the specified comment date for the particular application.

All filings must (1) bear in all capital letters the title ''PROTEST'', ''MOTION TO INTERVENE'', ''COMMENTS,'' ''REPLY COMMENTS,'' ''RECOMMENDATIONS,'' ''TERMS AND CONDITIONS,'' or ''PRESCRIPTIONS;'' (2) set forth in the heading the name of the applicant and the project number of the application to which the filing responds; (3) furnish the name, address, and telephone number of the person protesting or intervening; and (4) otherwise comply with the requirements of 18 CFR 385.2001 through 385.2005. All comments, recommendations, terms and conditions or prescriptions must set forth their evidentiary basis and otherwise comply with the requirements of 18 CFR 4.34(b). Agencies may obtain copies of the application directly from the applicant. A copy of any protest or motion to intervene must be served upon each representative of the applicant specified in the particular application. A copy of all other filings in reference to this application must be accompanied by proof of service on all persons listed in the service list prepared by the Commission in this proceeding, in accordance with 18 CFR 4.34(b) and 385.2010.

You may also register online at *http://www.ferc.gov/docs-filing/esubscription.asp* to be notified via e-mail of new filings and issuances related to this or other pending projects. For assistance, contact FERC Online Support.

Magalie R. Salas,

Secretary.

[FR Doc. E4–3653 Filed 12–14–04; 8:45 am]

BILLING CODE 6717–01–P

DEPARTMENT OF ENERGY

Federal Energy Regulatory Commission

[Project No. 7321–018]

Erie Boulevard Hydropower, L.P.; Notice of Application Tendered for Filing With the Commission, Soliciting Additional Study Requests, and Establishing Procedural Schedule for Relicensing and a Deadline for Submission of Final Amendments

December 3, 2004.

Take notice that the following hydroelectric application has been filed with the Commission and is available for public inspection.

a. *Type of Application:* Subsequent License.

b. *Project No.:* 7321–018.

c. *Date Filed:* November 26, 2004.

d. *Applicant:* Erie Boulevard Hydropower, L.P.

e. *Name of Project:* Macomb Project.

f. *Location:* On the Salmon River in Franklin County, near Malone, New York. The project does not occupy Federal lands.

g. *Filed Pursuant to:* Federal Power Act 16 U.S.C. 791 (a)–825(r).

h. *Applicant Contact:* Jerry L. Sabattis, Erie Boulevard Hydropower, L.P., 225 Greenfield Parkway, Suite 201, Liverpool, NY 13088, (315) 413–2787.

i. *FERC Contact:* John Smith, (202) 502–8972 or *john.smith@ferc.gov.*

j. *Cooperating Agencies:* We are asking Federal, State, local, and tribal agencies with jurisdiction and/or special expertise with respect to environmental issues to cooperate with us in the preparation of the environmental document. Agencies who would like to request cooperating status should follow the instructions for filing comments described in item l below.

k. Pursuant to (4.32(b)(7) of 18 CFR of the Commission's regulations, if any resource agency, Indian Tribe, or person believes that an additional scientific study should be conducted in order to form an adequate factual basis for a complete analysis of the application on its merit, the resource agency, Indian Tribe, or person must file a request for a study with the Commission not later than 60 days from the date of filing of the application, and serve a copy of the request on the applicant.

l. Deadline for filing additional study requests and requests for cooperating agency status: January 24, 2005.

All documents (original and eight copies) should be filed with: Magalie R. Salas, Secretary, Federal Energy Regulatory Commission, 888 First Street, NE., Washington, DC 20426.

The Commission's Rules of Practice require all intervenors filing documents with the Commission to serve a copy of that document on each person on the official service list for the project. Further, if an intervenor files comments or documents with the Commission relating to the merits of an issue that may affect the responsibilities of a particular resource agency, they must also serve a copy of the document on that resource agency.

Additional study requests and requests for cooperating agency status may be filed electronically via the Internet in lieu of paper. The Commission strongly encourages electronic filings. See 18 CFR 385.2001(a)(1)(iii) and the instructions on the Commission's Web site (*http://www.ferc.gov*) under the ''eFiling'' link.

m. This application is not ready for environmental analysis at this time.

n. The existing Macomb Project consists of: (1) A 106-foot-long, 32-foot-high concrete gravity overflow-type dam having a spillway crest elevation of 570.7 feet above mean sea level; (2) a 38-foot-long, 25-foot-high intake structure along each bank; (3) a 6-foot-diameter, 60-foot-long, riveted-steel, gated waste tube along each bank; (4) a 14-acre reservoir with a net storage capacity of 14 acre-feet at the spillway crest elevation; (5) a 6.5-foot-diameter, 60-foot-long, riveted-steel, concrete-encased, gated pipeline along the left (south) bank; (6) a powerhouse containing one 1,000-kilowatt horizontal Francis turbine; (7) a 370-foot-long, 34.5-kilovolt transmission line; and (8) appurtenant facilities. The applicant estimates that the total average annual generation would be 5,660 megawatthours.

o. A copy of the application is available for review at the Commission in the Public Reference Room or may be viewed on the Commission's Web site at *http://www.ferc.gov* using the ''eLibrary'' link. Enter the docket number excluding the last three digits in the docket number field to access the document. For assistance, contact FERC Online Support at *FERCOnlineSupport@ferc.gov* or toll-free at 1–866–208–3676, or for TTY, (202) 502–8659. A copy is also available for inspection and reproduction at the address in item h above.

You may also register online at *http://www.ferc.gov/docs-filing/esubscription.asp* to be notified via e-mail of new filings and issuances related to this or other pending projects. For assistance, contact FERC Online Support.

p. With this notice, we are initiating consultation with the New York State

Historic Preservation Officer (SHPO), as required by Section 106, National Historic Preservation Act, and the regulations of the Advisory Council on Historic Preservation, 36 CFR 800.4.

q. Procedural schedule and final amendments: The application will be processed according to the following Hydro Licensing Schedule. Revisions to the schedule will be made as appropriate.

Issue Acceptance or Deficiency Letter—January 2005
Issue Scoping Document—February 2005
Notice of application is ready for environmental analysis—May 2005
Notice of the availability of the EA—November 2005
Ready for Commission's decision on the application—December 2005

Final amendments to the application must be filed with the Commission no later than 30 days from the issuance date of the notice of ready for environmental analysis.

Magalie R. Salas,

Secretary.

[FR Doc. E4–3665 Filed 12–14–04; 8:45 am]

BILLING CODE 6717–01–P

DEPARTMENT OF ENERGY

Federal Energy Regulatory Commission

Notice of Settlement Agreement and Soliciting Comments

December 3, 2004.

Take notice that the following hydroelectric application has been filed with the Commission and is available for public inspection.

a. *Type of Application:* Settlement Agreement on New License Application.

b. *Project No.:* 2150–033.

c. *Date Filed:* November 30, 2004.

d. *Applicant:* Puget Sound Energy.

e. *Name of Project:* Baker River Project.

f. *Location:* On the Baker River, near the Town of Concrete, in Whatcom and Skagit Counties, Washington. The project occupies about 5,207 acres of lands within the Mt. Baker-Snoqualmie National Forest managed by the U.S. Forest Service.

g. *Filed Pursuant to:* Rule 602 of the Commission's Rules of Practice and Procedure, 18 CFR 385.602.

h. *Applicant Contact:* Connie Freeland, Puget Sound Energy, P.O. Box 97034 PSE–09S Bellevue, WA 98009–9734; (425) 462–3556 or *connie.freeland@pse.com.*

i. *FERC Contact:* Steve Hocking, Federal Energy Regulatory Commission, 888 First Street, NE., Washington, DC 20426; (202) 502–8753 or *steve.hocking@ferc.gov.*

j. *Deadline for filing comments:* December 23, 2004. Reply comments: January 3, 2005.

All documents (original and eight copies) must be filed with: Magalie R. Salas, Secretary, Federal Energy Regulatory Commission, 888 First Street, NE., Washington, DC 20426. Please put the project name ''Baker River Project'' and project number ''P–2150–033'' on the first page of all documents.

The Commission's Rules of Practice require all intervenors filing documents with the Commission to serve a copy of that document on each person on the official service list for the project. Further, if an intervenor files comments or documents with the Commission relating to the merits of an issue that may affect the responsibilities of a particular resource agency, they must also serve a copy of the document on that resource agency.

Comments may be filed electronically via the Internet in lieu of paper. The Commission strongly encourages electronic filings. See 18 CFR 385.2001(a)(1)(iii) and the instructions on the Commission's Web site *http://www.ferc.gov* under the ''e-Filing'' link.

k. The Baker River Project has two developments. The Upper Baker development consists of the following existing facilities: (1) A 312-foot-high by 1,200-foot-long concrete gravity dam impounding Baker Lake with a surface area of about 4,980 acres at a normal full pool elevation of 727.77 feet mean sea level (msl); (2) a 122-foot-long, 59-foot wide concrete and steel powerhouse at the base of the dam containing two turbine-generator units, Unit No. 1 with an authorized capacity of 52,400 kilowatts (kW) and Unit No. 2 with an authorized capacity of 38,300 kW; (3) a 115-foot-high by 1,200-foot-long earth and rock-fill dam, known as West Pass dike, located in a depression about 1,500 feet north of Upper Baker dam; (4) a 22-foot-high by 3,000-foot-long earth-filled dike, known as Pumping Pond dike, which impounds Depression Lake with a surface area of 44 acres at a normal full pool elevation of 699 feet msl; (5) a water recovery pumping station adjacent to Pumping Pond; (6) fish passage facilities and fish spawning facilities; and (7) appurtenant facilities.

The Lower Baker development consists of the following existing facilities: (1) A 285-foot-high by 550-foot-long concrete thick arch dam impounding Lake Shannon with a surface area of about 2,278 acres at a normal full pool elevation of 442.35 feet msl; (2) a concrete intake equipped with trashracks and gatehouse located at the dam's left abutment; (3) a 1,410-foot-long concrete and steel-lined pressure tunnel; (4) a concrete surge tank near the downstream end of the pressure tunnel; (5) a 90-foot-long, 66-foot-wide concrete and steel powerhouse containing one turbine-generator unit, Unit No. 3 with an authorized capacity of 79,330 kW; (6) a 750-foot-long, 115-kilovolt transmission line; (7) fish passage facilities including a 150-foot-long by 12-foot-high barrier dam; and (8) appurtenant facilities.

l. A copy of the settlement agreement is available for review in the Commission's Public Reference Room or may be viewed on the Commission's Web site *http://www.ferc.gov* using the ''eLibrary'' link. Enter the docket number excluding the last three digits in the docket number field to access the document. For assistance, contact FERC Online Support at *FERCOnlineSupport@ferc.gov* or toll-free at 1 (866) 208–3676, or for TTY, (202) 502–8659. A copy is also available for inspection and reproduction at the address in item ''h'' above.

You may also register online at *http://www.ferc.gov/docs-filing/esubscription.asp* to be notified via e-mail of new filings and issuances related to this or other pending projects. For assistance, contact FERC Online Support.

Magalie R. Salas,

Secretary.

[FR Doc. E4–3667 Filed 12–14–04; 8:45 am]

BILLING CODE 6717–01–P

DEPARTMENT OF ENERGY

Federal Energy Regulatory Commission

[Docket Nos. ER03–1102–003, ER03–1102–004, EL05–14–000]

California Independent System Operator Corporation; Notice of Technical Conference

December 3, 2004.

Take notice that a technical conference will be held on Wednesday, January 12, 2005, and Thursday, January 13, 2005, beginning at 9 a.m. (e.s.t.), in Room 3M–2B at the offices of the Federal Energy Regulatory Commission, 888 First Street, NE., Washington, DC 20426. Pursuant to the Commission's October 28, 2004, Order,[1] the technical conference will afford the parties an opportunity to discuss the California Independent System Operator

[1] *California Indep. Sys. Operator Corp.,* 109 FERC ¶ 61,087 at P 52 (2004).

Corporation's (CAISO) proposed ''self-certification'' process and any party's alternate proposal on how best to achieve the CAISO's objective based upon the presentation of proposals at the technical conference. All proposals must be submitted within 30 days of the date of this notice. Parties must be prepared to discuss their proposals at the technical conference.

All interested persons and staff are permitted to attend.

Magalie R. Salas,

Secretary.

[FR Doc. E4–3668 Filed 12–14–04; 8:45 am]

BILLING CODE 6717–01–P

DEPARTMENT OF ENERGY

Federal Energy Regulatory Commission

[Docket No. RM98–1–000]

Records Governing Off-the Record Communications; Public Notice

December 8, 2004.

This constitutes notice, in accordance with 18 CFR 385.2201(b), of the receipt of exempt and prohibited off-the-record communications.

Order No. 607 (64 FR 51222, September 22, 1999) requires Commission decisional employees, who make or receive an exempt or prohibited off-the-record communication relevant to the merits of a contested on-the-record proceeding, to deliver a copy of the communication, if written, or a summary of the substance of any oral communication, to the Secretary.

Prohibited communications will be included in a public, non-decisional file associated with, but not a part of, the decisional record of the proceeding. Unless the Commission determines that the prohibited communication and any responses thereto should become a part of the decisional record, the prohibited off-the-record communication will not be considered by the Commission in reaching its decision. Parties to a proceeding may seek the opportunity to respond to any facts or contentions made in a prohibited off-the-record communication, and may request that the Commission place the prohibited communication and responses thereto in the decisional record. The Commission will grant such a request only when it determines that fairness so requires. Any person identified below as having made a prohibited off-the-record communication shall serve the document on all parties listed on the official service list for the applicable proceeding in accordance with Rule 2010, 18 CFR 385.2010.

Exempt off-the-record communications will be included in the decisional record of the proceeding, unless the communication was with a cooperating agency as described by 40 CFR 1501.6, made under 18 CFR 385.2201(e)(1)(v).

The following is a list of exempt communications recently received in the Office of the Secretary. The communications listed are grouped by docket numbers. These filings are available for review at the Commission in the Public Reference Room or may be viewed on the Commission's Web site at *http://www.ferc.gov* using the eLibrary (FERRIS) link. Enter the docket number excluding the last three digits in the docket number field to access the document. For Assistance, please contact FERC, Online Support at *FERCOnlineSupport@ferc.gov* or toll free at (866) 208–3676, or for TTY, contact (202) 502–8659.

Exempt:

Docket number	Date filed	Presenter or requester
1. CP04–36–000	11–19–04	Honorable Edward M. Kennedy.
CP04–41–000		Honorable John F. Kerry.
2. CP04–413–000	11–29–04	Marti Morgan.
CP04–414–000		
CP04–415–000		

Magalie R. Salas,

Secretary.

[FR Doc. E4–3669 Filed 12–14–04; 8:45 am]

BILLING CODE 6717–01–P

DEPARTMENT OF ENERGY

Federal Energy Regulatory Commission

[Docket No. RM04–7–000]

Market-Based Rates for Public Utilities; Notice Inviting Comments

December 9, 2004.

On December 7, 2004, the Commission Staff held a technical conference to discuss issues associated with the above-captioned rulemaking proceeding on market-based rates. All interested persons are invited to file written comments no later than January 10, 2005 in relation to the issues that were the subject of the technical conference.

Filing Requirements for Paper and Electronic Filings

Comments, papers, or other documents related to this proceeding may be filed in paper format or electronically. The Commission strongly encourages electronic filings. Those filing electronically do not need to make a paper filing.

Documents filed electronically via the Internet must be prepared in MS Word, Portable Document Format, or ASCII format. To file the document, access the Commission's Web site at *http://www.ferc.gov*, click on ''e-Filing'' and then follow the instructions for each screen. First time users will have to establish a user name and password. The Commission will send an automatic acknowledgement to the sender's e-mail address upon receipt of comments. User assistance for electronic filing is available at 202–502–8258 or by e-mail to *efiling@ferc.gov*. Do not submit comments to this e-mail address.

For paper filings, the original and 14 copies of the comments should be submitted to the Office of the Secretary, Federal Energy Regulatory Commission, 888 First Street, NE., Washington, DC 20426 and should refer to the above-referenced docket number.

All written comments will be placed in the Commission's public files and will be available for inspection at the Commission's Public Reference Room, 888 First Street, NE., Washington, DC 20426, during regular business hours.

Magalie R. Salas,

Secretary.

[FR Doc. E4–3655 Filed 12–14–04; 8:45 am]

BILLING CODE 6717–01–P

ENVIRONMENTAL PROTECTION AGENCY

[OPP–2004–0340; FRL–7689–8]

Disulfoton (Di-Syston 15G); Notice of Receipt of Request to Voluntarily Terminate Certain Uses

AGENCY: Environmental Protection Agency (EPA).

ACTION: Notice.

SUMMARY: In accordance with section 6(f)(1) of the Federal Insecticide, Fungicide, and Rodenticide Act (FIFRA), as amended, EPA is issuing a notice of receipt of a request by the registrant to voluntarily terminate the following uses of the 15% granular formulation of disulfoton (DiSyston 15G): Beans, Brussels sprouts, cabbage, cauliflower, cotton, peanuts, peppers, radish grown for seed, and clover grown for seed. The registrant will retain use of Di-Syston 15G on Fraser fir Christmas trees in North Carolina and coffee trees in Puerto Rico, provided that it is used with a new closed system applicator. DiSyston 15G is not the last disulfoton product registered for agricultural use in the United States. The registrant will retain the registration of DiSyston 8E, the liquid emulsifiable concentrate, which must also be used with closed systems. However, EPA intends to grant this request to terminate these uses at the close of the comment period for this announcement unless the Agency receives substantive comments within the comment period that would merit its further review of this request, or unless the registrant withdraws their request within this period. Upon acceptance of this request, any sale, distribution, or use of products listed in this notice will be permitted only if such sale, distribution, or use is consistent with the terms as described in the final order.

DATES: Comments, identified by docket ID number OPP–2004–0340, must be received on or before June 13, 2005.

ADDRESSES: Comments may be submitted electronically, by mail, or through hand delivery/courier. Follow the detailed instructions as provided in Unit I. of the **SUPPLEMENTARY INFORMATION**.

FOR FURTHER INFORMATION CONTACT: Christina Scheltema, Special Review and Reregistration Division (7508C), Office of Pesticide Programs, Environmental Protection Agency, 1200 Pennsylvania Ave., NW., Washington, DC 20460–0001; telephone number: (703) 308–2201; fax number: (703) 308–8005; e-mail address:*scheltema.christina@epa.gov*.

SUPPLEMENTARY INFORMATION:

I. General Information

A. Does this Action Apply to Me?

This action is directed to the public in general, and may be of interest to a wide range of stakeholders including environmental, human health, and agricultural advocates; the chemical industry; pesticide users; and members of the public interested in the sale, distribution, or use of pesticides. Since others also may be interested, the Agency has not attempted to describe all the specific entities that may be affected by this action. If you have any questions regarding the applicability of this action to a particular entity, consult the person listed under **FOR FURTHER INFORMATION CONTACT**.

B. How Can I Get Copies of this Document and Other Related Information?

1. Docket. EPA has established an official public docket for this action under docket identification (ID) number OPP–2004–0340. The official public docket consists of the documents specifically referenced in this action, any public comments received, and other information related to this action. Although a part of the official docket, the public docket does not include Confidential Business Information (CBI) or other information whose disclosure is restricted by statute. The official public docket is the collection of materials that is available for public viewing at the Public Information and Records Integrity Branch (PIRIB), Rm. 119, Crystal Mall #2, 1801 S. Bell St., Arlington, VA. This docket facility is open from 8:30 a.m. to 4 p.m., Monday through Friday, excluding legal holidays. The docket telephone number is (703) 305–5805.

2. *Electronic access.* You may access this **Federal Register** document electronically through the EPA Internet under the ''**Federal Register**'' listings at *http://www.epa.gov/fedrgstr/*.

An electronic version of the public docket is available through EPA's electronic public docket and comment system, EPA Dockets. You may use EPA Dockets at *http://www.epa.gov/edocket/* to submit or view public comments, access the index listing of the contents of the official public docket, and to access those documents in the public docket that are available electronically. Once in the system, select ''search,'' then key in the appropriate docket ID number.

Certain types of information will not be placed in the EPA Dockets. Information claimed as CBI and other information whose disclosure is restricted by statute, which is not included in the official public docket, will not be available for public viewing in EPA's electronic public docket. EPA's policy is that copyrighted material will not be placed in EPA's electronic public docket but will be available only in printed, paper form in the official public docket. To the extent feasible, publicly available docket materials will be made available in EPA's electronic public docket. When a document is selected from the index list in EPA Dockets, the system will identify whether the document is available for viewing in EPA's electronic public docket. Although not all docket materials may be available electronically, you may still access any of the publicly available docket materials through the docket facility identified in Unit I.B.1. EPA intends to work towards providing electronic access to all of the publicly available docket materials through EPA's electronic public docket.

For public commenters, it is important to note that EPA's policy is that public comments, whether submitted electronically or in paper, will be made available for public viewing in EPA's electronic public docket as EPA receives them and without change, unless the comment contains copyrighted material, CBI, or other information whose disclosure is restricted by statute. When EPA identifies a comment containing copyrighted material, EPA will provide a reference to that material in the version of the comment that is placed in EPA's electronic public docket. The entire printed comment, including the copyrighted material, will be available in the public docket.

Public comments submitted on computer disks that are mailed or delivered to the docket will be transferred to EPA's electronic public docket. Public comments that are mailed or delivered to the docket will be scanned and placed in EPA's electronic public docket. Where practical, physical objects will be photographed, and the photograph will be placed in EPA's electronic public docket along with a brief description written by the docket staff.

C. How and to Whom Do I Submit Comments?

You may submit comments electronically, by mail, or through hand delivery/courier. To ensure proper receipt by EPA, identify the appropriate docket ID number in the subject line on the first page of your comment. Please ensure that your comments are submitted within the specified comment period. Comments received after the close of the comment period will be

marked ''late.'' EPA is not required to consider these late comments. If you wish to submit CBI or information that is otherwise protected by statute, please follow the instructions in Unit I.D. Do not use EPA Dockets or e-mail to submit CBI or information protected by statute.

1. *Electronically.* If you submit an electronic comment as prescribed in this unit, EPA recommends that you include your name, mailing address, and an e-mail address or other contact information in the body of your comment. Also include this contact information on the outside of any disk or CD ROM you submit, and in any cover letter accompanying the disk or CD ROM. This ensures that you can be identified as the submitter of the comment and allows EPA to contact you in case EPA cannot read your comment due to technical difficulties or needs further information on the substance of your comment. EPA's policy is that EPA will not edit your comment, and any identifying or contact information provided in the body of a comment will be included as part of the comment that is placed in the official public docket, and made available in EPA's electronic public docket. If EPA cannot read your comment due to technical difficulties and cannot contact you for clarification, EPA may not be able to consider your comment.

i. *EPA Dockets.* Your use of EPA's electronic public docket to submit comments to EPA electronically is EPA's preferred method for receiving comments. Go directly to EPA Dockets at *http://www.epa.gov/edocket/*, and follow the online instructions for submitting comments. Once in the system, select ''search,'' and then key in docket ID number OPP–2004–0340. The system is an ''anonymous access'' system, which means EPA will not know your identity, e-mail address, or other contact information unless you provide it in the body of your comment.

ii. *E-mail.* Comments may be sent by e-mail to *opp-docket@epa.gov*, Attention: Docket ID Number OPP–2004–0340. In contrast to EPA's electronic public docket, EPA's e-mail system is not an ''anonymous access'' system. If you send an e-mail comment directly to the docket without going through EPA's electronic public docket, EPA's e-mail system automatically captures your e-mail address. E-mail addresses that are automatically captured by EPA's e-mail system are included as part of the comment that is placed in the official public docket, and made available in EPA's electronic public docket.

iii. *Disk or CD ROM.* You may submit comments on a disk or CD ROM that you mail to the mailing address identified in Unit I.C.2. These electronic submissions will be accepted in WordPerfect or ASCII file format. Avoid the use of special characters and any form of encryption.

2. *By mail.* Send your comments to: Public Information and Records Integrity Branch (PIRIB) (7502C), Office of Pesticide Programs (OPP), Environmental Protection Agency, 1200 Pennsylvania Ave., NW., Washington, DC 20460–0001, Attention: Docket ID Number OPP–2004–0340.

3. *By hand delivery or courier.* Deliver your comments to: Public Information and Records Integrity Branch (PIRIB), Office of Pesticide Programs (OPP), Environmental Protection Agency, Rm. 119, Crystal Mall #2, 1801 S. Bell St., Arlington, VA, Attention: Docket ID Number OPP–2004–0340. Such deliveries are only accepted during the docket's normal hours of operation as identified in Unit I.B.1.

D. How Should I Submit CBI to the Agency?

Do not submit information that you consider to be CBI electronically through EPA's electronic public docket or by e-mail. You may claim information that you submit to EPA as CBI by marking any part or all of that information as CBI (if you submit CBI on disk or CD ROM, mark the outside of the disk or CD ROM as CBI and then identify electronically within the disk or CD ROM the specific information that is CBI). Information so marked will not be disclosed except in accordance with procedures set forth in 40 CFR part 2.

In addition to one complete version of the comment that includes any information claimed as CBI, a copy of the comment that does not contain the information claimed as CBI must be submitted for inclusion in the public docket and EPA's electronic public docket. If you submit the copy that does not contain CBI on disk or CD ROM, mark the outside of the disk or CD ROM clearly that it does not contain CBI. Information not marked as CBI will be included in the public docket and EPA's electronic public docket without prior notice. If you have any questions about CBI or the procedures for claiming CBI, please consult the person listed under **FOR FURTHER INFORMATION CONTACT**.

E. What Should I Consider as I Prepare My Comments for EPA?

You may find the following suggestions helpful for preparing your comments:

1. Explain your views as clearly as possible.

2. Describe any assumptions that you used.

3. Provide any technical information and/or data you used that support your views.

4. If you estimate potential burden or costs, explain how you arrived at your estimate.

5. Provide specific examples to illustrate your concerns.

6. Offer alternatives.

7. Make sure to submit your comments by the comment period deadline identified.

8. To ensure proper receipt by EPA, identify the appropriate docket ID number in the subject line on the first page of your response. It would also be helpful if you provided the name, date, and **Federal Register** citation related to your comments.

II. Background on the Receipt of Request to Terminate Uses

This notice announces receipt by EPA of a request from Bayer CropSciences to amend the product registration for DiSyston 15G to terminate most agricultural uses. In a letter dated September 30, 2004, Bayer CropSciences requested that EPA cancel all agricultural uses of DiSyston 15G except for use on Fraser firs in North Carolina and coffee trees in Puerto Rico where this product will be applied using a closed-system hand applicator. In an earlier letter dated May 20, 2004, Bayer CropSciences indicated that they would voluntarily cancel these uses rather than develop the necessary exposure monitoring data specified in the Interim Reregistration Eligibility Decision (IRED).

DiSyston 15G (EPA Reg. Nos. 3125–172 and 264–723), the 15% granular formulation of disulfoton, is currently registered for use on beans, Brussels sprouts, cabbage, cauliflower, coffee trees, cotton, peanuts, peppers, radish grown for seed, clover grown for seed, and Christmas trees. These uses were determined to be eligible for reregistration in the Agency's 2002 IRED for disulfoton provided that certain conditions were met, including implementation of closed systems and development of confirmatory exposure monitoring data. Because disulfoton is an organophosphate (OP), the final reregistration eligiblity decision is pending consideration of the OP cumulative risk assessment.

III. What Action is the Agency Taking?

This notice announces receipt by EPA of a request from a registrant to terminate uses of disulfoton product registrations. The affected products and

the registrants making the request are identified in Tables 1 and 2 of this unit.

Under section 6(f)(1)(A) of FIFRA, registrants may request, at any time, that their pesticide registrations be canceled or amended to terminate one or more pesticide uses. Section 6(f)(1)(B) of FIFRA requires that before acting on a request for voluntary cancellation, EPA must provide a 30–day public comment period on the request for voluntary cancellation or use termination. In addition, section 6(f)(1)(C) of FIFRA requires that EPA provide a 180–day comment period on a request for voluntary cancellation or termination of any minor agricultural use before granting the request, unless:

1. The registrants request a waiver of the comment period, or

2. The Administrator determines that continued use of the pesticide would pose an unreasonable adverse effect on the environment.

Unless a request is withdrawn by the registrant within 180 days of publication of this notice, or if the Agency determines that there are substantive comments that warrant further review of this request, an order will be issued amending the affected registrations.

TABLE 1.—DISULFOTON PRODUCT REGISTRATIONS WITH PENDING REQUESTS FOR AMENDMENT

EPA Registration No.	Product Name	Company
3125–172	DiSyston 15G	Bayer CropSciences
264–723	DiSyston 15G	Bayer CropSciences

Table 2 of this unit includes the name and address of record for the registrant of the products listed in Table 1 of this unit.

TABLE 2.—REGISTRANT REQUESTING VOLUNTARY CANCELLATION AND/OR AMENDMENTS

EPA Company No.	Company Name and Address
264 (formerly 3125)	Bayer CropSciences, 2 T.W. Alexander Drive, Research Triangle Park, NC 277709

IV. What is the Agency's Authority for Taking this Action?

Section 6(f)(1) of FIFRA provides that a registrant of a pesticide product may at any time request that any of its pesticide registrations be canceled or amended to terminate one or more uses. FIFRA further provides that, before acting on the request, EPA must publish a notice of receipt of any such request in the **Federal Register**. Thereafter, following the public comment period, the Administrator may approve such a request.

V. Procedures for Withdrawal of Request and Considerations for Reregistration of Disulfoton

Registrants who choose to withdraw a request for cancellation must submit such withdrawal in writing to the person listed under **FOR FURTHER INFORMATION CONTACT**, postmarked before June 13, 2005. This written withdrawal of the request for cancellation will apply only to the applicable FIFRA section 6(f)(1) request listed in this notice. If the products(s) have been subject to a previous cancellation action, the effective date of cancellation and all other provisions of any earlier cancellation action are controlling.

VI. Provisions for Disposition of Existing Stocks

Existing stocks are those stocks of registered pesticide products which are currently in the United States and which were packaged, labeled, and released for shipment prior to the effective date of the cancellation action. If the request for use termination is granted, the Agency intends to issue a cancellation order that will allow persons other than the registrant to continue to sell and/or use existing stocks of cancelled products until such stocks are exhausted, provided that such use is consistent with the terms of the previously approved labeling on, or that accompanied, the cancelled product. The order will specifically prohibit any use of existing stocks that is not consistent with such previously approved labeling. If, as the Agency currently intends, the final cancellation order contains the existing stocks provision just described, the order will be sent only to the affected registrants of the cancelled products. If the Agency determines that the final cancellation order should contain existing stocks provisions different than the ones just described, the Agency will publish the cancellation order in the **Federal Register**.

List of Subjects

Environmental protection, Pesticides and pests.

Dated: December 6, 2004.

Debra Edwards,

Director, Special Review and Reregistration Division, Office of Pesticide Programs.

[FR Doc. 04–27366 Filed 12–14–04; 8:45 am]

BILLING CODE 6560–50–S

ENVIRONMENTAL PROTECTION AGENCY

[OPP–2004–0389; FRL–7687–7]

Pesticide Product; Registration Applications

AGENCY: Environmental Protection Agency (EPA).

ACTION: Notice.

SUMMARY: This notice announces receipt of applications to register pesticide products containing new active ingredients not included in any previously registered products pursuant to the provisions of section 3(c)(4) of the Federal Insecticide, Fungicide, and Rodenticide Act (FIFRA), as amended.

DATES: Written comments, identified by the docket identification (ID) number OPP–2004–0389, must be received on or before January 14, 2005.

ADDRESSES: Comments may be submitted electronically, by mail, or through hand delivery/courier. Follow the detailed instructions as provided in Unit I. of the **SUPPLEMENTARY INFORMATION**.

FOR FURTHER INFORMATION CONTACT: The Regulatory Action Leader, Biopesticides and Pollution Prevention Division (7511C), listed in the table in this unit:

Regulatory Action Leader	Telephone number/e-mail address	Mailing address	File symbol
Todd Peterson	(703) 308–7224; *peterson.todd @epa.gov*	Biopesticides and Pollution Prevention Division (7511C), Office of Pesticides Programs, Environmental Protection Agency, 1200 Pennsylvania Ave., NW., Washington, DC 20460–0001	80917–R 80917–U 81853–R
Carol Frazer	(703) 308–8810; *frazer.carol @epa.gov*	Do.	81325–E

SUPPLEMENTARY INFORMATION:

I. General Information

A. Does this Action Apply to Me?

You may be potentially affected by this action if you manufacture pesticides or apply pesticides to growing crops. Potentially affected entities may include, but are not limited to:

- Crop production
- Animal production
- Food manufacturing
- Pesticide manufacturing

This listing is not intended to be exhaustive, but rather provides a guide for readers regarding entities likely to be affected by this action. Other types of entities not listed in this unit could also be affected. The North American Industrial Classification System (NAICS) codes have been provided to assist you and others in determining whether this action might apply to certain entities. If you have any questions regarding the applicability of this action to a particular entity, consult the person listed under **FOR FURTHER INFORMATION CONTACT**.

B. How Can I Get Copies of this Document and Other Related Information?

1. *Docket*. EPA has established an official public docket for this action under docket identification (ID) number OPP–2004–0389. The official public docket consists of the documents specifically referenced in this action, any public comments received, and other information related to this action. Although a part of the official docket, the public docket does not include Confidential Business Information (CBI) or other information whose disclosure is restricted by statute. The official public docket is the collection of materials that is available for public viewing at the Public Information and Records Integrity Branch (PIRIB), Rm. 119, Crystal Mall #2, 1801 S. Bell St., Arlington, VA. This docket facility is open from 8:30 a.m. to 4 p.m., Monday through Friday, excluding legal holidays. The docket telephone number is (703) 305–5805.

2. *Electronic access*. You may access this **Federal Register** document electronically through the EPA Internet under the ''**Federal Register**'' listings at *http://www.epa.gov/fedrgstr/*.

An electronic version of the public docket is available through EPA's electronic public docket and comment system, EPA Dockets. You may use EPA Dockets at *http://www.epa.gov/edocket/* to submit or view public comments, access the index listing of the contents of the official public docket, and to access those documents in the public docket that are available electronically. Once in the system, select ''search,'' then key in the appropriate docket ID number.

Certain types of information will not be placed in the EPA Dockets. Information claimed as CBI and other information whose disclosure is restricted by statute, which is not included in the official public docket, will not be available for public viewing in EPA's electronic public docket. EPA's policy is that copyrighted material will not be placed in EPA's electronic public docket but will be available only in printed, paper form in the official public docket. To the extent feasible, publicly available docket materials will be made available in EPA's electronic public docket. When a document is selected from the index list in EPA Dockets, the system will identify whether the document is available for viewing in EPA's electronic public docket. Although not all docket materials may be available electronically, you may still access any of the publicly available docket materials through the docket facility identified in Unit I.B.1. EPA intends to work towards providing electronic access to all of the publicly available docket materials through EPA's electronic public docket.

For public commenters, it is important to note that EPA's policy is that public comments, whether submitted electronically or in paper, will be made available for public viewing in EPA's electronic public docket as EPA receives them and without change, unless the comment contains copyrighted material, CBI, or other information whose disclosure is restricted by statute. When EPA identifies a comment containing copyrighted material, EPA will provide a reference to that material in the version of the comment that is placed in EPA's electronic public docket. The entire printed comment, including the copyrighted material, will be available in the public docket.

Public comments submitted on computer disks that are mailed or delivered to the docket will be transferred to EPA's electronic public docket. Public comments that are mailed or delivered to the Docket will be scanned and placed in EPA's electronic public docket. Where practical, physical objects will be photographed, and the photograph will be placed in EPA's electronic public docket along with a brief description written by the docket staff.

C. How and to Whom Do I Submit Comments?

You may submit comments electronically, by mail, or through hand delivery/courier. To ensure proper receipt by EPA, identify the appropriate docket ID number in the subject line on the first page of your comment. Please ensure that your comments are submitted within the specified comment period. Comments received after the close of the comment period will be marked ''late.'' EPA is not required to consider these late comments. If you wish to submit CBI or information that is otherwise protected by statute, please follow the instructions in Unit I.D. Do not use EPA Dockets or e-mail to submit CBI or information protected by statute.

1. *Electronically*. If you submit an electronic comment as prescribed in this unit, EPA recommends that you include your name, mailing address, and an e-mail address or other contact information in the body of your comment. Also include this contact information on the outside of any disk or CD ROM you submit, and in any cover letter accompanying the disk or CD ROM. This ensures that you can be identified as the submitter of the comment and allows EPA to contact you

in case EPA cannot read your comment due to technical difficulties or needs further information on the substance of your comment. EPA's policy is that EPA will not edit your comment, and any identifying or contact information provided in the body of a comment will be included as part of the comment that is placed in the official public docket, and made available in EPA's electronic public docket. If EPA cannot read your comment due to technical difficulties and cannot contact you for clarification, EPA may not be able to consider your comment.

i. *EPA Dockets*. Your use of EPA's electronic public docket to submit comments to EPA electronically is EPA's preferred method for receiving comments. Go directly to EPA Dockets at *http://www.epa.gov/edocket/*, and follow the online instructions for submitting comments. Once in the system, select ''search,'' and then key in docket ID number OPP–2004–0389. The system is an ''anonymous access'' system, which means EPA will not know your identity, e-mail address, or other contact information unless you provide it in the body of your comment.

ii. *E-mail*. Comments may be sent by e-mail to *opp-docket@epa.gov*, Attention: Docket ID Number OPP–2004–0389. In contrast to EPA's electronic public docket, EPA's e-mail system is not an ''anonymous access'' system. If you send an e-mail comment directly to the docket without going through EPA's electronic public docket, EPA's e-mail system automatically captures your e-mail address. E-mail addresses that are automatically captured by EPA's e-mail system are included as part of the comment that is placed in the official public docket, and made available in EPA's electronic public docket.

iii. *Disk or CD ROM*. You may submit comments on a disk or CD ROM that you mail to the mailing address identified in Unit I.C.2. These electronic submissions will be accepted in WordPerfect or ASCII file format. Avoid the use of special characters and any form of encryption.

2. *By mail*. Send your comments to: Public Information and Records Integrity Branch (PIRIB), Office of Pesticide Programs (OPP), Environmental Protection Agency (7502C), 1200 Pennsylvania Ave., NW., Washington, DC 20460–0001, Attention: Docket ID Number OPP–2004–0389.

3. *By hand delivery or courier*. Deliver your comments to: Public Information and Records Integrity Branch (PIRIB), Office of Pesticide Programs (OPP), Environmental Protection Agency, Rm. 119, Crystal Mall #2, 1801 S. Bell St., Arlington, VA, Attention: Docket ID Number OPP–2004–0389. Such deliveries are only accepted during the docket's normal hours of operation as identified in Unit I.B.1.

D. How Should I Submit CBI to the Agency?

Do not submit information that you consider to be CBI electronically through EPA's electronic public docket or by e-mail. You may claim information that you submit to EPA as CBI by marking any part or all of that information as CBI (if you submit CBI on disk or CD ROM, mark the outside of the disk or CD ROM as CBI and then identify electronically within the disk or CD ROM the specific information that is CBI). Information so marked will not be disclosed except in accordance with procedures set forth in 40 CFR part 2.

In addition to one complete version of the comment that includes any information claimed as CBI, a copy of the comment that does not contain the information claimed as CBI must be submitted for inclusion in the public docket and EPA's electronic public docket. If you submit the copy that does not contain CBI on disk or CD ROM, mark the outside of the disk or CD ROM clearly that it does not contain CBI. Information not marked as CBI will be included in the public docket and EPA's electronic public docket without prior notice. If you have any questions about CBI or the procedures for claiming CBI, please consult the person listed under **FOR FURTHER INFORMATION CONTACT**.

E. What Should I Consider as I Prepare My Comments for EPA?

You may find the following suggestions helpful for preparing your comments:

1. Explain your views as clearly as possible.
2. Describe any assumptions that you used.
3. Provide copies of any technical information and/or data you used that support your views.
4. If you estimate potential burden or costs, explain how you arrived at the estimate that you provide.
5. Provide specific examples to illustrate your concerns.
6. Offer alternative ways to improve the registration activity.
7. Make sure to submit your comments by the deadline in this notice.
8. To ensure proper receipt by EPA, be sure to identify the docket ID number assigned to this action in the subject line on the first page of your response. You may also provide the name, date, and **Federal Register** citation.

II. Registration Applications

EPA received applications as follows to register pesticide products containing active ingredients not included in any previously registered products pursuant to the provision of section 3(c)(4) of FIFRA. Notice of receipt of these applications does not imply a decision by the Agency on the applications.

Products Containing Active Ingredients not Included in any Previously Registered Products

1. *File Symbol*: 80917–R. *Applicant*: Shake-Away, 2330 Whitney Avenue, Hamden, CT 06518. *Product Name*: Deer Repellent Granules. Biochemical pesticide. *Active ingredient:* Coyote urine at 5.0%. *Proposed classification/Use*: Animal repellent.

2. *File Symbol*: 80917–U. *Applicant*: Shake-Away. *Product Name*: Small Critter Repellent Granules. Biochemical pesticide. *Active ingredient*: Fox urine at 5.0%. *Proposed classification/Use*: Animal repellent.

3. *File Symbol*: 81853–R. *Applicant*: Heads Up Plant Protectants, Inc., c/o Walter G. Talarek, PC, 1008 Riva Ridge Drive, Great Falls, VA 22066. *Product Name*: Heads Up Plant Protectant. Biochemical pesticide. *Active ingredient*: Extract of Chenopodium Quinoa containing quinoa saponins at 49.65%. *Proposed classification/Use*: Plant protectant.

4. *File Symbol*: 81325–E. *Applicant*: Farma Tech International Corp., 2181 W. San Bruno Avenue, Fresno, CA 93711–2284. *Product Name*: FT-Methyl Eugenol. Biochemical pesticide. *Active ingredient*: Methyl eugenol at 98.00%.*Proposed classification/Use*: Biochemical or semiochemical manufacturing use product.

List of Subjects

Environmental protection, Pesticides and pest.

Dated: November 29, 2004.

Janet L. Andersen,

Director, Biopesticides and Pollution Prevention Division, Office of Pesticide Programs.

[FR Doc. 04–27172 Filed 12–14–04; 8:45am]

BILLING CODE 6560–50–S

ENVIRONMENTAL PROTECTION AGENCY

[OPP–2004–0378; FRL–7688–2]

2,4-D; Notice of Filing a Pesticide Petition to Establish a Permanent Tolerance for a Certain Pesticide Chemical in or on Food

AGENCY: Environmental Protection Agency (EPA).

ACTION: Notice.

SUMMARY: This notice announces the filing of a pesticide petition proposing the establishment of regulations for residues of a certain pesticide chemical in or on various food commodities.

DATES: Comments, identified by docket identification (ID) number OPP–2004–0378, must be received on or before January 14, 2005.

ADDRESSES: Comments may be submitted electronically, by mail, or through hand delivery/courier. Follow the detailed instructions as provided in Unit I. of the **SUPPLEMENTARY INFORMATION**.

FOR FURTHER INFORMATION CONTACT: Joanne I. Miller, Registration Division (7505C), Office of Pesticide Programs, EnvironmentalProtection Agency, 1200 Pennsylvania Ave., NW., Washington, DC 20460–0001; telephone number: (703) 305–6224; e-mail address:*miller.joanne@epamail.epa.gov*.

SUPPLEMENTARY INFORMATION:

I. General Information

A. Does this Action Apply to Me?

You may be potentially affected by this action if you an agricultural producer, food manufacturer, or pesticide manufacturer. Potentially affected entities may include, but are not limited to:

- Crop production (NAICS 111)
- Animal production (NAICS 112)
- Food manufacturing (NAICS 311)
- Pesticide manufacturing (NAICS 32532)

This listing is not intended to be exhaustive, but rather provides a guide for readers regarding entities likely to be affected by this action. Other types of entities not listed in this unit could also be affected. The North American Industrial Classification System (NAICS) codes have been provided to assist you and others in determining whether this action might apply to certain entities. If you have any questions regarding the applicability of this action to a particular entity, consult the person listed under **FOR FURTHER INFORMATION CONTACT**.

B. How Can I Get Copies of this Document and Other Related Information?

1. *Docket*. EPA has established an official public docket for this action under docket ID number OPP–2004–0378. The official public docket consists of the documents specifically referenced in this action, any public comments received, and other information related to this action. Although a part of the official docket, the public docket does not include Confidential Business Information (CBI) or other information whose disclosure is restricted by statute. The official public docket is the collection of materials that is available for public viewing at the Public Information and Records Integrity Branch (PIRIB), Rm. 119, Crystal Mall #2, 1801 S. Bell St., Arlington, VA. This docket facility is open from 8:30 a.m. to 4 p.m., Monday through Friday, excluding legal holidays. The docket telephone number is (703) 305–5805.

2. *Electronic access*. You may access this **Federal Register** document electronically through the EPA Internet under the ''**Federal Register**'' listings at *http://www.epa.gov/fedrgstr/*.

An electronic version of the public docket is available through EPA's electronic public docket and comment system, EPA Dockets. You may use EPA Dockets at *http://www.epa.gov/edocket/* to submit or view public comments, access the index listing of the contents of the official public docket, and to access those documents in the public docket that are available electronically. Although not all docket materials may be available electronically, you may still access any of the publicly available docket materials through the docket facility identified in Unit I.B.1. Once in the system, select ''search'' then key in the appropriate docket ID number.

Certain types of information will not be placed in the EPA Dockets. Information claimed as CBI and other information whose disclosure is restricted by statute, which is not included in the official public docket, will not be available for public viewing in EPA's electronic public docket. EPA's policy is that copyrighted material will not be placed in EPA's electronic public docket but will be available only in printed, paper form in the official public docket. To the extent feasible, publicly available docket materials will be made available in EPA's electronic public docket. When a document is selected from the index list in EPA Dockets, the system will identify whether the document is available for viewing in EPA's electronic public docket. Although not all docket materials may be available electronically, you may still access any of the publicly available docket materials through the docket facility identified in Unit I.B. EPA intends to work towards providing electronic access to all of the publicly available docket materials through EPA's electronic public docket.

For public commenters, it is important to note that EPA's policy is that public comments, whether submitted electronically or in paper, will be made available for public viewing in EPA's electronic public docket as EPA receives them and without change, unless the comment contains copyrighted material, CBI, or other information whose disclosure is restricted by statute. When EPA identifies a comment containing copyrighted material, EPA will provide a reference to that material in the version of the comment that is placed in EPA's electronic public docket. The entire printed comment, including the copyrighted material, will be available in the public docket.

Public comments submitted on computer disks that are mailed or delivered to the docket will be transferred to EPA's electronic public docket. Public comments that are mailed or delivered to the docket will be scanned and placed in EPA's electronic public docket. Where practical, physical objects will be photographed, and the photograph will be placed in EPA's electronic public docket along with a brief description written by the docket staff.

C. How and to Whom Do I Submit Comments?

You may submit comments electronically, by mail, or through hand delivery/courier. To ensure proper receipt by EPA, identify the appropriate docket ID number in the subject line on the first page of your comment. Please ensure that your comments are submitted within the specified comment period. Comments received after the close of the comment period will be marked ''late.'' EPA is not required to consider these late comments. If you wish to submit CBI or information that is otherwise protected by statute, please follow the instructions in Unit I.D. Do not use EPA Dockets or e-mail to submit CBI or information protected by statute.

1. *Electronically*. If you submit an electronic comment as prescribed in this unit, EPA recommends that you include your name, mailing address, and an e-mail address or other contact information in the body of your comment. Also, include this contact information on the outside of any disk or CD ROM you submit, and in any

cover letter accompanying the disk or CD ROM. This ensures that you can be identified as the submitter of the comment, and allows EPA to contact you in case EPA cannot read your comment due totechnical difficulties or needs further information on the substance of your comment. EPA's policy is that EPA will not edit your comment, and any identifying or contact information provided in the body of a comment will be included as part of the comment that is placed in the official public docket, and made available in EPA's electronic public docket. If EPA cannot read your comment due to technical difficulties and cannot contact you for clarification, EPA may not be able to consider your comment.

i. *EPA Dockets*. Your use of EPA's electronic public docket to submit comments to EPA electronically is EPA's preferred method for receiving comments. Go directly to EPA Dockets at *http://www.epa.gov/edocket/*, and follow the online instructions for submitting comments. Once in the system, select ''search,'' and then key in docket ID number OPP–2004–0378. The system is an ''anonymous access'' system, which means EPA will not know your identity, e-mail address, or other contact information unless you provide it in the body of your comment.

ii. *E-mail*. Comments may be sent by e-mail to *opp-docket@epa.gov*, Attention: Docket ID Number OPP–2004–0378. In contrast to EPA's electronic public docket, EPA's e-mail system is not an ''anonymous access'' system. If you send an e-mail comment directly to the docket without going through EPA's electronic public docket, EPA's e-mail system automatically captures your e-mail address. E-mail addresses that are automatically captured by EPA's e-mail system are included as part of the comment that is placed in the official public docket, and made available in EPA's electronic public docket.

iii. *Disk or CD ROM*. You may submit comments on a disk or CD ROM that you mail to the mailing address identified in Unit I.C.2. These electronic submissions will be accepted in WordPerfect or ASCII file format. Avoid the use of special characters and any form of encryption.

2. *By mail*. Send your comments to: Public Information and Records Integrity Branch (PIRIB) (7502C), Office of Pesticide Programs (OPP), Environmental Protection Agency, 1200 Pennsylvania Ave., NW., Washington, DC 20460–0001, Attention: Docket ID Number OPP–2004–0378.

3. *By hand delivery or courier*. Deliver your comments to: Public Information and Records Integrity Branch (PIRIB), Office of Pesticide Programs (OPP), Environmental Protection Agency, Rm. 119, Crystal Mall #2, 1801 S. Bell St., Arlington, VA, Attention: Docket ID Number OPP–2004–0378. Such deliveries are only accepted during the docket's normal hours of operation as identified in Unit I.B.1.

D. How Should I Submit CBI to the Agency?

Do not submit information that you consider to be CBI electronically through EPA's electronic public docket or by e-mail. You may claim information that you submit to EPA as CBI by marking any part or all of that information as CBI (if you submit CBI on disk or CD ROM, mark the outside of the disk or CD ROM as CBI and then identify electronically within the disk or CD ROM the specific information that is CBI). Information so marked will not be disclosed except in accordance with procedures set forth in 40 CFR part 2.

In addition to one complete version of the comment that includes any information claimed as CBI, a copy of the comment that does not contain the information claimed as CBI must be submitted for inclusion in the public docket and EPA's electronic public docket. If you submit the copy that does not contain CBI on disk or CD ROM, mark the outside of the disk or CD ROM clearly that it does not contain CBI. Information not marked as CBI will be included in the public docket and EPA's electronic public docket without prior notice. If you have any questions about CBI or the procedures for claiming CBI, please consult the person listed under **FOR FURTHER INFORMATION CONTACT**.

E. What Should I Consider as I Prepare My Comments for EPA?

You may find the following suggestions helpful for preparing your comments:

1. Explain your views as clearly as possible.
2. Describe any assumptions that you used.
3. Provide copies of any technical information and/or data you used that support your views.
4. If you estimate potential burden or costs, explain how you arrived at the estimate that you provide.
5. Provide specific examples to illustrate your concerns.
6. Make sure to submit your comments by the deadline in this notice.
7. To ensure proper receipt by EPA, be sure to identify the docket ID number assigned to this action in the subject line on the first page of your response. You may also provide the name, date, and **Federal Register** citation.

II. What Action is the Agency Taking?

EPA has received a pesticide petition as follows proposing the establishment and/or amendment of regulations for residues of a certain pesticide chemical in or on various food commodities under section 408 of the Federal Food, Drug, and Cosmetic Act (FFDCA), 21 U.S.C. 346a. EPA has determined that this petition contains data or information regarding the elements set forth in FFDCA section 408(d)(2); however, EPA has not fully evaluated the sufficiency of the submitted data at this time or whether the data support granting of the petition. Additional data may be needed before EPA rules on the petition.

List of Subjects

Environmental protection, Agricultural commodities, Feed additives, Food additives, Pesticides and pests, Reporting and recordkeeping requirements.

Dated: November 30, 2004.

Lois Rossi,

Director, Registration Division, Office of Pesticide Programs.

Summary of Petition

The petitioner summary of the pesticide petition is printed below as required by FFDCA section 408(d)(3). The summary of the petition was prepared by the petitioner and represents the view of the petitioner. The petition summary announces the availability of a description of the analytical methods available to EPA for the detection and measurement of the pesticide chemical residues or an explanation of why no such method is needed.

Interregional Research Project Number 4

PP 4E3060

EPA has received a pesticide petition (4E3060) from the Industry Task Force II on 2,4-D Research Data (Task Force) and its registrant members and affiliates, 1900 K St., NW., Washington, DC 20006 on behalf of The Interregional Research Project Number 4 (IR-4) proposing, pursuant to section 408(d) of the Federal Food, Drug, and Cosmetic Act (FFDCA), 21 U.S.C. 346a(d), to amend 40 CFR part 180 to remove the expiration date of December 31, 2004 for 2,4-D in or on the raw agricultural commodity soybean seed at 0.02 parts per million (ppm) (40 CFR 180.142(a)(11)) (March 8, 2002, 67 FR 10622). EPA has determined that the petition contains data or information

regarding the elements set forth in section 408(d)(2) of the FFDCA; however, EPA has not fully evaluated the sufficiency of the submitted data at this time or whether the data support granting of the petition. Additional data may be needed before EPA rules on the petition.

A. Residue Chemistry

1. *Plant and animal metabolism*. The nature of the residue in plants is adequately understood. Acceptable wheat, lemon, and potato metabolism studies have been submitted. The nature of the residue in animals is adequately understood based upon acceptable ruminant and poultry metabolism studies submitted.

2. *Analytical method*. The residue field tests on soybeans used a gas chromatography (GC) method with electron capture detection (ECD), EN-CAS method ENC-2/93. This GC/ECD method is adequate for determining residues in or on soybeans with a limit of quantitation (LOQ) of 0.01 part per million (ppm).

3. *Magnitude of residues*. In 27 tests on soybeans conducted in Arkansas, Illinois, Louisiana, Missouri, and Tennessee, residues of 2,4-D were nondetectable (<0.01 ppm) in/on all samples of forage, and seeds from soybeans treated with a preplant application of 2,4-D (acid, ester, or amine) at 0.5, 1.25, and 2.75 lbs active ingredient per acre at lX, 2.5X, and 5.5X rates. Residues of 2,4-D were also nondetectable (<0.01 ppm) in/on 21 of 27 hay samples from the same tests. Hay samples with detectable residues of 0.01–0.04 ppm only came from 2.5X and 5.5X applications of the 2,4-D 2-ethylhexyl ester (2-EHE). Since data from the 5.5X application demonstrate that 2,4-D residues on soybean seeds are nondetectable or <0.05 ppm, a soybean processing study is not required. Based on the residue data for soybeans, tolerances of 0.02, 2.0, and 0.02 ppm in or on the raw agricultural commodities soybean seed, hay, and forage are appropriate.

B. Toxicological Profile

1. *Acute toxicity*. The oral lethal dose $(LD)_{50}$ of 2,4-D acid is 699 milligrams/kilogram (mg/kg) in the rat. The dermal LD_{50} in the rabbit is >2,000 mg/kg. The acute inhalation lethal concentration $(LC)_{50}$ in the rat is >1.8 milligrams/liter (mg/l). A primary eye irritation study in the rabbit showed severe irritation. A dermal irritation study in the rabbit showed moderate irritation. A dermal sensitization study in the guinea pig showed no skin sensitization. An acute neurotoxicity study in the rat produced a no observed adverse effect level (NOAEL) of 227 mg/kg for systemic toxicity and a neurobehavioral NOAEL of 67 mg/kgwith a lowest observed adverse effect level (LOAEL) of 227 mg/kg.

2. *Genotoxicty*. Mutagenicity studies including gene mutation, chromosomal aberrations, and direct DNA damage tests were negative for mutagenic effects. 2,4-D acid has been evaluated extensively in open literature in a range of *in vivo* and *in vitro* assays that have included tests with human cells. Overall, the pattern of responses observed in both *in vivo* and *in vitro* tests indicates that 2,4-D acid was not mutagenic, although some cytogenetic effects were observed.

3. *Reproductive and developmental toxicity*. A two-generation reproduction study was conducted in rats with NOAELs for parental and offspring toxicity of 5 milligrams/kilograms/day (mg/kg/day). The LOAELs for this study are established at 20 mg/kg/day based on decreased female body weight/body weight gain (F1), male renal tubule alteration (F0 and F1), and decreased pup body weight (F1b). A teratology study in rabbits given gavage doses at 0, 10, 30, and 90 mg/kg on days 6 through 18 of gestation was negative for developmental toxicity at alldoses tested. A teratology study in rats given gavage doses at 0, 8, 25, and 75 mg/kg on days 6 through 15 of gestation showed maternal toxicity only at 75 mg/kg, which is above the renal clearance threshold for 2,4-D. A NOAEL for fetotoxicity was established at 25 mg/kg/day based on skeletal abnormalities and variations at the 75 mg/kg dose level. The effects on pups occurred in the presence of parental toxicity.

4. *Subchronic toxicity*. A subchronic dietary study was conducted with mice fed diets containing 0, 1, 15, 100, and 300 mg/kg/day with a NOAEL of 15 mg/kg/day. The LOAEL was established at 100 mg/kg/day based on decreased glucose and thyroxine levels, increases in absolute and relative kidney weights, and histopathological lesions in the liver and kidneys. A 90–day dietary study in rats fed diets containing 0, 1, 15, 100, or 300 mg/ kg/day resulted in a NOAEL of 15 mg/kg/day, and an LOAEL of 100 mg/kg/day. The LOAEL was based on decreases in body weight and food consumption, alteration in clinical pathology, changes in organ weights, and histopathological lesions in the kidney, liver, and adrenal glands of both sexes of rats. A 90–day feeding study was conducted in dogs fed diets containing 0, 0.3, 1, 3, and 10 mg/kg/day with a NOAEL of 1 mg/kg/day. The LOAEL was established at 3 mg/kg/day based on decreased body weight/body weight gain and food consumption (males), alterations in clinical chemistry parameters increased blood urea nitrogren (both sexes), creatinine (both sexes), and decreased testis weight (males).

5. *Chronic toxicity*. Previously, the 2,4-D chronic reference dose was based on the chronic dog study. More recently, the Hazard Identification Assessment Review Committee (HIARC) chose to use the rat as the more relevant species for risk assessment. Use of the dog as the basis for regulation exaggerates the apparent severity of effects anticipated because of the limited renal capacity of dogs to excrete organic acids. Points of consideration included: The dog has a decreased clearance relative to humans, rats, mice, and other species. The decreased clearance results in higher blood levels in the dog relative to those found in the rat and consequently, effects are seen at lower dose levels in the dog than in the rat. The half-life of elimination for dogs is significantly longer than for all other species considered. Dogs exhibited half-lives of 31 to 106 hours for doses of 1 to 5 mg/kg. In other species (mice, rats, pigs, cats, and humans), elimination half-lives ranged from 0.75 to 11.6 hours for similar doses. The difference in the elimination pattern among dogs and other mammalian species persuaded HIARC that the rat was a better predictor than the dog of the potential toxicity of 2,4-D to human.

A 2–year oncogenicity study was conducted in mice fed diets containing 0, 1, 15, and 45 mg/kg/day with a NOAEL of 1 mg/kg/day. The systemic LOAEL was established at 15 mg/kg/day based on treatment-related increase in kidney weights in both sexes and microscopic renal lesions in males. There was no treatment-related increase in the incidence of any tumor type. A subsequent 2–year oncogenicity study in mice with a NOAEL of 5 mg/kg/day demonstrated that the NOAEL of 1 mg/kg/day in this earlier study was an artifact of dose selection.

A second 2–year oncogenicity study was conducted in mice fed diets containing 0, 5, 62.5, and 125 mg/kg/day (males) and 0, 5, 150, and 300 mg/kg/day (females). The NOAEL was 5 mg/kg/day and LOAEL was 62.5 (males) and 150 (females) mg/kg/day based on an increased absolute and/or relative kidney weights and an increased incidence of renal microscopic lesions. There was no treatment-related increase in the incidence of any tumor type.

A 2–year feeding/oncogenicity study was conducted in rats fed diets containing 0, 5, 75, and 150 mg/kg/day.

The NOAEL was 5 mg/kg/day and the LOAEL was 75 mg/kg/day based on decreased body weight gain (females) and food consumption (females), alterations in hematology decreased red blood cells (females), hemoglobin (females), platelets (both sexes) and clinical chemistry parameters increased creatinine (both sexes), alanine and aspartate aminotransferase (males), alkaline phosphatase (both sexes), decreased T4 (both sexes), glucose (females), cholesterol (both sexes), and triglycerides (females), increased thyroid weights (both sexes at study termination), decreased testes and ovarian weights, and microscopic lesions in the lungs (females). At the high-dose level, there were microscopic lesions in the eyes, liver, adipose tissue, and lungs. There was no treatment-related increase in the incidence of any tumor.

6. *Animal metabolism*. The metabolism of phenyl ring labeled 14C-2,4-D was studied in the rat following a single intravenous or oral dose of approximately 1 mg/kg/day. At 48 hours after treatment, recovery of radioactivity in urine was in excess of 94%. Parent 2,4-D was the major metabolite (72.9% to 90.5%) found in the urine.

7. *Metabolite toxicology*. Because 2,4-D is rapidly excreted without significant metabolism, the toxicology data on the parent compound adequately represents metabolite toxicology.

8. *Endocrine disruption*. Although tests explicitly designed to evaluate the potential endocrine effects of 2,4-D have not been conducted, large and diverse batteries of toxicology studies are available including acute, subchronic, chronic, reproductive, and developmental toxicity tests. The thyroid effects seen in the subchronic (decreases in T4, follicular cell hypertrophy) and chronic (decreases in T4, increase in thyroid weights) toxicity study in rats occurred only at high doses, which were at or above the threshold of renal clearance. These effects were seen in the presence of other systemic (liver or kidney) toxicity, and there was no evidence of thyroid toxicity in dogs. No evidence of endocrine disruptions were seen in the appropriate parameters that evaluated this effect in the two-generation reproduction study.

C. Aggregate Exposure

1. *Dietary exposure*. Residues are below the limit of quantification (LOQ = 0.01 ppm) in soybeans. Tolerances have been established (40 CFR 180.142) for residues of 2,4-D as the acid or various of its salts and esters, in or on a variety of raw agricultural commodities. In addition, there are also tolerances for 2,4-D for meat, milk, and eggs.

i. *Food*. The Agency has conducted an extensive assessment of the aggregate exposure. Results are reported in the **Federal Register** of March 8, 2002 (FR 67 10622) (FRL–6827–1). The Agency found that acute dietary exposure from food to 2,4-D will occupy 7.3% of the acute population adjusted dose (aPAD) for the U.S. population, 12% of the aPAD for females 13 years and older, 9.4% of the aPAD for infants less than 1 year old, 12% of the aPAD for children 1–6 years old, and 8.8% of the aPAD for children 7–12 years old. The Agency found that chronic dietary exposure to 2,4-D from food will utilize24% of the chronic population adjusted dose (cPAD) for the U.S. population, 20% for females 13 years and older, 19% of the cPAD for infants less than 1 year old, 46% of the cPAD for children 1–6 years old, and 36% of the cPAD for children 7–12 years old.

ii. *Drinking water*. 2,4-D is soluble in water. The average field half-life is 10 days. The chemical is potentially mobile, but rapid degradation in soil and removal by plant uptake minimizes leaching. A Maximum Contaminant Level (MCL) of 0.07 mg/L has been established. In addition, the following health advisories have been established: For a 10-kg child, a range of 1 mg/L from 1–day exposure to 0.1 mg/L for longer-term exposure up to 7 years; for a 70 kg adult, a range of 0.4 mg/L for longer-term exposure to 0.07 mg/L for lifetime exposure.

2. *Non-dietary exposure*. 2,4-D is currently registered for use on the following residential non-food sites: Ornamental turf, lawns, and grasses, golf course turf, recreational areas, and several other indoor, and outdoor uses. 2,4-D is a commonly-used pesticide in non-agricultural settings. There are chemical-specific and site-specific data available to determine the potential risks associated with residential exposures from the registered uses of 2,4-D. Dislodgeable residues taken from 10 2,4-D turf transferable residue studies showed low dislodgeable percent of application, 0.9% at 1 hour, 0.8% at 8 hours, and 0.7% at 24 hours following applications. No detectable residues were found in urine samples supplied by volunteers exposed to sprayed turf 24 hours following application. Intermediate-term post-application exposure is thus not expected.

D. Cumulative Effects

A cumulative risk assessment cannot be performed as part of a human health risk assessment because EPA has not yet made a determination as to which compounds to which humans may be exposed, if any, have a common mechanism of toxicity. There are no available data to determine whether 2,4-D has a common mechanism of toxicity with other substances or how to include this pesticide in a cumulative risk assessment. Unlike other pesticides for which EPA has followed a cumulative risk approach based on a common mechanism of toxicity, 2,4-D does not appear to produce a toxic metabolite produced by other substances.

E. Safety Determination

1. *U.S. population*. For chronic dietary exposure, EPA has established the RfD for 2,4-D at 0.005 mg/kg/day. This RfD is based on a 2–year dietary toxicity study in rats with a NOAEL of 5 mg/kg/day and an uncertainty factor of 1,000. In the most recent revised HED human health risk assessment, EPA used tolerance-level exposure values for most commodities, and averages of field trial data, and processing study factors for small grains, citrus, and sugarcane sugar, and molasses. EPA concluded that for food consumption only, chronic dietary (food only) risks calculated using the Dietary Exposure Evaluation Model (DEEM™) software consumed 2.5–6.9% of the cPAD (2.5–6.7% cPAD using Lifeline). Risk to the general U.S. population was 3.4% of the cPAD (3.2% cPAD using Lifeline). Despite the potential for exposure to 2,4-D in drinking water and from non-dietary, non-occupational exposure, EPA did not expect the aggregate exposure to exceed 100% of the cPAD.

For acute dietary exposure, the NOAEL of 67 mg/kg/day from the rat acute neurotoxicity study should be used for risk assessment. As neurotoxicity is the effect of concern, the acute dietary risk assessment should evaluate acute dietary risk to all population subgroups. Again, relying upon the June 2, 2004, revised HED human health risk assessment, EPA concluded that risk to the general U.S. population was 17% of the aPAD using both DEEM™ and Lifeline.

Regarding dietary cancer risk assessment, EPA's Cancer Peer Review Committee has classified 2,4-D as a Group D chemical (not classifiable as to human carcinogenicity) on the basis that, the evidence is inadequate and cannot be interpreted as showing either the presence or absence of a carcinogenic effect.

2. *Infants and children*. The database on 2,4-D relative to prenatal and postnatal toxicity is complete with respect to current data requirements. In its most recent evaluations, EPA has

determined that, based on the 2,4-D database summarized above, no special FQPA safety factor is needed (1X) since there are no residual uncertainties for prenatal and/or postnatal toxicity. Chronic dietary risk to children 1–2 years of age, the most highly exposed population subgroup, was 6.9% of the cPAD (6.7% cPAD using Lifeline). For acute dietary risk, the most highly exposed population subgroup using both DEEM™ and Lifeline was children 1–2 years of age; risks were 33% and 30% of the aPAD, respectively.

F. International Tolerances

There are no Codex, Canadian, or Mexican maximum residue limitsestablished for 2,4-D on soybeans.

[FR Doc. 04–27173 Filed 12–14–04; 8:45 am]

BILLING CODE 6560–50–S

FEDERAL COMMUNICATIONS COMMISSION

Notice of Public Information Collection(s) Being Submitted to OMB for Review and Approval

December 8, 2004.

SUMMARY: The Federal Communications Commissions, as part of its continuing effort to reduce paperwork burden invites the general public and other Federal agencies to take this opportunity to comment on the following information collection, as required by the Paperwork Reduction Act of 1995, Public Law 104–13. An agency may not conduct or sponsor a collection of information unless it displays a currently valid control number. No person shall be subject to any penalty for failing to comply with a collection of information subject to the Paperwork Reduction Act (PRA) that does not display a valid control number. Comments are requested concerning (a) whether the proposed collection of information is necessary for the proper performance of the functions of the Commission, including whether the information shall have practical utility; (b) the accuracy of the Commission's burden estimate; (c) ways to enhance the quality, utility, and clarity of the information collected; and (d) ways to minimize the burden of the collection of information on the respondents, including the use of automated collection techniques or other forms of information technology.

DATES: Written comments should be submitted on or before January 14, 2005. If you anticipate that you will be submitting comments, but find it difficult to do so within the period of time allowed by this notice, you should advise the contact listed below as soon as possible.

ADDRESSES: Direct all comments to Cathy Williams, Federal Communications Commission, Room 1–C823, 445 12th Street, SW., Washington, DC 20554 or via the Internet to *Cathy.Williams@fcc.gov* or Kristy L. LaLonde, Office of Management and Budget (OMB), Room 10236 NEOB, Washington, DC 20503, (202) 395–3087 or via the Internet at *Kristy_L._LaLonde@omb.eop.gov*.

FOR FURTHER INFORMATION CONTACT: For additional information or copy of the information collection(s) contact Cathy Williams at (202) 418–2918 or via the Internet at *Cathy.Williams@fcc.gov*.

SUPPLEMENTARY INFORMATION:

OMB Control Number: 3060–0095.

Title: Multi-Channel Video Programming Distributors Annual Employment Report, FCC Form 395–A.

Form Number: FCC Form 395–A.

Type of Review: Extension of a currently approved collection.

Respondents: Business or other for-profit entities.

Number of Respondents: 2,500.

Estimated Time Per Response: 53 minutes (0.88 hours).

Frequency of Response: Recordkeeping requirement; Annual reporting requirement; Once every five years.

Total Annual Burden: 2,200 hours.

Total Annual Cost: None.

Privacy Impact Assessment: No impact(s).

Needs and Uses: FCC Form 395–A, ''The Multi-Channel Video Programming Distributor Annual Employment Report,'' is a data collection device used to assess industry employment trends and provide reports to Congress. The report identifies employees by gender and race/ethnicity in fifteen job categories. FCC Form 395–A contains a grid which collects data on full and part-time employees and requests a list of employees by job title, indicating the job category and full or part-time status of the position. Every cable entity with 6 or more full-time employees and all Satellite Master Antenna Television Systems (SMATV) serving 50 or more subscribers and having 6 or more full-time employees must complete FCC Form 395–A in its entirety and file it by September 30 each year. However, cable entities with 5 or fewer full-time employees are not required to file but if they do, they need to complete and file only Sections I, II and VIII of the FCC Form 395–A, and thereafter need not file again unless their employment increases. In addition, cable entities with 6 or more full-time employees will file a Supplemental Investigation Sheet once every 5 years.

On June 4, 2004, the FCC released the Third Report and Order and Fourth Notice of Proposed Rulemaking (3rd R&O), In the Matter of Review of Commission's Broadcast and Cable Equal Employment Opportunity Rules and Policies, MM Docket No. 98–204, FCC 04–103, in which it considers issues relating to the Annual Employment Report forms, including FCC Form 395–A, ''The Multi-Channel Video Programming Distributor Annual Employment Report.'' In the 3rd R&O, the Commission is adopting revised rules for MVPDs to file FCC Form 395–A, which cable and other MVPDs will use to file annual employment reports. The intent of this 3rd R&O is to update rules for MVPDs to file Form 395–A consistent with new rules adopted in the 2nd R&O. The intent of the Fourth Notice of Proposed Rulemaking is to provide time for cable and other MVPDs and the public to address the issue of whether the Commission should keep these forms confidential after they are filed. With the effective date of the rule revisions adopted in the 3rd R&O, MVPDs and broadcasters must start keeping records of their employees so they can prepare their annual employment reports that were due to be filed on September 30, 2004.

OMB Control Number: 3060–0171.

Title: Section 73.1125, Station Main Studio Location.

Form Number: Not applicable.

Type of Review: Revision of a currently approved collection.

Respondents: Business or other for-profit entities.

Number of Respondents: 72.

Estimated Time Per Response: 0.5–2 hours.

Frequency of Response: On occasion reporting requirement.

Total Annual Burden: 135 hours.

Total Annual Cost: $87,780.00.

Privacy Impact Assessment: No impact(s).

Needs and Uses: On March 14, 2002, the Commission released an Order, Establishment of the Media Bureau and Other Organizational Changes, DA No. 02–577, the Commission amended 47 CFR 73.1125(d) to reflect the reorganization of the existing Cable Services and Mass Media Bureaus into a new Media Bureau. Section 73.1125(d) requires licensees to receive written authority to locate a main studio outside the locations specified in paragraph (a) or (c) of this rule section for the first time must be obtained from the Audio Division, Media Bureau for AM and FM stations, or the Video Division for TV

and Class A television stations before the studio may be moved to that location. Where the main studio is already authorized at a location outside those specified in paragraph (a) or (c) of this rule section, and the licensee or permittee desires to specify a new location also located outside those locations, written authority must also be received from the Commission prior to the relocation of the main studio. Authority for these changes may be requested by filing a letter with an explanation of the proposed changes with the appropriate division. Licensees or permittees should also be aware that the filing of such a letter request does not imply approval of the relocation request, because each request is addressed on case-by-case basis. Commercial AM, FM, TV or Class A TV licensees or permittees much pay a fee when filing a request letter under 47 CFR 1.1104.

OMB Control Number: 3060–0390.

Title: Broadcast Station Annual Employment Report, FCC Form 395–B.

Form Number: FCC Form 395–B.

Type of Review: Extension of a currently approved collection.

Respondents: Business or other for-profit entities; Not-for-profit institutions.

Number of Respondents: 14,000.

Estimated Time Per Response: 0.88 hours.

Frequency of Response: Annual reporting requirement.

Total Annual Burden: 12,320 hours.

Total Annual Cost: None.

Privacy Impact Assessment: No impact(s).

Needs and Uses: ''The Broadcast Station Annual Employment Report,'' is used to assess industry employment trends and provide reports to Congress. Licensees with five or more full-time employees are required to file FCC Form 395–B on or before September 30th of each year. The form is a data collection device used to compile statistics on the workforce employed by broadcast licensees/permittees. The report identifies each staff member by gender and race/ethnicity in each of the nice major job categories. On June 4, 2004, the FCC released the Third Report and Order and Fourth Notice of Proposed Rulemaking (3rd R&O), In the Matter of Review of the Commission's Broadcast and Cable Equal Employment Opportunity Rules and Policies, MM Docket No. 98–204, FCC 04–103, in which it considers issues relating to the Annual Employment Report forms, including FCC Form 395–B, ''The Broadcast Station Annual Employment Report.'' In the 3rd R&O, the Commission is adopting revised rules requiring broadcasters and multi-channel video programming distributors (MVPDs) to file annual employment reports. Radio and television broadcasters will use FCC Form 395–B to file annual employment reports. The intent of this 3rd R&O is to reinstate and update requirements for broadcasters and MVPDs to file annual employment reports. The intent of the Fourth Notice of Proposed Rulemaking is to provide time for MVPDs, broadcast licensees, and the public to address the issue of whether the Commission should keep these forms confidential after they are filed. With the effective date of the rule revisions adopted in the 3rd R&O, MVPDs, and broadcasters must start keeping records of their employees so they can prepare their annual employment reports that was due to be filed on or before September 30, 2004.

Federal Communications Commission.

Marlene H. Dortch,

Secretary.

[FR Doc. 04–27436 Filed 12–14–04; 8:45 am]

BILLING CODE 6712–01–P

FEDERAL COMMUNICATIONS COMMISSION

Notice of Public Information Collection(s) Being Reviewed by the Federal Communications Commission

December 6, 2004.

SUMMARY: The Federal Communications Commission, as part of its continuing effort to reduce paperwork burden invites the general public and other Federal agencies to take this opportunity to comment on the following information collection(s), as required by the Paperwork Reduction Act of 1995, Public Law 104–13. An agency may not conduct or sponsor a collection of information unless it displays a currently valid control number. No person shall be subject to any penalty for failing to comply with a collection of information subject to the Paperwork Reduction Act (PRA) that does not display a valid control number. Comments are requested concerning (a) whether the proposed collection of information is necessary for the proper performance of the functions of the Commission, including whether the information shall have practical utility; (b) the accuracy of the Commission's burden estimate; (c) ways to enhance the quality, utility, and clarity of the information collected; and (d) ways to minimize the burden of the collection of information on the respondents, including the use of automated collection techniques or other forms of information technology.

DATES: Written Paperwork Reduction Act (PRA) comments should be submitted on or before January 14, 2005. If you anticipate that you will be submitting comments, but find it difficult to do so within the period of time allowed by this notice, you should advise the contact listed below as soon as possible.

ADDRESSES: Direct all comments regarding this Paperwork Reduction Act submission to Judith B. Herman, Federal Communications Commission, Room 1–C804, 445 12th Street, SW., DC 20554 or via the Internet to *Judith-B.Herman@fcc.gov*.

FOR FURTHER INFORMATION CONTACT: For additional information or copies of the information collection(s), contact Judith B. Herman at 202–418–0214 or via the Internet at *Judith-B.Herman@fcc.gov*.

SUPPLEMENTARY INFORMATION:

OMB Control No.: 3060–0799.

Title: FCC Ownership Disclosure Information for the Wireless Telecommunications Services.

Form No: FCC Form 602.

Type of Review: Revision of a currently approved collection.

Respondents: Business or other for-profit, not-for-profit institutions, and state, local and tribal government.

Number of Respondents: 13,565.

Estimated Time Per Response: .5–1.5 hours.

Frequency of Response: On occasion reporting requirement and third party disclosure requirement.

Total Annual Burden: 3,565 hours.

Total Annual Cost: $178,200.

Privacy Act Impact Assessment: Not applicable.

Needs and Uses: The Commission is revising the FCC Form 60–2 to request information from cellular filers reporting cellular cross-ownership holding required pursuant to 47 CFR 1.919 of the Commission's rules. The information will be used by the Commission to determine whether the filer is legally, technically and financially qualified to be licensed. Without such information the Commission could not determine whether to issue the licenses to the applicants that provide telecommunications services to the public and therefore fulfill its statutory responsibilities in accordance with the Communications Act of 1934, as amended. It will also be used to update the database and provide for proper use of the frequency spectrum.

OMB Control No.: 3060–1059.

Title: Global Mobile Personal Communications by Satellite (GMPCS)/E911 Call Centers.

Form No.: Not applicable.

Type of Review: Revision of a currently approved collection.

Respondents: Business or other for-profit.

Number of Respondents: 25.

Estimated Time Per Response: 1 hour.

Frequency of Response: Annual reporting requirement and recordkeeping requirement.

Total Annual Burden: 25 hours.

Total Annual Cost: $5,000.

Privacy Act Impact Assessment: Not applicable.

Needs and Uses: The Commission has revised this information collection to remove the pre-implementation status reports which were a one-time only requirement that has now past. This information collection has removed the burden hours and costs associated with this one-time requirement. Additionally, the Commission is now requiring mandatory electronic filing of the post-implementation reports. The mandatory electronic filing requirement of these reports is due to the Commission annually beginning on October 15, 2005.

The information collections that result from the E911 Scope Second Report and Order, FCC 04–201, IB Docket No. 99–67, are used by the Commission under its authority to license commercial satellite services in the United States. Without the collection of information that would result from these rules, the Commission would not be able to monitor the Mobile Satellite Services (MSS) carriers' establishment of call centers which are essential to provide emergency services, such as handling emergency 911 telephone calls from American citizens. The recordkeeping and reporting requirements include data on MSS call center use such as the aggregate number of calls that the call centers receive and the number of calls that required forwarding to a local Public Safety Answering Point (PSAP). The Commission will use this data to monitor compliance with the call center requirement and track usage trends. Such information would be useful to the Commission in considering whether FCC rules require modification to accommodate the changing market.

Federal Communications Commission.

Marlene H. Dortch,

Secretary.

[FR Doc. 04–27437 Filed 12–14–04; 8:45 am]

BILLING CODE 6712–01–P

FEDERAL MARITIME COMMISSION

Notice of Agreements Filed

The Commission hereby gives notice of the filing of the following agreements under the Shipping Act of 1984. Interested parties may obtain copies of agreements by contacting the Commission's Office of Agreements at 202–523–5793 or via e-mail at *tradeanalysis@fmc.gov.* Interested parties may submit comments on an agreement to the Secretary, Federal Maritime Commission, Washington, DC 20573, within 10 days of the date this notice appears in the **Federal Register**.

Agreement No.: 011268–016.

Title: New Zealand/United States Interconference and Carrier Discussion Agreement.

Parties: New Zealand/United States Container Lines Association; P&O Nedlloyd Limited; Hamburg-Süd; LauritzenCool AB; Australia-New Zealand Direct Line; FESCO Ocean Management Ltd., A.P. Moller-Maersk A/S; and Lykes Lines Limited, LLC.

Filing Party: Wayne R. Rohde, Esq.; Sher & Blackwell, LLP; 1850 M Street NW., Suite 900; Washington, DC 20036.

Synopsis: The amendment would update, clarify, and reorganize the authority contained in the agreement, delete obsolete or unnecessary language, make miscellaneous technical corrections, change the name of the agreement, and restate the agreement.

Agreement No.: 011865–002.

Title: CMA CGM/LT Amerigo Express MUS Slot Charter Agreement.

Parties: CMA CGM, S.A. and Lloyd Triestino di Navigazione S.p.A.

Filing Party: Paul M. Keane, Esq.; Cichanowicz, Callan, Keane, Vengrow & Textor, LLP; 61 Broadway, Suite 3000; New York, NY 10006.

Synopsis: The amendment recasts the agreement as a reciprocal space-chartering agreement. The parties have requested expedited review.

By Order of the Federal Maritime Commission.

Dated: December 10, 2004.

Bryant L. VanBrakle,

Secretary.

[FR Doc. 04–27440 Filed 12–14–04; 8:45 am]

BILLING CODE 6730–01–P

FEDERAL MARITIME COMMISSION

Ocean Transportation Intermediary License Reissuances

Notice is hereby given that the following Ocean Transportation Intermediary licenses have been reissued by the Federal Maritime Commission pursuant to section 19 of the Shipping Act of 1984, as amended by the Ocean Shipping Reform Act of 1998 (46 U.S.C. app. 1718) and the regulations of the Commission pertaining to the licensing of Ocean Transportation Intermediaries, 46 CFR 515.

License No.	Name/Address	Date reissued
004108N	DRT International, Incorporated, 7762 NW. 72nd Avenue, Medley, FL 33166	October 24, 2004.
004263N	Distribution Transportation Services Company, 827 West Terra Lane, O'Fallon, MO 63366	September 20, 2004.

Sandra L. Kusumoto,

Director, Bureau of Certification and Licensing.

[FR Doc. 04–27442 Filed 12–14–04; 8:45 am]

BILLING CODE 6730–01–P

FEDERAL MARITIME COMMISSION

Ocean Transportation Intermediary License Revocations

The Federal Maritime Commission hereby gives notice that the following Ocean Transportation Intermediary licenses have been revoked pursuant to section 19 of the Shipping Act of 1984 (46 U.S.C. app. 1718) and the regulations of the Commission pertaining to the licensing of Ocean Transportation Intermediaries, effective on the corresponding date shown below:

License Number: 017473F.

Name: Eagle Pacific, Corp.

Address: 182–16 149th Road, Rm. 288, Jamaica, NY 11413.

Date Revoked: November 12, 2004.

Reason: Failed to maintain a valid bond.

License Number: 003621F.

Name: I.C.C. Products, Inc. dba I.C.C. Cargo Services.

Address: 9939 NW. 89th Avenue, Bay 2, Medley, FL 33178.

Date Revoked: November 15, 2004.

Reason: Failed to maintain a valid bond.

License Number: 017600N.

Name: KTL International, Inc.

Address: 1280 Louis Avenue, Elk Grove Village, IL 60007.

Date Revoked: November 12, 2004.

Reason: Surrendered license voluntarily.

License Number: 015646N.

Name: Universe Freight Brokers, Inc. dba Seacarriers.

Address: 3625 NW. 82nd Avenue, Suite 401, Miami, FL 33126.

Date Revoked: October 30, 2004.

Reason: Failed to maintain a valid bond.

Sandra L. Kusumoto,

Director, Bureau of Certification and Licensing.

[FR Doc. 04–27441 Filed 12–14–04; 8:45 am]

BILLING CODE 6730–01–P

FEDERAL RESERVE SYSTEM

Change in Bank Control Notices; Acquisition of Shares of Bank or Bank Holding Companies

The notificants listed below have applied under the Change in Bank Control Act (12 U.S.C. 1817(j)) and § 225.41 of the Board's Regulation Y (12 CFR 225.41) to acquire a bank or bank holding company. The factors that are considered in acting on the notices are set forth in paragraph 7 of the Act (12 U.S.C. 1817(j)(7)).

The notices are available for immediate inspection at the Federal Reserve Bank indicated. The notices also will be available for inspection at the office of the Board of Governors. Interested persons may express their views in writing to the Reserve Bank indicated for that notice or to the offices of the Board of Governors. Comments must be received not later than December 29, 2004.

A. Federal Reserve Bank of Atlanta (Sue Costello, Vice President) 1000 Peachtree Street, N.E., Atlanta, Georgia 30303:

1. Evan R. Marbin, North Miami Beach, Florida, individually and as trustee of The SEE Trust, Miami, Florida, The SEE Trust, Miami, Florida, and Sherrie Marbin, North Miami Beach, Florida, to retain voting shares of Transatlantic Bank, Miami, Florida.

B. Federal Reserve Bank of Kansas City (Donna J. Ward, Assistant Vice President) 925 Grand Avenue, Kansas City, Missouri 64198–0001:

1. Charles W. Masner and Ella C. Masner, both of Anthony, Kansas; to acquire control of Olathe Bancorporation, Inc., and thereby indirectly acquire control of Olathe State Bank, both in Olathe, Colorado.

Board of Governors of the Federal Reserve System, December 9, 2004.

Robert deV. Frierson,

Deputy Secretary of the Board.

[FR Doc. 04–27475 Filed 12–14–04; 8:45 am]

BILLING CODE 6210–01–S

FEDERAL RESERVE SYSTEM

Formations of, Acquisitions by, and Mergers of Bank Holding Companies

The companies listed in this notice have applied to the Board for approval, pursuant to the Bank Holding Company Act of 1956 (12 U.S.C. 1841 *et seq.*) (BHC Act), Regulation Y (12 CFR Part 225), and all other applicable statutes and regulations to become a bank holding company and/or to acquire the assets or the ownership of, control of, or the power to vote shares of a bank or bank holding company and all of the banks and nonbanking companies owned by the bank holding company, including the companies listed below.

The applications listed below, as well as other related filings required by the Board, are available for immediate inspection at the Federal Reserve Bank indicated. The application also will be available for inspection at the offices of the Board of Governors. Interested persons may express their views in writing on the standards enumerated in the BHC Act (12 U.S.C. 1842(c)). If the proposal also involves the acquisition of a nonbanking company, the review also includes whether the acquisition of the nonbanking company complies with the standards in section 4 of the BHC Act (12 U.S.C. 1843). Unless otherwise noted, nonbanking activities will be conducted throughout the United States. Additional information on all bank holding companies may be obtained from the National Information Center website at *www.ffiec.gov/nic/*.

Unless otherwise noted, comments regarding each of these applications must be received at the Reserve Bank indicated or the offices of the Board of Governors not later than January 10, 2005.

A. Federal Reserve Bank of Chicago (Patrick Wilder, Assistant Vice President) 230 South LaSalle Street, Chicago, Illinois 60690–1414:

1. American Central Bancorporation, Inc., Springfield, Illinois; to merge with American Central Financial Group, Inc., Springfield, Illinois, and thereby indirectly acquire Farmers State Bank of Fulton County, Lewistown, Illinois, and The Bank, Charleston, Illinois.

Board of Governors of the Federal Reserve System, December 9, 2004.

Robert deV. Frierson,

Deputy Secretary of the Board.

[FR Doc. 04–27476 Filed 12–14–04; 8:45 am]

BILLING CODE 6210–01–S

DEPARTMENT OF HEALTH AND HUMAN SERVICES

Food and Drug Administration

[Docket Nos. 2003M–0172, 2004M–0309, 2004M–0433, 2004M–0341, 2004M–0356, 2004M–0403, 2004M–0310, 2004M–0312, 2004M–0313, 2004M–0342, 2004M–0323, 2004M–0345, 2004M–0350, 2004M–0387, 2004M–0415, 2004M–0388, and 2004M–0430]

Medical Devices; Availability of Safety and Effectiveness Summaries for Premarket Approval Applications

AGENCY: Food and Drug Administration, HHS.

ACTION: Notice.

SUMMARY: The Food and Drug Administration (FDA) is publishing a list of premarket approval applications (PMAs) that have been approved. This list is intended to inform the public of the availability of safety and effectiveness summaries of approved PMAs through the Internet and the agency's Division of Dockets Management.

ADDRESSES: Submit written requests for copies of summaries of safety and effectiveness to the Division of Dockets Management (HFA–305), Food and Drug Administration, 5630 Fishers Lane, rm. 1061, Rockville, MD 20852. Please cite the appropriate docket number as listed in table 1 of this document when submitting a written request. See the **SUPPLEMENTARY INFORMATION** section for electronic access to the summaries of safety and effectiveness.

FOR FURTHER INFORMATION CONTACT: Thinh Nguyen, Center for Devices and Radiological Health (HFZ–402), Food and Drug Administration, 9200 Corporate Blvd., Rockville, MD 20850, 301–594–2186.

SUPPLEMENTARY INFORMATION:

I. Background

In the Federal Register of January 30, 1998 (63 FR 4571), FDA published a final rule that revised 21 CFR 814.44(d) and 814.45(d) to discontinue individual publication of PMA approvals and denials in the **Federal Register**. Instead, the agency now posts this information on the Internet on FDA's home page at *http://www.fda.gov*. FDA believes that this procedure expedites public

notification of these actions because announcements can be placed on the Internet more quickly than they can be published in the **Federal Register**, and FDA believes that the Internet is accessible to more people than the **Federal Register**.

In accordance with section 515(d)(4) and (e)(2) of the Federal Food, Drug, and Cosmetic Act (the act) (21 U.S.C. 360e(d)(4) and (e)(2)), notification of an order approving, denying, or withdrawing approval of a PMA will continue to include a notice of opportunity to request review of the order under section 515(g) of the act. The 30-day period for requesting reconsideration of an FDA action under § 10.33(b) (21 CFR 10.33(b)) for notices announcing approval of a PMA begins on the day the notice is placed on the Internet. Section 10.33(b) provides that FDA may, for good cause, extend this 30-day period. Reconsideration of a denial or withdrawal of approval of a PMA may be sought only by the applicant; in these cases, the 30-day period will begin when the applicant is notified by FDA in writing of its decision.

The regulations provide that FDA publish a quarterly list of available safety and effectiveness summaries of PMA approvals and denials that were announced during that quarter. The following is a list of approved PMAs for which summaries of safety and effectiveness were placed on the Internet from July 1, 2004, through September 30, 2004. There were no denial actions during this period. The list provides the manufacturer's name, the product's generic name or the trade name, and the approval date.

TABLE 1.—LIST OF SAFETY AND EFFECTIVENESS SUMMARIES FOR APPROVED PMAS MADE AVAILABLE FROM JULY 1, 2004, THROUGH SEPTEMBER 30, 2004

PMA No./Docket No.	Applicant	Trade Name	Approval Date
P020026/2003M–0172	Cordis Corp.	CYPHER SIROLIMUS-ELUTING CORONARY STENT ON THE RAPTOR OVER-THE-WIRE DELIVERY SYSTEM OR RAPTORRAIL RAPID EXCHANGE DELIVERY SYSTEM	April 24, 2003
P020023/2004M–0309	Q-Med Scandinavia, Inc.	RESTYLANE INJECTABLE GEL	December 12, 2003
P030044/2004M–0433	DakoCytomation California, Inc.	DAKOCYTOMATION EGFR PHARMDX	February 12, 2004
P030024/2004M–0341	Ortho-Clinical Diagnostics, Inc.	VITROS IMMUNODIAGNOSTIC PRODUCTS ANTI-HBC REAGENT PACK AND CALIBRATOR	March 4, 2004
P030026/2004M–0356	Ortho-Clinical Diagnostics, Inc.	VITROS IMMUNODIAGOSTIC PRODUCTS ANTI-HBC IGM REAGENT PACK AND CALIBRATOR	March 4, 2004
P030025/2004M–0403	Boston Scientific Corp.	TAXUS EXPRESS2 PACLITAXEL-ELUTING CORONARY STENT SYSTEM (MONORAIL AND OVER-THE-WIRE)	March 4, 2004
P020030/2004M–0310	Ela Medical, Inc.	STELID II/STELIX/STELIX II ENDOCARDIAL PACING LEAD	June 17, 2004
P970043 (S015)/2004M–0312	Alcon Laboratories, Inc.	LADARVISION 4000 EXCIMER LASER SYSTEM	June 29, 2004
P030054/2004M–0313	St. Jude Medical, Inc.	ST. JUDE MEDICAL EPIC HF SYSTEM	June 30, 2004
P040008/2004M–0342	bioMerieux, Inc.	VIDAS TPSA ASSAY	July 8, 2004
P030012/2004M–0323	R2 Technology, Inc.	IMAGECHECKER CT CAD SOFTWARE SYSTEM (MODEL LN–1000)	July 8, 2004
P010061/2004M–0345	Photo Cure, ASA	CURELIGHT BROADBAND (MODEL CURELIGHT 01)	July 28, 2004
P030050/2004M–0350	Dermik Laboratories	SCULPTRA	August 3, 2004
P030010/2004M–0387	Siemens Medical Solutions USA, Inc.	SIEMENS MAMMOMAT NOVATIONDR FULL FIELD DIGITAL MAMMOGRAPHY SYSTEM	August 20, 2004
H030009/2004M–0415	Synthes (USA)	VERTICAL EXPANDABLE PROSTHETIC TITANIUM RIB (VEPTR)	August 24, 2004
P040012/2004M–0388	Guidant Corp.	ACULINK CAROTID STENT SYSTEM & RX ACCULINK CAROTID STENT SYSTEM	August 30, 2004
P010012 (S026)/2004M–0430	Guidant Corp.	CONTAK CD (MODEL 1823), CONTAK CD 2 (MODELS H115 & H119), RENEWAL (MODEL H135), RENEWAL 3 (MODELS H170, H175, H177, & H179)	September 14, 2004

II. Electronic Access

Persons with access to the Internet may obtain the documents at *http://www.fda.gov/cdrh/pmapage.html.*

Dated: December 3, 2004.

Linda S. Kahan,

Deputy Director, Center for Devices and Radiological Health.

[FR Doc. 04–27387 Filed 12–14–04; 8:45 am]

BILLING CODE 4160–01–S

DEPARTMENT OF HEALTH AND HUMAN SERVICES

Health Resources and Services Administration

Advisory Committee on Heritable Disorders and Genetic Diseases in Newborns and Children; Notice of Meeting

In accordance with section 10(a)(2) of the Federal Advisory Committee Act (Public Law 92–463), notice is hereby given of the following meeting:

Name: Advisory Committee on Heritable Disorders and Genetic Diseases in Newborns and Children (ACHDGDNC).

Dates and Times: January 13, 2005, 9 a.m. to 5 p.m. January 14, 2005, 9 a.m. to 5 p.m.

Place: Ronald Reagan Building and International Trade Center, 1300 Pennsylvania Avenue, NW., Washington, DC 20004.

Status: The meeting will be open to the public with attendance limited to space availability.

Purpose: The Advisory Committee provides advice and recommendations concerning the grants and projects authorized under the Heritable Disorders Program and technical information to develop policies and priorities for this program that will enhance the ability of State and local health agencies to provide for newborn and child screening, counseling and health care services for newborns and children having or at risk for heritable disorders. Specifically, the Committee shall advise and guide the Secretary regarding the most appropriate application of universal newborn screening tests, technologies, policies, guidelines and programs for effectively reducing morbidity and mortality in newborns and children having or at risk for heritable disorders.

Agenda: The first day will be devoted to presentations on and a discussion of the status of the report from the American College of Medical Genetics; an update of the current status of state specific issues; presentations on the Rare Disease Centers of Excellence funded by the National Institutes of Health and the Regional Genetics; and Newborn Screening Collaboratives funded by the Health Resources and Services Administration. The presentations will be followed on the first and second day with more detailed discussions aimed at formulating the ACHDGDNC issues agenda.

Proposed agenda items are subject to change.

Time will be provided each day for public comment. Individuals who wish to provide public comment or who plan to attend the meeting and need special assistance, such as sign language interpretation or other reasonable accommodations, should notify the ACHDGDNC Executive Secretary, Michele A. Lloyd-Puryear, M.D., Ph.D. (contact information provided below).

Contact Person: Anyone interested in obtaining a roster of members or other relevant information should write or contact Michele A. Lloyd-Puryear, M.D., Ph.D., Maternal and Child Health Bureau, Health Resources and Services Administration, Room 18A–19, Parklawn Building, 5600 Fishers Lane, Rockville, Maryland 20857, Telephone (301) 443–1080. Information on the Advisory Committee is available at *http://mchb.hrsa.gov/programs/genetics/committee.*

Dated: December 8, 2004.

Tina M. Cheatham,

Director, Division of Policy Review and Coordination.

[FR Doc. 04–27388 Filed 12–14–04; 8:45 am]

BILLING CODE 4165–15–P

DEPARTMENT OF HEALTH AND HUMAN SERVICES

National Institutes of Health

National Cancer Institute; Notice of Meeting

Pursuant to section 10(d) of the Federal Advisory Committee Act, as amended (5 U.S.C. Appendix 2), notice is hereby given of the meeting of the President's Cancer Panel.

The meeting will be open to the public as indicated below, with attendance limited to space available. Individuals who plan to attend and need special assistance, such as sign language interpretation or other reasonable accommodations, should notify the Contact Person listed below in advance of the meeting.

The meeting will be closed to the public in accordance with the provisions set forth in section 552b(c)(9)(B), Title 5 U.S.C., as amended, because the premature disclosure of information and the discussions would likely to significantly frustrate implementation of recommendations.

Name of Committee: President's Cancer Panel.

Date: January 24–25, 2005.

Open: January 24, 2005, 8 a.m. to 4 p.m.

Agenda: Translating Research to Reduce Burden of Cancer.

Place: Memorial Sloan-Kettering Cancer Center, 1275 York Avenue, New York, NY 10021.

Closed: January 25, 2005, 9 a.m. to 12 p.m.

Agenda: The Panel will supplement its public hearings with discussion of prepublication manuscripts on Translating Research into Clinical Practice. These manuscripts have been provided by their authors with the understanding that the Panel will not break prepublication embargo conditions.

Place: Memorial Sloan-Kettering Cancer Center, 1275 York Avenue, New York, NY 10021.

Contact Person: Maureen O. Wilson, PhD, Executive Secretary, National Cancer Institute, National Institutes of Health, 31 Center Drive, Building 31, Room 3A18, Bethesda, MD 20892, 301/496–1148.

Any interested person may file written comments with the committee by forwarding the comments to the Contact Person listed on this notice. The comments should include the name, address, telephone number and, when applicable, the business or professional affiliation of the interested person.

Information is also available on the Institute's/Center's home page: *deainfo.nci.nih.gov/advisory/pcp/pcp.htm,* where an agenda and any additional information for the meeting will be posed when available.

(Catalogue of Federal Domestic Assistance Program Nos. 93.392, Cancer Construction; 93.393, Cancer Cause and Prevention Research; 93.394, Cancer Detection and Diagnosis Research; 93.395, Cancer Treatment Research; 93.396, Cancer Biology Research; Cancer Centers Support; 93.398, Cancer Research Manpower; 93.399, Cancer Control, National Institutes of Health, HHS)

Dated: December 6, 2004.

LaVerne Y. Stringfield,

Director, Office of Federal Advisory Committee Policy.

[FR Doc. 04–27407 Filed 12–14–04; 8:45 am]

BILLING CODE 4140–01–M

DEPARTMENT OF HEALTH AND HUMAN SERVICES

National Institutes of Health

National Heart, Lung, and Blood Institute; Notice of Closed Meeting

Pursuant to section 10(d) of the Federal Advisory Committee Act, as amended (5 U.S.C. Appendix 2), notice is hereby given of the following meeting.

The meeting will be closed to the public in accordance with the provisions set forth in sections 552b(c)(4) and 552b(c)(6), Title 5 U.S.C., as amended. The grant applications and the discussions could disclose confidential trade secrets or commercial property such as patentable material, and personal information concerning individuals associated with the grant applications, the disclosure of which would constitute a clearly unwarranted invasion of personal privacy.

Name of Committee: National Heart, Lung, and Blood Institute Special Emphasis Panel

Review of Clinical Investigator Awards (K08s).

Date: December 17, 2004.

Time: 12 p.m. to 2 p.m.

Agenda: To review and evaluate grant applications.

Place: National Institutes of Health, 6701 Rockledge Drive, Bethesda, MD 20892 (Telephone Conference Call).

Contact Person: Judy S. Hannah, PhD, Scientific Review Administrator, Review Branch, Division of Extramural Affairs, National Heart, Lung, and Blood Institute, National Institutes of Health, 6701 Rockledge Drive, Room 7190, Bethesda, MD 20892, 301/435–0287.

This notice is being published less than 15 days prior to the meeting due to the timing limitations imposed by the review and funding cycle.

(Catalogue of Federal Domestic Assistance Program Nos. 93.233, National Center for Sleep Disorders Research; 93.837, Heart and Vascular Diseases Research; 93.838, Lung Diseases Research; 93.839, Blood Diseases and Resources Research, National Institutes of Health, HHS)

Dated: December 8, 2004.

LaVerne Y. Stringfield,

Director, Office of Federal Advisory Committee Policy.

[FR Doc. 04–27410 Filed 12–14–04; 8:45 am]

BILLING CODE 4140–01–M

DEPARTMENT OF HEALTH AND HUMAN SERVICES

National Institutes of Health

National Institute of Diabetes and Digestive and Kidney Diseases; Notice of Closed Meetings

Pursuant to section 10(d) of the Federal Advisory Committee Act, as amended (5 U.S.C. Appendix 2), notice is hereby given of the following meetings.

The meeting will be closed to the public in accordance with the provisions set forth in sections 552b(c)(4) and 552b(c)(6), Title 5 U.S.C., as amended. The grant applications and the discussions could disclose confidential trade secrets or commercial property such as patentable material, and personal information concerning individuals associated with the grant applications, the disclosure of which would constitute a clearly unwarranted invasion of personal privacy.

Name of Committee: National Institute of Diabetes and Digestive and Kidney Diseases Special Emphasis Panel; ancillary Studies to Major Ongoing NIDDK Clinical Research Studies.

Date: January 13, 2005.

Time: 8 a.m. to 4 p.m.

Agenda: To review and evaluate grant applications.

Place: Marriott BWI Airport, 1742 West Nursery Road, Baltimore, MD 21240.

Contact Person: Dan E. Matsumoto, PhD, Scientific Review Administrator, Review Branch, DEA, NIDDK, Room 749, Office of Scientific Affairs, Room 749, 6707 Democracy Boulevard, National Institutes of Health, Bethesda, MD 20892–5452. (301) 594–8894. *matsumotod@extra,niddk.nih.gov.*

(Catalogue of Federal Domestic Assistance Program Nos. 93.847, Diabetes, Endocrinology and Metabolic Research; 93.848, Digestive Diseases and Nutrition Research; 93.849, Kidney Diseases, Urology and Hematology Research, National Institutes of Health, HHS)

Dated: December 8, 2004.

Laverne Y. Stringfield

Director, Office of Federal Advisory Committee Policy.

[FR Doc. 04–27409 Filed 12–14–04; 8:45 am]

BILLING CODE 4190–01–M

DEPARTMENT OF HEALTH AND HUMAN SERVICES

National Institutes of Health

National Institute of Nursing Research; Notice of Meeting

Pursuant to section 10(d) of the Federal Advisory Committee Act, as amended (5 U.S.C. Appendix 2), notice is hereby given of a meeting of the National Advisory Council for Nursing Research.

The meeting will be open to the public as indicated below, with attendance limited to space available. Individuals who plan to attend and need special assistance, such as sign language interpretation or other reasonable accommodations, should notify the Contact Person listed below in advance of the meeting.

The meeting will be closed to the public in accordance with the provisions set forth in sections 552b(c)(4) and 552b(c)(6), title 5 U.S.C., as amended. The grant applications and/or contract proposals and the discussions could disclose confidential trade secrets or commercial property such as patentable material, and personal information concerning individuals associated with the grant applications and/or contract proposals, the disclosure of which would constitute a clearly unwarranted invasion of personal privacy.

Name of Committee: National Advisory Council for Nursing Research.

Date: January 25–26, 2005.

Open: January 25, 2005, 1 to 5 p.m.

Agenda: For discussion of program issues and initiatives.

Place: National Institutes of Health, Building 31, 31 Center Drive, Bethesda, MD 20892.

Closed: January 26, 2005, 9 a.m. to adjournment.

Agenda: To review and evaluate grant applications and/or proposals.

Place: National Institutes of Health, Building 31, 31 Center Drive, Bethesda, MD 20892.

Contact Person: Claudette Varricchio, DSN, RN, Assistant Director, National Institute of Nursing Research, National Institutes of Health, 6701 Democracy Blvd., Room 710, Bethesda, MD 20892.

Any member of the public interested in presenting oral comments to the committee may notify the Contact Person listed on this notice at least 10 days in advance of the meeting. Interested individuals and representatives of organizations may submit a letter of intent, a brief description of the organization represented, and a short description of the oral presentation. Only one representative of an organization may be allowed to present oral comments and if accepted by the committee, presentations may be limited to five minutes. Both printed and electronic copies are requested for the record. In addition, any interested person may file written comments with the committee by forwarding their statement to the Contact Person listed on this notice. The statement should include the name, address, telephone number and when applicable, the business or professional affiliation of the interested person.

Information is also available on the Institute's/Center's home page: *www.nih.gov/ninr/a_advisory.html,* where an agenda and any additional information for the meeting will be posted when available.

(Catalogue of Federal Domestic Assistance Program Nos. 93.361, Nursing Research, National Institutes of Health, HHS.)

Dated: December 8, 2004.

LaVerne Y. Stringfield,

Director, Office of Federal Advisory Committee Policy.

[FR Doc. 04–27411 Filed 12–14–04; 8:45 am]

BILLING CODE 4140–01–M

DEPARTMENT OF HEALTH AND HUMAN SERVICES

National Institutes of Health

National Library of Medicine; Notice of Meetings

Pursuant to section 10(d) of the Federal Advisory Committee Act, as amended (5 U.S.C. Appendix 2), notice is hereby given of meetings of the Board of Regents of the National Library of Medicine.

The meetings will be open to the public as indicated below, with attendance limited to space available. Individuals who plan to attend and need special assistance, such as sign language interpretation or other reasonable accommodations, should notify the Contact Person listed below in advance of the meeting.

The meeting will be closed to the public in accordance with the

provisions set forth in sections 552b(c)(4) and 552b(c)(6), Title 5 U.S.C., as amended. The grant applications and the discussions could disclose confidential trade secrets or commercial property such as patentable material, and personal information concerning individuals associated with the grant applications, the disclosure of which would constitute a clearly unwarranted invasion of personal privacy.

Name of Committee: Board of Regents of the National Library of Medicine; Extramural Programs Subcommittee.

Date: February 14, 2005.

Closed: 4 p.m. to 6 p.m.

Agenda: To review and evaluate grant applications.

Place: National Library of Medicine, Building 38, CRB, 2nd Floor, 8600 Rockville Pike, Bethesda, MD 20892.

Contact Person: Donald A.B. Lindberg, MD, Director, National Library of Medicine, National Institutes of Health, PHS, DHHS, Bldg 38, Room 2E17B, Bethesda, MD 20894.

Name of Committee: Board of Regents of the National Library of Medicine; Subcommittee on Outreach and Public Information.

Date: February 15, 2005.

Closed: 7:30 a.m. to 8:45 a.m.

Agenda: Outreach Activities.

Place: National Library of Medicine, Building 38, CRB, 2nd Floor, 8600 Rockville Pike, Bethesda, MD 20892.

Contact Person: Donald A.B. Lindberg, MD, Director, National Library of Medicine, National Institutes of Health, PHS, DHHS, Bldg 38, Room 2E17B, Bethesda, MD 20894.

Name of Committee: Board of Regents of the National Library of Medicine.

Date: February 15–16, 2005.

Open: February 15, 2005, 9 a.m. to 4:30 p.m.

Agenda: Administrative Reports and Program Discussion.

Place: National Library of Medicine, Building 38, CRB, 2nd Floor, 8600 Rockville Pike, Bethesda, MD 20892.

Closed: February 15, 2005, 4:30 p.m. to 5 p.m.

Agend: To review and evaluate grant applications.

Place: National Library of Medicine, Building 38, CRB, 2nd Floor, 8600 Rockville Pike, Bethesda, MD 20892.

Open: February 16, 2005, 9 a.m. to 12 p.m.

Agenda: Administrative Reports and Program Discussion.

Place: National Library of Medicine, Building 38, CRB, 2nd Floor, 8600 Rockville Pike, Bethesda, MD 20892.

Contact Person: Donald A.B. Lindberg, MD, Director, National Library of Medicine, National Institutes of Health, PHS, DHHS, Bldg 38, Room 2E17B, Bethesda, MD 20894.

Name of Committee: Board of Regents of the National Library of Medicine; Planning Subcommittee.

Date: February 16, 2005.

Closed: 7:30 a.m. to 8:45 a.m.

Agenda: Long-Range Planning.

Place: National Library of Medicine, Building 38, CRB, 2nd Floor, 8600 Rockville Pike, Bethesda, MD 20892.

Contact Person: Donald A.B. Lindberg, MD, Director, National Library of Medicine, National Institutes of Health, PHS, DHHS, Bldg 38, Room 2E17B, Bethesda, MD 20894.

Any interest person may file written comments with the committee by forwarding the statement to the Contact Person listed on this notice. The statement should include the name, address, telephone number and when applicable, the business or professional affiliation of the interested person.

In the interest of security. NIH has instituted stringent procedures for entrance into the building by non-government employees. Persons without a government I.D. will need to show a photo I.D. and sign-in at the security desk upon entering the building.

Information is also available on the Institute's/Center's home page: *www.nln.nih.gov/od/bor/bor.html,* where an agenda and any additional information for the meeting will be posted when available.

(Catalogue of Federal Domestic Assistance Program Nos. 93.879, Medical Library Assistance, National Institutes of Health, HHS).

Dated: December 8, 2004.

LaVerne Y. Stringfield,

Director, Office of Federal Advisory Committee Policy.

[FR Doc. 04–27412 Filed 12–14–04; 8:45 am]

BILLING CODE 4140–01–M

DEPARTMENT OF HEALTH AND HUMAN SERVICES

National Institutes of Health

Center for Scientific Review; Notice of Closed Meetings

Pursuant to section 10(d) of the Federal Advisory Committee Act, as amended (5 U.S.C. Appendix 2), notice is hereby given of the following meetings.

The meetings will be closed to the public in accordance with the provisions set forth in sections 552b(c)(4) and 552b(c)(6), Title 5 U.S.C., as amended. The grant applications and the discussions could disclose confidential trade secrets or commercial property such as patentable material, and personal information concerning individuals associated with grant applications, the disclosure of which would constitute a clearly unwarranted invasion of personal privacy.

Name of Committee: Center for Scientific Review Special Emphasis Panel; E.coli Meningitis.

Date: December 13, 2004.

Time: 3:45 p.m. to 4:30 p.m.

Agenda: To review and evaluate grant applications.

Place: National Institutes of Health, 6701 Rockledge Drive, Bethesda, MD 20892 (Telephone Conference Call).

Contact Person: Timothy J. Henry, PhD, Scientific Review Administrator, Center for Scientific Review, National Institutes of Health, 6701 Rockledge Drive, Room 3212, MSC 7808, Bethesda, MD 20892, (301) 435–1147, *henry@csr.nih.gov.*

This notice is being published less than 15 days prior to the meeting due to the timing limitations imposed by the review and funding cycle .

Name of Committee: Center for Scientific Review Special Emphasis Panel; Novel Bacterial Protein Effects.

Date: December 14, 2004.

Time: 10:30 a.m. to 11:30 a.m.

Agenda: To review and evaluate grant applications.

Place: National Institutes of Health, 6701 Rockledge Drive, Bethesda, MD 20892, (Telephone Conference Call).

Contact Person: Timothy J. Henry, PhD, Scientific Review, National Institutes of Health, 6701 Rockledge Drive, Room 3212, MSC 7808, Bethesda, MD 20892, (301) 435–1147, *henry@csr.nih.gov.*

This notice is being published less than 15 days prior to the meeting due to the timing limitations imposed by the review and funding cycle.

Name of Committee: Center for Scientific Review Special Emphasis Panel; Molecular Parasitology.

Date: December 14, 2004.

Time: 4 p.m. to 5 p.m.

Agenda: To review and evaluate grant applications.

Place: National Institutes of Health, 6701 Rockledge Drive, Bethesda, MD 20892, (Telephone Conference Call).

Contact Person: Alexander D. Politis, PhD, Scientific Review Administrator, Center for Scientific Review, National Institutes of Health, 6701 Rockledge Drive, Room 3210, MSC 7808, Bethesda, MD 20892, (301) 435–1150, *politisa@csr.nih.gov.*

This notice is being published less than 15 days prior to the meeting due to the timing limitations imposed by the review and funding cycle.

Name of Committee: Center for Scientific Review Special Emphasis Panel; Human Brain Project II.

Date: December 14, 2004.

Time: 12 p.m. to 2 p.m.

Agenda: To review and evaluate grant applications.

Place: National Institutes of Health, 6701 Rockledge Drive, Bethesda, MD 20892, (Telephone Conference Call).

Contact Person: Peter B. Guthrie, PhD, Scientific Review Administrator, Center for Scientific Review, National Institute of Health, 6701 Rockledge Drive, Room 4142, MSC 7850, Bethesda, MD 20892. (301) 435–1239, *guthriep@csr.nih.gov.*

This notice is being published less than 15 days prior to the meeting due to the timing limitations imposed by the review and funding cycle.

Name of Committee: Center for Scientific Review Special Emphasis Panel; Insect Vector Control.

Date: December 16, 2004.

Time: 2 p.m. to 3 p.m.

Agenda: To review and evaluate grant applications.

Place: National Institutes of Health, 6701 Rockledge Drive, Bethesda, MD 20892 (Telephone Conference Call).

Contact Person: John C. Pugh, PhD, Scientific Review Administrator, Center for Scientific Review, National Institutes of Health, 6701 Rockledge Drive, Room 3114, MSC 7808, Bethesda, MD 20892, (301) 435–2398, *pughjohn@csr.nih.gov.*

This notice is being published less than 15 days prior to the meeting due to the timing limitations imposed by the review and funding cycle.

(Catalogue of Federal Domestic Assistance Program Nos. 93.306, Comparative Medicine; 93.333, Clinical Research, 93.306, 93.333, 93.337, 93.393–93.396, 93.837–93.844, 93.846–93.878, 93.892, 93.893, National Institutes of Health, HHS)

Dated: December 8, 2004.

Laverne Y. Stringfield,

Director, Office of Federal Advisory Committee Policy.

[FR Doc. 04–27408 Filed 12–14–04; 8:45 am]

BILLING CODE 4140–01–M

DEPARTMENT OF HOMELAND SECURITY

Bureau of Citizenship and Immigration Services

Agency Information Collection Activities: Comment Request

ACTION: Notice of 60-Day Information Collection Under Review, OMB Emergency Approval Requested: H–1B Data Collection and Filing Fee Exemption, Form No. I–129W.

The Department of Homeland Security, U.S. Citizenship and Immigration Services (USCIS) has submitted an emergency information collection request (ICR) utilizing emergency review procedures to the Office of Management and Budget (OMB) for review and clearance in accordance with section 1320.13(a)(1)(ii) and (a)(2)(iii) of the Paperwork Reduction Act of 1995. USCIS has determined that it cannot comply with the normal clearance procedures under this part because the normal clearance procedures are likely to prevent or disrupt the collection of information. USCIS is requesting emergency review from OMB of this information collection to ensure compliance with the H–1B Visa Reform Act of 2004. Section 22 of the H–1B Visa Reform Act amends section 214(c)(9) of the Immigration and Nationality Act (INA), and states that the Secretary of the Department of Homeland Security shall impose a fee on an employer filing an H–1B petition on or after December 9, 2004, to initially grant an alien H–1B nonimmigrant classification to extend the stay of an H–1B nonimmigrant for the first time, or to request a change in employers for H–1B nonimmigrant status. Institutions of higher education, or related or affiliated nonprofit entities, and nonprofit or governmental research organizations are exempt from paying the additional fee. Accordingly, USCIS is revising the Form I–129W to reflect the new requirements of the H–1B Visa Reform Act of 2004.

Emergency review and approval of this ICR ensures that the collection instrument is in place by the effective date of the legislation.

If granted, the emergency approval is only valid for 180 days. All comments and/or questions pertaining to this request for emergency approval must be directed to OMB, Office of Information and Regulatory Affairs, 725 17th Street, NW., Suite 10235, Washington, DC 20503; Attention: Desk Officer; 202–395–4718.

During the first 60 days of this period, a regular review of this information collection will also be undertaken. During the regular review period, the USCIS requests and encourages written comments and suggestions from the public and affected agencies concerning this information collection; comments will be accepted until February 14, 2005. During the 60-day regular review, all comments and suggestions, or questions should be directed to Mr. Richard Sloan, Director, Regulatory Management Division, U.S. Citizenship and Immigration Services, 111 Massachusetts Avenue, NW., Washington, DC 20529; 202–616–7598.

Written comments and suggestions from the public and affected agencies concerning the collection of information should address one or more of the following four points:

(1) Evaluate whether the proposed collection of information is necessary for the proper performance of the functions of the agency, including whether the information will have practical utility;

(2) Evaluate the accuracy of the agencies estimate of the burden of the proposed collection of information, including the validity of the methodology and assumptions used;

(3) Enhance the quality, utility, and clarity of the information to be collected; and

(4) Minimize the burden of the collection of information on those who are to respond, including through the use of appropriate automated, electronic, mechanical, or other technological collection techniques or other forms of information technology, *e.g.,* permitting electronic Overview of this information collection:

(1) *Type of information collection: Revised information collection.*

(2) *Title of the form/collection:* H–1B Data Collection and Filing Fee Exemption.

(3) *Agency form number, if any, the applicable component of the Department of Homeland Security sponsoring the collection:* Form I–129W. Office of Policy and Strategy, U.S. Citizenship and Immigration Services.

(4) *Affected public who will be asked or required to respond, as well as a brief abstract:* Primary: Business or other for-profit. This addendum to the Form I–129 will be used by USCIS to impose a fee on an employer filing an H–1B petition.

(5) *An estimate of the total number of respondents and the amount of time estimated for an average respondent to respond:* 148,092 responses at 30 minutes (.50 hours) per response.

(6) *An estimate of the total public burden (in hours) associated with the collection:* 74,046 annual burden hours.

Dated: December 9, 2004.

Richard A. Sloan,

Director, Regulatory Management Division, U.S. Citizenship and Immigration Services, Department of Homeland Security.

[FR Doc. 04–27393 Filed12–14–04; 8:45 am]

BILLING CODE 4410–10–M

DEPARTMENT OF HOMELAND SECURITY

Bureau of Customs and Border Protection

[CBP Decision 04–41]

CBP Decisions; Application for Recordation of Trade Name: ''Precision Instrument Manifolds''

ACTION: Notice of application for recordation of trade name.

SUMMARY: Application has been filed pursuant to § 133.12, Customs Regulations (19 CFR 133.12), for recordation under section 42 of the Act of July 5, 1946, as amended (15 U.S.C. 1124), of the trade name ''PRECISION INSTRUMENT MANIFOLDS,'' used by DYNAMIC Controls & Sensors, Inc., a corporation organized under the laws of the State of Texas, located at P.O. Box 5009 Kingwood, Texas 77325.

The application states that the trade name is used in connection with valves.

Before final action is taken on the application, consideration will be given to any relevant data, views, or

arguments submitted in writing by any person in opposition to the recordation of this trade name. Notice of the action taken on the application for recordation of this trade name will be published in the **Federal Register**.

DATES: Comments must be received on or before February 14, 2005.

ADDRESSES: Written comments should be addressed to U.S. Customs and Border Protections, Attention: Office of Regulations and Rulings, Intellectual Property Rights Branch, 1301 Constitution Avenue, NW., (Mint Annex), Washington, DC 20229.

FOR FURTHER INFORMATION CONTACT: Delois P. Johnson, Paralegal, Intellectual Property Rights Branch, at (202) 572–8703.

Dated: December 9, 2004.

George Frederick McCray,

Chief, Intellectual Property Rights Branch.

[FR Doc. 04–27419 Filed 12–14–04; 8:45 am]

BILLING CODE 4820–02–P

DEPARTMENT OF HOMELAND SECURITY

Federal Emergency Management Agency

[DHS–2004–0019]

RIN 1660–ZA07

National Emergency Management Information System—Mitigation Electronic Grants Management System; Privacy Act System of Record

AGENCY: Federal Emergency Management Agency, Emergency Preparedness and Response Directorate, Department of Homeland Security.

ACTION: Notice of a new system of records.

SUMMARY: Pursuant to the requirements of the Privacy Act of 1974, as amended, the Department of Homeland Security, Emergency Preparedness and Response Directorate, Federal Emergency Management Agency is establishing a new system of records entitled National Emergency Management Information System—Mitigation Electronic Grants Management System. Some (but not all) applications for mitigation grants propose activities that impact properties that are privately owned by individuals (*e.g.*, acquisition of a home that has been repeatedly flooded) and these applications include personally identifiable information about the property owners. Potentially, this personally identifying information may be part of a State's application, and also part of a local community's application as a sub-applicant. Personal information collected in these applications includes the minimum amount necessary to ascertain the eligibility of that property and/or structure (*e.g.*, house or commercial building) under mitigation grant program regulations. *See https://portal.fema.gov/famsVu/dynamic/mitigation.html.*

EFFECTIVE DATE: The addition of a new system of records and routine uses will become effective on January 24, 2005, unless comments are received that result in a contrary determination.

ADDRESSES: You may submit comments, identified by EPA Docket Number: DHS–2004–0019 and/or 1660–ZA07 by *one* of the following methods:

- EPA Federal Partner EDOCKET Web Site: *http://www.epa.gov/feddocket.* Follow instructions for submitting comments on the Web site. DHS has joined the Environmental Protection Electronic Docket System (Partner EDOCKET). DHS and its agencies (excluding the United States Coast Guard (USCG) and Transportation Security Administration (TSA)) will use the EPA Federal Partner EDOCKET system. The USCG and TSA [legacy Department of Transportation (DOT) agencies] will continue to use the DOT Docket Management System until full migration to the electronic rulemaking federal docket management system occurs in 2005.
- *Federal e-Rulemaking Portal: http://www.regulations.gov.* Follow the instructions for submitting comments.
- *Fax:* (202) 646–4536.
- *Mail:* Rules Docket Clerk, Federal Emergency Management Agency, Office of General Counsel, Room 840, 500 C Street SW., Washington, DC 20472.

FOR FURTHER INFORMATION CONTACT: Rena Y. Kim, Privacy Act Officer, Federal Emergency Management Agency, Room 840, 500 C Street SW., Washington, DC 20472, (202) 646–3949, (not a toll free call), (telefax) (202) 646–3949, or email *Rena.Kim@dhs.gov.*

SUPPLEMENTARY INFORMATION: The Privacy Act embodies fair information principles in a statutory framework governing the means by which the United States Government collects, maintains, uses, and disseminates personally identifiable information. 5 U.S.C. 552a. The Privacy Act applies to information that is maintained in a ''system of records.'' A ''system of records'' is a group of any records under the control of an agency from which information is retrieved by the name of the individual or by some identifying number, symbol, or other identifying particular assigned to the individual. Individuals may request their own records that are maintained in a system of records in the possession or under the control of Department of Homeland Security (DHS) by complying with DHS Privacy Act regulations, 6 CFR part 5, subpart B and Federal Emergency Management Agency's (FEMA) Privacy Act regulations, 44 CFR part 6.

The Privacy Act requires each agency to publish in the **Federal Register** a description denoting the type and character of each system of records that the agency maintains, and the routine uses that are contained in each system in order to make agency recordkeeping practices transparent, to notify individuals regarding the uses to which personally identifiable information is put, and to assist the individual to more easily find such files within the Agency.

The Emergency Preparedness and Response Directorate/FEMA is establishing a new system of records pursuant to the Privacy Act of 1974 for the National Emergency Management Information System—Mitigation Electronic Grants Management System (NEMIS–MT eGrants). FEMA intends to collect personal information in applications for its mitigation grant programs through the NEMIS–MT eGrants via the Internet. The FEMA mitigation grant programs are the Flood Mitigation Assistance (FMA) grant program (42 U.S.C. 4104c) and the Pre-Disaster Mitigation (PDM) grant program, (42 U.S.C. 5133). The purpose of FEMA mitigation grant programs is to provide funds to eligible Applicants/States to implement mitigation activities to reduce or eliminate the risk of future damage to life and property from disasters.

Eligible applicants for FEMA mitigation grants are State emergency management agencies or a similar State office that has emergency management responsibility, the District of Columbia, the United States Virgin Islands, the Commonwealth of Puerto Rico, Guam, American Samoa, and the Commonwealth of the Northern Mariana Islands, and Federally recognized Indian Tribal governments. Eligible Sub-applicants of FEMA mitigation grants are State agencies, local governments, or Indian Tribal governments to which a sub-grant is awarded. Examples of mitigation activities that impact privately owned properties (and which may include personally identifiable information in a State or local community application) include retrofitting structures, elevation of structures, acquisition and demolition or relocation of structures, minor structural flood control projects, or construction of safe rooms. The personally identifying information

collected includes an individual's name, home phone number, office phone number, cell phone number, damaged property address, and mailing address of the individual property owner(s), and the individual's status regarding flood insurance, National Flood Insurance Program (NFIP) Policy Number and Insurance Policy Provider for the property proposed to be mitigated with FEMA funds. This notice will make the public aware of routine management and oversight information sharing between FEMA and other Federal agencies, State and local governments, and contractors providing services in support of FEMA mitigation grant programs.

Accordingly, the NEMIS–MT eGrants Privacy Act system of records is added to read as follows:

SYSTEM NAME:

National Emergency Management Information System—Mitigation Electronic Grants Management System (NEMIS–MT eGrants).

SYSTEM LOCATION:

All servers are operated at FEMA, Mount Weather Emergency Operations Center (MWEOC), 19844 Blue Ridge Mountain Road, Bluemont, VA 20135.

CATEGORIES OF INDIVIDUALS COVERED BY THE SYSTEM:

This system of records notice applies only to individuals identified by name or other individual identifier, such as home address, in the NEMIS–MT eGrants, and includes individuals who are private property owners. These individuals voluntarily request that their State, Territory or local community submit an application for FEMA mitigation grant funds for the purpose of mitigating their property and/or structure (*e.g.*, house or commercial building).

CATEGORIES OF RECORDS IN THE SYSTEM:

The categories of records in the system are grant applications. The personally identifying information collected includes an individual's name, home phone number, office phone number, cell phone number, damaged property address, and mailing address of the individual property owner(s), and the individual's status regarding flood insurance, National Flood Insurance Program (NFIP) Policy Number and Insurance Policy Provider for the property proposed to be mitigated with FEMA funds.

AUTHORITY FOR MAINTENANCE OF THE SYSTEM:

The Robert T. Stafford Disaster Relief and Emergency Assistance Act, 42 U.S.C. 5133, and the National Flood Insurance Act, 42 U.S.C. 4104c.

PURPOSE(S):

The purpose of this system of records is to collect and maintain individually identifiable information in applications for FEMA mitigation grants that are submitted electronically, via the Internet, through the NEMIS–MT eGrants from eligible Applicants/States and Sub-applicants/local communities. The personally identifiable information will be collected and maintained in order for FEMA to ascertain eligibility of the property or structure for FEMA's mitigation grant programs, to verify eligibility of activities for mitigation grants, to identify repetitive loss properties, and to implement measures to reduce future disaster damage.

ROUTINE USES OF RECORDS MAINTAINED IN THE SYSTEM, INCLUDING CATEGORIES OF USERS AND THE PURPOSES OF SUCH USES:

In addition to those disclosures generally permitted under 5 U.S.C. 552a(b), all or a portion of the records or information contained in this system may be disclosed outside FEMA/EP&R/DHS as a routine use pursuant to 5 U.S.C. 552a(b)(3) as follows:

(1) To another Federal agency, State, United States Territory or Tribal government agency charged with administering Federal mitigation or disaster relief programs to prevent a duplication of efforts or a duplication of benefits between FEMA and the other agency. FEMA may disclose information to a State, U.S. Territory, Indian Tribal, or local community agency eligible to apply for mitigation grant programs administered by FEMA.

(2) To contractors, grantees, experts, consultants, students and others performing or working on a contract, service, grant, cooperative agreement, or other assignment for the Federal government, when necessary to accomplish an agency function related to this system of records.

(3) To an agency, organization, or individual for the purposes of performing authorized audit or oversight operations.

(4) To a congressional office from the record of an individual in response to an inquiry from that congressional office made at the request of the individual to whom the record pertains.

(5) Where a record, either on its face or in conjunction with other information, indicates a violation or potential violation of law—criminal, civil, or regulatory—the relevant records may be referred to an appropriate Federal, state, territorial, tribal, local, international, or foreign agency law enforcement authority or other appropriate agency charged with investigating or prosecuting such a violation or enforcing or implementing such law.

(6) To the Department of Justice (DOJ) or other federal agency conducting litigation or in proceedings before any court, adjudicative or administrative body, when: (a) DHS, or (b) any employee of DHS in his/her official capacity, or (c) any employee of DHS in his/her individual capacity where DOJ or DHS has agreed to represent the employee, or

(d) the United States or any agency thereof, is a party to the litigation or has an interest in such litigation.

(7) To the NARA or other Federal Government agencies pursuant to records management inspections being conducted under the authority of 44 U.S.C. sections 2904 and 2906.

POLICIES AND PRACTICES FOR STORING, RETRIEVING, ACCESSING, RETAINING, AND DISPOSING OF RECORDS IN THE SYSTEM:

STORAGE:

All information is stored on secure-access servers operated at a single site at the FEMA, MWEOC, 19844 Blue Ridge Mountain Road, Bluemont, VA 20135. Backup is provided on a separate server at the same secure facility. MWEOC is only accessible by authorized persons, including FEMA employees and contractors, and entry to the facility is permitted only with a badge issued by the MWEOC.

SAFEGUARDS:

Safeguards exist in the NEMIS–MT eGrants to prevent the unauthorized access or misuse of data. First, FEMA maintains security safeguards that prevent unauthorized access to the system by assigning each authorized user a unique user profile, username and password based upon his/her official use of the NEMIS–MT eGrants. Each unique profile includes different levels of access rights. For Applicants/States and Sub-applicants/local communities, roles in the system via the Internet are assigned as Read-Only, Create/Edit, or Sign/Submit, and levels of access are assigned by mitigation grant program (i.e., FMA and/or PDM). For FEMA employees and contractors, levels of access via the FEMA Intranet are assigned by mitigation grant program (i.e., FMA and/or PDM) and by Region(s), and roles for FEMA users do not allow FEMA users View information submitted in applications. Passwords expire after a limited time, and users only have access to the system during the period of time that both the assigned username and password are active.

Access to NEMIS–MT eGrants via the Intranet is assigned to the FEMA employees and contractors for official purposes only through the NEMIS Access Control System (NACS), which controls access to all software available on the FEMA Intranet, and manages roles for FEMA officials accessing the system. Access to NEMIS–MT eGrants via the Internet is assigned to the Applicants/States and Sub-applicants/local communities for official purposes only through the FEMA Access Management System, which performs a similar function to NACS, but for eligible mitigation grant program Applicants/States and Sub-applicants/local communities, and managed roles for these non-FEMA users. The functions of these two databases will be combined into the Integrated Security and Access Control System. While the system is accessed, if an active NEMIS–MT eGrants browser window is left open with no actions taken within the system, the displayed page will expire after 30 minutes. The user can then re-login using the username and password to access the system. In addition, the system will not allow a user to bookmark the URL of the MT eGrants with the intent of returning to that page at another time without first entering the authorized username and password. Finally, FEMA Enterprise Operations and the Office of Cyber Security are able to monitor system use and determine whether information integrity has been compromised by unauthorized access or use, and whether corrective action by the Office of the Chief Information Officer is necessary. Procedures are compliant with Title III of the E–Government Act of 2000 (Federal Information Security Management Act).

RETENTION AND DISPOSAL:

In accordance with U.S. National Archives & Records Administration records retention regulations (GRS 3, 13), records are retained for 6 years and 3 months. Unsuccessful grant application files will be stored in NEMIS–MT eGrants for 3 years from the date of denial, and then deleted. Successful grant application files will be stored in the NEMIS–MT eGrants for 6 years and 3 months from the date of closeout (where closeout is the date FEMA closes the grant in its financial system) and then deleted. Computerized records are stored in a database server in a secured file server room. Hard copy records are maintained for 6 years and 3 months years, at which time they are retired to the Federal Records Center. The same retention schedule that applies to paper records will be followed. This is consistent with the records retention schedule that has been developed for this system.

SYSTEM MANAGER(S) AND ADDRESS:

Patricia Bowman, Program Manager, IT–SE–CS, 500 C Street SW., Washington DC 20472, *Pat.Bowman@dhs.gov,* (202) 646–2661.

NOTIFICATION PROCEDURES:

Address inquiries to the System Manager named above.

RECORD ACCESS PROCEDURES:

A request for access to records in this system may be made by writing to the System Manager, identified above, in conformance with 6 CFR part 5, subpart B, which provides the rules for requesting access to Privacy Act records maintained by DHS and FEMA's Privacy Act regulations at 44 CFR part 6.

CONTESTING RECORD PROCEDURES:

Same as Notification procedures above. A request for access to records in this system may be made by writing to the System Manager, identified above, in conformance with 6 CFR part 5, subpart B, which provides the rules for requesting access to Privacy Act records maintained by DHS and FEMA's Privacy Act regulations at 44 CFR part 6.

RECORDS SOURCE CATEGORIES:

Information in this system of records is obtained from State/Territory, local government, or Indian Tribal governmentvia the Internet to FEMA. While individuals are *not* eligible Applicants/States or Sub-applicants/local communities, and cannot apply directly to FEMA for assistance, some (but not all) applications for FEMA mitigation grants propose activities that impact properties that are privately owned by individuals (e.g., acquisition of a home that has been repeatedly flooded) and these applications include personal information about the property owners. These individuals voluntarily request that their State, Territory, or local community submit an application for FEMA mitigation grant funds for the purpose of mitigating their property and/or structure (e.g., house or commercial building).

EXEMPTIONS CLAIMED FOR THE SYSTEM:

None.

Dated: December 10, 2004.

David A. Trissell,

Associate General Counsel, Emergency Preparedness and Response, Department of Homeland Security.

[FR Doc. 04–27462 Filed 12–14–04; 8:45 am]

BILLING CODE 9110–41–P

DEPARTMENT OF HOUSING AND URBAN DEVELOPMENT

[Docket No. FR–4909–N–11]

Notice of Proposed Information Collection for Public Comment: Notice of Funding Availability for the Urban Scholar Fellowship Program

AGENCY: Office of the Assistant Secretary for Policy Development and Research, HUD.

ACTION: Notice.

SUMMARY: The proposed information collection requirement described below will be submitted to the Office of Management and Budget (OMB) for review, as required by the Paperwork Reduction Act. The Department is soliciting public comments on the subject proposal.

DATES: *Comments Due Date*: February 14, 2005.

ADDRESSES: Interested persons are invited to submit comments regarding this proposal. Comments should refer to the proposal by name and/or OMB Control Number and should be sent to: Reports Liaison Officer, Officer of Policy Development and Research, Department of Housing and Urban Development, 451 7th Street, SW., Room 8226, Washington, DC 20410–6000.

FOR FURTHER INFORMATION CONTACT: Susan Brunson, (202) 708–3061, ext. 3852 (this is not a toll-free number), for copies of the proposed forms and other available documents.

SUPPLEMENTARY INFORMATION: The Department of Housing and Urban Development will submit the proposed information collection to OMB for review, as required by the Paperwork Reduction Act of 1995 (44 U.S.C. Chapter 35, as amended).

This Notice is soliciting comments from members of the public and affected agencies concerning the proposed collection of information to: (1) Evaluate whether the proposed collection of information is necessary for the proper performance of the functions of the agency, including whether the information will have practical utility; (2) Evaluate the accuracy of the agency's estimate of the burden of the proposed collection of information; (3) Enhance the quality, utility, and clarity of the information to be collected; and (4) Minimize the burden of the collection of information on those who are to respond, including through the use of appropriate automated collection techniques or other forms of information technology (*e.g.,* permitting electronic submission of responses).

This Notice also lists the following information:

Title of Proposal: Notice of Funding Availability for the Urban Scholar Fellowship Program.

OMB Control Number: 2528–0214 (Exp. 11/30/04).

Description of the Need for the Information and Proposed Use: The information is being collected to select applicants for award in this statutorily created competitive grant and to monitor performance of grantees to ensure they meet statutory and program goals and requirements.

Agency Form Numbers: SF–424, HUD 424B, SF–424, SFLLL, HUD–27061, HUD 2880, HUD–2730, HUD–96010, HUD–2993, and HUD 2994.

Members of the Affected Public: Urban Scholars.

Estimation of the total number of hours needed to prepare the information collection including number of respondents, frequency of response, and hours of response: Information pursuant to grant award will be submitted once a year. The following chart details the respondent burden on a quarterly, semi-annual and annual basis:

	Number of respondents	Total annual responses	Hours per response	Total hours
Applicants	100	100	32	3,200
Eight-month Reports	10	10	8	80
Final Reports	10	10	4	40
Total	120	120	44	3,320

Status of the proposed information collection: Pending OMB approval.

Authority: Section 3506 of the Paperwork Reduction Act of 1995, 44 U.S.C. Chapter 35, as amended.

Dated: December 4, 2004.

Dennis C. Shea,

Assistant Secretary for Policy Development and Research.

[FR Doc. 04–27402 Filed 12–14–04; 8:45 am]

BILLING CODE 4210–62–M

DEPARTMENT OF HOUSING AND URBAN DEVELOPMENT

[Docket No. FR–4903–N–100]

Notice of Submission of Proposed Information Collection to OMB; Preauthorized Debit (PAD) Request

AGENCY: Office of the Chief Information Officer, HUD.

ACTION: Notice.

SUMMARY: The proposed information collection requirement described below has been submitted to the Office of Management and Budget (OMB) for review, as required by the Paperwork Reduction Act. The Department is soliciting public comments on the subject proposal.

HUD is requesting approval to continue to collect the information necessary to apply for a direct electronic transfer of payments from a financial institution to HUD when debtors have established a repayment plan and desire an automated transfer of funds.

DATES: *Comments Due Date:* January 14, 2005.

ADDRESSES: Interested persons are invited to submit comments regarding this proposal. Comments should refer to the proposal by name and/or OMB approval Number (2502–0424) and should be sent to: HUD Desk Officer, Office of Management and Budget, New Executive Office Building, Washington, DC 20503; fax: (202) 395–6974.

FOR FURTHER INFORMATION CONTACT: Wayne Eddins, Reports Management Officer, AYO, Department of Housing and Urban Development, 451 Seventh Street, SW., Washington, DC 20410; e-mail *Wayne_Eddins@HUD.gov*; or Lillian Deitzer at *Lillian_L_Deitzer@HUD.gov* or telephone (202) 708–2374. This is not a toll-free number. Copies of available documents submitted to OMB may be obtained from Mr. Eddins or Ms. Deitzer and at HUD's Web site at *http://www.hud.gov:63001/po/i/icbts/collectionsearch.cfm*.

SUPPLEMENTARY INFORMATION: This notice informs the public that the Department of Housing and Urban Development has submitted to OMB a request for approval of the information collection described below. This notice is soliciting comments from members of the public and affecting agencies concerning the proposed collection of information to: (1) Evaluate whether the proposed collection of information is necessary for the proper performance of the functions of the agency, including whether the information will have practical utility; (2) Evaluate the accuracy of the agency's estimate of the burden of the proposed collection of information; (3) Enhance the quality, utility, and clarity of the information to be collected; and (4) Minimize the burden of the collection of information on those who are to respond; including through the use of appropriate automated collection techniques or other forms of information technology, e.g., permitting electronic submission of responses.

This notice also lists the following information:

Title of Proposal: Preauthorized Debit (PAD) Request.

OMB Approval Number: 2502–0424.

Form Numbers: 92090.

Description of the Need for the Information and Its Proposed Use: The information is used to establish a direct electronic transfer of payments from a financial institution to HUD when debtors have established a repayment plan and desire an automated transfer of funds.

Frequency of Submission: On Occasion.

	Number of respondents	Annual responses	×	Hours per response	=	Burden hours
Reporting burden	42	42		0.25		10.5

Total Estimated Burden Hours: 10.5.

Status: Extension of a currently approved collection.

Authority: Section 3507 of the Paperwork Reduction Act of 1995, 44 U.S.C. 35, as amended.

Dated: December 8, 2004.

Wayne Eddins,

Departmental Reports Management Officer, Office of the Chief Information Officer.

[FR Doc. 04–27414 Filed 12–14–04; 8:45 am]

BILLING CODE 4210–72–M

DEPARTMENT OF HOUSING AND URBAN DEVELOPMENT

[Docket No. FR–4903–N–99]

Notice of Submission of Proposed Information Collection to OMB; HUD's Affordable Communities Award

AGENCY: Office of the Chief Information Officer, HUD.

ACTION: Notice.

SUMMARY: The proposed information collection requirement described below has been submitted to the Office of Management and Budget (OMB) for review, as required by the Paperwork Reduction Act. The Department is soliciting public comments on the subject proposal.

HUD is requesting approval to continue to collect the information necessary to apply for HUD's Affordable Communities Award. The award is a non-monetary award to be presented annually to acknowledge and honor those communities at the forefront in expanding affordable housing opportunities by reducing regulatory barriers and creating an environment supportive of the construction and rehabilitation of affordable housing. This award was designed and developed as part of HUD's Affordable Communities Initiative.

DATES: *Comments Due Date:* January 14, 2004.

ADDRESSES: Interested persons are invited to submit comments regarding this proposal. Comments should refer to the proposal by name and/or OMB approval Number (2501–0020) and should be sent to: HUD Desk Officer, Office of Management and Budget, New Executive Office Building, Washington, DC 20503; fax: 202–395–6974.

FOR FURTHER INFORMATION CONTACT: Wayne Eddins, Reports Management Officer, AYO, Department of Housing and Urban Development, 451 Seventh Street, SW., Washington, DC 20410; e-mail *Wayne_Eddins@HUD.gov;* or Lillian Deitzer at *Lillian_L_Deitzer@HUD.gov* or telephone (202) 708–2374. This is not a toll-free number. Copies of available documents submitted to OMB may be obtained from Mr. Eddins or Ms. Deitzer and at HUD's Web site at *http://www5.hud.gov:63001/po/i/icbts/collectionsearch.cfm.*

SUPPLEMENTARY INFORMATION: This notice informs the public that the Department of Housing and Urban Development has submitted to OMB a request for approval of the information collection described below. This notice is soliciting comments from members of the public and affecting agencies concerning the proposed collection of information to: (1) Evaluate whether the proposed collection of information is necessary for the proper performance of the functions of the agency, including whether the information will have practical utility; (2) evaluate the accuracy of the agency's estimate of the burden of the proposed collection of information; (3) enhance the quality, utility, and clarity of the information to be collected; and (4) minimize the burden of the collection of information on those who are to respond; including through the use of appropriate automated collection techniques or other forms of information technology, *e.g.,* permitting electronic submission of responses.

This notice also lists the following information:

Title Of Proposal: HUD's Affordable Communities Award.

OMB Approval Number: 2501–0020.

Form Numbers: None.

Description Of The Need For The Information And Its Proposed Use: Application for HUD's Affordable Communities Award, a non-monetary award to be presented annually, acknowledging and honoring those communities at the forefront in expanding affordable housing opportunities by reducing regulatory barriers and creating an environment supportive of the construction and rehabilitation of affordable housing. This award was designed and developed as part of HUD's Affordable Communities Initiative.

Frequency Of Submission: Annually.

	Number of respondents	Annual responses	×	Hours per response	=	Burden hours
Reporting burden	300	300		8		2,400

Total Estimated Burden Hours: 2,400.

Status: Extension of a currently approved collection.

Authority: Section 3507 of the Paperwork Reduction Act of 1995, 44 U.S.C. 35, as amended.

Dated: December 8, 2004.

Wayne Eddins,

Departmental Reports Management Officer, Office of the Chief Information Officer.

[FR Doc. E4–3647 Filed 12–14–04; 8:45 am]

BILLING CODE 4210–72–P

DEPARTMENT OF HOUSING AND URBAN DEVELOPMENT

[Docket No. FR–4900–FA–02]

Announcement of Funding Awards for Fiscal Year 2004; Doctoral Dissertation Research Grant Program

AGENCY: Office of the Assistant Secretary for Policy Development and Research, HUD.

ACTION: Announcement of funding awards.

SUMMARY: This document identifies the doctoral students selected for funding under the Fiscal Year (FY) 2004 Doctoral Dissertation Research Grant (DDRG) Program. The DDRG program enables Ph.D. candidates to complete their research and dissertations on topics that focus on policy-relevant housing and urban development issues.

FOR FURTHER INFORMATION CONTACT: Susan Brunson, Office of University Partnerships, U.S. Department of Housing and Urban Development, Room 8106, 451 Seventh Street, SW., Washington, DC 20410, telephone (202) 708–3061, ext. 3852. To provide service for persons who are hearing- or speech-impaired, this number may be reached through TTY by dialing the Federal Information Relay Service on 800–877–8339 or (202) 708–1455. (Telephone numbers, other than ''800'' TTY numbers are not toll free).

SUPPLEMENTARY INFORMATION: The DDRG Program was created as a means of

expanding the number of researchers conducting research on subjects of interest to HUD. Doctoral candidates can receive grants of up to $25,000 to complete work on their dissertations. Grants are for a two-year period.

This program is administered by the Assistant Secretary for Policy Development and Research (PD&R), Office of University Partnerships. This Office also administers PD&R's other grant programs for academics.

The Catalog of Federal Domestic Assistance number for this program is 14.516.

On May 14, 2004, HUD published a Notice of Funding Availability (NOFA) announcing the availability of $400,000 in Fiscal Year 2004 for the DDRG Program (69 FR 27111). The Department reviewed, evaluated and scored the applications received based on the criteria in the NOFA. As a result, HUD has funded the applicants identified below, and in accordance with Section 102(a)(4)(C) of the Department of Housing and Urban Development Reform Act of 1989 (103 Stat. 1987, U.S.C. 3545), the Department is publishing details concerning the recipients of funding awards. More information about the winners can be found at *http://www.oup.org.*

List of Awardees for Grant Assistance Under the FY 2004 Doctoral Dissertation Research Grant Program Funding Competition, by Institution, Address, Grant Amount and Name of Student Funded

1. University of Southern California, University Park Campus, RGL Building, Los Angeles, CA 90089. Grant: $25,000 to Duan Zhuang.
2. Virginia Polytechnic Institute and State University, 460 Turner Street, Suite 306, Blacksburg, VA 24060. Grant: $24,976 to James Armstrong.
3. The Regents of the University of California, 10920 Wilshire Boulevard, Suite 1200, Los Angeles, CA 90024. Grant: $24,988 to Yan Lee.
4. Massachusetts Institute of Technology, 77 Massachusetts Avenue, Room 9–523, Cambridge, MA 02139. Grant: $25,000 to Criseida Navarro-Diaz.
5. University of Texas at Austin, North Office Building–Suite 4300, 101 East 27th Street, Austin, TX 78713. Grant: $25,000 to Pamela Rogers.
6. Rutgers, The State University of New Jersey, 3 Rutgers Plaza, New Brunswick, NJ 08901. Grant: $25,000 to Kristen Crassney.
7. Rutgers, The State University of New Jersey, 3 Rutgers Plaza, New Brunswick, NJ 08901. Grant: $23,480 to Mathew Cuddy.
8. Regents of the University of Michigan, 303 South State Street, Room 1044, Ann Arbor, MI 48109–1274. Grant: $25,000 to George Carter.
9. University of North Carolina at Chapel Hill, Office of Sponsored Research, CB#1350, Chapel Hill, NC 27599. Grant: $24,992 to Lisa Bates.
10. The Board of Trustees of the University of Illinois, 809 South Marshfield (M/C 551), Chicago, IL 60612. Grant: $25,000 to Michael Wenz.
11. Regents University of Michigan, 427 Thompson Street, P.O. Box 1248, Ann Arbor, MI 48106. Grant: $25,000 to Sapna Swaroop.
12. University of Massachusetts, Office of Grant & Contract Administration, Goodell Building, Room 408, Amherst, MA 01003. Grant: $25,000 to Mark Tigan.
13. University of Pittsburgh, 350 Thackeray Hall, Pittsburgh, PA 15260. Grant: $24,800 to Andrew Aurand.
14. Research Foundation for Graduate School & University Center, City University of New York, 365 Fifth Avenue, New York, NY 10016. Grant: $24,925 to Arielle Goldberg.
15. New York University, 15 Washington Place, #1H, New York, NY 10003. Grant: $25,000 to Michael McQuarrie.
16. Florida State University, 97 South Woodward Avenue, 3rd Floor, Tallahassee, FL 32306. Grant: $20,000 to Gregory Burge.

Dated: December 1, 2004.

Dennis C. Shea,

Assistant Secretary for Policy Development and Research.

[FR Doc. 04–27413 Filed 12–14–04; 8:45 am]

BILLING CODE 4210–62–M

DEPARTMENT OF THE INTERIOR

Office of the Secretary

Proposed Alternative Dispute Resolution (ADR) Pilot Referral Program for Interior Board of Land Appeals

AGENCY: Office of the Secretary, Interior.

ACTION: Notice.

SUMMARY: The Office of Hearings and Appeals (OHA), Department of the Interior (DOI), in collaboration with DOI's Office of Collaborative Action and Dispute Resolution (CADR) and the U.S. Institute for Environmental Conflict Resolution, has developed an alternative dispute resolution (ADR) pilot referral program for the Interior Board of Land Appeals (IBLA). The IBLA pilot program is one component of a Department-wide effort to expand the appropriate use of ADR processes to address environmental, public lands, and natural resources disputes involving DOI's bureaus and offices. OHA is making available for public review and comment a number of documents that describe and will be used to implement the IBLA pilot program.

DATES: To be considered, written or electronic comments on the IBLA pilot program must be received on or before January 14, 2005.

ADDRESSES: Interested parties are invited to submit comments on the IBLA pilot program. You may submit comments by any of the following methods:

- *Mail:* Submit written comments to the Interior Board of Land Appeals, Office of Hearings and Appeals, U.S. Department of the Interior, 801 N. Quincy Street, Suite 300, Arlington, VA 22203.
- *Fax:* Send comments by facsimile to the Interior Board of Land Appeals at (703) 235–8349.
- *Direct Internet Response:* Submit electronic comments by following the instructions for submitting comments provided at the following Web site: *http://www.blm.gov/nhp/news/regulatory/index.htm.*

Received comments will be available for public review. Comments may be inspected between 9 a.m. and 4 p.m., Monday through Friday, at the address provided above. Comments may also be viewed electronically at the Web site listed above.

FOR FURTHER INFORMATION CONTACT: Sara Greenberg, Dispute Resolution Specialist, Office of Hearings and Appeals, U.S. Department of the Interior, 801 N. Quincy Street, Suite 300, Arlington, VA 22203, 703–235–3750.

SUPPLEMENTARY INFORMATION: The IBLA pilot program has two main components:

- During the initial case docketing process, IBLA will alert parties to the availability of voluntary ADR processes to achieve settlement of their appeals.
- Following a preliminary review of the appeal, IBLA will select, through use of ADR suitability criteria, appeals that may be appropriate for direct negotiation, assisted negotiation/mediation, or other ADR processes (for example, joint fact-finding).

The IBLA pilot program is intended to educate parties about the potential for ADR and offer them an opportunity to develop creative solutions to their disputes, thereby reducing the expense and time involved in the appeals process and potentially limiting further litigation.

The documents for public review and comment include the following:

- A description of the IBLA pilot program;
- A one-page ''ADR Referral Data Sheet,'' containing general information about ADR, which would be included with the docketing notice sent to the parties in each case;
- An ''IBLA Pilot ADR Referral Program Information Sheet,'' which includes more detailed information about the pilot referral program and which would be sent to parties whose appeals are identified as suitable for ADR or who request further information; and
- Responses to Frequently Asked Questions.

Electronic copies of the documents for public review can be viewed at the Bureau of Land Management Regulatory Actions Web site, *http://www.blm.gov/nhp/news/regulatory/index.htm.* To view the documents, go to the Web site and click on ''Web based automated regulations comment system''; select ''Interior Board of Land Appeals'' and ''View/Create Comments for Open Regulations''; click on the link for IBLA; click on ''Pilot Alternative Dispute Resolution (ADR) Referral Program''; and then click on the available documents.

Electronic versions of the documents are also available on the CADR Web site at *http://www.doi.gov/cadr/.* Click on the link for the Office of Hearings and Appeals.

Hard copies of the documents can be obtained from the Interior Board of Land Appeals, Office of Hearings and Appeals, U.S. Department of the Interior, 801 N. Quincy Street, Suite 300, Arlington, VA 22203, 703–235–3750.

The development and implementation of the IBLA pilot program is authorized by the Administrative Dispute Resolution Act of 1996, 5 U.S.C. 571–584.

Dated: December 6, 2004.

Robert S. More,

Director, Office of Hearings and Appeals.

[FR Doc. 04–27453 Filed 12–14–04; 8:45 am]

BILLING CODE 4310–79–P

DEPARTMENT OF THE INTERIOR

Bureau of Land Management

[NM–070–1430–ES; NMNM–1010121]

Notice of Realty Action: Direct Sale of Public Lands

AGENCY: Bureau of Land Management.

ACTION: Non-Competitive Sale of Public Lands in San Juan County, New Mexico.

SUMMARY: The following described public lands in New Mexico, San Juan County, New Mexico have been examined and found suitable for sale to the City of Bloomfield for an industrial park, utilizing non-competitive procedures, at not less than the fair market value of $500,000.00 as approved by the Bureau of Land Management Appraisal staff. Authority for the sale is Section 203 of the Federal Land Policy and Management Act of 1976 (FLPMA) and 43 CFR 2711.3.3(a)(1).

New Mexico Principle Meridian, New Mexico

T. 29 N., R. 11 W.,
Sec. 34: SW¼NW¼SW¼NE¼, NW¼SW¼SE¼SW¼SW¼NE¼, SW¼SW¼SW¼NE¼. SE¼SW¼SW¼NE¼, SW¼SE¼SW¼NE¼, S½NE¼SE¼NW¼, SE¼NW¼SE¼NW¼, E½SW¼SE¼NW¼, SE¼SE¼NW¼, NE¼NE¼SW¼, E½NW¼NE¼SW¼, E½SW¼NE¼SW¼, SE¼NE¼SW¼, N½NE¼SE¼SW¼, NE¼NW¼SE¼SW¼, W½NE¼NW¼SE¼, NW¼NW¼SE¼, SW¼NW¼SE¼, W½SE¼NW¼SE¼, NW¼NE¼SW¼SE¼, N½NW¼SW¼NE¼.

FOR FURTHER INFORMATION CONTACT: Information related to this action, including the environmental assessment, is available for review at the Bureau of Land Management, Farmington Field Office, 1235 La Plata Highway, Suite A, Farmington, New Mexico 87401, from 7:45 to 4:30 Monday through Friday or call (505) 599–8900).

SUPPLEMENTARY INFORMATION: The land contains 110 acres, more or less, located south of Bloomfield within the Bloomfield city limits. This parcel of land, situated in San Juan County is being offered as a direct sale to the City of Bloomfield, the adjacent property owner for an industrial park. This land is not required for any federal purposes. The proposed action is in compliance with the Farmington Resource Management Plan and Final Environmental Management Plan that was approved September 2003. The sale is consistent with current Bureau planning for this area and would be in the public interest. In the event of a sale, conveyance of surface interests only. The patent, when issued, will contain the following reservations to the United States:

1. Patent Reservations:

A. All valid existing rights (including rights-of-ways).

B. Reserve a right for the Federal Government to construct ditches and canals.

C. Reserve all minerals to the Federal Government.

Interested parties may submit comments to the Field Manager, Farmington Field Office, 1235 La Plata Highway, Suite A, Farmington, New Mexico 87401 until 45 days from the date of publication of this notice in the **Federal Register**, Any adverse comments will be reviewed by the State Director who may sustain, vacate, or modify this realty action. In the absence of any adverse comments, this realty action will become the final determination of the Department of the Interior. The Bureau of Land Management may accept or reject any or all offers, or withdraw any land or interest in the land from sale, if, in the opinion of the authorized officer, consummation of the sale would not be fully consistent with FLPMA, or other applicable laws. The lands will not be offered for sale until at least 60 days after the date of publication of this notice in the **Federal Register**.

Joel Farrell,

Assistant Field Manager, Farmington, New Mexico.

[FR Doc. 04–27450 Filed 12–14–04; 8:45 am]

BILLING CODE 1430–VB–P

DEPARTMENT OF THE INTERIOR

Bureau of Land Management

[CO–130]

Emergency Closure

AGENCY: Bureau of Land Management, Interior.

ACTION: Closure notice.

SUMMARY: Under the authority of 43 CFR 8364.1 and 43 CFR 9268.3(d) notice is hereby given that an emergency closure to the discharge or use of a firearm or dangerous weapons for the purpose of target shooting is in effect, as of the publication date of this notice, on public lands administered by the Grand Junction Field Office of the Bureau of Land Management, as follows:

This order is put into effect to protect persons, property and resources located in this area from person(s) engaged in target shooting with firearms or dangerous weapons. Dangerous weapons include, but are not limited to: rifles, pistols, air guns, paint ball guns, bow and arrow, slingshot or any mechanical device that propels a projectile. This emergency order does not prohibit the discharge of firearms or

dangerous weapons while persons are engaged in bonafide hunting activities during established hunting seasons and are properly licensed for these activities.

DATES: This closure is effective upon publication and expires upon the passage of one year. During the one year period BLM Grand Junction FO will consider alternatives for the relocation of target shooting to a nearby safe location. An Environmental analysis will be prepared describing the effects of actions designed to resolve the issues.

After publication of this notice, two display signs will be erected at the closure sites to inform the public of the restrictions and direct them to appropriate safe locations to target shoot. In addition the perimeters of the closure areas will be signed. This information will also be available at the BLM Grand Junction Field Office and on line at our website.

Under the authority of 43 CFR 8364.1 and 43 CFR 9268.3(d), this closure is established to prohibit the discharge or use of dangerous weapons on the following public lands administered by the Grand Junction Field Office, Bureau of Land Management.

SE1/4 sec. 19; SW1/4 SW1/4 sec. 20; SE1/4 NW1/4, SW1/4 NE1/4, NE1/4SW1/4, NW1/4 SW1/4 sec. 30, T1S, R2E, Ute Meridian, Mesa County, Colorado.

FOR FURTHER INFORMATION CONTACT; Perry McCoy, BLM Ranger, Grand Junction Field Office, Bureau of Land Management, 2815 H. Rd., Grand Junction, CO 81506, telephone (970) 244–3000.

SUPPLEMENTARY INFORMATION: The affected area has been a popular location for target shooting in the Grand Valley for decades. BLM has received numerous complaints from neighboring land owners regarding indiscriminate use of fire arms in the area. In the past five years many new residences have been constructed along the urban interface zone bordering BLM managed lands in this area. Several near misses of neighbors have been reported. The Federal Aviation Administration maintains an aircraft communications facility in the affected zone. This installation handles aircraft communications for civilian, commercial and military air traffic in western Colorado. The facility has been vandalized and struck by bullets on a regular basis. Damage to this facility could interfere with air traffic and be a threat to national security. Violations of this closure are punishable by a fine of not more than $100,000 and/or imprisonment of not more than 12 months as provided in 43 CFR 8360, 43 CFR 9268.3(d)(2), and 18 U.S.C. 3571.

Dated: October 4, 2004.

Raul Morales,

Associate Field Manager.

[FR Doc. 04–27386 Filed 12–14–04; 8:45 am]

BILLING CODE 4310–JB–P

DEPARTMENT OF THE INTERIOR

Bureau of Reclamation

Water Transfer Program for the San Joaquin River Exchange Contractors Water Authority, 2005 to 2014

AGENCY: Bureau of Reclamation, Interior.

ACTION: Notice of availability of the joint Final Environmental Impact Statement/Environmental Impact Report (Final EIS/EIR) FES 04–50.

SUMMARY: Pursuant to the National Environmental Policy Act (NEPA) and the California Environmental Quality Act (CEQA), the Bureau of Reclamation (Reclamation) and the San Joaquin River Exchange Contractors Water Authority (Exchange Contractors) have prepared a Final EIS/EIR for a 10-year water transfer program. The program would consist of the transfer of up to 130,000 acre-feet of substitute water (a maximum of 80,000 acre-feet of developed water from conservation measures, including tailwater recovery, and groundwater pumping and a maximum of 50,000 acre-feet from temporary land fallowing) from the Exchange Contractors to other Central Valley Project (CVP) contractors, to Reclamation for delivery to the San Joaquin Valley wetland habitat areas (wildlife refuges), and to Reclamation and/or DWR for use by the CALFED Environmental Water Account (EWA) as replacement water for CVP contractors. Reclamation would approve and/or execute short-term and/or long-term temporary water transfers or agreements.

A Notice of Availability of the joint Draft EIS/EIR was published in the **Federal Register** on Wednesday, June 16, 2004 (69 FR 33659). The written comment period on the Draft EIS/EIR ended Monday, August 2, 2004. The Final EIS and Final EIR contain responses to all comments received and reflect comments and any additional information received during the review period.

DATES: Reclamation will not make a decision on the proposed action until at least 30 days after release of the Final EIS/EIR. After the 30-day waiting period, Reclamation will complete a Record of Decision (ROD). The ROD will state the action that will be implemented and will discuss all factors leading to the decision.

ADDRESSES: A compact disk or a copy of the Final EIS/EIR may be requested from Mr. Bob Eckart, Bureau of Reclamation, Mid-Pacific Region, Division of Environmental Affairs, 2800 Cottage Way, Sacramento, California 95825, at (916) 978–5051 (Fax: (916) 978–5055), or by e-mail at *reckart@mp.usbr.gov.* The final document is available online at *http://www.usbr.gov/mp.*

See **SUPPLEMENTARY INFORMATION** section for locations where copies of the Final EIS/EIR are available for public inspection.

FOR FURTHER INFORMATION CONTACT: Mr. Bob Eckart at the above address, by calling (916) 978–5051, or by e-mail: *reckart@mp.usbr.gov.*

SUPPLEMENTARY INFORMATION: The purpose/objective of the proposed 10-year transfer program is the transfer of water from the Exchange Contractors to:

- South of Delta and Friant Unit CVP contractors to meet demands of agriculture, municipal, and industrial uses,
- The Department of the Interior's Water Acquisition Program for delivery to the San Joaquin Valley Federal, State, and private wildlife refuges to meet Incremental Level 4 needs, and/or
- Reclamation and/or DWR for use by the CALFED EWA Program to benefit CVP operations by providing replacement water to CVP contractors.

The Exchange Contractors' proposed water transfer program would assist Reclamation in maximizing the use of limited existing water resources for agriculture, fish and wildlife resources, and municipal and industrial purposes. Water would be transferred to other CVP contractors to support the production of agricultural crops and livestock within the limits of their current agreements. CVP contractors include Santa Clara Valley Water District which is in need of short-term water supplies to support agriculture, municipal, and industrial uses in Santa Clara County. Reclamation's Water Acquisition Program needs additional water to provide the refuges with the increment between Level 2 and Level 4 water quantities for fish and wildlife habitat development. Reclamation and/or DWR may also need to acquire additional CVP water south of the Delta to replace water used for fish protection actions pursuant to CALFED's EWA Program (for the benefit of the CVP).

The water transfers would occur largely within the San Joaquin Valley of Central California. The Exchange

Contractors service area covers parts of Fresno, Madera, Merced, and Stanislaus counties. The agricultural water users that would benefit from the potential transfers are located in the counties of Stanislaus, San Joaquin, Merced, Madera, Fresno, San Benito, Santa Clara, Tulare, Kings, and Kern. The wetland habitat areas that may receive the water are located in Merced, Fresno, Tulare, and Kern counties. Water purchased for use by Reclamation and/or DWR for the EWA may be provided to CVP contractors in the West San Joaquin and San Felipe divisions to replace water bypassed at Tracy Pumping Plant pursuant to EWA fish protection actions.

The Draft EIS/EIR addressed impacts associated with water development by the Exchange Contractors and related effects associated with water use by CVP contractors and the wildlife refuges. Resources evaluated for potential direct and indirect effects from the proposed transfer program include: surface water, groundwater, biological (vegetation, wildlife, and fisheries), air quality, land use (including agriculture), socioeconomics, Indian Trust Assets, and environmental justice. An evaluation of cumulative hydrologic and water service area impacts associated with reasonably foreseeable actions is included also.

One public hearing was held on July 7, 2004 in Los Banos, California.

Copies of the Final EIS/EIR are available for public inspection and review at the following locations:

- Bureau of Reclamation, Office of Public Affairs, 2800 Cottage Way, Sacramento, CA 95825–1898; telephone: (916) 978–5100.
- San Joaquin River Exchange Contractors Water Authority, 541 H Street, Los Banos, CA 93635; telephone: (209) 827–8616.
- California State Library, 914 Capitol Mall, Suite E–29, Sacramento.
- Resources Agency Library, 1416 Ninth Street, Suite 117, Sacramento.
- San Francisco Public Library, McAllister and Larkin, San Francisco.
- Fresno County Public Library, 2420 Mariposa Street, Fresno.
- Merced County Public Library, 1312 South 7th Street, Los Banos.
- Santa Clara County Public Library, 10441 Bandley Drive, Cupertino.
- Kern County Library, 701 Truxton Avenue, Bakersfield.
- UCD Shields Library, Documents Department, University of California, Davis.
- UCB Water Resources Center Archives, 410 O'Brien Hall, Berkeley.

It is Reclamation's policy to make comments, including names and home addresses of respondents, available for public review. Individual respondents may request that we withhold their home address from public disclosure, which will be honored to the extent allowable by law. There may be circumstances in which a respondent's identity may also be withheld from public disclosure, as allowable by law. If you wish to have your name and/or address withheld, you must state this prominently at the beginning of your comment. All submissions from organizations or businesses, and from individuals identifying themselves as representatives or officials of organizations or businesses, will be made available for public disclosure in their entirety.

Dated: November 19, 2004.

John F. Davis,

Deputy Regional Director, Mid-Pacific Region.

[FR Doc. 04–27389 Filed 12–14–04; 8:45 am]

BILLING CODE 4310–MN–P

INTERNATIONAL TRADE COMMISSION

[Inv. No. 337–TA–511]

In the Matter of Certain Pet Food Treats; Notice of Decision To Review an Initial Determination Finding Respondent TsingTao China in Default

AGENCY: International Trade Commission.

ACTION: Notice.

SUMMARY: Notice is hereby given that the U.S. International Trade Commission has determined not to review an initial determination (ID) issued by the presiding administrative law judge (ALJ) in the above-captioned investigation finding respondent TsingTao ShengRong Seafood, Inc. of TsingTao China (''TsingTao China'') in default.

FOR FURTHER INFORMATION CONTACT: Andrea Casson, Esq., Office of the General Counsel, U.S. International Trade Commission, 500 E Street, SW., Washington, DC 20436, telephone (202) 205–3105. Copies of all nonconfidential documents filed in connection with this investigation are or will be available for inspection during official business hours (8:45 a.m. to 5:15 p.m.) in the Office of the Secretary, U.S. International Trade Commission, 500 E Street SW., Washington, DC 20436, telephone (202) 205–2000. General information concerning the Commission may also be obtained by accessing its Internet server (*http://www.usitc.gov*). The public record for this investigation may be viewed on the Commission's electronic docket (EDIS) at *http://edis.usitc.gov.* Hearing-impaired persons are advised that information on this matter can be obtained by contacting the Commission's TDD terminal on (202) 205–1810.

SUPPLEMENTARY INFORMATION: The Commission instituted this investigation on June 8, 2004, based on a complaint filed by Thomas J. Baumgartner and Hillbilly Smokehouse, Inc., both of Rogers, Arkansas, 69 FR 32044. The complaint alleges violations of section 337 in the importation into the United States, sale for importation, or sale within the United States after importation of certain pet food treats that infringe U.S. Design Patent No. 383,886. The notice of investigation lists six companies as respondents, including TsingTao China.

On August 18, 2004, complainants moved pursuant to section 337(g) and Commission rule 210.16(b) for issuance of an order directing, *inter alia,* TsingTao China, to show cause why it should not be found in default. Complainants noted that TsingTao China had not responded to the complaint and notice of investigation. On August 30, 2004, the Commission investigative attorney filed a response supporting complainant's motion for an order requiring TsingTao China to show cause why it should not be held in default.

On October 5, 2004, the ALJ issued Order No. 6, which ordered TsingTao China to show cause by October 12, 2004, why it should not be found in default. TsingTao China did not respond to the order to show cause. On November 19, 2004, the ALJ issued an ID (Order No. 8) finding TsingTao China in default. Under Commission rule 210.16(b)(3), TsingTao China is deemed to have waived its right to appear, to be served with documents, and to contest the allegations at issue in this investigation. No petitions for review of the ID were filed.

The authority for the Commission's determination is contained in section 337 of the Tariff Act of 1930, as amended (19 U.S.C. 1337), and in section 210.42 of the Commission's Rules of Practice and Procedure (19 CFR 210.42).

Issued: December 9, 2004.

By order of the Commission.

Marilyn R. Abbott,

Secretary to the Commission.

[FR Doc. 04–27392 Filed 12–14–04; 8:45 am]

BILLING CODE 7020–02–P

DEPARTMENT OF LABOR

Employee Benefits Security Administration

[Application Number D–11046]

Proposed Amendment to Prohibited Transaction Exemption 80–26 (PTE 80–26) For Certain Interest Free Loans to Employee Benefit Plans

AGENCY: Employee Benefits Security Administration, U.S. Department of Labor.

ACTION: Notice of Proposed Amendment to PTE 80–26.

SUMMARY: This document contains a notice of pendency before the Department of Labor (the Department) of a proposed amendment to PTE 80–26. PTE 80–26 is a class exemption that permits parties in interest with respect to employee benefit plans to make certain interest free loans to such plans, provided the conditions of the exemption are met. The proposed amendment, if adopted, would affect all employee benefit plans, the participants and beneficiaries of such plans, and parties in interest with respect to those plans engaging in the described transactions.

DATES: If adopted, the proposed amendment would be effective as of the date the granted amendment is published in the **Federal Register**. Written comments and requests for a public hearing should be received by the Department on or before January 31, 2005.

ADDRESSES: All written comments and requests for a public hearing (preferably three copies) should be addressed to the U.S. Department of Labor, Office of Exemption Determinations, Employee Benefits Security Administration, Room N–5649, 200 Constitution Avenue, NW., Washington, DC 20210, (attention: PTE 80–26 Amendment). Interested persons are also invited to submit comments and/or hearing requests to the Employee Benefits Security Administration via e-mail to moffitt.betty@dol.gov or by fax to (202)219–0204 by the end of the comment period.

FOR FURTHER INFORMATION CONTACT: Christopher Motta, Office of Exemption Determinations, Employee Benefits Security Administration, U.S. Department of Labor, (202) 693–8554 (this is not a toll-free number).

SUPPLEMENTARY INFORMATION: Notice is hereby given of the pendency before the Department of a proposed amendment to PTE 80–26 (45 FR 28545, April 29, 1980, as amended at 65 FR 17540, April 3, 2000; and 67 FR 9485, March 1, 2002).[1] PTE 80–26 provides an exemption from the restrictions of section 406(a)(1)(B) and (D) and section 406(b)(2) of the Employee Retirement Income Security Act of 1974 (ERISA or the Act) and from the taxes imposed by section 4975(a) and (b) of the Internal Revenue Code of 1986 (the Code), by reason of section 4975(c)(1)(B) and (D) of the Code.

The Department is proposing the amendment on its own motion pursuant to section 408(a) of ERISA and section 4975(c)(2) of the Code, and in accordance with the procedures set forth in 29 CFR Part 2570, Subpart B (55 FR 32836, 32847, August 10, 1990).[2]

A. General Background

The prohibited transaction provisions of the Act generally prohibit transactions between a plan and a party in interest (including a fiduciary) with respect to such plan. Specifically, section 406(a)(1)(B) and (D) of the Act provides that a fiduciary with respect to a plan shall not cause the plan to engage in a transaction, if he knows or should know that such transaction constitutes a direct or indirect-

(B) lending of money or other extension of credit between the plan and a party in interest; or

(D) transfer to, or use by or for the benefit of, a party in interest, of any assets of the plan.

Accordingly, unless a statutory or administrative exemption is applicable, loans, including interest free loans, to a plan from a party in interest and the repayment of such loans are prohibited.

In addition, section 406(b)(2) of the Act provides that a fiduciary with respect to a plan shall not, in his individual or any other capacity act in a transaction involving the plan on behalf of a party (or represent a party) whose interests are adverse to the interests of the plan or the interests of its participants or beneficiaries.

B. Description of Existing Relief

Section I of PTE 80–26 permits the lending of money or other extension of credit from a party in interest or disqualified person to an employee benefit plan, and the repayment of such loan or other extension of credit in accordance with its terms or other written modifications thereof, if:

(a) No interest or other fee is charged to the plan, and no discount for payment in cash is relinquished by the plan, in connection with the loan or extension of credit;

(b) The proceeds of the loan or extension of credit are used only—

(1) For the payment of ordinary operating expenses of the plan, including the payment of benefits in accordance with the terms of the plan and periodic premiums under an insurance or annuity contract, or

(2) For a period of no more than three days, for a purpose incidental to the ordinary operation of the plan;

(c) The loan or extension of credit is unsecured; and

(d) The loan or extension of credit is not directly or indirectly made by an employee benefit plan.

On April 3, 2000, PTE 80–26 was amended to permit, from November 1, 1999 through December 31, 2000, the lending of money or other extension of credit from a party in interest or disqualified person to an employee benefit plan, and the repayment of such loan or other extension of credit in accordance with its terms or written modifications thereof, provided that, among other requirements, the proceeds of the loan or extension of credit are used only for a purpose incidental to the ordinary operation of the plan which arises in connection with the inability of the plan to liquidate, or otherwise access its assets or access data, as a result of a ''Y2K problem.'' This amendment also added a new section to the class exemption that provided a definition of the term ''Y2K problem.''

On March 1, 2002, PTE 80–26 was amended to permit, from September 11, 2001 through January 9, 2002, the lending of money or other extension of credit from a party in interest or disqualified person to an employee benefit plan, and the repayment of such loan or other extension of credit in accordance with its terms or written modifications thereof, provided that, among another requirements, the proceeds of the loan or extension of credit were used only for a purpose incidental to the ordinary operation of the plan which arose in connection with difficulties encountered by the plan in liquidating, or otherwise accessing its assets, or accessing its data in a timely manner as a direct or indirect result of the September 11, 2001 disruption. This amendment also added a definition of the term ''September 11, 2001 disruption'' to the class exemption.

C. Discussion of the Proposed Exemption

The Department, on its own motion, proposes to amend PTE 80–26 by removing the three-day limitation that is

[1] A minor correction was made to the title of the final exemption in a notice published in the **Federal Register** on May 23, 1980, (45 FR 35040).

[2] Section 102 of the Reorganization Plan No. 4 of 1978 (5 U.S.C. App. 1 [1996]) generally transferred the authority of the Secretary of the Treasury to issue administrative exemptions under section 4975 of the Code to the Secretary of Labor.

imposed on the lending of money or other extension of credit for purposes incidental to the ordinary operation of the plan. In this regard, the Department recognizes that a plan may benefit if permitted to enter into an interest-free loan with a party in interest or disqualified person for a purpose incidental to the ordinary operation of the plan in instances where the duration of the loan exceeds three days. Specifically, the Department believes that the conditions currently contained in the class exemption are sufficient to ensure that such loans would pose little, if any, risk of abuse or loss to the plan and its participants and beneficiaries. Accordingly, the Department believes that, with respect to an interest-free loan having a duration of more than three days that is entered into under the class exemption for a purpose incidental to the ordinary operation of a plan, the plan would be adequately protected to the extent that, among other things: no interest or other fee is charged to the plan; no discount for payment in cash is relinquished by the plan; and each loan or extension of credit is unsecured. Consistent with the Department's view that loans described in section 408(b)(3) of ERISA and/or section 4975(d)(3) of the Code are not within the scope of PTE 80–26, such loans are expressly excluded from the relief described herein.

This proposed amendment incorporates the clarification described in PTE 2002–13 (67 FR 9483 (Mar. 1, 2002)). In this regard, the proposed exemption specifically defines the terms ''employee benefit plan'' and ''plan'' as an employee benefit plan described in ERISA section 3(3) and/or a plan described in section 4975(e)(1) of the Code.

The Department notes that ERISA's general standards of fiduciary conduct apply to the decision of an independent fiduciary to enter into an interest free loan and any related transactions. Section 404 requires a fiduciary, among other things, to discharge his duties respecting a plan solely in the interest of the plan's participants and beneficiaries and in a prudent fashion. Accordingly, the plan fiduciary must act prudently with respect to the decision to enter into the loan and any related transactions. In this regard, the proposed removal of the three-day limitation from PTE 80–26 should not be viewed as an approval by the Department of any transactions that may give rise to the need for a loan or other extension of credit. The Department is not providing any relief under this proposal for any violation of ERISA which may arise in connection with a transaction involving an interest free loan, notwithstanding that such loan otherwise complies with the conditions of this proposed exemption.

General Information

The attention of interested persons is directed to the following:

(1) The fact that a transaction is the subject of an exemption under section 408(a) of ERISA and section 4975(c)(2) of the Code does not relieve a fiduciary, or other party in interest or disqualified person with respect to a plan, from certain other provisions of ERISA and the Code, including any prohibited transaction provisions to which the exemption does not apply and the general fiduciary responsibility provisions of section 404 of ERISA which require, among other things, that a fiduciary act prudently and discharge his or her duties respecting the plan solely in the interests of the participants and beneficiaries of the plan. Additionally, the fact that a transaction is the subject of an exemption does not affect the requirement of section 401(a) of the Code that the plan must operate for the exclusive benefit of the employees of the employer maintaining the plan and their beneficiaries;

(2) This exemption does not extend to transactions prohibited under section 406(b)(1) and (3) of the Act or section 4975(c)(1)(E) or (F) of the Code;

(3) Before an exemption may be granted under section 408(a) of ERISA and section 4975(c)(2) of the Code, the Department must find that the exemption is administratively feasible, in the interests of the plan and of its participants and beneficiaries, and protective of the rights of participants and beneficiaries of the plan;

(4) If granted, the proposed amendment is applicable to a particular transaction only if the transaction satisfies the conditions specified in the exemption; and

(5) The proposed amendment, if granted, will be supplemental to, and not in derogation of, any other provisions of ERISA and the Code, including statutory or administrative exemptions and transitional rules. Furthermore, the fact that a transaction is subject to an administrative or statutory exemption is not dispositive of whether the transaction is in fact a prohibited transaction.

Written Comments and Hearing Request

The Department invites all interested persons to submit written comments or requests for a public hearing on the proposed amendment to the address and within the time period set forth above. All comments received will be made a part of the record. Comments and requests for a hearing should state the reasons for the writer's interest in the proposed exemption. Comments received will be available for public inspection at the above address.

Proposed Amendment

Under section 408(a) of the Act and section 4975(c)(2) of the Code and in accordance with the procedures set forth in 29 CFR 2570, Subpart B (55 FR 32836, 32847, August 10, 1990), the Department proposes to amend PTE 80–26 as set forth below:

Section I. Retroactive General Exemption

If this proposed class exemption is granted, effective January 1, 1975 until the date of publication of the final exemption in the **Federal Register**, the restrictions of section 406(a)(1)(B) and (D) and section 406(b)(2) of the Act, and the taxes imposed by section 4975(a) and (b) of the Code, by reason of section 4975(c)(1)(B) and (D) of the Code, shall not apply to the lending of money or other extension of credit from a party in interest or disqualified person to an employee benefit plan, nor to the repayment of such loan or other extension of credit in accordance with its terms or written modifications thereof, if:

(a) No interest or other fee is charged to the plan, and no discount for payment in cash is relinquished by the plan, in connection with the loan or extension of credit;

(b) The proceeds of the loan or extension of credit are used only—

(1) for the payment of ordinary operating expenses of the plan, including the payment of benefits in accordance with the terms of the plan and periodic premiums under an insurance or annuity contract, or

(2) for a period of no more than three business days, for a purpose incidental to the ordinary operation of the plan;

(c) The loan or extension of credit is unsecured; and

(d) The loan or extension of credit is not directly or indirectly made by an employee benefit plan.

Section II: Temporary Exemption

Effective November 1, 1999 through December 31, 2000, the restrictions of section 406(a)(1)(B) and (D) and section 406(b)(2) of the Act, and the taxes imposed by section 4975(a) and (b) of the Code, by reason of section 4975(c)(1)(B) and (D) of the Code, shall not apply to the lending of money or other extension of credit from a party in interest or disqualified person to an employee benefit plan, nor to the

repayment of such loan or other extension of credit in accordance with its terms or written modifications thereof, if:

(a) No interest or other fee is charged to the plan, and no discount for payment in cash is relinquished by the plan, in connection with the loan or extension of credit;

(b) The proceeds of the loan or extension of credit are used only for a purpose incidental to the ordinary operation of the plan which arises in connection with the plan's inability to liquidate, or otherwise access its assets or access data as a result of a Y2K problem.

(c) The loan or extension of credit is unsecured;

(d) The loan or extension of credit is not directly or indirectly made by an employee benefit plan; and

(e) The loan or extension of credit begins on or after November 1, 1999 and is repaid or terminated no later than December 31, 2000.

Section III. September 11, 2001 Market Disruption Exemption

Effective September 11, 2001 through January 9, 2002, the restrictions of section 406(a)(1)(B) and (D) and section 406(b)(2) of the Act, and the taxes imposed by section 4975(a) and (b) of the Code, by reason of section 4975(c)(1)(B) and (D) of the Code, shall not apply to the lending of money or other extension of credit from a party in interest or disqualified person to an employee benefit plan, nor to the repayment of such loan or other extension of credit in accordance with its terms or written modifications thereof, if:

(a) No interest or other fee is charged to the plan, and no discount for payment in cash is relinquished by the plan, in connection with the loan or extension of credit;

(b) The proceeds of the loan or extension of credit are used only for a purpose incidental to the ordinary operation of the plan which arises in connection with difficulties encountered by the plan in liquidating, or otherwise accessing its assets, or accessing its data in a timely manner as a direct or indirect result of the September 11, 2001 disruption;

(c) The loan or extension of credit is unsecured;

(d) The loan or extension of credit is not directly or indirectly made by an employee benefit plan; and

(e) The loan or extension of credit begins on or after September 11, 2001, and is repaid or terminated no later than January 9, 2002.

Section IV. Prospective General Exemption

If this proposed class exemption is granted, effective as of the date following the date of publication of the final exemption in the **Federal Register**, the restrictions of section 406(a)(1)(B) and (D) and section 406(b)(2) of the Act, and the taxes imposed by section 4975(a) and (b) of the Code, by reason of section 4975(c)(1)(B) and (D) of the Code, shall not apply to the lending of money or other extension of credit from a party in interest or disqualified person to an employee benefit plan, nor to the repayment of such loan or other extension of credit in accordance with its terms or written modifications thereof, if:

(a) No interest or other fee is charged to the plan, and no discount for payment in cash is relinquished by the plan, in connection with the loan or extension of credit;

(b) The proceeds of the loan or extension of credit are used only—

(1) for the payment of ordinary operating expenses of the plan, including the payment of benefits in accordance with the terms of the plan and periodic premiums under an insurance or annuity contract, or

(2) for a purpose incidental to the ordinary operation of the plan;

(c) The loan or extension of credit is unsecured;

(d) The loan or extension of credit is not directly or indirectly made by an employee benefit plan; and

(3) The loan is not described in section 408(b)(3) of ERISA or section 4975(d)(3) of the Code.

Section V: Definitions

(a) For purposes of section II, a ''Y2K problem'' is a disruption of computer operations resulting from a computer system's inability to process data because such system recognizes years only by the last two digits, causing a ''00'' entry to be read as the year ''1900'' rather than the year ''2000.''

(b) For purposes of section III, the ''September 11, 2001 disruption'' is the disruption to the United States financial and securities markets and/or the operation of persons providing administrative services to employee benefit plans, resulting from the acts of terrorism that occurred on September 11, 2001.

(c) For purposes of this exemption, the terms ''employee benefit plan'' and ''plan'' refer to an employee benefit plan described in ERISA section 3(3) and/or a plan described in section 4975(e)(1) of the Code.

Signed at Washington, DC, this 10th day of December, 2004.

Ivan L. Strasfeld,

Director, Office of Exemption Determinations, Employee Benefits Security Administration U.S. Department of Labor.

[FR Doc. 04–27451 Filed 12–14–04; 8:45 am]

BILLING CODE 4520–29–P

NUCLEAR REGULATORY COMMISSION

Sunshine Act Meeting

AGENCY HOLDING THE MEETING: Nuclear Regulatory Commission

DATE: Week of December 13, 2004.

PLACE: Commissioners' Conference Room, 11555 Rockville Pike, Rockville, Maryland.

STATUS: Public and Closed.

ADDITIONAL MATTERS TO BE CONSIDERED:

Week of December 13, 2004

Tuesday, December 14, 2004

12:55 p.m. Affirmation Session (Public Meeting) (Tentative)

A. Hydro Resources, Inc. Petition for Review of LBP–04–23 (Final Environmental Impact Statement Supplementation) (Tentative)

b. State of Alaska Department of Transportation and Public Facilities (Confirmatory Order Modifying License); Intervenor's Motion for Reconsideration of CLI–04–26 (Tentative)

c. Final Amendments to 10 CFR Part 50, Appendix E, Relating to (1) Nuclear Regulatory Commission Review of Changes to Emergency Action Levels, Paragraph IV.B and (2) Exercise Requirements for Co-Located Licensees, Paragraph IV.F.2 (Tentative)

1 p.m. Briefing on Emergency Preparedness Program Initiatives (Public Meeting) (Contact: Nader Mamish, 301–415–1086)

This meeting will be webcast live at the Web address—*http://www.nrc.gov.*

The schedule for Commission meetings is subject to change on short notice. To verify the status of meetings call (recording)—(301) 415–1292. Contact person for more information: Dave Gamberoni, (301) 415–1651.

* * * * *

The NRC Commission Meeting Schedule can be found on the Internet at: *http://www.nrc.gov/what-we-do/policy-making/schedule.html.*

* * * * *

The NRC provides reasonable accommodation to individuals with disabilities where appropriate. If you need a reasonable accommodation to

participate in these public meetings, or need this meeting notice or the transcript or other information from the public meetings in another format (*e.g.,* braille, large print), please notify the NRC's Disability program Coordinator, August Spector, at 301–415–7080, TDD: 301–415–2100, or by e-mail at *aks@nrc.gov.* Determinations on requests for reasonable accommodation will be made on a case-by-case basis.

* * * * *

This notice is distributed by mail to several hundred subscribers; if you no longer wish to receive it, or would like to be added to the distribution, please contact the Office of the Secretary, Washington, DC 20555 (301–415–1969). In addition, distribution of this meeting notice over the Internet system is available. If you are interested in receiving this Commission meeting schedule electronically please send an electronic message to *dkw@nrc.gov.*

Dated: December 10, 2004.

Sandy Joosten,

Office of the Secretary.

[FR Doc. 04–27491 Filed 12–13–04; 9:24 am]

BILLING CODE 7590–01–M

PENSION BENEFIT GUARANTY CORPORATION

Required Interest Rate Assumption for Determining Variable-Rate Premium; Interest Assumptions for Multiemployer Plan Valuations Following Mass Withdrawal

AGENCY: Pension Benefit Guaranty Corporation.

ACTION: Notice of interest rates and assumptions.

SUMMARY: This notice informs the public of the interest rates and assumptions to be used under certain Pension Benefit Guaranty Corporation regulations. These rates and assumptions are published elsewhere (or can be derived from rates published elsewhere), but are collected and published in this notice for the convenience of the public. Interest rates are also published on the PBGC's Web site (*http://www.pbgc.gov*).

DATES: The required interest rate for determining the variable-rate premium under part 4006 applies to premium payment years beginning in December 2004. The interest assumptions for performing multiemployer plan valuations following mass withdrawal under part 4281 apply to valuation dates occurring in January 2005.

FOR FURTHER INFORMATION CONTACT: Harold J. Ashner, Assistant General Counsel, Office of the General Counsel, Pension Benefit Guaranty Corporation, 1200 K Street, NW., Washington, DC 20005, 202–326–4024. (TTY/TDD users may call the Federal relay service toll-free at 1–800–877–8339 and ask to be connected to 202–326–4024.)

SUPPLEMENTARY INFORMATION:

Variable-Rate Premiums

Section 4006(a)(3)(E)(iii)(II) of the Employee Retirement Income Security Act of 1974 (ERISA) and § 4006.4(b)(1) of the PBGC's regulation on Premium Rates (29 CFR part 4006) prescribe use of an assumed interest rate (the ''required interest rate'') in determining a single-employer plan's variable-rate premium. Pursuant to the Pension Funding Equity Act of 2004, for premium payment years beginning in 2004 or 2005, the required interest rate is the ''applicable percentage'' (currently 85 percent) of the annual rate of interest determined by the Secretary of the Treasury on amounts invested conservatively in long-term investment grade corporate bonds for the month preceding the beginning of the plan year for which premiums are being paid. Thus, the required interest rate to be used in determining variable-rate premiums for premium payment years beginning in December 2004 is 4.75 percent (*i.e.*, 85 percent of the 5.59 percent composite corporate bond rate for November 2004 as determined by the Treasury).

The following table lists the required interest rates to be used in determining variable-rate premiums for premium payment years beginning between January 2004 and December 2004.

For premium payment years beginning in:	The required interest rate is:
January 2004	4.94
February 2004	4.83
March 2004	4.79
April 2004	4.62
May 2004	4.98
June 2004	5.26
July 2004	5.25
August 2004	5.10
September 2004	4.95
October 2004	4.79
November 2004	4.73
December 2004	4.75

Multiemployer Plan Valuations Following Mass Withdrawal

The PBGC's regulation on Duties of Plan Sponsor Following Mass Withdrawal (29 CFR part 4281) prescribes the use of interest assumptions under the PBGC's regulation on Allocation of Assets in Single-Employer Plans (29 CFR part 4044). The interest assumptions applicable to valuation dates in January 2005 under part 4044 are contained in an amendment to part 4044 published elsewhere in today's **Federal Register**. Tables showing the assumptions applicable to prior periods are codified in appendix B to 29 CFR part 4044.

Issued in Washington, DC, on this 9th day of December 2004.

Joseph H. Grant,

Deputy Executive Director and Chief Operating Officer, Pension Benefit Guaranty Corporation.

[FR Doc. 04–27444 Filed 12–14–04; 8:45 am]

BILLING CODE 7708–01–P

SECURITIES AND EXCHANGE COMMISSION

Issuer Delisting; Notice of Application of Plymouth Rubber Company To Withdraw Its Class A and Class B Common Stock, $.01 par Value, From Listing and Registration on the American Stock Exchange LLC File No. 1–05197

December 9, 2004.

On November 30, 2004, Plymouth Rubber Company, Inc., a Massachusetts corporation (''Issuer''), filed an application with the Securities and Exchange Commission (''Commission''), pursuant to section 12(d) of the Securities Exchange Act of 1934 (''Act'') [1] and Rule 12d2–2(d) thereunder,[2] to withdraw its class A and class B common stock, $.01 par value (''Securities''), from listing and registration on the American Stock Exchange LLC (''Amex'').

The Issuer states that the reasons it is taking such action to withdraw its Securities from listing and registration on the Amex are as follows: (i) The Issuer's current non-compliance with certain Amex quantitative standards for continued listing; and (ii) the likely inability of the Issuer to regain compliance with Amex quantitative standards, in accordance with a plan of compliance the Issuer submitted to Amex, which the Amex approved in 2003, by the end of the current fiscal year on December 3, 2004. The Issuer states that it is currently considering the alternative over-the-counter markets to trade the Securities.

The Issuer states in its application that it has met the requirements of Amex Rule 18 by complying with all applicable laws in the State of Massachusetts, in which it is incorporated, and with the Amex's rules governing an issuer's voluntary

[1] 15 U.S.C. 78*l*(d).

[2] 17 CFR 240.12d2–2(d).

withdrawal of a security from listing and registration.

The Issuer's application relates solely to the withdrawal of the Securities from listing on the Amex and from registration under section 12(b) of the Act,[3] and shall not affect its obligation to be registered under section 12(g) of the Act.[4]

Any interested person may, on or before January 4, 2005, comment on the facts bearing upon whether the application has been made in accordance with the rules of the Amex, and what terms, if any, should be imposed by the Commission for the protection of investors. All comment letters may be submitted by either of the following methods:

Electronic Comments

- Send an e-mail to *rule-comments@sec.gov.* Please include the File Number 1–05197 or;

Paper Comments

- Send paper comments in triplicate to Jonathan G. Katz, Secretary, Securities and Exchange Commission, 450 Fifth Street, NW., Washington, DC 20549–0609.

All submissions should refer to File Number 1–05197. This file number should be included on the subject line if e-mail is used. To help us process and review your comments more efficiently, please use only one method. The Commission will post all comments on the Commission's Internet Web site (*http://www.sec.gov/rules/delist.shtml*). Comments are also available for public inspection and copying in the Commission's Public Reference Room, 450 Fifth Street, NW., Washington, DC 20549. All comments received will be posted without change; we do not edit personal identifying information from submissions. You should submit only information that you wish to make available publicly.

For the Commission, by the Division of Market Regulation, pursuant to delegated authority.[5]

Jonathan G. Katz,

Secretary.

[FR Doc. E4–3648 Filed 12–14–04; 8:45 am]

BILLING CODE 8010–01–P

[3] 15 U.S.C. 78*l*(b).

[4] 15 U.S.C. 78*l*(g).

[5] 17 CFR 200.30–3(a)(1).

SECURITIES AND EXCHANGE COMMISSION

[Release No. 34–50821; File No. SR–CBOE–2004–73]

Self-Regulatory Organizations; Notice of Filing of Proposed Rule Change by the Chicago Board Options Exchange, Inc. To Restrict a Designated Primary Market-Maker's Ability To Charge a Brokerage Commission

December 8, 2004.

Pursuant to section 19(b)(1) of the Securities Exchange Act of 1934 (''Act''),[1] and Rule 19b–4 thereunder,[2] notice is hereby given that on November 12, 2004, the Chicago Board Options Exchange, Inc. (''CBOE'' or ''Exchange'') filed with the Securities and Exchange Commission (''Commission'') the proposed rule change as described in items I, II, and III below, which items have been prepared by the Exchange. The Commission is publishing this notice to solicit comments on the proposed rule change from interested persons.

I. Self-Regulatory Organization's Statement of the Terms of Substance of the Proposed Rule Change

The Exchange proposes to amend its rules relating to a designated primary market-maker's (''DPMs'') ability to charge a brokerage commission. Proposed new language is in italics.

* * * * *

Rule 8.85. DPM Obligations

(a) Dealer Transactions. No Change.

(b) Agency Transactions. No Change.

(i)–(iii) No Change.

(iv) not charge any brokerage commission with respect to:

(1) the execution of any *portion of an* order for which the DPM has acted as both agent and principal, unless the customer who placed the order has consented to paying a brokerage commission to the DPM with respect to the DPM's execution of the order while acting as both agent and principal; *or*

(2) any portion of an order for which the DPM was not the executing floor broker, including any portion of the order that is automatically executed through an Exchange system; or

(3) any portion of an order that is automatically cancelled, or;

(4) any portion of an order that is not executed and not cancelled.

* * * * *

[1] 15 U.S.C. 78s(b)(1).

[2] 17 CFR 240.19b–4.

II. Self-Regulatory Organization's Statement of the Purpose of, and Statutory Basis for, the Proposed Rule Change

In its filing with the Commission, the Exchange included statements concerning the purpose of and basis for the proposed rule change and discussed any comments it received on the proposed rule change. The text of these statements may be examined at the places specified in item IV below. The Exchange has prepared summaries, set forth in sections A, B, and C below, of the most significant aspects of such statements.

A. Self-Regulatory Organization's Statement of the Purpose of, and the Statutory Basis for, the Proposed Rule Change

1. Purpose

The Exchange believes that the proposed rule change clarifies within CBOE rules that a DPM cannot charge a brokerage commission on orders for which they do not perform an agency function. The Exchange also believes the proposed rule change is both appropriate and necessary to clarify to the investing public that orders sent to the CBOE will not be subject to excessive or arbitrary costs. In addition to protecting investors, the Exchange believes that this rule change also preserves the competitiveness of the Exchange.

Therefore, the Exchange proposes to amend CBOE rules that govern DPMs to specifically prohibit DPMs from charging a brokerage commission for an order, or the portion of an order, (1) for which the DPM was not the executing broker, which includes any portion of the order that is automatically executed through an Exchange system; (2) that is automatically cancelled; or (3) that is not executed, and not cancelled. The Exchange believes that the prohibition on charging floor brokerage commissions under the aforementioned order scenarios is appropriate simply because the DPM does not handle or perform any agency function for such orders.

Finally, the proposed rule change also proposes to make a technical clarification to current CBOE Rule 8.85(b)(iv), which is related to this filing and which prohibits a DPM from charging a brokerage commission for the portion of any order in which the DPM acts as both principal and agent. This proposal would add the term ''portion'' to the rule text to clarify that a DPM can charge a brokerage commission for the part of any order that it has not executed as principal, but did act as executing

broker in the execution of that order. The Exchange believes that this is the current practice on the Exchange and in the industry.

2. Statutory Basis

The Exchange believes that restricting a DPM from unnecessarily charging brokerage commission for agency orders will benefit both investors and will preserve the competitiveness of the Exchange. The Exchange believes that the proposed rule change is consistent with section 6(b) of the Act [3] in general and furthers the objectives of section 6(b)(5) of the Act [4] in particular in that it is designed to promote just and equitable principles of trade, to remove impediments to and perfect the mechanism of a free and open market, and to protect investors and the public interest.

B. Self-Regulatory Organization's Statement on Burden on Competition

The Exchange believes that the proposed rule change does not impose any burden on competition that is not necessary or appropriate in furtherance of the purposes of the Act.

C. Self-Regulatory Organization's Statement on Comments on the Proposed Rule Change Received From Members, Participants or Others

No written comments were solicited or received with respect to the proposed rule change.

III. Date of Effectiveness of the Proposed Rule Change and Timing for Commission Action

Within 35 days of the date of publication of this notice in the **Federal Register** or within such longer period (i) as the Commission may designate up to 90 days of such date if it finds such longer period to be appropriate and publishes its reasons for so finding or (ii) as to which the Exchange consents, the Commission will:

A. By order approve such proposed rule change, or

B. Institute proceedings to determine whether the proposed rule change should be disapproved.

IV. Solicitation of Comments

Interested persons are invited to submit written data, views, and arguments concerning the foregoing, including whether the proposed rule change is consistent with the Act. Comments may be submitted by any of the following methods:

Electronic Comments

- Use the Commission's Internet comment form (*http://www.sec.gov/rules/sro.shtml*); or
- Send an e-mail to *rule-comments@sec.gov.* Please include File Number SR–CBOE–2004–73 on the subject line.

Paper Comments

- Send paper comments in triplicate to Jonathan G. Katz, Secretary, Securities and Exchange Commission, 450 Fifth Street, NW., Washington, DC 20549–0609.

All submissions should refer to File Number SR–CBOE–2004–73. This file number should be included on the subject line if e-mail is used. To help the Commission process and review your comments more efficiently, please use only one method. The Commission will post all comments on the Commission's Internet Web site (*http://www.sec.gov/rules/sro.shtml*). Copies of the submission, all subsequent amendments, all written statements with respect to the proposed rule change that are filed with the Commission, and all written communications relating to the proposed rule change between the Commission and any person, other than those that may be withheld from the public in accordance with the provisions of 5 U.S.C. 552, will be available for inspection and copying in the Commission's Public Reference Section, 450 Fifth Street, NW., Washington, DC 20549. Copies of such filing also will be available for inspection and copying at the principal office of the CBOE. All comments received will be posted without change; the Commission does not edit personal identifying information from submissions.

You should submit only information that you wish to make available publicly. All submissions should refer to File Number SR–CBOE–2004–73 and should be submitted on or before January 5, 2005.

For the Commission, by the Division of Market Regulation, pursuant to delegated authority.[5]

J. Lynn Taylor,

Assistant Secretary.

[FR Doc. E4–3649 Filed 12–14–04; 8:45 am]

BILLING CODE 8010–01–P

[3] 15 U.S.C. 78f(b).

[4] 15 U.S.C. 78f(b)(5).

[5] 17 CFR 200.30–3(a)(12).

SECURITIES AND EXCHANGE COMMISSION

[Release No. 34–50819; File No. SR–ISE–2003–06]

Self-Regulatory Organizations; Order Granting Approval of Proposed Rule Change and Amendment No. 1 Thereto and Notice of Filing and Order Granting Accelerated Approval to Amendments No. 2 and 3 Thereto by the International Securities Exchange, Inc. To Establish Rules Implementing a Price Improvement Mechanism

December 8, 2004.

I. Introduction

On February 25, 2003, the International Securities Exchange, Inc. (''ISE'' or ''Exchange'') filed with the Securities and Exchange Commission (''Commission''), pursuant to section 19(b)(1) of the Securities Exchange Act of 1934 (''Act''),[1] and Rule 19b–4 thereunder,[2] a proposed rule change to establish rules implementing a Price Improvement Mechanism (''PIM''). On February 25, 2004, the ISE submitted Amendment No. 1 to the proposed rule change.[3] The proposed rule change, as amended, was published for comment in the **Federal Register** on March 3, 2004.[4] The Commission received one comment letter with respect to the proposal and Amendment No. 1.[5] On June 24, 2004, the ISE filed Amendment No. 2 to the proposed rule change,[6] and a written response to the Comment Letter.[7] On October 28, 2004, the ISE

[1] 15 U.S.C. 78s(b)(1).

[2] 17 CFR 240.19b–4.

[3] *See* Letter from Michael Simon, Senior Vice President and General Counsel, ISE, to Nancy Sanow, Assistant Director, Division of Market Regulation (''Division''), Commission, dated February 24, 2004 (''Amendment No. 1''). In Amendment No. 1, the ISE replaced the proposed rule text in its entirety.

[4] *See* Securities Exchange Act Release No. 49323 (February 26, 2004), 69 FR 10087 (''Notice'').

[5] *See* Letter from Kenneth R. Leibler, Chairman and Chief Executive Officer, Boston Stock Exchange, Inc. (''BSE'') to Jonathan G. Katz, Secretary, Securities and Exchange Commission, dated March 24, 2004 (''Comment Letter''). A discussion of the Comment Letter is provided below in Section IV, Discussion and Commission Findings.

[6] *See* Letter from Michael Simon, Senior Vice President and General Counsel, ISE, to Nancy J. Sanow, Assistant Director, Division, Commission, dated June 23, 2004 (''Amendment No. 2''). As noted below, in Amendment No. 2, the ISE proposes to clarify its rules to address issues raised by the Comment Letter and Commission staff.

[7] *See* Letter from Michael J. Simon, Senior Vice President and General Counsel, ISE, to Jonathan G. Katz, Secretary, Commission, dated June 23, 2004 (''Response Letter'').

filed Amendment No. 3 to the proposed rule change.[8]

This order approves the proposed rule change, as amended by Amendment No. 1, publishes notice of Amendments No. 2 and 3 to the proposed rule change, and grants accelerated approval of Amendments No. 2 and 3.

II. Description of the Proposal

The ISE proposes to establish an auction, known as the PIM, that would allow an ISE Electronic Access Member (''EAM'') to enter matched trades (''Crossing Transactions''). A Crossing Transaction would be comprised of an order that the EAM represents as agent (''Agency Order'') and an order that is executable against the Agency Order for the full size of the Agency Order (the ''Counter-Side Order'').[9] A Member must enter the Crossing Transaction at a price at least one cent better than the national best bid and offer (''NBBO'').[10]

The ISE would broadcast the Crossing Transaction to all ISE Members.[11] During a three-second auction, all ISE Members could enter ''Improvement Orders,'' in penny increments, to improve the price of the Agency Order.[12] Improvement Orders may be for the account of a Public Customer or for the Member's own account.[13] During the exposure period, the aggregate size of the best prices, including the Counter-Side Order, Improvement Orders, and any change to either, would continually be updated and broadcast to all Members.[14]

After three seconds, the ISE would execute the Agency Order against the best prices as follows: (1) All Public Customer Improvement Orders and unrelated Public Customer orders on the book at the best price would be executed first; (2) all unrelated agency orders on the book for the account of a non-Member broker-dealer would then be executed; (3) if the entering EAM is at the best price, it would then execute against the greater of one contract or 40 percent of the Agency Order; and (4) the remainder of the order would be allocated to all other interest, which includes Improvement Orders and unrelated orders on the book for the account of an ISE Member (including ISE market makers), at the best price based on size.[15]

The PIM exposure period would be terminated immediately, prior to the expiration of the three-second exposure period, upon the receipt of certain orders in the regular Exchange market (''unrelated orders''). Specifically, the PIM would terminate when a market or marketable limit order is received in the same series [16] or when a non-marketable limit order on the same side of the market as the Agency Order is received that would cause the price of the Crossing Transaction to be outside of the best bid or offer on the Exchange.[17]

Under proposed ISE Rule 723(d)(5), as originally proposed and published in the Notice, in the case where an unrelated market or marketable limit order on the opposite side of the market from the Agency Order is received, the order would execute against the Agency Order at a price that is mid-way between the best Counter-Side interest and the bid or offer on the Exchange.[18] The Exchange proposes to change this provision to state that when a market order or marketable limit order on the opposite side of the market from the Agency Order ends the exposure period, it would participate in the execution of the Agency Order at the price that is mid-way between the best Counter-Side interest and the NBBO, so that both the unrelated order and the Agency Order receive price improvement.[19]

When a market order or marketable limit order on the same side of the market from the Agency Order ends the exposure period, the unrelated order would execute against any unexecuted interest in the PIM after the Agency Order is executed in full to provide the unrelated order with the opportunity for price improvement.[20] In Amendment No. 2, the ISE proposes to clarify that in such instances, executions in the PIM would be handled such that at a given price, Public Customer interest is executed in full before any non-Customer interest.[21] After Public Customer interest at a given price, agency orders for the account of non-Member broker-dealers would be executed in full before any proprietary interest of Members.[22] Finally, Member proprietary interest would participate in the execution of the Agency Order upon the percentage of the total number of contracts available at the price that is represented by the size of the non-Customer's interest.[23] In Amendment No. 2, the Exchange also proposes to clarify that when an unrelated order on the same side of the market from the Agency Order ends the exposure period, and the Counter-Side Order is at the same price as Member interest, the Counter-Side Order would not be allocated the greater of one contract or forty percent of the initial size of the Agency Order before other Member interest is executed.[24]

As originally proposed, Supplementary Material .01 to proposed ISE Rule 723 provided that it would be considered conduct inconsistent with just and equitable principles of trade for any Member to enter orders, quotes, Agency Orders, Counter-Side Orders or Improvement Orders for the purpose of disrupting or manipulating the PIM. In Amendment No. 2, the ISE proposes to clarify that such conduct would include, but not be limited to, engaging in a pattern of conduct where the Member submitting an Agency Order into the PIM breaks up the Agency Order into separate orders for two or fewer contracts for the purpose of gaining a higher allocation percentage than the Member would have otherwise received in accordance with the allocation procedures established for the situation in which

[8] *See* Letter from Michael Simon, Senior Vice President and General Counsel, ISE, to Nancy J. Sanow, Assistant Director, Division, Commission, dated October 14, 2004 (''Amendment No. 3''). In Amendment No. 3, the ISE proposed to add new Supplemental Material .06 to proposed ISE Rule 723, to clarify that paragraphs (c)(5), (d)(5), and (d)(6) of ISE Rule 723 will be effective for a pilot period expiring on July 18, 2005. Supplemental Material .06 to proposed ISE Rule 723 also would state that during the pilot period, the Exchange will submit certain data on a confidential basis relating to the frequency with which the exposure period is terminated by unrelated orders.

[9] *See* proposed ISE Rule 723(b). The Counter-Side Order may represent interest for the EAM's own account, or interest the EAM has solicited from one or more other parties, or a combination of both. *See* Amendment No. 2, *supra* note 6.

[10] *See* proposed ISE Rule 723(b)(1). A PIM could not be initiated unless there are at least three ISE Market Makers quoting in the series. Moreover, there could be only one PIM ongoing in a series at any given time. Therefore, a PIM could not be initiated during an ongoing PIM in the same series. *See* proposed ISE Rule 723, Supplementary Material .04.

[11] The broadcast message would include the series, price, and size of the Agency Order and whether it is to buy or sell. *See* proposed ISE Rule 723(c); *see also* Amendment No. 2, *supra* note 6.

[12] *See* proposed ISE Rule 723(c)(1). The ISE would broadcast Improvement Orders to all Members. Crossing Transactions and Improvement Orders would not be displayed in the ISE BBO and would not be disseminated to the Options Price Reporting Authority.

[13] *See* proposed ISE Rule 723(c)(2).

[14] *See* proposed ISE Rule 723(c)(4); *see also* Amendment No. 2, *supra* note 6.

[15] *See* proposed ISE Rule 723(d). This sized-based allocation formula for the remainder of the order would be the same formula the Exchange applies in its regular market, without any special allocation rights for the ISE Primary Market Maker. *See* ISE Rule 713, Supplementary Material .01.

[16] *See* proposed ISE Rule 723(c)(5).

[17] *Id.* Under such circumstances: (1) the PIM would be concluded; (2) the Agency Order executed; and (3) the non-marketable limit order would be displayed on the ISE book.

[18] *See* Amendment No. 1, *supra* note 3.

[19] *See* proposed ISE Rule 723(d)(5); *see also* Amendment No. 2, *supra* note 6.

[20] *See* proposed ISE Rule 723(d)(6); *see also* Amendment No. 2, *supra* note 6.

[21] *Id.*

[22] *Id.*

[23] *Id.*

[24] *Id.*

the Counter-Side Order is at the same price as Member interest.[25] Also, the ISE proposes to clarify that ISE Rule 717(f), which places limitations on electronic orders, would not apply to transactions executed pursuant to ISE Rule 723.[26]

Finally, the ISE proposes in Amendment No. 2 to amend the text of ISE Rule 400 regarding solicited orders. The proposed addition to ISE Rule 400 would clarify that nothing in the Supplementary Material .01 to ISE Rule 400 is intended to prohibit a member from soliciting interest to execute against an order it represents as agent, the execution of which is governed by ISE Rule 717(e) (Solicitation Orders), and Supplementary Material .02 to ISE Rule 717.

In Amendment No. 3, the ISE proposes new Supplemental Material .06 to proposed ISE Rule 723 to establish that paragraphs (c)(5), (d)(5), and (d)(6) of ISE Rule 723 would be effective for a pilot period expiring on July 18, 2005.[27] The ISE also proposes in new Supplemental Material .06 that the Exchange would submit data relating to the frequency with which the exposure period is terminated by unrelated orders.[28]

III. Solicitation of Comments

Interested persons are invited to submit written data, views, and arguments concerning Amendments No. 2 and 3, including whether Amendments No. 2 and 3 are consistent with the Act. Comments may be submitted by any of the following methods:

Electronic Comments

- Use the Commission's Internet comment form (*http://www.sec.gov/rules/sro.shtml*); or
- Send e-mail to *rule-comments@sec.gov.* Please include File Number SR-ISE–2003–06 on the subject line.

Paper Comments

- Send paper comments in triplicate to Jonathan G. Katz, Secretary, Securities and Exchange Commission, 450 Fifth Street, NW., Washington, DC 20549–0609.

All submissions should refer to File Number SR-ISE–2003–06. This file number should be included on the subject line if e-mail is used. To help the Commission process and review your comments more efficiently, please use only one method. The Commission will post all comments on the Commission's Internet Web site (*http://www.sec.gov/rules/sro.shtml*). Copies of the submission, all subsequent amendments, all written statements with respect to the proposed rule change that are filed with the Commission, and all written communications relating to the proposed rule change between the Commission and any person, other than those that may be withheld from the public in accordance with the provisions of 5 U.S.C. 552, will be available for inspection and copying in the Commission's Public Reference Section, 450 Fifth Street, NW., Washington, DC 20549. Copies of such filing also will be available for inspection and copying at the principal office of the ISE. All comments received will be posted without change; the Commission does not edit personal identifying information from submissions. You should submit only information that you wish to make available publicly. All submissions should refer to File Number SR–ISE–2003–06 and should be submitted on or before January 5, 2005.

IV. Discussion and Commission Findings

After careful review of the amended proposal and consideration of the Comment Letter and Response Letter, the Commission finds that the proposed rule change to establish rules for the implementation of the ISE PIM is consistent with the requirements of the Act and the rules and regulations thereunder applicable to a national securities exchange[29] and, in particular, the requirements of section 6 of the Act.[30] Specifically, as discussed in greater detail below, the Commission finds that the proposal is consistent with section 6(b)(5) of the Act,[31] which requires, in part, that the rules of an exchange be designed to prevent fraudulent and manipulative acts and practices; to promote just and equitable principles of trade; to foster cooperation and coordination with persons engaged in regulating, clearing, settling, and processing information with respect to, and facilitating transactions in securities; to remove impediments to and perfect the mechanism of a free and open market and a national market system; and, in general, to protect investors and the public interest. Section 6(b)(5) also requires that the rules of an exchange not be designed to permit unfair discrimination among customers, issuers, brokers, or dealers.

Specifically, the Commission believes that approving the ISE's proposal to establish the PIM should confer important benefits to the public by increasing competition between and among the options exchanges, resulting in better prices and executions for investors. The Comment Letter argues that because the ISE market structure does not include many of the elements of the Boston Options Exchange (''BOX'') market structure, the ISE PIM lacks basic customer protections and will discourage price competition and aggressive bidding.[32] The Commission does not agree with these objections, and notes that market structures need not be identical to be consistent with the Act; in fact, such a policy would likely result in less competition between markets and fewer innovations.

The Commission believes that the proposed ISE PIM provides limitations on internalization comparable to the other exchanges' rules that guarantee members the right to internalize their customers' orders. In particular, as discussed below, the ISE's proposal would require an EAM seeking to utilize the PIM to expose its Customer Order before trading with that order and would further require a minimum of three ISE market makers to be quoting in a particular series before a PIM could be initiated. The Commission also believes that the access to the PIM for those who may wish to compete for an Agency Order should be sufficient to provide opportunities for a meaningful, competitive auction.

The Commission therefore finds that, for the reasons discussed more fully below, the ISE's proposal is consistent with the Act.

A. Need for Both PIM and ISE Facilitation Mechanism

In the Comment Letter, BSE argues that the ISE should have only one facilitation process in its system.[33] The Comment Letter notes that ISE Rule 716(d) currently provides for a facilitation mechanism (''ISE Facilitation Mechanism'') by which an EAM can facilitate block-size[34] Public Customer orders. According to the Comment Letter, the election of a PIM

[25] *See* proposed ISE Rule 723, Supplementary Material .01; *see also* Amendment No. 2, *supra* note 6.

[26] *See* proposed ISE Rule 723, Supplementary Material .05; *see also* Amendment No. 2, *supra* note 6.

[27] *See* proposed ISE Rule 723, Supplementary Material .06; *see also* Amendment No. 3, *supra* note 8.

[28] *Id.*

[29] In approving this proposal, the Commission has considered the proposed rule's impact on efficiency, competition, and capital formation. 15 U.S.C. 78c(f).

[30] 15 U.S.C. 78f.

[31] 15 U.S.C. 78f(b)(5).

[32] *See* Comment Letter, *supra* note 5, at pp. 1–6.

[33] *See* Comment Letter, *supra* note 5, at p. 11.

[34] ''Block''-size is defined under the ISE Rules as orders for at least 50 contracts. *See* ISE Rule 716(a).

by an EAM to facilitate a Customer Order would always be better for the Customer than the election of the ISE Facilitation Mechanism, whereas the election of the ISE Facilitation Mechanism would always be better for the EAM than the election of the PIM. The Comment Letter maintains that for orders of over 50 contracts, EAMs would have an incentive to seek first to facilitate an order through the ISE Facilitation Mechanism and, if it appeared that the EAM would lose its guaranteed allocation, the EAM would cancel the facilitation order and elect the PIM.

The Commission does not agree with the Comment Letter's assertions for several reasons. First, the ISE rules specifically provide that it would be a violation of an ISE Member's duty of best execution to its Customer if the Member were to cancel a facilitation order to avoid execution of the order at a better price.[35] Therefore, the BSE's argument that an EAM could exploit the availability of both the Facilitation Mechanism and the PIM by simply canceling its facilitation order after it has been entered into the ISE Facilitation Mechanism to avoid losing its allocation guarantee is not accurate, as such conduct would be a violation of Exchange rules.

Second, the Commission notes that ISE Members have an obligation of best execution with respect to their Customer Orders. The Commission has long held the view that in satisfying its duty of best execution,[36] which requires a broker to seek the most favorable terms reasonably available under the circumstances for a customer's transaction, a broker must periodically assess the quality of competing markets to assure that order flow is directed to markets providing the most beneficial terms for their customers' orders.[37] The Commission believes that this obligation would require an EAM to evaluate whether the PIM or Facilitation Mechanism would provide better execution to customers' orders.

B. Three Market Maker Requirement

Proposed ISE Rule 723 would require that there be at least three Market Makers quoting in a relevant series at the time an EAM submits its Crossing Transaction into the PIM.[38] The Commission believes that this requirement will improve the opportunity for an Agency Order to be exposed to a competitive auction.[39]

C. Solicitation Process

The ISE's proposal would permit an ISE EAM to solicit interest from other parties to participate in the Counter-Side Order in the PIM.[40] In its Comment Letter, BSE argues that it is unclear whether ISE market makers may be solicited to participate in the Counter-Side Order.[41] The Commission notes, however, that an EAM would be prohibited from soliciting an order from an ISE Market Maker, pursuant to ISE Rule 717(g).[42] Furthermore, the Commission emphasizes that a blanket exemption from ISE Rule 717(g) would not be permitted without Commission approval of a proposed rule change submitted by the Exchange under section 19(b) of the Act.[43]

D. Three-Second PIM

1. Content of Broadcast Message

Under the ISE proposal, upon entry of a Crossing Transaction into the PIM, a broadcast message would be sent to all ISE members to begin the exposure period. The BSE suggests that the only information provided to ISE members in the PIM broadcast would be the aggregate size of the best-priced Improvement Orders (not improved Counter-Side Orders) and that this would be insufficient information for market participants to make fully-informed decisions about how to compete for the Agency Order.[44] In response to the Comment Letter, the ISE proposes in Amendment No. 2 to clarify that the broadcast message would include the series, price, and size of the Agency Order, and whether the Agency Order is a buy or sell order. The ISE also proposes to clarify that during the exposure period, the aggregate size of the best prices, (including the Counter-Side Order, Improvement Orders, and any changes to either) would continually be updated and broadcast to all ISE Members.[45]

The Commission believes that the proposed content of the broadcast message at the initiation of the PIM should provide sufficient information to permit interested market participants to participate in the auction. In addition, the Commission does not believe that it is necessary for the ISE to provide information about prices and sizes below the best price.

2. Duration of the PIM

The ISE proposes that the duration of each PIM be three seconds.[46] The Commission believes that a three-second PIM should afford electronic crowds sufficient time to compete for Agency Orders submitted by an EAM. In reaching this conclusion, the Commission believes that the timeframes necessary for exposure and execution of orders be adjudged in light of the ISE's market structure. The Commission reiterates that the critical issue is determining whether the proposed three-second timeframe gives participants in a fully automated marketplace sufficient time to respond to a PIM broadcast to compete and provide price improvement for Agency Orders and whether electronic systems are available to ISE members that would allow them to respond to PIM broadcasts in a meaningful way within the proposed timeframe.[47] The Commission notes that the ISE is a fully electronic exchange where crowd members interact by electronic means. The Commission also notes that electronic systems are readily available to ISE members—if not already in place—to allow them to respond to PIM broadcasts.[48]

3. Premature Termination of the PIM

As proposed, the PIM would end prematurely under certain circumstances:[49] (1) Upon the receipt of a market or marketable limit order on

[35] *See* ISE Rule 716, Supplementary Material .01.

[36] A broker-dealer's duty of best execution derives from common law agency principals and fiduciary obligations and is incorporated both in the rules of the self-regulatory organization, and through judicial and Commission decisions, in the antifraud provisions of the federal securities laws. *See* Securities Exchange Act Release No. 37619A (September 6, 1996), 61 FR 48290 (September 12, 1996) (''Order Handling Rules Release''), note 348 and accompanying text.

[37] *See id.*

[38] *See* proposed ISE Rule 723(b)(1); *see also* BOX Rules Chapter V, Sec. 18(e).

[39] *See* Securities Exchange Act Release No. 49068 (January 13, 2004), 69 FR 2775 (January 20, 2004) (Order approving the BOX as an options trading facility of the BOX).

[40] *See* proposed ISE Rule 723(a).

[41] *See* Comment Letter, *supra* note 5.

[42] ISE Rule 717(g) prohibits an EAM from causing the entry of orders for the account of an ISE Market Maker.

[43] 15 U.S.C. 78s(b).

[44] *See* Comment Letter, *supra* note 5, at pp. 11–15.

[45] *See* Amendment No. 2, *supra* note 6; *see also* proposed ISE Rule 723(c)(4).

[46] The PIM would end prior to the expiration of the three-second exposure period under certain circumstances. *See* proposed ISE Rule 723(c)(5). *See also infra* notes 49–57 and accompanying text for a more detailed discussion.

[47] *See supra* note 40.

[48] The Commission notes that the ISE offers a facilitation mechanism through which an EAM can facilitate Public Customer orders of 50 contracts or more. The ISE facilitation mechanism currently employs an exposure period of ten seconds. *See* ISE Rule 716(d) and Supplemental Material .02 to ISE Rule 716.

[49] With respect to the same series, no PIM will run simultaneously with another PIM, nor will PIMs be permitted to queue or overlap in any manner. *See* proposed ISE Rule 723, Supplementary Material .04.

the Exchange in the same series on the opposite side of the market from the Agency Order;[50] (2) upon the receipt of a market or marketable limit order on the Exchange in the same series on the same side of the market as the Agency Order;[51] (3) upon the receipt of a non-marketable limit order in the same series on the same side of the market as the Agency Order that would cause the price of the Crossing Transaction to be outside of the best bid or offer on the Exchange.[52]

The ISE's proposal would provide these unrelated orders with the opportunity for price improvement.[53] The Commission, however, is concerned that this could result in an Agency Order being disadvantaged by the premature conclusion of a PIM, in that it would not have received the full three second auction exposure period in which to receive price improvement.[54]

The Commission notes that proposed ISE Rule 723, Supplementary Material .01 states that it would be considered conduct inconsistent with just and equitable principles of trade for any ISE Member to enter orders, quotes, Agency Orders, Counter-Side Orders, or Improvement Orders for the purposes of disrupting or manipulating the PIM.[55] The Commission believes that this proposed rule should help to address its concern, because ISE Members would be prohibited from deliberately entering unrelated orders in the ISE system to end the PIM prematurely to disrupt or manipulate it.[56]

Moreover, the ISE has proposed that those portions of proposed ISE Rule 723 relating to the premature termination of the PIM be effective on a pilot basis. The Commission believes that approval of these provisions on a pilot basis is appropriate and will afford both the Exchange and the Commission an opportunity to analyze the impact of unrelated orders on the PIM, as well as the ISE's surveillance procedures with respect to the PIM.[57]

E. Competition in the PIM

Under the ISE's proposal, all ISE Members would be permitted to participate in a PIM.[58] Improvement Orders entered by ISE members may be for their own account or for the account of a Public Customer.[59] In addition, unrelated orders could compete in standard increments to trade with the Agency Order in the PIM. Such unrelated orders could include agency orders on behalf of Public Customers, market makers on other exchanges, and non-ISE member broker-dealers, as well as non-Improvement orders submitted by ISE members.

The BSE questions how Improvement Orders from Public Customers would be handled by an EAM.[60] In its Response Letter, the ISE clarifies that Public Customer orders would be handled as provided under the current ISE Rules. Specifically, there would be no limitations on the ability of Public Customers to participate in the PIM, and ISE members may represent Public Customers in a PIM under any type of instruction they wish to accept without restriction.[61] The Commission believes that the lack of restrictions on the participation of Public Customers in the PIM should increase the opportunity for them to participate in the PIM.

The BSE also argues that under ISE Rule 717, which prohibits customers from creating and transmitting orders electronically unless such orders are non-marketable limit orders to buy (sell) that are priced higher (lower) than the best ISE bid or offer, Public Customers would not be permitted to participate in the PIM.[62] In response, the ISE, in Amendment No. 2, proposes that ISE Rule 717(f) would not apply to transactions executed pursuant to proposed ISE Rule 723.[63] The Commission believes that Amendment No. 2 sufficiently clarifies the application of ISE Rule 717.

Finally, the BSE argues that a lack of time priority would discourage price competition in the PIM.[64] The Commission disagrees with this assertion and, instead, continues to believe that allocations based on price/size priority are consistent with the Act.[65]

F. Improvement Orders

As discussed above, during the PIM, ISE members may submit Improvement Orders. Improvement Orders would be submitted in penny increments and would be valid only in the PIM process. The BSE asks whether an ISE Member that submits an Improvement Order may reduce the size of the Improvement Order at the same price.[66] In its Response Letter, the ISE notes that its proposed rules provide that an Improvement Order may be modified only to increase the size at the same price, or improve the price of the Improvement Order for any size up to the size of the Agency Order.[67] The Commission believes that the proposed ISE rules make clear that ISE Members would not be permitted to reduce the size of an Improvement Order without improving its price.

G. PIM Trade Allocation

With multiple trading of options, individual options markets are under significant pressure to attract or retain business. One approach to increasing business on an exchange is to allow members a preference in trading with customer orders that they bring to the exchange. The Commission, however, has expressed its concern that proposals by options exchanges that guarantee a significant portion of orders to any market participant could erode the incentive to display aggressively priced quotes.[68] Thus, the Commission must weigh whether the proposed

[50] *See* proposed ISE Rule 723(c)(5)(ii).

[51] *Id.*

[52] *See* proposed ISE Rule 723(c)(5)(iii).

[53] *See supra* notes 16–23 and accompanying text.

[54] The Commission notes that under the BOX rules, the BOX Price Improvement Period (''PIP'') auction can be terminated prior to the three-second period only in cases where an executable unrelated order is submitted to BOX on the same side as the customer order that was initially entered into the PIP. *See* BOX Rules, Chapter V, Section 18(i). The BOX rules, unlike the ISE proposal, do not permit the unrelated order to be executed against unexecuted interest in the PIP after the facilitated customer order is executed in full.

[55] *See* proposed ISE Rule 723, Supplementary Material .01. *See also* Amendment No. 2, *supra* note 6.

[56] In addition, the ISE has provided Commission staff with details regarding its proposed PIM surveillance procedures. *See* Letter to Nancy Sanow, Assistant Director, Division, Commission, from Michael J. Simon, Senior Vice President & General Counsel, ISE, dated October 14, 2004. The Commission notes that as a matter of Commission policy, surveillance programs and procedures are generally kept confidential. Disclosure of specific surveillance procedures could provide market participants with information that could aid attempts at avoiding regulatory detection of inappropriate trading activity.

[57] The ISE's surveillance plan and procedures are subject to inspection by the Commission, to ensure that the ISE adequately monitors its market and its members, and enforces its rules and the federal securities laws, including the anti-fraud provisions.

[58] *See* proposed ISE Rule 723(c).

[59] *Id.*

[60] *See* Comment Letter, *supra* note 5, at p. 16.

[61] *See* Response Letter, *supra* note 7, at pp. 4–5.

[62] *See* Comment Letter, *supra* note 5, at p. 19.

[63] *See* Amendment No. 2, *supra* note 6. *See also* proposed ISE Rule 723, Supplementary Material .05. In its Response Letter, the ISE stated that ISE Rule 717(f) was not intended to be applied to orders entered into the PIM. *See* Response Letter, *supra* note 7, at p. 5.

[64] *See* Comment Letter, *supra* note 5, at pp. 6–8.

[65] *See* Securities Exchange Act Release Nos. 47959 (May 30, 2003), 68 FR 34441 (June 9, 2003) (Order approving the CBOE Hybrid System where, pursuant to CBOE Rule 6.45A, the applicable floor procedure committee could determine to weight the allocation algorithm so that the entire allocation would be based on size pro rata); and 46514 (September 18, 2002), 67 FR 60267 (September 25, 2002) (Order approving ISE proposal relating to the allocation of customer orders on a price/size priority basis).

[66] *See* Comment Letter, *supra* note 5, at p. 16.

[67] *See* Response Letter, *supra* note 7 p. 5; *see also* proposed ISE Rule 723(c)(3).

[68] *See, e.g.*, Securities Exchange Act Release No. 43100 (July 31, 2000), 65 FR 48778 (August 9, 2000).

participation right would so substantially reduce the ability of other market participants to trade with an order that it would reduce price competition. As the Commission has noted previously:

> It is difficult to assess the precise level at which guarantees may begin to erode competitive market maker participation and potential price competition within a given market. In the future, after the Commission has studied the impact of guarantees, the Commission may need to reassess the level of these guarantees. For the immediate term, the Commission believes that 40% is not clearly inconsistent with the statutory standards of competition and free and open markets.[69]

The ISE PIM proposal would provide that at the conclusion of the PIM exposure period, the Agency Order would be executed in full against the best-priced orders, including orders and quotes in the Exchange market, Improvement Orders, and the Counter-Side Order.[70] The ISE would execute the Agency Order against the best prices as follows: (1) All Public Customer Improvement Orders and unrelated Public Customer orders on the book at the best price would be executed first; (2) all unrelated agency orders on the book for the Account of a non-Member broker-dealer would then be executed; (3) if the Counter-Side Order is at the best price, it would then be executed against the greater of one contract or 40% percent of the Agency Order; and (4) the remainder of the order would be allocated to all other interest, which includes Improvement Orders and unrelated orders on the book for the account of an ISE Member (including ISE market makers), at the best price pro-rata based on size.[71]

The BSE argues that the ISE's proposal to allow a 40% guarantee to the Counter-Side Order based on the size of the original order is inconsistent with facilitation rules for BOX's PIP auction.[72] However, the Commission believes that the ISE's proposal, which entitles (subject to certain exceptions) an EAM who submits the Counter-Side Order to 40% of the Agency Order, is not inconsistent with the Act. In addition, the Commission notes that the guarantee for the EAM bringing an Agency Order to the PIM is consistent with the facilitation guarantees in place at other options exchanges.[73]

The Commission believes that the ISE PIM proposal should promote price competition within the PIM by providing ISE Members with a reasonable opportunity to compete for a significant percentage of the incoming order and, therefore, should protect investors and the public interest. The Commission continues to believe that a 40% allocation is consistent with the statutory standards for competition and free and open markets.

On a related note, the BSE points out that the proposal does not describe the order of priority among the excess Improvement Orders in the situation where an unrelated marketable order on the same side of the market as the Agency Order terminates the PIM.[74] In response, the ISE proposes in Amendment No. 2 to clarify that these executions would follow the same execution priority rules described in proposed ISE Rule 723(d)(1)-(4).

H. Section 11(a) of the Act

Section 11(a) of the Exchange Act[75] prohibits a member of a national securities exchange from effecting transactions on that exchange for its own account, the account of an associated person, or an account over which it or its associated person exercises discretion (collectively, ''covered accounts'') unless an exception applies. Section 11(a)(1)(G)[76] and Rule 11a1–1(T)[77] under the Act provide an exception to the general prohibition in Section 11(a) on an exchange member effecting transactions for its own account. Specifically, a member that ''is primarily engaged in the business of underwriting and distributing securities issued by other persons, selling securities to customers, and acting as broker, or any one or more of such activities, and whose gross income normally is derived principally from such business and related activities''[78] and effects a transaction in compliance with the requirements in Rule 11a1–1(T)(a)[79] may effect a transaction for its own account. Among other things, Rule 11a1–1(T)(a) requires that an exchange member presenting a bid or offer for its own account or the account of another member shall grant priority to any bid or offer at the same price for the account of a non-member of the exchange.[80] Because proposed ISE Rule 723 would require EAMs and Exchange Market Makers to yield priority in the PIM to all non-Member orders, the Commission believes that the proposal is consistent with the requirements in section 11(a) and Rule 11a1–1(T) under the Act.

Under the proposal, Public Customer interest in the PIM would be executed in full before orders for the account of non-Member broker-dealers could be executed. The BSE argues that section 11(a) does not require Public Customers to be treated preferentially to other non-Members.[81] The Commission notes, however, that section 11(a)(1)(G) of the Act and the rules thereunder do not prohibit Public Customers from being treated preferentially relative to other non-Members. Instead, the statute and the rules require only that non-Member orders receive priority over Member orders. Under the ISE's proposed rules, Public Customer and non-Member broker-dealer orders would receive first priority. Therefore, the Commission believes that the proposed ISE PIM priority execution rules would comply with section 11(a) of the Act.[82]

I. Quote Rule

The BSE argues that the proposed ISE PIM rules violate Rule 11Ac1–1 under the Act (the ''Quote Rule''),[83] because inbound unrelated market or marketable limit orders on the same side of the market as the Agency Order would be permitted to execute against any unexecuted interest in the PIM after the Agency Order is executed in full on a pilot basis until July 18, 2005.[84] In response, the ISE has requested an exemption from the Quote Rule for unexecuted interest in the PIM auction after the Agency Order has been executed in full.[85] Under separate cover,

[69] *See* Securities Exchange Act Release No. 42455 (February 24, 2000), 65 FR 11388 (March 2, 2000) (order approving registration of the ISE as a national securities exchange).

[70] *See* proposed ISE Rule 723(d).

[71] *See* proposed ISE Rule 723(d)(1)-(4).

[72] *See* Comment Letter, *supra* note 5, at p. 9. *See also* BOX Rules, Chapter V, Sec. 18 (f).

[73] *See* Securities Exchange Act Release No. 47628 (April 3, 2003), 68 FR 17697 (April 10, 2003) (approving proposal by the Chicago Board Options Exchange, Inc. to establish rules for CBOEdirect trading system). *See also* ISE Rule 716(d) (ISE Facilitation Mechanism).

[74] *See* Comment Letter, *supra* note 5, at p. 18.

[75] 15 U.S.C. 78k(a).

[76] 15 U.S.C. 78k(a)(1)(G).

[77] 17 CFR 240.11a1–1(T).

[78] 15 U.S.C. 78k(a)(1)(G)(i). Paragraph (b) of Rule 11a1–1(T) under the Act provides that a member shall be deemed to meet the requirements of Section 11(a)(1)(G)(i) of the Act if during its preceding fiscal year more than 50% of its gross revenues was derived from one or more of the sources specified in that section. In addition to any revenue which independently meets the requirements of Section 11(a)(1)(G)(i), revenue derived from any transaction specified in paragraph (A), (B), or (D) of Section 11(a)(1) of the Act or specified in Rule 11a1–4(T) shall be deemed to be revenue derived from one or more of the sources specified in Section 11(a)(1)(G)(i).

[79] 15 U.S.C. 78k(a)(1)(G)(ii).

[80] 17 CFR 240.11a1–1(T)(a)(3).

[81] *See* Comment Letter, *supra* note 5, at p. 19.

[82] 15 U.S.C. 78k(a).

[83] 17 CFR 240.11Ac1–1.

[84] *See* Comment Letter, *supra* note 5, at p. 19.

[85] *See* Letter from Michael J. Simon, Senior Vice President and General Counsel, ISE, to Annette

the Commission granted the ISE a limited exemption pursuant to paragraph (e) of the Quote Rule from its obligations under paragraph (b) of the Quote Rule that permits the Exchange to collect from its members the quotation sizes and aggregate quotation sizes communicated to the Exchange by responsible brokers or dealers with respect to Counter-Side Orders in connection with the PIM without making such quotation sizes available to quotation vendors.[86] The Commission believes that the exemption is consistent with the public interest, the protection of investors and the removal of impediments to and perfection of the mechanism of a national market system because it would permit the ISE to execute unrelated orders against trading interest priced better than the NBBO.[87]

J. Trade-Through Issues

As noted above, the PIM would automatically terminate under certain circumstances, including upon the receipt of a non-marketable limit order in the same series on the opposite side of the market as the Agency Order that would cause the price of the Crossing Transaction to be outside of the best bid or offer on the Exchange.[88] The BSE argues that the proposed PIM is inconsistent with the options intermarket linkage plan,[89] because a PIM execution could ''trade through'' [90] another exchange's market in such a case.[91] In Amendment No. 2, the ISE proposes to amend its proposal to state that when a market order or marketable limit order on the opposite side of the market from the Agency Order ends the exposure period, it would participate in the execution of the Agency Order at the price that is mid-way between the best counter-side interest and the NBBO.[92]

The Commission notes that all orders executed in the PIM are ''guaranteed'' at a better price than the NBBO at the initiation of the PIM. The Commission believes that the trade should be considered to have occurred at the time the order is guaranteed at a price at least a penny better than the NBBO. Accordingly, the Commission does not believe that it should be considered a trade-through if a trade is executed through the PIM at a price that is better than the NBBO at the commencement of the PIM, but because of a change in the NBBO—inferior to the NBBO at the conclusion of the PIM. Therefore, the Commission finds that ISE's proposed PIM is consistent with the Linkage Plan. The Commission reminds brokers, however, that they must always consider their best execution obligations.

K. No Minimum Size Requirement for PIM

One of the principal differences between the ISE's proposed PIM and most other exchanges' rules that guarantee members the right to trade with their customer orders is that the PIM would be available for orders of fewer than 50 contracts. Under the ISE's proposal, there would be no minimum size requirement for orders entered into the PIM, for a pilot period expiring on July 18, 2005.[93]

The Commission believes that the ISE's proposal may provide small customer orders with benefits not available under the rules of most other exchanges, and is consistent with the Act. In particular, any Agency Order entered into the PIM is guaranteed an execution at the end of the auction at a price at least a penny better than the NBBO. In addition, the Commission believes that the ISE's proposal provides the opportunity for more market participants to compete in its auction. For example, the ISE would permit all members and Public Customers to participate in the PIM.

The Commission will evaluate the PIM during the pilot period to determine whether it would be beneficial to customers and to the options market as a whole to approve any proposal requesting permanent approval to permit orders of fewer than 50 contracts to be submitted to the PIM. In addition, the Commission will examine the data submitted by the ISE with respect to situations in which the PIM is terminated prematurely by an unrelated order. To aid the Commission in its evaluation, the ISE represents that it will provide the following information each month:

(1) The number of orders of fewer than 50 contracts entered into the PIM;

(2) The percentage of all orders of fewer than 50 contracts sent to ISE that are entered into ISE's PIM;

(3) The percentage of all ISE trades represented by orders of fewer than 50 contracts;

(4) The percentage of all ISE trades effected through the PIM represented by orders of fewer than 50 contracts;

(5) The percentage of all contracts traded on ISE represented by orders of fewer than 50 contracts;

(6) The percentage of all contracts effected through the PIM represented by orders of fewer than 50 contracts;

(7) The spread in the option, at the time an order of fewer than 50 contracts is submitted to the PIM;

(8) Of PIM trades, the percentage done at the NBBO plus $.01, plus $.02, plus $.03, *etc.*;

(9) The number of orders submitted by EAMs when the spread was $.05, $.10, $.15, etc. For each spread, specify the percentage of contracts in orders of fewer than 50 contracts submitted to ISE's PIM that were traded by: (a) The EAM that submitted the order to the PIM; (b) ISE Market Makers assigned to the class; (c) other ISE members; (d) Public Customer Orders; and (e) unrelated orders (orders in standard increments entered during PIM);

(10) The number of times that a market or marketable limit order in the same series on the same side of the market as the Agency Order prematurely ended the PIM auction, and the number of times such orders were entered by the same (or affiliated) firm that initiated the PIM that was terminated;

(11) The percentage of PIM early terminations due to the receipt of a market or marketable limit order in the same series on the same side of the market that occurred within a ½ second of the start of the PIM auction; the percentage that occurred within one second of the start of the PIM auction; the percentage that occurred within one and ½ second of the start of the PIM auction; the percentage that occurred within 2 seconds of the start of the PIM auction; the percentage that occurred within 2 and ½ seconds of the PIM auction; and the average amount of price improvement provided to the Agency Order where the PIM is terminated early at each of these time periods;

(12) The number of times that a market or marketable limit order in the same series on the opposite side of the

Nazareth, Director, Division, Commission, dated November 15, 2004.

[86] *See* Letter from Robert L.D. Colby, Deputy Director, Division, Commission, to Michael J. Simon, Senior Vice President and General Counsel, ISE, dated December 8, 2004.

[87] *Id.*

[88] Under such circumstances, (1) the PIM would be concluded; (2) the Agency Order executed; and (3) the non-marketable limit order would be displayed on the ISE book.

[89] *See* Securities Exchange Act Release No. 43086 (July 28, 2000), 65 FR 48023 (August 4, 2000) (Order approving the Plan for the Purpose of Creating and Operating an Intermarket Option Linkage or ''Linkage Plan'').

[90] A trade-through means a transaction in an options series at a price that is inferior to the NBBO. *See* Linkage Plan, Section 2(29).

[91] *See* Comment Letter, *supra* note 5, at p. 18.

[92] *See* Response Letter, *supra* note 7, at p. 5; *see also* Amendment No. 2, *supra* note 6.

[93] The July 18, 2005, pilot expiration date corresponds to the expiration of a similar pilot program for the BOX's PIP, which provided that there is no minimum size requirement for orders entered into the PIP, encompassing a period of 18 months from commencement of the BOX. *See* BOX Rules, Chapter V, Sect. 18, Supplementary Material .01.

market as the Agency Order prematurely ended the PIM auction and at what time the unrelated order ended the PIM auction, and the number of times such orders were entered by the same (or affiliated) firm that initiated the PIM that was terminated;

(13) The percentage of PIM early terminations due to the receipt of a market or marketable limit order in the same series on the opposite side of the market that occurred within a ½ second of the start of the PIM auction; the percentage that occurred within one second of the start of the PIM auction; the percentage that occurred within one and ½ second of the start of the PIM auction; the percentage that occurred within 2 seconds of the start of the PIM auction; the percentage that occurred within 2 and ½ seconds of the PIM auction; and the average amount of price improvement provided to the Agency Order where the PIM is terminated early at each of these time periods;

(14) The number of times that a non-marketable limit order in the same series on the same side of the market as the Agency Order that would cause the price of the Crossing Transaction to be outside of the best bid or offer on the Exchange prematurely ended the PIM auction and at what time the unrelated order ended the PIM auction, and the number of times such orders were entered by the same (or affiliated) firm that initiated the PIM that was terminated;

(15) The percentage of PIM early terminations due to the receipt of a market or marketable limit order in the same series on the same side of the market as the Agency Order that would cause the price of the Crossing Transaction to be outside of the best bid or offer on the Exchange that occurred within a ½ second of the start of the PIM auction; the percentage that occurred within one second of the start of the PIM auction; the percentage that occurred within one and ½ second of the start of the PIM auction; the percentage that occurred within 2 seconds of the start of the PIM auction; the percentage that occurred within 2 and ½ seconds of the PIM auction; and the average amount of price improvement provided to the Agency Order where the PIM is terminated early at each of these time periods; and

(16) The average amount of price improvement provided to the Agency Order when the PIM auction is not terminated early (*i.e.*, runs the full three seconds).

VI. Accelerated Approval of Amendments No. 2 and 3

Pursuant to section 19(b)(2) of the Act,[94] the Commission may not approve any proposed rule change, or amendment thereto, prior to the 30th day after the date of publication of notice of the filing thereof, unless the Commission finds good cause for so doing and publishes its reasons for so finding. The Commission hereby finds good cause for approving Amendments No. 2 and 3 to the proposal, prior to the 30th day after publishing notice of Amendments No. 2 and 3 in the **Federal Register**. The revisions made to the proposal in the ISE's Amendment No. 2 clarify the operation of the PIM and were provided in response to issues raised in the Comment Letter and by Commission staff. In addition, the ISE in Amendment No. 3 established that paragraphs (c)(5), (d)(5), and (d)(6) of proposed ISE Rule 723 would be effective for a pilot period expiring on July 18, 2005. The Commission believes that the proposed changes in Amendments No. 2 and 3 are necessary to the proper functioning and implementation of the ISE PIM. The Commission further believes that Amendments No. 2 and 3 do not raise issues of regulatory concern that warrant further delay. Therefore, the Commission believes that accelerated approval of Amendments No. 2 and 3 is appropriate. Accordingly, pursuant to section 19(b)(2) of the Act,[95] the Commission finds good cause to approve Amendments No. 2 and 3 prior to the 30th day after notice of the Amendment is published in the **Federal Register**.

VII. Conclusion

For the foregoing reasons, the Commission finds that the proposed rule change, as amended, is consistent with the Act and the rules and regulations thereunder applicable to a national securities exchange, and, in particular, with section 6(b)(5) of the Act.[96]

It is therefore ordered, pursuant to section 19(b)(2) of the Act,[97] that the proposed rule change (SR–ISE–2003–06) and Amendment No. 1 are approved; and that Amendments No. 2 and 3 thereto are approved on an accelerated basis, except that provisions relating to paragraphs (c)(5), (d)(5), and (d)(6) of ISE Rule 723 are approved on a pilot basis until July 18, 2005.

For the Commission, by the Division of Market Regulation, pursuant to delegated authority.[98]

J. Lynn Taylor,

Assistant Secretary.

[FR Doc. 04–27395 Filed 12–14–04; 8:45 am]

BILLING CODE 8010–01–P

[94] 15 U.S.C. 78s(b)(2).

[95] 15 U.S.C. 78s(b)(2).

[96] 15 U.S.C. 78f(b)(5). In connection with the issuance of this approval order, neither the Commission or its staff is granting any exemptive or no-action relief from the requirements of Rule 10b–10. Accordingly, a broker-dealer executing a customer order through the PIM will need to comply with all applicable requirements of that Rule.

[97] 15 U.S.C. 78s(b)(2).

[98] 17 CFR 200.30–3(a)(12).

SECURITIES AND EXCHANGE COMMISSION

[Release No. 34–50823; File No. SR–NASD–2004–168]

Self-Regulatory Organizations; Notice of Filing of and Immediate Effectiveness of Proposed Rule Change by the National Association of Securities Dealers, Inc. Relating to Certificate of Designation for Preferred Stock of The Nasdaq Stock Market, Inc.

December 8, 2004.

Pursuant to section 19(b)(1) of the Securities Exchange Act of 1934 (''Act'')[1] and Rule 19b–4 thereunder,[2] notice is hereby given that on November 1, 2004 the National Association of Securities Dealers, Inc. (''NASD'' or ''Association''), through its subsidiary, The Nasdaq Stock Market, Inc. (''Nasdaq''), filed with the Securities and Exchange Commission (''SEC'' or ''Commission'') the proposed rule change as described in items I, II, and III below, which items have been prepared by Nasdaq. Pursuant to Rule 19b–4(f)(3),[3] Nasdaq has designated this filing as one solely concerned with the administration of the self-regulatory organization, and as such, the filing is immediately effective. The Commission is publishing this notice to solicit comments on the proposed rule change from interested persons.

I. Self-Regulatory Organization's Statement of the Terms of Substance of the Proposed Rule Change

Nasdaq is filing with the Commission a Certificate of Designations, Preferences and Rights (''Certificate of Designation'') of Series C Cumulative Preferred Stock (''Series C Preferred'') authorized to be issued to the NASD. The issuance of the Series C Preferred is part of a transaction between the NASD and Nasdaq whereby 1,338,402 shares of Nasdaq's Series A Cumulative Preferred

[1] 15 U.S.C. 78s(b)(1).

[2] 17 CFR 240.19b–4.

[3] 17 CFR 240.19b–4(f)(3).

Stock (''Series A Preferred'') owned by the NASD (representing all of the outstanding shares of Series A Preferred) will be exchanged for 1,338,402 shares of Nasdaq's Series C Preferred. The exchange of the Series A Preferred for the Series C Preferred is designed, among other things, to reduce Nasdaq's current dividend obligations to the NASD since the Series C Preferred has a lower initial dividend rate than the Series A Preferred, subject to payment of an additional dividend in certain circumstances.

Under Section 151(g) of the General Corporation Law of the State of Delaware (''Delaware Law''), such Certificate of Designation is deemed to be an amendment to Nasdaq's Restated Certificate of Incorporation. Pursuant to Exchange Act Rule 19b–4(f)(3),[4] Nasdaq has designated this filing as one solely concerned with the administration of the self-regulatory organization because the authorization and issuance of the Series C Preferred results in no substantive change in the NASD's control of Nasdaq, and as such, the filing is immediately effective.

II. Self Regulatory Organization's Statement of the Purpose of, and Statutory Basis for, the Proposed Rule Change

In its filing with the Commission, Nasdaq included statements concerning the purpose of, and basis for, the proposed rule change and discussed any comments it received on the proposed rule change. The text of these statements may be examined at the places specified in Item IV below. Nasdaq has prepared summaries, set forth in sections 1, 2, and 3 below, of the most significant aspects of such statements.

1. Purpose

Nasdaq is filing the Certificate of Designation described below. Under Article Fourth, Paragraph B of Nasdaq's Restated Certificate of Incorporation, Nasdaq's Board of Directors may authorize the issuance of preferred stock and fix its designation, powers, preferences and rights, as well as any qualifications, limitations, and restrictions on it. Under Delaware Law, such Certificate of Designation is deemed to be an amendment to Nasdaq's Restated Certificate of Incorporation, and as such, Nasdaq is filing the Certificate of Designation with the Commission.

The issuance of the Series C Preferred is part of a transaction between the NASD and Nasdaq whereby 1,338,402 shares of Series A Preferred owned by the NASD (representing all of the outstanding shares of Series A Preferred) will be exchanged for 1,338,402 shares of Nasdaq's Series C Preferred. The principal differences between the Series A Preferred and the Series C Preferred concern the amount and timing of dividend payments by Nasdaq to the NASD. The Series A Preferred carries an annual dividend rate of 7.6% for the year commencing March 2003, increasing to 10.6% for years thereafter. The Series C Preferred carries an annual dividend rate of 3.0% for the first two years from the applicable calculation date, increasing to 10.6% for periods thereafter. The Certificate of Designation sets forth certain situations in which the NASD will be entitled to an additional dividend amount upon redemption of the outstanding Series C Preferred, which Nasdaq may elect to pay in cash or shares of its common stock. Both the Series A Preferred and C Preferred are non-voting unless Nasdaq fails to pay a timely dividend. Thus, as in the case of the Series A Preferred, if Nasdaq fails to pay a timely dividend on the Series C Preferred, Nasdaq must increase the size of its Board to add two directors elected by the holders of the Series C Preferred.[5] Also, as in the case of the Series A Preferred, such directors would be required to resign upon the payment of the dividend or the redemption of the Series C Preferred. The NASD may not transfer the Series C Preferred without the prior written consent of Nasdaq for a period of one year from its issuance, which is the same initial transfer restriction period as was contained in the Series A Preferred.

The exchange of Series A Preferred for Series C Preferred and the issuance of the Series C Preferred will result in no substantive change in NASD's control of Nasdaq since neither series of preferred stock has voting rights, except in the limited circumstances discussed above. The Series C Preferred also will have no effect on the voting trust that governs the warrants to purchase Nasdaq common stock that were sold by the NASD in two private placements that closed in June 2000 and January 2001.

2. Statutory Basis

Nasdaq believes that the proposed rule change is consistent with the provisions of section 15A(b)(2) and (6) of the Act,[6] which require, among other things, that the Association be so organized and have the capacity to be able to carry out the purposes of the Act and to comply with and enforce compliance with the provisions of the Act, and that the Association's rules be designed to prevent fraudulent and manipulative acts and practices, to promote just and equitable principles of trade, and, in general, to protect investors and the public interest. Nasdaq believes that the issuance of this preferred stock will result in no substantive change in its current relationship to the NASD; as under the current ownership structure, the NASD will continue to control Nasdaq until exchange registration.

3. Self-Regulatory Organization's Statement on Burden on Competition

Nasdaq does not believe that the proposed rule change will result in any burden on competition that is not necessary or appropriate in furtherance of the purposes of the Act.

4. Self-Regulatory Organization's Statement on Comments on the Proposed Rule Change Received From Members, Participants, or Others

Nasdaq neither solicited nor received comments on the proposed rule change.

III. Date of Effectiveness of the Proposed Rule Change and Timing for the Commission Action

The foregoing rule change has become effective pursuant to section 19(b)(3)(A) of the Act[7] and subparagraph (f)(3) of Securities Exchange Act Rule 19b–4 thereunder because it is concerned solely with the administration of the self-regulatory organization.[8] At any time within 60 days of the filing of such proposed rule change, the Commission may summarily abrogate such rule change if it appears to the Commission that such action is necessary or appropriate in the public interest, for

[4] 17 CFR 240.19b–4(f)(3).

[5] Nasdaq continues to discuss with the Commission staff how Nasdaq intends to meet its obligation for fair representation of members on its Board under section 6(b)(3) of the Act if Nasdaq obtains approval of its exchange registration application. As a result of these discussions, Nasdaq may submit to the Commission amendments to its By-Laws with respect to its Board composition. The potential By-laws amendments under discussion could require the election of additional Board members if the Series C Preferred holder's right to elect Board members is triggered to ensure that the fair representation obligation is met at all times. December 1, 2004, telephone conference between John Zecca, Associate General Counsel, Nasdaq, and Geoff Pemble, Special Counsel, Division of Market Regulation, Commission. In addition, the Commission recently proposed rules that pertain to the governance, administration, transparency and ownership of self-regulatory organizations, which include compositional requirements for the board of directors of self-regulatory organizations. *See* Securities Exchange Act Release No. 50699 (November 18, 2004), 69 FR 71126 (December 8, 2004).

[6] 15 U.S.C. 78o-3(b)(2) and (6).

[7] 15 U.S.C. 78s(b)(3)(A).

[8] 17 CFR 240.19b–4(f)(3).

the protection of investors, or otherwise in furtherance of the purposes of the Act.

IV. Solicitation of Comments

Interested persons are invited to submit written data, views, and arguments concerning the foregoing, including whether the proposed rule change is consistent with the Act. Comments may be submitted by any of the following methods:

Electronic Comments

- Use the Commission's Internet comment form (*http://www.sec.gov/rules/sro.shtml*); or
- Send an e-mail to *rule-comments@sec.gov.* Please include File Number SR–NASD–2004–168 on the subject line.

Paper comments

- Send paper comments in triplicate to Jonathan G. Katz, Secretary, Securities and Exchange Commission, 450 Fifth Street, NW., Washington, DC 20549–0609.

All submissions should refer to File Number SR–NASD–2004–168. This file number should be included on the subject line if e-mail is used. To help the Commission process and review your comments more efficiently, please use only one method. The Commission will post all comments on the Commission's Internet Web site (*http://www.sec.gov/rules/sro.shtml*). Copies of the submission, all subsequent amendments, all written statements with respect to the proposed rule change that are filed with the Commission, and all written communications relating to the proposed rule change between the Commission and any person, other than those that may be withheld from the public in accordance with the provisions of 5 U.S.C. 552, will be available for inspection and copying in the Commission's Public Reference Section, 450 Fifth Street, NW., Washington, DC 20549. Copies of such filing also will be available for inspection and copying at the principal office of the NASD. All comments received will be posted without change; the Commission does not edit personal identifying information from submissions. You should submit only information that you wish to make available publicly.

All submissions should refer to File Number SR–NASD–2004–168 and should be submitted on or before January 5, 2005.

For the Commission, by the Division of Market Regulation, pursuant to delegated authority.[9]

J. Lynn Taylor,

Assistant Secretary.

[FR Doc. E4–3650 Filed 12–14–04; 8:45 am]

BILLING CODE 8010–01–P

[9] 17 CFR 200.30–3(a)(12).

SMALL BUSINESS ADMINISTRATION

Small Business Size Standards: Waiver of the Nonmanufacturer Rule

AGENCY: U.S. Small Business Administration.

ACTION: Notice to waive the nonmanufacturer rule for general aviation turboprop aircraft with six or more passenger seats.

SUMMARY: The U. S. Small Business Administration (SBA) is granting a waiver of the Nonmanufacturer Rule for General Aviation Turboprop Aircraft With Six Or More Passenger Seats. The basis for waivers is that no small business manufacturers are supplying these classes of products to the Federal government. The effect of a waiver would be to allow otherwise qualified regular dealers to supply the products of any domestic manufacturer on a Federal contract set aside for small businesses, service-disabled veteran-owned small businesses, SBA's Very Small Business Program or 8(a) businesses to provide the products of small business manufacturers or processors on such contracts.

DATE: This waiver is effective December 30, 2004.

FOR FURTHER INFORMATION CONTACT: Edith Butler, Program Analyst, by telephone at (202) 619–0422; by FAX at (202) 481–1788; or by e-mail at *edith.butler@sba.gov.*

SUPPLEMENTARY INFORMATION: Section 8(a)(17) of the Small Business Act, (Act) 15 U.S.C. 637(a)(17), requires that recipients of Federal contracts set aside for small businesses, service-disabled veteran-owned small businesses, SBA's Very Small Business Program or 8(a) businesses to provide the products of small business manufacturers or processor, if the recipient is other than the actual manufacturer or processor of the product. This requirement is commonly referred to as the Nonmanufacturer Rule. The SBA regulations imposing this requirement are found at 13 CFR 121.406 (b). Section 8(a)(17)(b)(iv) of the Act authorizes SBA to waive the Nonmanufacturer Rule for any ''class of products'' for which there are no small business manufacturers or processors available to participate in the Federal market.

As implemented in SBA's regulations at 13 CFR 121.1204, in order to be considered available to participate in the Federal market for a class of products, a small business manufacturer must have submitted a proposal for a contract solicitation or received a contract from the Federal government within the last 24 months. The SBA defines ''class of products'' based on six digit coding systems. The first coding system is the Office of Management and Budget North American Industry Classification System (NAICS). The second is the Product and Service Code established by the Federal Procurement Data System.

The SBA received a request on September 7, 2004 to waive the Nonmanufacturer Rule for General Aviation Turboprop Aircraft With Six Or More Passenger Seats. In response, on October 18, 2004, SBA published in the **Federal Register**, and October 19, 2004 in FedBizOpps notices of intent to the waiver of the Nonmanufacturer Rule for General Aviation Turboprop Aircraft With Six Or More Passenger Seats.

In response to theses notices, comments were received from interested parties. SBA has determined from these sources that there are no small business manufacturers of this class of product, and is therefore granting the waiver of Nonmanufacturer Rule for General Aviation Turboprop Aircraft With Six Or More Passenger Seats NAICS 336411.

Authority: 15 U.S.C. 637(a)(17).

Emily Murphy,

Acting Associate Administrator for Government Contracting.

[FR Doc. 04–27424 Filed 12–14–04; 8:45 am]

BILLING CODE 8025–01–P

DEPARTMENT OF TRANSPORTATION

Federal Aviation Administration

Notice of Intent To Rule on Request To Release Airport Property at Nick Wilson Field, Pocahontas, AR

AGENCY: Federal Aviation Administration (FAA), DOT.

ACTION: Notice of request to release airport property.

SUMMARY: The FAA proposes to rule and invites public comment on the release of land at Nick Wilson Field under the provisions of title 49 United States Code, section 47153.

DATES: Comments must be received on or before January 14, 2005.

ADDRESSES: Comments on this application may be mailed or delivered to the FAA at the following address: Mr. Edward N. Agnew, Manager, Federal Aviation Administration, Southwest Region, Airports Division, Arkansas/Oklahoma Airports Development Office, ASW–630, Forth Worth, Texas 76193–0630.

In addition, one copy of any comments submitted to the FAA must be mailed or delivered to Major Gary Crocker, City of Pocahontas, at the following address: City of Pocahontas, 410 North Marr Street, Pocahontas, AR 72455.

FOR FURTHER INFORMATION CONTACT: Mr. Paul Burns, Program Manager, Federal Aviation Administration, Arkansas/Oklahoma Airports Development Office, ASW–630, 2601 Meacham Boulevard, Fort Worth, Texas 76193–0630.

The request to release property may be reviewed in person at this same location.

SUPPLEMENTARY INFORMATION: The FAA invites public comment on the request to release property at Nick Wilson Field under the provisions of the Act.

On November 16, 2004, the FAA determined that the request to release property at Nick Wilson Field submitted by the city of Pocahontas met the procedural requirements of the Federal Aviation Regulations, part 155. The FAA may approve the request, in whole or in part, no later than January 16, 2005.

The following is a brief overview of the request:

The city of Pocahontas requests the release of 5.053 acres of airport property. The release of property and its subsequent sale will allow for the reconstruction of an aircraft parking hangar. The sale is estimated to provide $25,000.00, all of which will be used on the hanger reconstruction.

Any person may inspect the request in person at the FAA office listed above under **FOR FURTHER INFORMATION CONTACT**.

In addition, any person may, upon request, inspect the application, notice and other documents germane to the application in person at the Nick Wilson Field.

Issued in Fort Worth, Texas on November 22, 2004.

Naomi L. Saunders,

Manager, Airports Division.

[FR Doc. 04–27456 Filed 12–14–04; 8:45 am]

BILLING CODE 4910–13–M

DEPARTMENT OF TRANSPORTATION

Federal Aviation Administration

Notice of Intent To Rule on Application 05–07–C–00–DLH To Impose and Use the Revenue From a Passenger Facility Charge (PFC) at Duluth International Airport, Duluth, MN

AGENCY: Federal Aviation Administration (FAA), DOT.

ACTION: Notice of intent to rule on application

SUMMARY: The FAA proposes to rule and invites public comment on the application to impose and use the revenue from a PFC at Duluth International Airport under the provisions of the 49 U.S.C. 40117 and part 158 of the Federal Aviation Regulations (14 CFR part 158).

DATES: Comments must be received on or before January 14, 2004.

ADDRESSES: Comments on this application may be mailed or delivered in triplicate to the FAA at the following address: Federal Aviation Administration, Minneapolis Airports District Office, 6020 28th Avenue South, Room 102, Minneapolis, Minnesota 55450–2706.

In addition, one copy of any comments submitted to the FAA must be mailed or delivered to Mr. Brian D. Ryks, Executive Director, of the Duluth Airport Authority at the following address: Duluth Airport Authority, Duluth International Airport 4701 Grinden Drive, Duluth, MN 55811.

Air carriers and foreign air carriers may submit copies of written comments previously provided to the Duluth Airport Authority under section 158.23 of part 158.

FOR FURTHER INFORMATION CONTACT: Mr. Gordon Nelson, Program Manager, Federal Aviation Administration, Minneapolis Airports District Office, 6020 28th Avenue South, Room 102, Minneapolis, Minnesota 55450–2706, telephone (612) 713–4358. The application may be reviewed in person at this same location.

SUPPLEMENTARY INFORMATION: The FAA proposes to rule and invites public comment on the application to impose and use the revenue form a PFC at Duluth International Airport under the provisions of the 49 U.S.C. 40117 and part 158 of the Federal Aviation Regulations (14 CFR part 158).

On December 3, 2004, the FAA determined that the application to impose and use the revenue form a PFC submitted by the Duluth Airport Authority was substantially complete within the requirements of section 158.25 of part 158. The FAA will approve or disapprove the application, in whole or in part, no later than March 8, 2005.

The following is a brief overview of the application.

Proposed charge effective date: March 1, 2005.

Proposed charge expiration date: April 1, 2010.

Level of the proposed PFC: $4.50.

Total estimated PFC revenue: $2,745,402.

Brief description of proposed projects: Prepare Passenger Facility Charge application; improve Runway 21 Runway Safety Area (RSA); replace Runway End Identifier Lights (REIL) for Runway 21; rehabilitate Taxiways A, A–5, and run-up pad; rehabilitate the Medium Intensity Taxiway Edge Lighting System (MITL) for Taxiways A, A–5, and the run-up pad; prepare Environmental Assessment for construction and installation of a perimeter road and security/safety fence; rehabilitate Taxiway E (1,000 feet) and taxiway edge lighting system; rehabilitate Runway 9/27 and replace the High Intensity Runway Edge Lighting system (HIRL) (3 phases); replace/install airfield signs along Runway 9/27 and associated taxiways (3 phases); acquire a passenger boarding bridge; acquire a runway sweeper; construct perimeter road (2 phases); install security/safety fencing (2 phases); construct aircraft rescue and fire fighting facility; wetland mitigation for north-side airfield development; purchase replacement snow removal equipment (rotary snow blower, batwing snow plow, and snow sweeper). Class or classes of air carriers, which the public agency has requested, not be required to collect PFCs: non-scheduled part 135 Air Taxi/Commercial Operators (ATCO).

Any person may inspect the application in person at the FAA office listed above under **FOR FURTHER INFORMATION CONTACT**.

In addition, any person may, upon request, inspect the application, notice and other documents germane to the application in person at the Duluth Airport Authority.

Issued in Des Plaines, Illinois on December 9, 2004.

Barbara Jordan,

Acting Manager, Planning/Programming Branch, Airports Division, Great Lakes Region.

[FR Doc. 04–27457 Filed 12–14–04; 8:45 am]

BILLING CODE 4910–13–M

DEPARTMENT OF TRANSPORTATION

Federal Aviation Administration

Notice of Intent To Rule on Application To Impose and Use the Revenue From a Passenger Facility Charge (PFC) at Montgomery Regional Airport (Dannelly Field), Montgomery, AL

AGENCY: Federal Aviation Administration (FAA), DOT.

ACTION: Notice of intent to rule on application

SUMMARY: The FAA proposes to rule and invites public comment on the application to impose and use the revenue from a PFC at Montgomery Regional Airport under the provisions of the Aviation Safety and Capacity Expansion Act of 1990 (Title IX of the Omnibus Budget Reconciliation Act of 1990) (Pub. L. 101–508) and Part 158 of the Federal Aviation Regulations (14 CFR part 158).

DATES: Comments must be received on or before January 14, 2005.

ADDRESSES: Comments on this application may be mailed or delivered in triplicate to the FAA at the following address: Jackson Airports District Office, 100 West Cross Street, Suite B; Jackson, MS 39208–2307.

In addition, one copy of any comments submitted to the FAA must be mailed or delivered to Mr. Phil B. Perry, Executive Director of the Montgomery Regional Airport at the following address: 4445 Selma Highway, Montgomery, Al 36108.

Air carriers and foreign air carriers may submit copies of written comments previously provided to the Montgomery Regional Airport under section 158.23 of Part 158.

FOR FURTHER INFORMATION CONTACT: Mr. Roderick T. Nicholson, Program Manager, Jackson Airports District Office, 100 West Cross Street, Suite B; Jackson, MS 39208–2307, 601–664–9884. The application may be reviewed in person at this same location.

SUPPLEMENTARY INFORMATION: The FAA proposes to rule and invites public comment on the application to impose and use the revenue from a PFC at Montgomery Regional Airport under the provisions of the Aviation Safety and Capacity Expansion Act of 1990 (Title IX of the Omnibus Budget Reconciliation Act of 1990) (Pub. L. 101–508) and Part 158 of the Federal Aviation Regulation (14 CFR part 158).

On December 9, 2004, the FAA determined that the application to impose and use the revenue from a PFC submitted by Montgomery Regional Airport was substantially complete within the requirements of section 158.25 of Part 158. The FAA will approve or disapprove the application, in whole or in part, no later than March 24, 2005.

The following is a brief overview of the application.

PFC Application No.: 05–01–C–00–MGM.

Level of the proposed PFC: $4.50.

Proposed charge effective date: March 1, 2005.

Proposed charge expiration date: December 31, 2026.

Total estimated net PFC revenue: $28,652,453.00.

Brief description of proposed project(s): Terminal Renovation Project (Phase 3).

Class or classes of air carriers which the public agency has requested not be required to collect PFCs: Companies belonging to the Large Certificated Route Air Carriers (LCRAC) and Small Certificated Air Carriers (SCAC).

Any person may inspect the application in person at the FAA office listed above under **FOR FURTHER INFORMATION CONTACT**.

In addition, any person may, upon request, inspect the application, notice and other documents germane to the application in person at the Montgomery Regional Airport.

Issued in Jackson, Mississippi on December 9, 2004.

Mr. Rans D. Black,

Manager, Jackson Airports District Office, Southern Region.

[FR Doc. 04–27458 Filed 12–14–04; 8:45 am]

BILLING CODE 4910–13–M

DEPARTMENT OF TRANSPORTATION

National Highway Traffic Safety Administration

[U.S. DOT Docket Number NHTSA–2004–19685]

Reports, Forms and Recordkeeping Requirements

AGENCY: National Highway Traffic Safety Administration (NHTSA), Department of Transportation.

ACTION: Request for public comment on renewal of existing information collections.

SUMMARY: Before a Federal agency can collect certain information from the public, it must receive approval from the Office of Management and Budget (OMB). Under procedures established by the Paperwork Reduction Act of 1995, before seeking OMB approval, Federal agencies must solicit public comment on proposed collections of information, including extensions and reinstatement of previously approved collections. This document describes a renewal or revision of three existing information collections for which NHTSA intends to seek OMB approval.

DATES: Comments must be received on February 14, 2005.

ADDRESSES: Comments must refer to the docket notice numbers cited at the beginning of this notice and be submitted to Docket Management, Room PL–401, 400 Seventh Street, SW., Washington, DC 20590. Please identify the proposed collection of information for which a comment is provided. It is requested, but not required, that one (1) original plus two (2) copies of the comment be provided. The docket section is open on weekdays from 10 a.m. to 5 p.m.

FOR FURTHER INFORMATION CONTACT: Larry Long, Office of Defects Investigation, NHTSA, 400 Seventh Street, SW., Room 5319, NVS–215, Washington, DC 20590. Telephone: (202) 366–6281.

SUPPLEMENTARY INFORMATION: Under the Paperwork Reduction Act of 1995 (PRA), before an agency submits a proposed collection of information to OMB for approval, it must first publish a document in the **Federal Register** providing a 60-day comment period and otherwise consult with members of the public and affected agencies concerning the proposed collection of information. OMB has promulgated regulations describing what must be included in such a document. Under OMB's regulation (at 5 CFR 1320.8(d)), an agency must ask for public comment on the following:

(i) Whether the proposed collection of information is necessary for the proper performance of the functions of the agency, including whether the information will have practical utility;

(ii) The accuracy of the agency's estimate of the burden of the proposed collection of information, including the validity of the methodology and assumptions used;

(iii) How to enhance the quality, utility, and clarity of the information to be collected;

(iv) How to minimize the burden of the collection of information on those who are to respond, including the use of appropriate automated, electronic, mechanical, or other technological collection techniques or other forms of information technology, *e.g.*, permitting electronic submission of responses.

In compliance with these requirements, NHTSA asks for public comments on the renewal or revision of

the following described collections of information:

(1) *Title:* Petitions for Hearing on Notification and Remedy of Defects.

Type of Request: Renewal of an information collection.

OMB Control Number: 2127–0039.

Affected Public: Businesses or individuals.

Abstract: NHTSA's statutory authority at 49 U.S.C. 30118(e) and 30120(e) specifies that ''on petition of any interested person,'' NHTSA may hold a hearing to determine whether a manufacturer of motor vehicles or motor vehicle equipment has met its obligation to notify owners, purchasers, and dealers of vehicles or equipment of a safety-related defect or noncompliance with a Federal motor vehicle safety standard in the manufacturer's products and to remedy the defect or noncompliance.

To implement these statutory provisions, NHTSA has promulgated 49 CFR part 557, Petitions for Hearings on Notification and Remedy of Defects [41 FR 56812, Dec. 30, 1976], which establishes procedures to provide for the submission and disposition of petitions for hearings on the issue of whether the manufacturer has met its obligation to notify owners, purchasers, and dealers of safety-related defects or noncompliances or to remedy the problems by repair, repurchase, or replacement.

Estimated annual burden: In the past, NHTSA estimated that 21 petitions would be submitted annually and that each would require 1 hour to prepare. However, in recent years, a total of 2 petitions have been filed. Our estimate of the time it takes to prepare each petition remains at 1 hour. Accordingly, the burden estimate is revised to be 2 annual hours burden (2 petitions times 1 hour per petition).

Number of respondents: 2.

(2) *Title:* Record Retention.

Type of Request: Revision of a currently approved information collection.

OMB Control Number: 2127–0042.

Affected Public: Business or other for-profit.

Abstract: Under 49 U.S.C. 30166(e), NHTSA ''reasonably may require a manufacturer of a motor vehicle or motor vehicle equipment to keep records, and a manufacturer, distributor, or dealer to make reports, to enable [NHTSA] to decide whether the manufacturer, distributor or dealer has complied or is complying with this chapter or a regulation prescribed or order issued under this chapter.''

To ensure that NHTSA will have access to this type of information, the agency exercised the authority granted in 49 U.S.C. 30166(e) and promulgated 49 CFR Part 576, Record Retention, initially published on August 20, 1974 (39 FR 30045) and most recently amended on July 10, 2002 (67 FR 45873), requiring manufacturers to retain one copy of all records that contain information concerning malfunctions that may be related to motor vehicle safety for a period of five calendar years after the record is generated or acquired by the manufacturer. Manufacturers are also required to retain for five years the underlying records related to early warning reporting (EWR) information submitted under 49 CFR Part 579.

Estimated annual burden: Previously, the burden hours were estimated at 40,000 hours (1000 respondents × 40 hours). The new requirements affect an additional 20 equipment manufacturers annually. While there are approximately 23,600 equipment manufacturers, their reporting requirements under Part 579 are limited to incidents involving deaths. Therefore, based on the number of death reports submitted to date by equipment manufacturers, we estimate that the number of equipment manufacturers required to maintain records underlying their EWR reports is approximately 20. We estimate that it will take one hour to maintain the necessary records. Also, 1,000 manufacturers of vehicles, tires and child restraint systems will be required to maintain records for their EWR reports, however, these are included in the prior approved information collection. Accordingly, the total estimate of the annual burden hours are 40,020 hours (20 respondents times 1 hour, plus 1000 respondents times 40 hours).

Number of respondents: 1,020.

(3) *Title:* Names and Addresses of First Purchasers Of Motor Vehicles.

Type of Request: Renewal of an information collection.

OMB Control Number: 2127–0044.

Affected Public: Businesses or other for profit.

Abstract: Pursuant to 49 U.S.C. 30117(b), a manufacturer of a motor vehicle or tire (except a retreaded tire) shall maintain a record of the name and address of the first purchasers of each vehicle or tire it produces and, to the extent prescribed by regulation of the Secretary, shall maintain a record of the name and address of the first purchaser of replacement equipment (except a tire) that the manufacturer produces. This agency has no regulation specifying how the information is to be collected or maintained for vehicles, and no requirement pertaining to manufacturers of replacement equipment. Requirements for first purchaser of tires information are contained in 49 CFR 574, Tire Identification and Recordkeeping, and the burden of that information collection is not part of this information collection.

When 49 U.S.C. 30117 was enacted in 1966, it recognized that an efficient recall of defective or noncomplying motor vehicles required that vehicle manufacturers retain an accurate record of vehicle purchasers to notify in the event of a recall. Because manufacturers routinely maintain purchaser information for other business reasons, experience with this statutory requirement has shown that manufacturers have retained this information in a manner sufficient to enable them to expeditiously notify vehicle purchasers in case of a recall. Based on this experience, NHTSA determined that no regulation was needed.

Estimated annual burden: In peak sales years, approximately 17,500,000 new vehicles are sold annually. Vehicle manufacturers maintain a list of first purchasers based on information supplied to them by their dealer network. Each submission, through the use of a computerized verification system, requires the vehicle identification number and the purchaser's name and address. We estimate that it takes the dealer approximately 3 minutes (0.05 hours) to record the purchaser's information in each sales transaction. Therefore, the annual hours of burden to record the first purchaser information based upon recent vehicle sales will be 875,000 hours (0.05 hours x 17,500,000 responses). Further, we estimate that approximately 1,000 vehicle manufacturers must keep records and that each manufacturer requires 200 hours to keep these records for a total of 200,000 annual hours. Accordingly, the total annual reporting and recordkeeping burden for vehicle manufacturers is 1,075,000 hours (875,000 hours + 200,000 hours). The annual burden of first purchaser information for tires has been included in information collection 2127–0050, Tire Identification and Recordkeeping, which is not part of this notice.

Number of respondents: 1000 respondents and 17,500,000 annual responses.

Kathleen C. DeMeter,

Director for Office of Defects Investigation.

[FR Doc. 04–27452 Filed 12–14–04; 8:45 am]

BILLING CODE 4910–59–P

DEPARTMENT OF TRANSPORTATION

National Highway Traffic Safety Administration

[Docket No. NHTSA 2004–19347; Notice 2]

Bridgestone/Firestone North American Tire, LLC, Grant of Petition for Decision of Inconsequential Noncompliance

Bridgestone/Firestone North American Tire, LLC (Bridgestone/Firestone) has determined that certain tires it manufactured do not comply with S6.5 of Federal Motor Vehicle Safety Standard (FMVSS) No. 119, ''New pneumatic tires for vehicles other than passenger cars.'' Pursuant to 49 U.S.C. 30118(d) and 30120(h), Bridgestone/Firestone has petitioned for a determination that this noncompliance is inconsequential to motor vehicle safety and has filed an appropriate report pursuant to 49 CFR part 573, ''Defect and Noncompliance Reports.'' Notice of receipt of a petition was published, with a 30-day comment period, on October 26, 2004, in the **Federal Register** (69 FR 62513). NHTSA received one comment.

A total of approximately 1,083 sizes 2.75–10 and 80/90–10 Bridgestone HOOP tires are affected. S6.5 of FMVSS No. 119 requires that the maximum load rating and corresponding inflation pressure of the tires be marked on the tire in both English and metric units. The noncompliant tires do not have the metric markings. The actual stamping is ''MAX. LOAD 355 LBS AT 36 PSI COLD.'' The correct stamping should be ''MAX. LOAD 160kg (353 LBS) AT 50 kPa (36 PSI) COLD.''

Bridgestone/Firestone believes that the noncompliance is inconsequential to motor vehicle safety and that no corrective action is warranted. Bridgestone/Firestone states that the actual performance of the tires will not be affected by the mismarking, and that the tires meet or exceed all performance requirements of FMVSS No. 119. Further, Bridgestone/Firestone states that the mismarking will have no impact on the operational performance or safety of vehicles on which the tires are mounted, and that the problem has been corrected.

The agency agrees that the noncompliance is inconsequential to safety. The correct English unit information required by FMVSS No. 119 is provided and therefore is likely to achieve the safety purposes of the requirement. All other informational markings are present, and the tires meet or exceed all of the performance requirements of FMVSS No. 119. Bridgestone/Firestone has corrected the problem. One comment was received. However, the comment does not address the effect of the noncompliance on motor vehicle safety, and therefore is not persuasive in its argument that the petition should not be granted.

In consideration of the foregoing, NHTSA has decided that the petitioner has met its burden of persuasion that the noncompliance described is inconsequential to motor vehicle safety. Accordingly, Bridgestone/Firestone's petition is granted and the petitioner is exempted from the obligation of providing notification of, and a remedy for, the noncompliance.

Authority: 49 U.S.C. 30118, 30120; delegations of authority at CFR 1.50 and 501.8.

Issued on: December 9, 2004.

Kenneth N. Weinstein,

Associate Administrator for Enforcement.

[FR Doc. 04–27454 Filed 12–14–04; 8:45 am]

BILLING CODE 4910–59–P

DEPARTMENT OF TRANSPORTATION

National Highway Traffic Safety Administration

[Docket No. NHTSA–2004–19792; Notice 1]

Unified Marine, Inc., Receipt of Petition for Decision of Inconsequential Noncompliance

Unified Marine, Inc. (Unified Marine) has determined that certain combination lamps it distributed for sale, which were produced in 2002 through 2004, do not comply with 49 CFR 571.108, Federal Motor Vehicle Safety Standard (FMVSS) No. 108, ''Lamps, reflective devices, and associated equipment.'' Unified Marine has filed an appropriate report pursuant to 49 CFR part 573, ''Defect and Noncompliance Reports.''

Pursuant to 49 U.S.C. 30118(d) and 30120(h), Unified Marine has petitioned for an exemption from the notification and remedy requirements of 49 U.S.C. chapter 301 on the basis that this noncompliance is inconsequential to motor vehicle safety.

This notice of receipt of Unified Marine's petition is published under 49 U.S.C. 30118 and 30120 and does not represent any agency decision or other exercise of judgment concerning the merits of the petition.

Approximately 52,665 combination lamps and combination lamp kits produced between December 2002 and July 2004 and marketed as ''Road Warrior by SeaSense'' are affected. These include the following combination lamps: 1,624 model 50080272 (right hand), 1,001 model 50080274 (left hand), 1,612 model 80272, and 1,947 model 80274, as well as 46,481 model 50080270 combination lamp kits that consist of two lamps per kit.

The subject rear combination lamps contain taillamps, stop lamps, turn signal lamps, rear reflex reflectors, and a side marker lamp. In addition, the combination lamps designated for the left (driver's) side of the vehicle contain a license plate lamp. FVMSS No. 108, S5.8.1, requires that each lamp, reflective device, or item of associated equipment manufactured to replace any lamp, reflective device, or item of associated equipment on any vehicle to which this standard applies, be designed to conform to the standard. As such, in order to comply with S5.8.1, the combination lamps must be designed to conform to the photometry, color, and other requirements specific to the devices incorporated into the lamp combination.

Unified Marine's noncompliance report indicates that the lamps may have incorrectly positioned circuit boards that, consequently, cause insufficient light output to meet the minimum color and photometry requirements of the standard.

Unified Marine believes that the noncompliance is inconsequential to motor vehicle safety and that no corrective action is warranted. Unified Marine states that

> * * * our light has some deficiencies that are only detectable by highly sensitive testing equipment and not by visual means in actual use and therefore is not a safety issue. Upon review and extensive research, we have found out that the variations are not perceivable to the naked eye, and they are indeed inconsequential as they may only be seen in the laboratory environment. The lights are in no way unsafe in our opinion, and in fact much safer than the millions of conventional lights currently used in the marketplace.

Interested persons are invited to submit written data, views, and arguments on the petition described above. Comments must refer to the docket and notice number cited at the beginning of this notice and be submitted by any of the following methods. *Mail:* Docket Management Facility, U.S. Department of Transportation, Nassif Building, Room PL–401, 400 Seventh Street, SW., Washington, DC 20590–0001. *Hand Delivery:* Room PL–401 on the plaza level of the Nassif Building, 400 Seventh Street, SW., Washington, DC. It is requested, but not required, that two copies of the comments be provided. The Docket Section is open on

weekdays from 10 a.m. to 5 p.m. except Federal holidays. Comments may be submitted electronically by logging onto the Docket Management System Web site at *http://dms.dot.gov.* Click on ''Help'' to obtain instructions for filing the document electronically. Comments may be faxed to 1–202–493–2251, or may be submitted to the Federal eRulemaking Portal: go to *http://www.regulations.gov.* Follow the online instructions for submitting comments.

The petition, supporting materials, and all comments received before the close of business on the closing date indicated below will be filed and will be considered. All comments and supporting materials received after the closing date will also be filed and will be considered to the extent possible. When the petition is granted or denied, notice of the decision will be published in the **Federal Register** pursuant to the authority indicated below.

Comment closing date: January 14, 2005.

Authority: 49 U.S.C. 30118, 30120: delegations of authority at CFR 1.50 and 501.8.

Issued on: December 9, 2004.

Kenneth N. Weinstein,

Associate Administrator for Enforcement.

[FR Doc. 04–27455 Filed 12–14–04; 8:45 am]

BILLING CODE 4910–59–P

DEPARTMENT OF THE TREASURY

Submission for OMB Review; Comment Request

December 7, 2004.

The Department of the Treasury has submitted the following public information collection requirement(s) to OMB for review and clearance under the Paperwork Reduction Act of 1995, Public Law 104–13. Copies of the submission(s) may be obtained by calling the Treasury Bureau Clearance Officer listed. Comments regarding this information collection should be addressed to the OMB reviewer listed and to the Treasury Department Clearance Officer, Department of the Treasury, Room 11000, 1750 Pennsylvania Avenue, NW., Washington, DC 20220.

Dates: Written comments should be received on or before January 14, 2005 to be assured of consideration.

Internal Revenue Service (IRS)

OMB Number: 1545–0633.

Notice Numbers: Notices 437, 437–A, 438 and 466.

Type of Review: Extension.

Title: Notice of Intention to Disclose.

Description: Notice is required by 26 U.S.C. 6100(f). A reply is necessary if the recipient disagrees with the Service's proposed deletions. The Service uses the reply to consider the propriety of making additional deletions to the public inspection version of written determinations or related background file documents.

Respondents: Individuals or households, Business or other for-profit, Not-for-profit institutions, Farms, State, Local or tribal government.

Estimated Number of Respondents: 5,250.

Estimated Burden Hours Respondent: 30 minutes.

Frequency of Response: On occasion.

Estimated Total Reporting Burden: 2,625 hours.

OMB Number: 1545–1349.

Form Number: None.

Type of Review: Revision.

Title: Cognitive and Psychological Research.

Description: The proposed research will improve the quality of the data collection by examining the psychological and cognitive aspects of methods and procedures such as: interviewing processes, forms redesign, survey and tax collection technology and operating procedures (internal and external in nature).

Respondents: Individuals or households, Business or other for-profit.

Estimated Number of Recordkeepers: 75,000.

Estimated Burden Hours Recordkeeper: 30 minutes.

Estimated Total Reporting Burden: 37,500 hours.

Clearance Officer: R. Joseph Durbala (202) 622–3634, Internal Revenue Service, Room 6516, 1111 Constitution Avenue, NW., Washington, DC 20224.

OMB Reviewer: Joseph F. Lackey, Jr. (202) 395–7316, Office of Management and Budget, Room 10235, New Executive Office Building, Washington, DC 20503.

Lois K. Holland,

Treasury PRA Clearance Officer.

[FR Doc. 04–27391 Filed 12–14–04; 8:45 am]

BILLING CODE 4830–01–P

DEPARTMENT OF THE TREASURY

Office of Thrift Supervision

Proposed Agency Information Collection Activities; Comment Request—Application for Issuance of Subordinated Debt Securities/Notice of Issuance of Subordinated Debt or Mandatorily Redeemable Preferred Stock

AGENCY: Office of Thrift Supervision (OTS), Treasury.

ACTION: Notice and request for comment.

SUMMARY: The Department of the Treasury, as part of its continuing effort to reduce paperwork and respondent burden, invites the general public and other Federal agencies to comment on proposed and continuing information collections, as required by the Paperwork Reduction Act of 1995, 44 U.S.C. 3507. The Office of Thrift Supervision within the Department of the Treasury will submit the proposed information collection requirement described below to the Office of Management and Budget (OMB) for review, as required by the Paperwork Reduction Act. Today, OTS is soliciting public comments on the proposal to reinstate this information collection.

DATES: Submit written comments on or before February 14, 2005.

ADDRESSES: Send comments, referring to the collection by title of the proposal or by OMB approval number, to Information Collection Comments, Chief Counsel's Office, Office of Thrift Supervision, 1700 G Street, NW., Washington, DC 20552; send a facsimile transmission to (202) 906–6518; or send an e-mail to *infocollection.comments@ots.treas.gov.* OTS will post comments and the related index on the OTS Internet site at *http://www.ots.treas.gov.* In addition, interested persons may inspect comments at the Public Reading Room, 1700 G Street, NW., by appointment. To make an appointment, call (202) 906–5922, send an e-mail to *publicinfo@ots.treas.gov,* or send a facsimile transmission to (202) 906–7755.

FOR FURTHER INFORMATION CONTACT: You can request additional information about this proposed information collection from Marilyn K. Burton, Senior Paralegal (Regulations), (202) 906–6467, Office of Thrift Supervision, 1700 G Street, NW., Washington, DC 20552.

SUPPLEMENTARY INFORMATION: OTS may not conduct or sponsor an information collection, and respondents are not

required to respond to an information collection, unless the information collection displays a currently valid OMB control number. As part of the approval process, we invite comments on the following information collection.

Comments should address one or more of the following points:

a. Whether the proposed collection of information is necessary for the proper performance of the functions of OTS;

b. The accuracy of OTS's estimate of the burden of the proposed information collection;

c. Ways to enhance the quality, utility, and clarity of the information to be collected;

d. Ways to minimize the burden of the information collection on respondents, including through the use of information technology.

We will summarize the comments that we receive and include them in the OTS request for OMB approval. All comments will become a matter of public record. In this notice, OTS is soliciting comments concerning the following information collection.

Title of Proposal: Application for Issuance of Subordinated Debt Securities/Notice of Issuance of Subordinated Debt or Mandatorily Redeemable Preferred Stock.

OMB Number: 1550–0030.

Form Number: OTS Forms 1344 and 1561.

Regulation requirement: 12 CFR 563.81.

Description: The information provided to OTS is used to determine if the proposed issuance of securities will benefit the thrift industry or create an unreasonable risk to the Savings Association Insurance Fund.

Type of Review: Reinstatement.

Affected Public: Savings Associations.

Estimated Number of Respondents: 9 (Standard—3; Expedited—6).

Estimated Burden Hours per Response: Standard—60 hours; Expedited—1 hour.

Estimated Frequency of Response: Annually.

Estimated Total Burden: 186 hours (Standard—180 hours; Expedited—6 hours).

Clearance Officer: Marilyn K. Burton, (202) 906–6467, Office of Thrift Supervision, 1700 G Street, NW., Washington, DC 20552.

OMB Reviewer: Mark Menchik, (202) 395–3176, Office of Management and Budget, Room 10236, New Executive Office Building, Washington, DC 20503.

Dated: December 9, 2004.

By the Office of Thrift Supervision.

Richard M. Riccobono,

Deputy Director.

[FR Doc. 04–27381 Filed 12–14–04; 8:45 am]

BILLING CODE 6720–01–P

DEPARTMENT OF THE TREASURY

Office of Thrift Supervision

Proposed Agency Information Collection Activities; Comment Request—Management Official Interlocks

AGENCY: Office of Thrift Supervision (OTS), Treasury.

ACTION: Notice and request for comment.

SUMMARY: The Department of the Treasury, as part of its continuing effort to reduce paperwork and respondent burden, invites the general public and other Federal agencies to comment on proposed and continuing information collections, as required by the Paperwork Reduction Act of 1995, 44 U.S.C. 3507. The Office of Thrift Supervision within the Department of the Treasury will submit the proposed information collection requirement described below to the Office of Management and Budget (OMB) for review, as required by the Paperwork Reduction Act. Today, OTS is soliciting public comments on its proposal to reinstate this information collection.

DATES: Submit written comments on or before February 14, 2005.

ADDRESSES: Send comments, referring to the collection by title of the proposal or by OMB approval number, to Information Collection Comments, Chief Counsel's Office, Office of Thrift Supervision, 1700 G Street, NW., Washington, DC 20552; send a facsimile transmission to (202) 906–6518; or send an e-mail to *infocollection.comments@ots.treas.gov.* OTS will post comments and the related index on the OTS Internet site at *http://www.ots.treas.gov.* In addition, interested persons may inspect comments at the Public Reading Room, 1700 G Street, NW., by appointment. To make an appointment, call (202) 906–5922, send an e-mail to *publicinfo@ots.treas.gov,* or send a facsimile transmission to (202) 906–7755.

FOR FURTHER INFORMATION CONTACT: You can request additional information about this proposed information collection from Marilyn K. Burton, Senior Paralegal (Regulations), (202) 906–6467, Office of Thrift Supervision, 1700 G Street, NW., Washington, DC 20552.

SUPPLEMENTARY INFORMATION: OTS may not conduct or sponsor an information collection, and respondents are not required to respond to an information collection, unless the information collection displays a currently valid OMB control number. As part of the approval process, we invite comments on the following information collection.

Comments should address one or more of the following points:

a. Whether the proposed collection of information is necessary for the proper performance of the functions of OTS;

b. The accuracy of OTS's estimate of the burden of the proposed information collection;

c. Ways to enhance the quality, utility, and clarity of the information to be collected;

d. Ways to minimize the burden of the information collection on respondents, including through the use of information technology.

We will summarize the comments that we receive and include them in the OTS request for OMB approval. All comments will become a matter of public record. In this notice, OTS is soliciting comments concerning the following information collection.

Title of Proposal: Management Official Interlocks.

OMB Number: 1550–0051.

Form Number: N/A.

Regulation requirement: 12 CFR part 563f.

Description: OTS requires information to evaluate the merits of interlocks exemption applications. 12 CFR part 563f sets forth several interlocking relationships that are prohibited. Generally, a management official of a depository institution or depository holding company may not serve as a management official of an unaffiliated depository institution or depository holding company if the entities in question (or a depository institution affiliate thereof) have offices in the same community or metropolitan statistical area or are of a certain asset size. Notwithstanding these general prohibitions, § 563f.4 provides that prohibited interlocking relationships will not apply in certain circumstances.

Type of Review: Reinstatement.

Affected Public: Savings Associations.

Estimated Number of Respondents: 8.

Estimated Burden Hours per Response: 4 hours.

Estimated Frequency of Response: Event-generated.

Estimated Total Burden: 32 hours.

Clearance Officer: Marilyn K. Burton, (202) 906–6467, Office of Thrift Supervision, 1700 G Street, NW., Washington, DC 20552.

OMB Reviewer: Mark Menchik, (202) 395–3176, Office of Management and

Budget, Room 10236, New Executive Office Building, Washington, DC 20503.

Dated: December 9, 2004.
By the Office of Thrift Supervision.

Richard M. Riccobono,

Deputy Director.

[FR Doc. 04–27382 Filed 12–14–04; 8:45 am]

BILLING CODE 6720–01–P

DEPARTMENT OF THE TREASURY

Office of Thrift Supervision

Proposed Agency Information Collection Activities; Comment Request—Application Processing Fees

AGENCY: Office of Thrift Supervision (OTS), Treasury.

ACTION: Notice and request for comment.

SUMMARY: The Department of the Treasury, as part of its continuing effort to reduce paperwork and respondent burden, invites the general public and other Federal agencies to comment on proposed and continuing information collections, as required by the Paperwork Reduction Act of 1995, 44 U.S.C. 3507. The Office of Thrift Supervision within the Department of the Treasury will submit the proposed information collection requirement described below to the Office of Management and Budget (OMB) for review, as required by the Paperwork Reduction Act. Today, OTS is soliciting public comments on its proposal to reinstate this information collection.

DATES: Submit written comments on or before February 14, 2005.

ADDRESSES: Send comments, referring to the collection by title of the proposal or by OMB approval number, to Information Collection Comments, Chief Counsel's Office, Office of Thrift Supervision, 1700 G Street, NW., Washington, DC 20552; send a facsimile transmission to (202) 906–6518; or send an e-mail to *infocollection.comments@ots.treas.gov.* OTS will post comments and the related index on the OTS Internet site at *http://www.ots.treas.gov.* In addition, interested persons may inspect comments at the Public Reading Room, 1700 G Street, NW., by appointment. To make an appointment, call (202) 906–5922, send an e-mail to *publicinfo@ots.treas.gov,* or send a facsimile transmission to (202) 906–7755.

FOR FURTHER INFORMATION CONTACT: You can request additional information about this proposed information collection from Marilyn K. Burton, Senior Paralegal (Regulations), (202) 906–6467, Office of Thrift Supervision, 1700 G Street, NW., Washington, DC 20552.

SUPPLEMENTARY INFORMATION: OTS may not conduct or sponsor an information collection, and respondents are not required to respond to an information collection, unless the information collection displays a currently valid OMB control number. As part of the approval process, we invite comments on the following information collection.

Comments should address one or more of the following points:

a. Whether the proposed collection of information is necessary for the proper performance of the functions of OTS;

b. The accuracy of OTS's estimate of the burden of the proposed information collection;

c. Ways to enhance the quality, utility, and clarity of the information to be collected;

d. Ways to minimize the burden of the information collection on respondents, including through the use of information technology.

We will summarize the comments that we receive and include them in the OTS request for OMB approval. All comments will become a matter of public record. In this notice, OTS is soliciting comments concerning the following information collection.

Title of Proposal: Application Processing Fees.

OMB Number: 1550–0053.

Form Number: N/A.

Regulation requirement: 12 CFR 502.5 and 502.70.

Description: Pursuant to Section 9 of the HOLA, 12 U.S.C. 1467, the Director of the Office of Thrift Supervision (''OTS'') is authorized to charge assessments to recover the costs of examining savings associations and their affiliates, to charge fees to recover the costs of processing applications and other filings, and to charge fees to cover OTS's direct and indirect expenses in regulating savings associations and their affiliates.

An institution must submit a fee with certain applications, including Securities and Exchange Act of 1934 filings, notices, and requests (hereafter collectively referred to as ''applications''), before such applications will be accepted for processing by OTS. 12 CFR 502.5. The institution is required to state how it calculates the appropriate fee, in accordance with OTS's schedule. 12 CFR 502.70.

Type of Review: Reinstatement.

Affected Public: Savings Associations.

Estimated Number of Respondents: 2,143.

Estimated Burden Hours per Response: .036 hours.

Estimated Frequency of Response: Event-generated.

Estimated Total Burden: 77 hours.

Clearance Officer: Marilyn K. Burton, (202) 906–6467, Office of Thrift Supervision, 1700 G Street, NW., Washington, DC 20552.

OMB Reviewer: Mark Menchik, (202) 395–3176, Office of Management and Budget, Room 10236, New Executive Office Building, Washington, DC 20503.

Dated: December 9, 2004.
By the Office of Thrift Supervision.

Richard M. Riccobono,

Deputy Director.

[FR Doc. 04–27383 Filed 12–14–04; 8:45 am]

BILLING CODE 6720–01–P

DEPARTMENT OF THE TREASURY

Office of Thrift Supervision

Proposed Agency Information Collection Activities; Comment Request—Electronic Operations

AGENCY: Office of Thrift Supervision (OTS), Treasury.

ACTION: Notice and request for comment.

SUMMARY: The Department of the Treasury, as part of its continuing effort to reduce paperwork and respondent burden, invites the general public and other Federal agencies to comment on proposed and continuing information collections, as required by the Paperwork Reduction Act of 1995, 44 U.S.C. 3507. The Office of Thrift Supervision within the Department of the Treasury will submit the proposed information collection requirement described below to the Office of Management and Budget (OMB) for review, as required by the Paperwork Reduction Act. Today, OTS is soliciting public comments on its proposal to reinstate this information collection.

DATES: Submit written comments on or before February 14, 2005.

ADDRESSES: Send comments, referring to the collection by title of the proposal or by OMB approval number, to Information Collection Comments, Chief Counsel's Office, Office of Thrift Supervision, 1700 G Street, NW., Washington, DC 20552; send a facsimile transmission to (202) 906–6518; or send an e-mail to *infocollection.comments@ots.treas.gov.* OTS will post comments and the related index on the OTS Internet site at *http://www.ots.treas.gov.* In addition, interested persons may inspect comments at the Public Reading Room, 1700 G Street, NW., by appointment. To

make an appointment, call (202) 906–5922, send an e-mail to *publicinfo@ots.treas.gov,* or send a facsimile transmission to (202) 906–7755.

FOR FURTHER INFORMATION CONTACT: You can request additional information about this proposed information collection from Marilyn K. Burton, Senior Paralegal (Regulations), (202) 906–6467, Office of Thrift Supervision, 1700 G Street, NW., Washington, DC 20552.

SUPPLEMENTARY INFORMATION: OTS may not conduct or sponsor an information collection, and respondents are not required to respond to an information collection, unless the information collection displays a currently valid OMB control number. As part of the approval process, we invite comments on the following information collection.

Comments should address one or more of the following points:

a. Whether the proposed collection of information is necessary for the proper performance of the functions of OTS;

b. The accuracy of OTS's estimate of the burden of the proposed information collection;

c. Ways to enhance the quality, utility, and clarity of the information to be collected;

d. Ways to minimize the burden of the information collection on respondents, including through the use of information technology.

We will summarize the comments that we receive and include them in the OTS request for OMB approval. All comments will become a matter of public record. In this notice, OTS is soliciting comments concerning the following information collection.

Title of Proposal: Electronic Operations.

OMB Number: 1550–0095.

Form Number: N/A.

Regulation requirement: 12 CFR part 555.

Description: This information collection is needed to evaluate a thrift's risks in the use of information technology so that any safety and soundness concerns may be addressed in a timely manner.

Type of Review: Reinstatement.

Affected Public: Savings Associations.

Estimated Number of Respondents: 88.

Estimated Burden Hours per Response: 2 hours.

Estimated Frequency of Response: Event-generated.

Estimated Total Burden: 176 hours.

Clearance Officer: Marilyn K. Burton, (202) 906–6467, Office of Thrift Supervision, 1700 G Street, NW., Washington, DC 20552.

OMB Reviewer: Mark Menchik, (202) 395–3176, Office of Management and Budget, Room 10236, New Executive Office Building, Washington, DC 20503.

Dated: December 9, 2004.

By the Office of Thrift Supervision.

Richard M. Riccobono,

Deputy Director.

[FR Doc. 04–27384 Filed 12–14–04; 8:45 am]

BILLING CODE 6720–01–P

DEPARTMENT OF THE TREASURY

Office of Thrift Supervision

Proposed Agency Information Collection Activities; Comment Request—Procedures for Monitoring Bank Secrecy Act

AGENCY: Office of Thrift Supervision (OTS), Treasury.

ACTION: Notice and request for comment.

SUMMARY: The Department of the Treasury, as part of its continuing effort to reduce paperwork and respondent burden, invites the general public and other Federal agencies to comment on proposed and continuing information collections, as required by the Paperwork Reduction Act of 1995, 44 U.S.C. 3507. The Office of Thrift Supervision within the Department of the Treasury will submit the proposed information collection requirement described below to the Office of Management and Budget (OMB) for review, as required by the Paperwork Reduction Act. Today, OTS is soliciting public comments on its proposal to extend this information collection.

DATES: Submit written comments on or before February 14, 2005.

ADDRESSES: Send comments, referring to the collection by title of the proposal or by OMB approval number, to Information Collection Comments, Chief Counsel's Office, Office of Thrift Supervision, 1700 G Street, NW., Washington, DC 20552; send a facsimile transmission to (202) 906–6518; or send an e-mail to *infocollection.comments@ots.treas.gov.* OTS will post comments and the related index on the OTS Internet site at *http://www.ots.treas.gov.* In addition, interested persons may inspect comments at the Public Reading Room, 1700 G Street, NW., by appointment. To make an appointment, call (202) 906–5922, send an e-mail to *publicinfo@ots.treas.gov,* or send a facsimile transmission to (202) 906–7755.

FOR FURTHER INFORMATION CONTACT: You can request additional information about this proposed information collection from Tim Leary, Consumer Protection and Specialized Programs, (202) 906–7170, Office of Thrift Supervision, 1700 G Street, NW., Washington, DC 20552.

SUPPLEMENTARY INFORMATION: OTS may not conduct or sponsor an information collection, and respondents are not required to respond to an information collection, unless the information collection displays a currently valid OMB control number. As part of the approval process, we invite comments on the following information collection.

Comments should address one or more of the following points:

a. Whether the proposed collection of information is necessary for the proper performance of the functions of OTS;

b. The accuracy of OTS's estimate of the burden of the proposed information collection;

c. Ways to enhance the quality, utility, and clarity of the information to be collected;

d. Ways to minimize the burden of the information collection on respondents, including through the use of information technology.

We will summarize the comments that we receive and include them in the OTS request for OMB approval. All comments will become a matter of public record. In this notice, OTS is soliciting comments concerning the following information collection.

Title of Proposal: Procedures for Monitoring Bank Secrecy Act.

OMB Number: 1550–0041.

Form Number: N/A.

Regulation requirement: 12 CFR 563.177.

Description: This report enables OTS to determine whether a savings association has implemented a program reasonably designed to assure and monitor compliance with the currency recordkeeping and reporting requirements established by Federal Statute and the U.S. Department of Treasury regulations.

Type of Review: Renewal.

Affected Public: Savings Associations.

Estimated Number of Respondents: 891.

Estimated Burden Hours per Response: 2 hours.

Estimated Frequency of Response: Annually.

Estimated Total Burden: 1,782 hours.

Clearance Officer: Marilyn K. Burton, (202) 906–6467, Office of Thrift Supervision, 1700 G Street, NW., Washington, DC 20552.

OMB Reviewer: Mark Menchik, (202) 395–3176, Office of Management and Budget, Room 10236, New Executive Office Building, Washington, DC 20503.

Dated: December 9, 2004.
By the Office of Thrift Supervision.

Richard M. Riccobono,

Deputy Director.

[FR Doc. 04–27397 Filed 12–14–04; 8:45 am]

BILLING CODE 6720–01–P

DEPARTMENT OF THE TREASURY

Office of Thrift Supervision

Proposed Agency Information Collection Activities; Comment Request—Minority Thrift Certification Form

AGENCY: Office of Thrift Supervision (OTS), Treasury.

ACTION: Notice and request for comment.

SUMMARY: The Department of the Treasury, as part of its continuing effort to reduce paperwork and respondent burden, invites the general public and other Federal agencies to comment on proposed and continuing information collections, as required by the Paperwork Reduction Act of 1995, 44 U.S.C. 3507. The Office of Thrift Supervision within the Department of the Treasury will submit the proposed information collection requirement described below to the Office of Management and Budget (OMB) for review, as required by the Paperwork Reduction Act. Today, OTS is soliciting public comments on its proposal to extend this information collection.

DATES: Submit written comments on or before February 14, 2005.

ADDRESSES: Send comments, referring to the collection by title of the proposal or by OMB approval number, to Information Collection Comments, Chief Counsel's Office, Office of Thrift Supervision, 1700 G Street, NW., Washington, DC 20552; send a facsimile transmission to (202) 906–6518; or send an e-mail to *infocollection.comments@ots.treas.gov.* OTS will post comments and the related index on the OTS Internet Site at *http://www.ots.treas.gov.* In addition, interested persons may inspect comments at the Public Reading Room, 1700 G Street, NW., by appointment. To make an appointment, call (202) 906–5922, send an e-mail to *publicinfo@ots.treas.gov,* or send a facsimile transmission to (202) 906–7755.

FOR FURTHER INFORMATION CONTACT: You can request additional information about this proposed information collection from Louise Batdorf, Analyst, Consumer Protection and Specialized Programs, (202) 906–7087, Office of Thrift Supervision, 1700 G Street, NW., Washington, DC 20552.

SUPPLEMENTARY INFORMATION: OTS may not conduct or sponsor an information collection, and respondents are not required to respond to an information collection, unless the information collection displays a currently valid OMB control number. As part of the approval process, we invite comments on the following information collection.

Comments should address one or more of the following points:

a. Whether the proposed collection of information is necessary for the proper performance of the functions of OTS;

b. The accuracy of OTS's estimate of the burden of the proposed information collection;

c. Ways to enhance the quality, utility, and clarity of the information to be collected;

d. Ways to minimize the burden of the information collection on respondents, including through the use of information technology.

We will summarize the comments that we receive and include them in the OTS request for OMB approval. All comments will become a matter of public record. In this notice, OTS is soliciting comments concerning the following information collection.

Title of Proposal: Minority Thrift Certification Form.

OMB Number: 1550–0096.

Form Number: OTS Form 1661.

Regulation requirement: N/A.

Description: This information is needed to help OTS maintain a reliable source of information regarding the universe of minority-owned thrifts, in accordance with our responsibilities under Section 308 of FIRREA.

Type of Review: Renewal.

Affected Public: Savings Associations.

Estimated Number of Respondents: 26.

Estimated Burden Hours per Response: .5 hours.

Estimated Frequency of Response: Annually.

Estimated Total Burden: 13 hours.

Clearance Officer: Marilyn K. Burton, (202) 906–6467, Office of Thrift Supervision, 1700 G Street, NW., Washington, DC 20552.

OMB Reviewer: Mark Menchik, (202) 395–3176, Office of Management and Budget, Room 10236, New Executive Office Building, Washington, DC 20503.

Dated: December 9, 2004.
By the Office of Thrift Supervision.

James E. Gilleran,

Director.

[FR Doc. 04–27398 Filed 12–14–04; 8:45 am]

BILLING CODE 6720–01–P

DEPARTMENT OF VETERANS AFFAIRS

Reasonable Charges for Inpatient DRG and SNF Medical Services; 2005 Calendar Year Update

AGENCY: Department of Veterans Affairs.

ACTION: Notice.

SUMMARY: Section 17.101 of Title 38 of the Code of Federal Regulations sets forth the Department of Veterans Affairs (VA) medical regulations concerning ''reasonable charges'' for medical care or services provided or furnished by VA to a veteran:

- For a nonservice-connected disability for which the veteran is entitled to care (or the payment of expenses of care) under a health plan contract;
- For a nonservice-connected disability incurred incident to the veteran's employment and covered under a worker's compensation law or plan that provides reimbursement or indemnification for such care and services; or
- For a nonservice-connected disability incurred as a result of a motor vehicle accident in a State that requires automobile accident reparations insurance.

The regulations include methodologies for establishing billed amounts for the following types of charges: Acute inpatient facility charges; skilled nursing facility/sub-acute inpatient facility charges; partial hospitalization facility charges; outpatient facility charges; physician and other professional charges, including professional charges for anesthesia services and dental services; pathology and laboratory charges; observation care facility charges; ambulance and other emergency transportation charges; and charges for durable medical equipment, drugs, injectables, and other medical services, items, and supplies identified by Healthcare Common Procedure Coding System (HCPCS) Level II codes. The regulations also provide that data for calculating actual charge amounts at individual VA facilities based on these methodologies will either be published in a notice in the **Federal Register** or will be posted on the Internet site of the Veterans Health Administration Chief Business Office, currently at *http://www.va.gov/cbo,* under ''Charge Data.'' Certain of these charges are hereby updated as described in the **SUPPLEMENTARY INFORMATION** section of this notice. These changes are effective on January 1, 2005.

When charges for medical care or services provided or furnished at VA

expense by either VA or non-VA providers have not been established under other provisions of the regulations, the method for determining VA's charges is set forth at 38 CFR 17.101(a)(8).

FOR FURTHER INFORMATION CONTACT: Romona Greene, Chief Business Office (168), Veterans Health Administration, Department of Veterans Affairs, 810 Vermont Avenue, NW., Washington, DC 20420, (202) 254–0361. (This is not a toll free number.)

SUPPLEMENTARY INFORMATION: Of the charge types listed in the Summary section of this notice, only the acute inpatient facility charges and skilled nursing facility/sub-acute inpatient facility charges are being changed. Charges for the following charge types: Partial hospitalization facility charges; outpatient facility charges; physician and other professional charges, including professional charges for anesthesia services and dental services; pathology and laboratory charges; observation care facility charges; ambulance and other emergency transportation charges; and charges for durable medical equipment, drugs, injectables, and other medical services, items, and supplies identified by HCPCS Level II codes are not being changed. These Outpatient facility charges and Professional charges remain the same as set forth in a notice published in the **Federal Register** on April 15, 2004 (69 FR 20118).

Based on the methodologies set forth in 38 CFR 17.101, this document provides an update to acute inpatient charges based on 2005 DRGs. Acute inpatient facility charges by diagnosis related group (DRG) are set forth in Table A in the December 19, 2003, **Federal Register** notice. Table A in the December 19 notice document is being replaced by Table A in this notice, which provides updated charges based on 2005 DRGs.

Also, this document provides for an updated skilled nursing facility/sub-acute inpatient facility all-inclusive *per diem* charge that, using the methodologies set forth in 38 CFR 17.101, is adjusted by a geographic area factor based on the location where the care is provided. The skilled nursing facility/sub-acute inpatient facility *per diem* charge is set forth in Table B in the October 2, 2003, **Federal Register** notice. Table B in the October 2 notice document is being replaced by Table B in this notice, which provides the updated all-inclusive nationwide skilled nursing facility/sub-acute inpatient facility *per diem* charge.

The charges in this update for acute inpatient facility and skilled nursing facility/sub-acute inpatient facility services are effective on January 1, 2005.

In this update, we are retaining the table designations used for acute inpatient facility charges by DRGs in the notice published in the **Federal Register** on December 19, 2003 (68 FR 70867). We also are retaining the table designation used for skilled nursing facility/sub-acute inpatient facility charges in the notice published in the **Federal Register** on October 2, 2003 (68 FR 56892). Accordingly, the tables identified as being updated by this notice correspond to the applicable tables published in the December 19 and October 2 notices, beginning with Table A through Table B.

We have updated the list of data sources presented in Supplementary Table 1 to reflect the updated data sources used to establish the updated charges described in this notice.

We have also updated the list of VA medical facility locations. As a reminder, in Supplementary Table 3 published in the **Federal Register** dated April 15, 2004, we set forth the list of VA medical facility locations, which includes their three-digit ZIP Codes and provider-based/non-provider-based designations. In accordance with the final rule, subsequent updates to Supplementary Table 3 will be posted on the Internet site of the Veterans Health Administration Chief Business Office.

Consistent with the regulations, the updated data tables and supplementary tables containing the changes described in this notice are published with this notice and will be posted on the Internet site of the Veterans Health Administration Chief Business Office, currently at *http://www.va.gov/cbo,* under ''Charge Data.''

Approved: November 30, 2004.

Anthony J. Principi,

Secretary of Veterans Affairs.

BILLING CODE 8320–01–P

TABLE A. — ACUTE INPATIENT FACILITY NATIONWIDE PER DIEM CHARGES BY DRG (DIAGNOSIS RELATED GROUP)

PAGE 1 OF 8

DRG	Description	Surgical /Non-Surgical Indicator	Per Diem Charge		
			Standard Room and Board	ICU Room and Board	Ancillary
001	CRANIOTOMY AGE >17 W CC	S	$1,334.75	$2,824.66	$5,338.02
002	CRANIOTOMY AGE >17 W/O CC	S	$1,387.57	$2,998.01	$7,795.10
003	CRANIOTOMY AGE 0-17	S	$1,499.29	$3,220.43	$6,500.63
006	CARPAL TUNNEL RELEASE	S	$1,120.95	$2,095.33	$3,921.19
007	PERIPH & CRANIAL NERVE & OTHER NERV SYST PROC W CC	S	$1,246.64	$2,402.02	$3,717.34
008	PERIPH & CRANIAL NERVE & OTHER NERV SYST PROC W/O CC	S	$1,316.90	$2,703.14	$10,999.87
009	SPINAL DISORDERS & INJURIES	N	$1,040.70	$2,755.20	$1,726.04
010	NERVOUS SYSTEM NEOPLASMS W CC	N	$1,292.24	$2,578.47	$2,447.58
011	NERVOUS SYSTEM NEOPLASMS W/O CC	N	$1,275.63	$2,466.05	$2,830.69
012	DEGENERATIVE NERVOUS SYSTEM DISORDERS	N	$1,168.50	$2,068.14	$1,085.40
013	MULTIPLE SCLEROSIS & CEREBELLAR ATAXIA	N	$1,228.72	$2,280.59	$1,892.20
014	INTRACRANIAL HEMORRHAGE & STROKE W INFARCT	N	$1,124.77	$2,306.88	$2,587.27
015	NONSPECIFIC CVA & PRECEREBRAL OCCLUSION W/O INFARCT	N	$950.24	$2,013.69	$2,250.28
016	NONSPECIFIC CEREBROVASCULAR DISORDERS W CC	N	$1,089.58	$2,021.88	$2,404.88
017	NONSPECIFIC CEREBROVASCULAR DISORDERS W/O CC	N	$1,155.28	$2,086.62	$2,515.07
018	CRANIAL & PERIPHERAL NERVE DISORDERS W CC	N	$1,099.54	$2,021.53	$2,248.07
019	CRANIAL & PERIPHERAL NERVE DISORDERS W/O CC	N	$1,237.56	$2,389.46	$2,615.53
020	NERVOUS SYSTEM INFECTION EXCEPT VIRAL MENINGITIS	N	$1,145.04	$2,475.29	$3,338.16
021	VIRAL MENINGITIS	N	$1,126.81	$2,287.76	$3,320.89
022	HYPERTENSIVE ENCEPHALOPATHY	N	$1,064.29	$2,072.18	$2,740.64
023	NONTRAUMATIC STUPOR & COMA	N	$1,277.93	$2,446.35	$2,625.93
024	SEIZURE & HEADACHE AGE >17 W CC	N	$1,190.35	$2,214.25	$2,583.04
025	SEIZURE & HEADACHE AGE >17 W/O CC	N	$1,301.20	$2,338.43	$2,651.55
026	SEIZURE & HEADACHE AGE 0-17	N	$1,840.74	$4,248.04	$4,883.70
027	TRAUMATIC STUPOR & COMA, COMA >1 HR	N	$1,248.99	$2,975.25	$3,348.90
028	TRAUMATIC STUPOR & COMA, COMA <1 HR AGE >17 W CC	N	$1,266.87	$2,877.03	$2,665.42
029	TRAUMATIC STUPOR & COMA, COMA <1 HR AGE >17 W/O CC	N	$1,207.45	$2,856.94	$2,285.54
030	TRAUMATIC STUPOR & COMA, COMA <1 HR AGE 0-17	N	$974.88	$2,123.41	$1,837.60
031	CONCUSSION AGE >17 W CC	N	$1,255.17	$2,849.20	$3,088.63
032	CONCUSSION AGE >17 W/O CC	N	$1,402.07	$2,864.05	$3,383.19
033	CONCUSSION AGE 0-17	N	$1,503.24	$2,976.09	$3,127.07
034	OTHER DISORDERS OF NERVOUS SYSTEM W CC	N	$1,103.54	$2,438.63	$2,165.00
035	OTHER DISORDERS OF NERVOUS SYSTEM W/O CC	N	$1,143.00	$2,412.74	$2,037.54
036	RETINAL PROCEDURES	S	$2,779.66	$3,708.89	$14,238.27
037	ORBITAL PROCEDURES	S	$1,631.23	$3,730.04	$5,978.22
038	PRIMARY IRIS PROCEDURES	S	$1,495.06	$1,701.23	$3,404.93
039	LENS PROCEDURES WITH OR WITHOUT VITRECTOMY	S	$1,771.59	$3,014.72	$4,854.34
040	EXTRAOCULAR PROCEDURES EXCEPT ORBIT AGE >17	S	$1,744.63	$2,692.15	$4,474.56
041	EXTRAOCULAR PROCEDURES EXCEPT ORBIT AGE 0-17	S	$1,263.18	$2,361.44	$3,764.62
042	INTRAOCULAR PROCEDURES EXCEPT RETINA, IRIS & LENS	S	$1,811.34	$3,725.90	$6,281.41
043	HYPHEMA	N	$1,693.32	$3,587.85	$2,273.40
044	ACUTE MAJOR EYE INFECTIONS	N	$1,339.75	$3,852.09	$1,730.27
045	NEUROLOGICAL EYE DISORDERS	N	$1,277.26	$1,782.43	$3,136.83
046	OTHER DISORDERS OF THE EYE AGE >17 W CC	N	$1,182.29	$2,292.54	$2,079.80
047	OTHER DISORDERS OF THE EYE AGE >17 W/O CC	N	$1,301.30	$1,635.41	$1,915.79
048	OTHER DISORDERS OF THE EYE AGE 0-17	N	$1,183.71	$1,966.26	$1,909.94
049	MAJOR HEAD & NECK PROCEDURES	S	$1,463.90	$3,113.04	$8,438.64
050	SIALOADENECTOMY	S	$1,578.90	$2,957.76	$9,861.45
051	SALIVARY GLAND PROCEDURES EXCEPT SIALOADENECTOMY	S	$1,394.91	$3,183.73	$6,325.91
052	CLEFT LIP & PALATE REPAIR	S	$1,963.19	$3,119.18	$8,496.37
053	SINUS & MASTOID PROCEDURES AGE >17	S	$1,345.46	$2,672.59	$6,405.46
054	SINUS & MASTOID PROCEDURES AGE 0-17	S	$1,107.34	$2,400.18	$5,290.74
055	MISCELLANEOUS EAR, NOSE, MOUTH & THROAT PROCEDURES	S	$1,256.30	$2,534.32	$5,798.87
056	RHINOPLASTY	S	$1,363.14	$3,021.29	$6,223.73
057	T&A PROC, EXCEPT TONSILLECTOMY &/OR ADENOIDECTOMY ONLY, AGE >17	S	$1,215.17	$2,446.72	$4,513.03
058	T&A PROC, EXCEPT TONSILLECTOMY &/OR ADENOIDECTOMY ONLY, AGE 0-17	S	$1,204.23	$2,562.45	$4,252.47
059	TONSILLECTOMY &/OR ADENOIDECTOMY ONLY, AGE >17	S	$1,166.13	$1,665.66	$5,064.69
060	TONSILLECTOMY &/OR ADENOIDECTOMY ONLY, AGE 0-17	S	$1,056.31	$3,810.34	$5,964.40
061	MYRINGOTOMY W TUBE INSERTION AGE >17	S	$1,546.68	$2,226.79	$5,247.06
062	MYRINGOTOMY W TUBE INSERTION AGE 0-17	S	$1,366.87	$2,483.83	$3,906.37
063	OTHER EAR, NOSE, MOUTH & THROAT O.R. PROCEDURES	S	$1,522.99	$3,039.78	$5,790.00
064	EAR, NOSE, MOUTH & THROAT MALIGNANCY	N	$1,445.47	$2,716.08	$2,635.88
065	DYSEQUILIBRIUM	N	$1,226.17	$2,122.34	$2,730.28
066	EPISTAXIS	N	$1,183.27	$2,228.84	$2,365.89
067	EPIGLOTTITIS	N	$1,142.84	$3,328.42	$3,115.43
068	OTITIS MEDIA & URI AGE >17 W CC	N	$1,051.96	$1,945.69	$2,363.71

TABLE A. — ACUTE INPATIENT FACILITY NATIONWIDE PER DIEM CHARGES BY DRG (DIAGNOSIS RELATED GROUP)

PAGE 2 OF 8

DRG	Description	Surgical/ Non-Surgical Indicator	Per Diem Charge		
			Standard Room and Board	ICU Room and Board	Ancillary
069	OTITIS MEDIA & URI AGE >17 W/O CC	N	$1,112.37	$2,317.53	$2,338.68
070	OTITIS MEDIA & URI AGE 0-17	N	$1,902.52	$3,392.12	$3,922.46
071	LARYNGOTRACHEITIS	N	$856.56	$1,664.88	$1,954.47
072	NASAL TRAUMA & DEFORMITY	N	$1,284.00	$2,392.29	$2,708.33
073	OTHER EAR, NOSE, MOUTH & THROAT DIAGNOSES AGE >17	N	$1,148.77	$2,222.07	$2,281.42
074	OTHER EAR, NOSE, MOUTH & THROAT DIAGNOSES AGE 0-17	N	$1,620.60	$3,165.67	$3,109.14
075	MAJOR CHEST PROCEDURES	S	$1,478.57	$2,737.08	$5,331.00
076	OTHER RESP SYSTEM O.R. PROCEDURES W CC	S	$1,210.94	$2,279.38	$3,443.59
077	OTHER RESP SYSTEM O.R. PROCEDURES W/O CC	S	$1,306.11	$2,222.40	$3,890.33
078	PULMONARY EMBOLISM	N	$1,015.99	$1,859.25	$2,429.33
079	RESPIRATORY INFECTIONS & INFLAMMATIONS AGE >17 W CC	N	$1,085.27	$1,988.75	$2,389.04
080	RESPIRATORY INFECTIONS & INFLAMMATIONS AGE >17 W/O CC	N	$997.12	$1,931.12	$1,848.94
081	RESPIRATORY INFECTIONS & INFLAMMATIONS AGE 0-17	N	$1,152.34	$2,082.35	$2,464.61
082	RESPIRATORY NEOPLASMS	N	$1,158.29	$2,051.37	$2,611.08
083	MAJOR CHEST TRAUMA W CC	N	$1,073.80	$2,059.38	$2,230.04
084	MAJOR CHEST TRAUMA W/O CC	N	$1,226.09	$2,581.46	$2,176.64
085	PLEURAL EFFUSION W CC	N	$1,086.35	$1,921.70	$2,438.81
086	PLEURAL EFFUSION W/O CC	N	$1,228.81	$2,153.07	$2,805.25
087	PULMONARY EDEMA & RESPIRATORY FAILURE	N	$915.48	$1,872.73	$2,273.62
088	CHRONIC OBSTRUCTIVE PULMONARY DISEASE	N	$958.41	$1,798.17	$2,055.15
089	SIMPLE PNEUMONIA & PLEURISY AGE >17 W CC	N	$1,001.47	$1,843.11	$2,120.22
090	SIMPLE PNEUMONIA & PLEURISY AGE >17 W/O CC	N	$995.34	$1,856.11	$1,868.93
091	SIMPLE PNEUMONIA & PLEURISY AGE 0-17	N	$1,791.26	$3,828.91	$3,649.97
092	INTERSTITIAL LUNG DISEASE W CC	N	$1,105.32	$2,024.34	$2,518.66
093	INTERSTITIAL LUNG DISEASE W/O CC	N	$1,141.18	$1,896.47	$2,491.01
094	PNEUMOTHORAX W CC	N	$994.91	$1,922.26	$2,248.09
095	PNEUMOTHORAX W/O CC	N	$1,102.39	$2,120.41	$2,184.15
096	BRONCHITIS & ASTHMA AGE >17 W CC	N	$1,006.29	$1,877.69	$2,088.86
097	BRONCHITIS & ASTHMA AGE >17 W/O CC	N	$1,013.00	$1,814.24	$1,983.67
098	BRONCHITIS & ASTHMA AGE 0-17	N	$947.54	$3,521.09	$3,314.35
099	RESPIRATORY SIGNS & SYMPTOMS W CC	N	$1,079.15	$1,966.08	$2,936.20
100	RESPIRATORY SIGNS & SYMPTOMS W/O CC	N	$1,112.42	$1,926.31	$3,494.73
101	OTHER RESPIRATORY SYSTEM DIAGNOSES W CC	N	$1,094.15	$1,993.60	$2,552.56
102	OTHER RESPIRATORY SYSTEM DIAGNOSES W/O CC	N	$1,122.90	$1,921.37	$2,741.66
103	HEART TRANSPLANT	S	$1,326.04	$3,681.20	$10,920.04
104	CARDIAC VALVE & OTH MAJOR CARDIOTHORACIC PROC W CARD CATH	S	$1,688.30	$2,948.23	$9,964.37
105	CARDIAC VALVE & OTH MAJOR CARDIOTHORACIC PROC W/O CARD CATH	S	$1,572.14	$2,930.73	$11,068.50
106	CORONARY BYPASS W PTCA	S	$1,201.83	$2,380.63	$11,492.20
107	CORONARY BYPASS W CARDIAC CATH	S	$1,250.07	$2,213.68	$8,326.51
108	OTHER CARDIOTHORACIC PROCEDURES	S	$1,444.54	$2,595.03	$9,490.41
109	CORONARY BYPASS W/O PTCA OR CARDIAC CATH	S	$1,243.16	$2,290.72	$8,446.92
110	MAJOR CARDIOVASCULAR PROCEDURES W CC	S	$1,260.58	$2,414.93	$7,268.24
111	MAJOR CARDIOVASCULAR PROCEDURES W/O CC	S	$1,324.40	$2,568.93	$13,003.27
113	AMPUTATION FOR CIRC SYSTEM DISORDERS EXCEPT UPPER LIMB & TOE	S	$1,082.77	$2,094.02	$2,872.69
114	UPPER LIMB & TOE AMPUTATION FOR CIRC SYSTEM DISORDERS	S	$1,219.58	$2,253.28	$2,664.84
115	PRM CARD PACEM IMPL W AMI/HR/SHOCK OR AICD LEAD OR GNRTR	S	$1,502.40	$2,523.70	$9,507.76
116	OTHER PERMANENT CARDIAC PACEMAKER IMPLANT	S	$1,292.68	$2,076.38	$8,935.04
117	CARDIAC PACEMAKER REVISION EXCEPT DEVICE REPLACEMENT	S	$1,144.95	$1,956.27	$4,275.15
118	CARDIAC PACEMAKER DEVICE REPLACEMENT	S	$1,767.53	$2,557.43	$11,094.70
119	VEIN LIGATION & STRIPPING	S	$1,478.87	$2,911.49	$3,799.88
120	OTHER CIRCULATORY SYSTEM O.R. PROCEDURES	S	$1,373.38	$2,502.45	$3,877.51
121	CIRCULATORY DISORDERS W AMI & MAJOR COMP, DISCHARGED ALIVE	N	$1,161.58	$2,072.56	$2,908.63
122	CIRCULATORY DISORDERS W AMI W/O MAJOR COMP, DISCHARGED ALIVE	N	$1,128.89	$2,080.79	$3,612.75
123	CIRCULATORY DISORDERS W AMI, EXPIRED	N	$1,230.38	$2,379.56	$4,299.79
124	CIRCULATORY DISORDERS EXCEPT AMI, W CARD CATH & COMPLEX DIAG	N	$1,278.33	$2,069.47	$4,941.52
125	CIRCULATORY DISORDERS EXCEPT AMI, W CARD CATH W/O COMPLEX DIAG	N	$1,228.91	$1,918.16	$6,480.14
126	ACUTE & SUBACUTE ENDOCARDITIS	N	$1,295.02	$2,251.17	$2,729.48
127	HEART FAILURE & SHOCK	N	$1,072.24	$1,947.31	$2,246.52
128	DEEP VEIN THROMBOPHLEBITIS	N	$1,046.09	$1,881.26	$1,446.66
129	CARDIAC ARREST, UNEXPLAINED	N	$996.24	$2,321.25	$5,303.09
130	PERIPHERAL VASCULAR DISORDERS W CC	N	$1,105.26	$2,126.34	$1,930.52
131	PERIPHERAL VASCULAR DISORDERS W/O CC	N	$1,020.08	$1,931.91	$1,499.90
132	ATHEROSCLEROSIS W CC	N	$1,042.82	$1,959.77	$2,543.15
133	ATHEROSCLEROSIS W/O CC	N	$1,142.12	$2,053.04	$2,195.98
134	HYPERTENSION	N	$1,029.76	$1,783.83	$2,137.02
135	CARDIAC CONGENITAL & VALVULAR DISORDERS AGE >17 W CC	N	$1,208.31	$2,214.21	$2,289.77

TABLE A. — ACUTE INPATIENT FACILITY NATIONWIDE PER DIEM CHARGES BY DRG (DIAGNOSIS RELATED GROUP)

PAGE 3 OF 8

DRG	Description	Surgical/ Non-Surgical Indicator	Per Diem Charge		
			Standard Room and Board	ICU Room and Board	Ancillary
136	CARDIAC CONGENITAL & VALVULAR DISORDERS AGE >17 W/O CC	N	$1,315.92	$2,402.70	$2,336.84
137	CARDIAC CONGENITAL & VALVULAR DISORDERS AGE 0-17	N	$1,175.87	$2,174.88	$2,137.20
138	CARDIAC ARRHYTHMIA & CONDUCTION DISORDERS W CC	N	$1,119.47	$1,875.70	$2,437.63
139	CARDIAC ARRHYTHMIA & CONDUCTION DISORDERS W/O CC	N	$1,182.20	$1,935.07	$2,569.37
140	ANGINA PECTORIS	N	$966.19	$1,856.91	$2,595.46
141	SYNCOPE & COLLAPSE W CC	N	$1,300.52	$2,122.59	$2,682.48
142	SYNCOPE & COLLAPSE W/O CC	N	$1,407.65	$2,250.25	$3,028.69
143	CHEST PAIN	N	$1,224.11	$1,996.27	$3,788.72
144	OTHER CIRCULATORY SYSTEM DIAGNOSES W CC	N	$1,156.95	$2,109.12	$2,874.54
145	OTHER CIRCULATORY SYSTEM DIAGNOSES W/O CC	N	$1,152.42	$2,105.62	$2,608.26
146	RECTAL RESECTION W CC	S	$1,188.57	$2,359.69	$3,912.33
147	RECTAL RESECTION W/O CC	S	$1,233.18	$2,639.03	$4,050.96
148	MAJOR SMALL & LARGE BOWEL PROCEDURES W CC	S	$1,088.53	$2,262.28	$3,924.59
149	MAJOR SMALL & LARGE BOWEL PROCEDURES W/O CC	S	$1,119.81	$2,313.94	$3,612.75
150	PERITONEAL ADHESIOLYSIS W CC	S	$1,083.10	$2,242.75	$3,626.64
151	PERITONEAL ADHESIOLYSIS W/O CC	S	$1,078.78	$2,274.94	$3,656.43
152	MINOR SMALL & LARGE BOWEL PROCEDURES W CC	S	$1,114.30	$2,383.09	$3,314.79
153	MINOR SMALL & LARGE BOWEL PROCEDURES W/O CC	S	$1,105.27	$2,171.94	$3,167.72
154	STOMACH, ESOPHAGEAL & DUODENAL PROCEDURES AGE >17 W CC	S	$1,165.59	$2,522.15	$4,587.29
155	STOMACH, ESOPHAGEAL & DUODENAL PROCEDURES AGE >17 W/O CC	S	$1,031.80	$2,231.82	$4,945.81
156	STOMACH, ESOPHAGEAL & DUODENAL PROCEDURES AGE 0-17	S	$2,005.65	$3,256.55	$5,583.67
157	ANAL & STOMAL PROCEDURES W CC	S	$1,086.99	$2,153.32	$3,213.31
158	ANAL & STOMAL PROCEDURES W/O CC	S	$1,017.30	$1,942.21	$3,728.13
159	HERNIA PROCEDURES EXCEPT INGUINAL & FEMORAL AGE >17 W CC	S	$1,101.89	$2,178.42	$4,104.31
160	HERNIA PROCEDURES EXCEPT INGUINAL & FEMORAL AGE >17 W/O CC	S	$1,117.88	$2,036.00	$5,032.92
161	INGUINAL & FEMORAL HERNIA PROCEDURES AGE >17 W CC	S	$1,186.26	$2,271.82	$4,030.55
162	INGUINAL & FEMORAL HERNIA PROCEDURES AGE >17 W/O CC	S	$1,291.79	$2,049.16	$5,590.03
163	HERNIA PROCEDURES AGE 0-17	S	$1,959.98	$4,471.43	$8,511.64
164	APPENDECTOMY W COMPLICATED PRINCIPAL DIAG W CC	S	$1,065.77	$2,147.27	$4,020.83
165	APPENDECTOMY W COMPLICATED PRINCIPAL DIAG W/O CC	S	$1,116.43	$2,084.41	$4,359.89
166	APPENDECTOMY W/O COMPLICATED PRINCIPAL DIAG W CC	S	$1,111.33	$2,085.41	$4,910.28
167	APPENDECTOMY W/O COMPLICATED PRINCIPAL DIAG W/O CC	S	$1,218.20	$1,975.77	$6,855.01
168	MOUTH PROCEDURES W CC	S	$1,470.49	$3,043.14	$4,529.13
169	MOUTH PROCEDURES W/O CC	S	$1,545.52	$2,888.17	$7,131.71
170	OTHER DIGESTIVE SYSTEM O.R. PROCEDURES W CC	S	$1,199.92	$2,314.95	$3,675.50
171	OTHER DIGESTIVE SYSTEM O.R. PROCEDURES W/O CC	S	$1,130.72	$2,337.78	$4,285.25
172	DIGESTIVE MALIGNANCY W CC	N	$1,319.21	$2,420.58	$2,631.48
173	DIGESTIVE MALIGNANCY W/O CC	N	$1,415.58	$2,526.23	$2,858.12
174	G.I. HEMORRHAGE W CC	N	$1,077.07	$2,119.66	$2,618.99
175	G.I. HEMORRHAGE W/O CC	N	$1,157.68	$2,159.73	$2,498.95
176	COMPLICATED PEPTIC ULCER	N	$1,139.02	$2,182.04	$2,833.62
177	UNCOMPLICATED PEPTIC ULCER W CC	N	$969.98	$1,741.34	$2,507.71
178	UNCOMPLICATED PEPTIC ULCER W/O CC	N	$1,030.68	$1,839.35	$2,872.88
179	INFLAMMATORY BOWEL DISEASE	N	$1,124.82	$2,074.11	$2,275.86
180	G.I. OBSTRUCTION W CC	N	$1,038.60	$1,973.65	$2,147.69
181	G.I. OBSTRUCTION W/O CC	N	$1,049.97	$1,956.59	$1,968.32
182	ESOPHAGITIS, GASTROENT & MISC DIGEST DISORDERS AGE >17 W CC	N	$1,017.76	$1,836.76	$2,235.05
183	ESOPHAGITIS, GASTROENT & MISC DIGEST DISORDERS AGE >17 W/O CC	N	$1,049.89	$1,752.29	$2,549.94
184	ESOPHAGITIS, GASTROENT & MISC DIGEST DISORDERS AGE 0-17	N	$1,696.02	$3,917.82	$3,940.50
185	DENTAL & ORAL DIS EXCEPT EXTRACTIONS & RESTORATIONS, AGE >17	N	$1,199.24	$2,264.38	$2,696.48
186	DENTAL & ORAL DIS EXCEPT EXTRACTIONS & RESTORATIONS, AGE 0-17	N	$1,168.80	$2,317.70	$2,388.27
187	DENTAL EXTRACTIONS & RESTORATIONS	N	$1,249.97	$1,942.70	$2,365.72
188	OTHER DIGESTIVE SYSTEM DIAGNOSES AGE >17 W CC	N	$1,197.55	$2,247.17	$2,668.88
189	OTHER DIGESTIVE SYSTEM DIAGNOSES AGE >17 W/O CC	N	$1,293.50	$2,129.58	$2,564.11
190	OTHER DIGESTIVE SYSTEM DIAGNOSES AGE 0-17	N	$1,493.90	$3,371.98	$2,690.07
191	PANCREAS, LIVER & SHUNT PROCEDURES W CC	S	$1,523.85	$3,241.27	$6,125.73
192	PANCREAS, LIVER & SHUNT PROCEDURES W/O CC	S	$1,570.40	$3,373.53	$6,780.37
193	BILIARY TRACT PROC EXCEPT ONLY CHOLECYST W OR W/O C.D.E. W CC	S	$1,215.06	$2,490.90	$4,071.50
194	BILIARY TRACT PROC EXCEPT ONLY CHOLECYST W OR W/O C.D.E. W/O CC	S	$1,229.33	$2,821.26	$4,057.18
195	CHOLECYSTECTOMY W C.D.E. W CC	S	$1,026.19	$2,121.12	$3,857.02
196	CHOLECYSTECTOMY W C.D.E. W/O CC	S	$986.27	$1,520.92	$4,074.03
197	CHOLECYSTECTOMY EXCEPT BY LAPAROSCOPE W/O C.D.E. W CC	S	$1,053.17	$2,134.88	$3,827.30
198	CHOLECYSTECTOMY EXCEPT BY LAPAROSCOPE W/O C.D.E. W/O CC	S	$963.49	$2,152.24	$3,658.40
199	HEPATOBILIARY DIAGNOSTIC PROCEDURE FOR MALIGNANCY	S	$1,502.43	$2,925.22	$4,673.98
200	HEPATOBILIARY DIAGNOSTIC PROCEDURE FOR NON-MALIGNANCY	S	$1,170.34	$2,351.49	$4,273.44
201	OTHER HEPATOBILIARY OR PANCREAS O.R. PROCEDURES	S	$1,310.17	$2,381.00	$4,000.90

TABLE A. — ACUTE INPATIENT FACILITY NATIONWIDE PER DIEM CHARGES BY DRG (DIAGNOSIS RELATED GROUP)

PAGE 4 OF 8

DRG	Description	Surgical/ Non-Surgical Indicator	Per Diem Charge		
			Standard Room and Board	ICU Room and Board	Ancillary
202	CIRRHOSIS & ALCOHOLIC HEPATITIS	N	$1,252.36	$2,457.13	$3,013.95
203	MALIGNANCY OF HEPATOBILIARY SYSTEM OR PANCREAS	N	$1,332.74	$2,521.08	$2,939.92
204	DISORDERS OF PANCREAS EXCEPT MALIGNANCY	N	$1,018.31	$1,955.96	$2,670.66
205	DISORDERS OF LIVER EXCEPT MALIG,CIRR,ALC HEPA W CC	N	$1,256.69	$2,489.49	$2,854.69
206	DISORDERS OF LIVER EXCEPT MALIG,CIRR,ALC HEPA W/O CC	N	$1,161.61	$2,622.77	$2,360.24
207	DISORDERS OF THE BILIARY TRACT W CC	N	$1,119.15	$2,071.47	$2,946.40
208	DISORDERS OF THE BILIARY TRACT W/O CC	N	$1,161.82	$1,706.59	$3,103.63
209	MAJOR JOINT & LIMB REATTACHMENT PROCEDURES OF LOWER EXTREMITY	S	$1,055.11	$2,180.31	$6,983.67
210	HIP & FEMUR PROCEDURES EXCEPT MAJOR JOINT AGE >17 W CC	S	$1,074.11	$2,112.34	$3,794.51
211	HIP & FEMUR PROCEDURES EXCEPT MAJOR JOINT AGE >17 W/O CC	S	$1,130.97	$2,217.69	$3,913.00
212	HIP & FEMUR PROCEDURES EXCEPT MAJOR JOINT AGE 0-17	S	$1,151.09	$2,225.54	$3,914.40
213	AMPUTATION FOR MUSCULOSKELETAL SYSTEM & CONN TISSUE DISORDERS	S	$1,052.83	$1,987.35	$2,774.93
216	BIOPSIES OF MUSCULOSKELETAL SYSTEM & CONNECTIVE TISSUE	S	$1,113.28	$2,123.89	$4,315.12
217	WND DEBRID & SKN GRFT EXCEPT HAND,FOR MUSCSKELET & CONN TISS DIS	S	$1,261.48	$2,606.25	$3,179.82
218	LOWER EXTREM & HUMER PROC EXCEPT HIP,FOOT,FEMUR AGE >17 W CC	S	$1,097.40	$2,136.42	$4,388.29
219	LOWER EXTREM & HUMER PROC EXCEPT HIP,FOOT,FEMUR AGE >17 W/O CC	S	$1,108.95	$2,239.29	$5,292.97
220	LOWER EXTREM & HUMER PROC EXCEPT HIP,FOOT,FEMUR AGE 0-17	S	$1,376.88	$2,848.44	$5,632.26
223	MAJOR SHOULDER/ELBOW PROC, OR OTHER UPPER EXTREMITY PROC W CC	S	$1,112.71	$2,137.99	$5,814.18
224	SHOULDER,ELBOW OR FOREARM PROC,EXC MAJOR JOINT PROC, W/O CC	S	$1,102.40	$2,103.43	$7,162.47
225	FOOT PROCEDURES	S	$1,144.92	$1,998.26	$3,174.53
226	SOFT TISSUE PROCEDURES W CC	S	$1,173.99	$2,340.53	$3,490.12
227	SOFT TISSUE PROCEDURES W/O CC	S	$1,300.84	$2,763.22	$5,850.48
228	MAJOR THUMB OR JOINT PROC,OR OTH HAND OR WRIST PROC W CC	S	$1,227.14	$2,569.94	$4,759.52
229	HAND OR WRIST PROC, EXCEPT MAJOR JOINT PROC, W/O CC	S	$1,435.82	$2,448.07	$5,530.19
230	LOCAL EXCISION & REMOVAL OF INT FIX DEVICES OF HIP & FEMUR	S	$1,105.15	$2,285.99	$3,678.72
232	ARTHROSCOPY	S	$1,161.91	$1,304.06	$4,708.05
233	OTHER MUSCULOSKELET SYS & CONN TISS O.R. PROC W CC	S	$1,083.54	$2,250.78	$3,755.28
234	OTHER MUSCULOSKELET SYS & CONN TISS O.R. PROC W/O CC	S	$1,108.48	$2,248.53	$5,889.03
235	FRACTURES OF FEMUR	N	$1,017.68	$2,357.16	$1,535.81
236	FRACTURES OF HIP & PELVIS	N	$1,010.04	$2,388.43	$1,421.16
237	SPRAINS, STRAINS, & DISLOCATIONS OF HIP, PELVIS & THIGH	N	$1,158.65	$2,454.53	$1,766.32
238	OSTEOMYELITIS	N	$1,160.60	$2,407.93	$1,765.10
239	PATHOLOGICAL FRACTURES & MUSCULOSKELETAL & CONN TISS MALIGNANCY	N	$1,123.24	$2,138.65	$1,853.12
240	CONNECTIVE TISSUE DISORDERS W CC	N	$1,146.34	$2,318.74	$2,654.24
241	CONNECTIVE TISSUE DISORDERS W/O CC	N	$1,266.56	$2,495.53	$2,189.69
242	SEPTIC ARTHRITIS	N	$1,098.84	$2,080.41	$1,769.73
243	MEDICAL BACK PROBLEMS	N	$1,039.17	$2,088.16	$1,767.50
244	BONE DISEASES & SPECIFIC ARTHROPATHIES W CC	N	$960.74	$2,201.31	$1,299.64
245	BONE DISEASES & SPECIFIC ARTHROPATHIES W/O CC	N	$948.51	$2,190.75	$1,014.96
246	NON-SPECIFIC ARTHROPATHIES	N	$987.92	$2,156.90	$1,185.52
247	SIGNS & SYMPTOMS OF MUSCULOSKELETAL SYSTEM & CONN TISSUE	N	$1,072.57	$1,837.52	$1,851.76
248	TENDONITIS, MYOSITIS & BURSITIS	N	$1,166.30	$2,354.28	$1,984.04
249	AFTERCARE, MUSCULOSKELETAL SYSTEM & CONNECTIVE TISSUE	N	$1,095.92	$2,237.76	$1,583.66
250	FX, SPRN, STRN & DISL OF FOREARM, HAND, FOOT AGE >17 W CC	N	$1,186.12	$2,370.05	$1,845.40
251	FX, SPRN, STRN & DISL OF FOREARM, HAND, FOOT AGE >17 W/O CC	N	$1,244.09	$2,466.02	$1,875.67
252	FX, SPRN, STRN & DISL OF FOREARM, HAND, FOOT AGE 0-17	N	$1,128.97	$2,273.18	$1,656.73
253	FX, SPRN, STRN & DISL OF UPARM,LOWLEG EX FOOT AGE >17 W CC	N	$1,112.18	$2,375.86	$1,762.67
254	FX, SPRN, STRN & DISL OF UPARM,LOWLEG EX FOOT AGE >17 W/O CC	N	$1,109.81	$2,432.67	$1,421.82
255	FX, SPRN, STRN & DISL OF UPARM,LOWLEG EX FOOT AGE 0-17	N	$1,087.10	$2,130.86	$1,483.01
256	OTHER MUSCULOSKELETAL SYSTEM & CONNECTIVE TISSUE DIAGNOSES	N	$1,076.12	$2,251.29	$1,655.13
257	TOTAL MASTECTOMY FOR MALIGNANCY W CC	S	$1,166.33	$2,116.38	$5,703.20
258	TOTAL MASTECTOMY FOR MALIGNANCY W/O CC	S	$1,113.93	$1,978.29	$6,950.89
259	SUBTOTAL MASTECTOMY FOR MALIGNANCY W CC	S	$1,399.04	$2,323.91	$5,890.48
260	SUBTOTAL MASTECTOMY FOR MALIGNANCY W/O CC	S	$1,348.95	$2,819.23	$9,307.04
261	BREAST PROC FOR NON-MALIGNANCY EXCEPT BIOPSY & LOCAL EXCISION	S	$1,382.27	$3,431.86	$8,391.14
262	BREAST BIOPSY & LOCAL EXCISION FOR NON-MALIGNANCY	S	$1,329.15	$1,854.67	$3,393.23
263	SKIN GRAFT &/OR DEBRID FOR SKN ULCER OR CELLULITIS W CC	S	$1,159.62	$2,337.33	$2,189.61
264	SKIN GRAFT &/OR DEBRID FOR SKN ULCER OR CELLULITIS W/O CC	S	$1,165.40	$1,583.05	$1,961.77
265	SKIN GRAFT &/OR DEBRID EXCEPT FOR SKIN ULCER OR CELLULITIS W CC	S	$1,347.06	$2,813.49	$3,966.40
266	SKIN GRAFT &/OR DEBRID EXCEPT FOR SKIN ULCER OR CELLULITIS W/O CC	S	$1,565.11	$3,576.11	$5,605.81
267	PERIANAL & PILONIDAL PROCEDURES	S	$1,222.97	$2,041.26	$3,219.14
268	SKIN, SUBCUTANEOUS TISSUE & BREAST PLASTIC PROCEDURES	S	$1,414.96	$3,855.63	$6,651.61
269	OTHER SKIN, SUBCUT TISS & BREAST PROC W CC	S	$1,129.50	$2,062.11	$2,670.12
270	OTHER SKIN, SUBCUT TISS & BREAST PROC W/O CC	S	$1,216.89	$1,952.76	$3,576.98
271	SKIN ULCERS	N	$1,058.17	$2,009.42	$1,542.31
272	MAJOR SKIN DISORDERS W CC	N	$1,205.70	$2,609.74	$2,185.72

TABLE A. — ACUTE INPATIENT FACILITY NATIONWIDE PER DIEM CHARGES BY DRG (DIAGNOSIS RELATED GROUP)

PAGE 5 OF 8

DRG	Description	Surgical/ Non-Surgical Indicator	Per Diem Charge		
			Standard Room and Board	ICU Room and Board	Ancillary
273	MAJOR SKIN DISORDERS W/O CC	N	$1,189.02	$2,698.87	$2,154.29
274	MALIGNANT BREAST DISORDERS W CC	N	$1,152.62	$2,066.64	$1,958.79
275	MALIGNANT BREAST DISORDERS W/O CC	N	$1,181.04	$1,677.77	$1,293.81
276	NON-MALIGANT BREAST DISORDERS	N	$1,178.87	$2,028.31	$1,831.78
277	CELLULITIS AGE >17 W CC	N	$1,191.35	$2,090.63	$1,763.02
278	CELLULITIS AGE >17 W/O CC	N	$1,169.52	$1,973.15	$1,437.59
279	CELLULITIS AGE 0-17	N	$1,269.66	$2,230.91	$1,753.49
280	TRAUMA TO THE SKIN, SUBCUT TISS & BREAST AGE >17 W CC	N	$1,173.24	$2,260.13	$2,135.23
281	TRAUMA TO THE SKIN, SUBCUT TISS & BREAST AGE >17 W/O CC	N	$1,201.26	$2,136.50	$1,999.80
282	TRAUMA TO THE SKIN, SUBCUT TISS & BREAST AGE 0-17	N	$1,190.07	$2,304.68	$1,893.85
283	MINOR SKIN DISORDERS W CC	N	$1,243.21	$2,216.81	$1,966.79
284	MINOR SKIN DISORDERS W/O CC	N	$971.28	$1,738.98	$1,247.50
285	AMPUTAT OF LOWER LIMB FOR ENDOCRINE,NUTRIT,& METABOL DISORDERS	S	$1,153.48	$2,308.50	$2,542.32
286	ADRENAL & PITUITARY PROCEDURES	S	$1,346.61	$3,126.89	$6,939.40
287	SKIN GRAFTS & WOUND DEBRID FOR ENDOC, NUTRIT & METAB DISORDERS	S	$1,293.48	$2,297.75	$2,205.45
288	O.R. PROCEDURES FOR OBESITY	S	$1,252.23	$2,771.51	$8,940.63
289	PARATHYROID PROCEDURES	S	$1,270.40	$2,694.74	$6,268.70
290	THYROID PROCEDURES	S	$1,322.42	$2,505.29	$7,583.20
291	THYROGLOSSAL PROCEDURES	S	$1,648.09	$7,057.87	$9,963.94
292	OTHER ENDOCRINE, NUTRIT & METAB O.R. PROC W CC	S	$1,295.75	$2,300.96	$3,552.80
293	OTHER ENDOCRINE, NUTRIT & METAB O.R. PROC W/O CC	S	$1,306.24	$3,351.09	$5,321.75
294	DIABETES AGE >35	N	$1,195.92	$2,216.04	$2,034.22
295	DIABETES AGE 0-35	N	$967.66	$1,855.51	$2,409.17
296	NUTRITIONAL & MISC METABOLIC DISORDERS AGE >17 W CC	N	$1,081.87	$1,939.87	$1,981.34
297	NUTRITIONAL & MISC METABOLIC DISORDERS AGE >17 W/O CC	N	$1,048.44	$1,900.39	$1,680.62
298	NUTRITIONAL & MISC METABOLIC DISORDERS AGE 0-17	N	$1,875.61	$3,136.73	$3,273.36
299	INBORN ERRORS OF METABOLISM	N	$979.76	$2,050.45	$2,231.47
300	ENDOCRINE DISORDERS W CC	N	$1,196.82	$2,169.24	$2,252.45
301	ENDOCRINE DISORDERS W/O CC	N	$1,421.98	$2,518.85	$2,511.14
302	KIDNEY TRANSPLANT	S	$1,856.56	$3,775.93	$17,531.47
303	KIDNEY,URETER & MAJOR BLADDER PROCEDURES FOR NEOPLASM	S	$1,245.34	$2,558.38	$5,060.13
304	KIDNEY,URETER & MAJOR BLADDER PROC FOR NON-NEOPL W CC	S	$1,325.91	$2,545.74	$4,413.27
305	KIDNEY,URETER & MAJOR BLADDER PROC FOR NON-NEOPL W/O CC	S	$1,200.22	$2,342.09	$6,189.01
306	PROSTATECTOMY W CC	S	$1,179.02	$2,185.42	$3,289.18
307	PROSTATECTOMY W/O CC	S	$1,062.26	$1,735.27	$4,842.08
308	MINOR BLADDER PROCEDURES W CC	S	$1,166.28	$2,136.60	$3,836.95
309	MINOR BLADDER PROCEDURES W/O CC	S	$1,196.69	$2,067.55	$8,755.47
310	TRANSURETHRAL PROCEDURES W CC	S	$1,282.70	$2,287.45	$3,927.97
311	TRANSURETHRAL PROCEDURES W/O CC	S	$1,522.03	$2,277.03	$7,054.29
312	URETHRAL PROCEDURES, AGE >17 W CC	S	$1,314.73	$2,325.49	$3,880.03
313	URETHRAL PROCEDURES, AGE >17 W/O CC	S	$1,285.21	$2,762.31	$6,135.66
314	URETHRAL PROCEDURES, AGE 0-17	S	$1,335.47	$2,296.14	$4,234.08
315	OTHER KIDNEY & URINARY TRACT O.R. PROCEDURES	S	$1,301.63	$2,311.26	$4,504.03
316	RENAL FAILURE	N	$1,130.41	$2,074.83	$2,447.95
317	ADMIT FOR RENAL DIALYSIS	N	$1,090.60	$2,073.21	$3,511.22
318	KIDNEY & URINARY TRACT NEOPLASMS W CC	N	$1,169.72	$2,550.06	$2,516.70
319	KIDNEY & URINARY TRACT NEOPLASMS W/O CC	N	$1,147.16	$2,295.82	$2,540.78
320	KIDNEY & URINARY TRACT INFECTIONS AGE >17 W CC	N	$1,070.44	$1,968.58	$1,948.13
321	KIDNEY & URINARY TRACT INFECTIONS AGE >17 W/O CC	N	$1,027.35	$1,890.85	$1,749.09
322	KIDNEY & URINARY TRACT INFECTIONS AGE 0-17	N	$1,263.71	$3,357.97	$2,139.53
323	URINARY STONES W CC, &/OR ESW LITHOTRIPSY	N	$1,099.20	$2,029.20	$3,674.59
324	URINARY STONES W/O CC	N	$961.21	$2,190.66	$3,410.42
325	KIDNEY & URINARY TRACT SIGNS & SYMPTOMS AGE >17 W CC	N	$1,264.67	$2,191.62	$2,136.30
326	KIDNEY & URINARY TRACT SIGNS & SYMPTOMS AGE >17 W/O CC	N	$1,292.90	$1,773.67	$2,055.59
327	KIDNEY & URINARY TRACT SIGNS & SYMPTOMS AGE 0-17	N	$1,256.43	$2,233.08	$1,929.99
328	URETHRAL STRICTURE AGE >17 W CC	N	$1,404.45	$1,955.49	$3,115.39
329	URETHRAL STRICTURE AGE >17 W/O CC	N	$1,308.33	$2,743.88	$4,070.68
330	URETHRAL STRICTURE AGE 0-17	N	$1,484.40	$3,111.16	$3,133.08
331	OTHER KIDNEY & URINARY TRACT DIAGNOSES AGE >17 W CC	N	$1,166.87	$2,140.02	$2,629.30
332	OTHER KIDNEY & URINARY TRACT DIAGNOSES AGE >17 W/O CC	N	$1,258.41	$1,986.92	$2,714.40
333	OTHER KIDNEY & URINARY TRACT DIAGNOSES AGE 0-17	N	$1,951.19	$4,037.54	$4,977.71
334	MAJOR MALE PELVIC PROCEDURES W CC	S	$1,176.44	$2,544.27	$5,709.04
335	MAJOR MALE PELVIC PROCEDURES W/O CC	S	$1,166.52	$2,391.92	$7,119.77
336	TRANSURETHRAL PROSTATECTOMY W CC	S	$1,098.71	$2,188.75	$3,711.69
337	TRANSURETHRAL PROSTATECTOMY W/O CC	S	$1,105.73	$1,892.89	$4,909.24
338	TESTES PROCEDURES, FOR MALIGNANCY	S	$937.82	$1,510.17	$3,072.56

TABLE A. — ACUTE INPATIENT FACILITY NATIONWIDE PER DIEM CHARGES BY DRG (DIAGNOSIS RELATED GROUP)

PAGE 6 OF 8

DRG	Description	Surgical /Non-Surgical Indicator	Per Diem Charge		
			Standard Room and Board	ICU Room and Board	Ancillary
339	TESTES PROCEDURES, NON-MALIGNANCY AGE >17	S	$1,059.39	$2,145.20	$3,195.40
340	TESTES PROCEDURES, NON-MALIGNANCY AGE 0-17	S	$1,094.03	$2,305.97	$3,309.16
341	PENIS PROCEDURES	S	$1,533.18	$3,076.89	$9,588.71
342	CIRCUMCISION AGE >17	S	$923.45	$1,585.26	$3,436.55
343	CIRCUMCISION AGE 0-17	S	$945.85	$1,764.59	$3,739.75
344	OTHER MALE REPRODUCTIVE SYSTEM O.R. PROCEDURES FOR MALIGNANCY	S	$1,614.25	$2,940.33	$11,013.14
345	OTHER MALE REPRODUCTIVE SYSTEM O.R. PROC EXCEPT FOR MALIGNANCY	S	$1,306.19	$2,548.74	$3,101.61
346	MALIGNANCY, MALE REPRODUCTIVE SYSTEM, W CC	N	$1,146.19	$2,021.04	$1,980.82
347	MALIGNANCY, MALE REPRODUCTIVE SYSTEM, W/O CC	N	$1,313.00	$1,972.20	$3,018.88
348	BENIGN PROSTATIC HYPERTROPHY W CC	N	$1,246.59	$2,132.85	$2,237.24
349	BENIGN PROSTATIC HYPERTROPHY W/O CC	N	$1,317.83	$2,094.49	$2,030.66
350	INFLAMMATION OF THE MALE REPRODUCTIVE SYSTEM	N	$1,054.31	$1,833.51	$2,039.62
351	STERILIZATION, MALE	N	$960.12	$1,860.82	$2,638.33
352	OTHER MALE REPRODUCTIVE SYSTEM DIAGNOSES	N	$1,143.33	$2,681.35	$2,447.38
353	PELVIC EVISCERATION, RADICAL HYSTERECTOMY & RADICAL VULVECTOMY	S	$1,333.66	$2,932.84	$5,104.96
354	UTERINE,ADNEXA PROC FOR NON-OVARIAN/ADNEXAL MALIG W CC	S	$1,328.88	$2,644.57	$4,382.27
355	UTERINE,ADNEXA PROC FOR NON-OVARIAN/ADNEXAL MALIG W/O CC	S	$1,297.48	$2,735.08	$5,032.76
356	FEMALE REPRODUCTIVE SYSTEM RECONSTRUCTIVE PROCEDURES	S	$1,009.08	$2,134.88	$6,497.58
357	UTERINE & ADNEXA PROC FOR OVARIAN OR ADNEXAL MALIGNANCY	S	$1,299.08	$2,682.29	$4,508.50
358	UTERINE & ADNEXA PROC FOR NON-MALIGNANCY W CC	S	$1,070.64	$2,319.45	$4,541.75
359	UTERINE & ADNEXA PROC FOR NON-MALIGNANCY W/O CC	S	$1,034.37	$2,120.56	$5,339.97
360	VAGINA, CERVIX & VULVA PROCEDURES	S	$1,028.19	$2,077.17	$5,204.04
361	LAPAROSCOPY & INCISIONAL TUBAL INTERRUPTION	S	$1,191.32	$2,341.11	$5,908.03
362	ENDOSCOPIC TUBAL INTERRUPTION	S	$948.71	$1,919.29	$4,573.62
363	D&C, CONIZATION & RADIO-IMPLANT, FOR MALIGNANCY	S	$1,274.08	$2,127.76	$3,759.29
364	D&C, CONIZATION EXCEPT FOR MALIGNANCY	S	$1,448.68	$2,688.74	$2,790.24
365	OTHER FEMALE REPRODUCTIVE SYSTEM O.R. PROCEDURES	S	$1,136.58	$2,419.92	$3,874.66
366	MALIGNANCY, FEMALE REPRODUCTIVE SYSTEM W CC	N	$1,196.95	$2,142.90	$2,272.73
367	MALIGNANCY, FEMALE REPRODUCTIVE SYSTEM W/O CC	N	$1,242.16	$4,414.21	$1,916.79
368	INFECTIONS, FEMALE REPRODUCTIVE SYSTEM	N	$1,090.56	$2,041.26	$2,192.07
369	MENSTRUAL & OTHER FEMALE REPRODUCTIVE SYSTEM DISORDERS	N	$1,330.63	$2,604.61	$2,493.29
370	CESAREAN SECTION W CC	S	$1,137.62	$2,791.52	$3,660.32
371	CESAREAN SECTION W/O CC	S	$1,120.70	$2,239.34	$2,719.27
372	VAGINAL DELIVERY W COMPLICATING DIAGNOSES	N	$1,126.81	$2,214.81	$2,342.33
373	VAGINAL DELIVERY W/O COMPLICATING DIAGNOSES	N	$1,126.73	$2,025.14	$2,533.54
374	VAGINAL DELIVERY W STERILIZATION &/OR D&C	S	$1,152.81	$1,705.85	$4,393.72
375	VAGINAL DELIVERY W O.R. PROC EXCEPT STERIL &/OR D&C	S	$525.60	$1,063.33	$2,533.88
376	POSTPARTUM & POST ABORTION DIAGNOSES W/O O.R. PROCEDURE	N	$1,171.44	$2,895.11	$1,479.82
377	POSTPARTUM & POST ABORTION DIAGNOSES W O.R. PROCEDURE	S	$1,040.38	$1,337.38	$3,542.89
378	ECTOPIC PREGNANCY	N	$1,099.16	$2,682.66	$6,623.68
379	THREATENED ABORTION	N	$1,287.32	$2,490.19	$1,840.79
380	ABORTION W/O D&C	N	$1,044.08	$2,206.27	$2,838.98
381	ABORTION W D&C, ASPIRATION CURETTAGE OR HYSTEROTOMY	S	$1,852.63	$1,551.54	$4,830.82
382	FALSE LABOR	N	$1,033.29	$1,747.12	$1,579.43
383	OTHER ANTEPARTUM DIAGNOSES W MEDICAL COMPLICATIONS	N	$1,271.09	$2,025.66	$1,569.65
384	OTHER ANTEPARTUM DIAGNOSES W/O MEDICAL COMPLICATIONS	N	$1,215.93	$1,500.41	$2,280.17
385	NEONATES, DIED OR TRANSFERRED TO ANOTHER ACUTE CARE FACILITY	N	$1,852.55	$3,404.31	$3,385.91
386	EXTREME IMMATURITY OR RESPIRATORY DISTRESS SYNDROME, NEONATE	N	$1,655.88	$3,042.88	$3,026.42
387	PREMATURITY W MAJOR PROBLEMS	N	$1,471.57	$2,704.20	$2,689.58
388	PREMATURITY W/O MAJOR PROBLEMS	N	$938.11	$1,723.88	$1,714.57
389	FULL TERM NEONATE W MAJOR PROBLEMS	N	$1,359.03	$2,992.04	$1,048.15
390	NEONATE W OTHER SIGNIFICANT PROBLEMS	N	$854.14	$1,569.59	$1,561.10
391	NORMAL NEWBORN	N	$317.76	$583.93	$580.77
392	SPLENECTOMY AGE >17	S	$1,084.85	$2,423.12	$5,013.20
393	SPLENECTOMY AGE 0-17	S	$990.03	$2,137.30	$5,079.69
394	OTHER O.R. PROCEDURES OF THE BLOOD AND BLOOD FORMING ORGANS	S	$1,441.08	$2,661.46	$4,091.67
395	RED BLOOD CELL DISORDERS AGE >17	N	$1,146.88	$2,056.84	$2,533.53
396	RED BLOOD CELL DISORDERS AGE 0-17	N	$2,045.70	$5,984.49	$9,115.22
397	COAGULATION DISORDERS	N	$1,170.74	$2,179.69	$3,885.54
398	RETICULOENDOTHELIAL & IMMUNITY DISORDERS W CC	N	$1,215.84	$2,228.26	$3,131.78
399	RETICULOENDOTHELIAL & IMMUNITY DISORDERS W/O CC	N	$1,238.38	$2,189.56	$2,913.63
401	LYMPHOMA & NON-ACUTE LEUKEMIA W OTHER O.R. PROC W CC	S	$1,319.01	$2,450.46	$3,953.61
402	LYMPHOMA & NON-ACUTE LEUKEMIA W OTHER O.R. PROC W/O CC	S	$1,271.75	$2,747.33	$4,839.49
403	LYMPHOMA & NON-ACUTE LEUKEMIA W CC	N	$1,261.58	$2,309.44	$3,260.83
404	LYMPHOMA & NON-ACUTE LEUKEMIA W/O CC	N	$1,527.57	$2,718.42	$3,688.51
405	ACUTE LEUKEMIA W/O MAJOR O.R. PROCEDURE AGE 0-17	N	$1,322.31	$2,630.22	$4,323.42

TABLE A. — ACUTE INPATIENT FACILITY NATIONWIDE PER DIEM CHARGES BY DRG (DIAGNOSIS RELATED GROUP)

PAGE 7 OF 8

DRG	Description	Surgical /Non-Surgical Indicator	Per Diem Charge		
			Standard Room and Board	ICU Room and Board	Ancillary
406	MYELOPROLIF DISORD OR POORLY DIFF NEOPL W MAJ O.R.PROC W CC	S	$1,361.66	$2,732.15	$4,359.48
407	MYELOPROLIF DISORD OR POORLY DIFF NEOPL W MAJ O.R.PROC W/O CC	S	$1,351.82	$2,683.74	$5,487.13
408	MYELOPROLIF DISORD OR POORLY DIFF NEOPL W OTHER O.R.PROC	S	$1,319.56	$2,611.40	$4,456.76
409	RADIOTHERAPY	N	$2,034.03	$4,111.11	$3,563.33
410	CHEMOTHERAPY W/O ACUTE LEUKEMIA AS SECONDARY DIAGNOSIS	N	$1,662.24	$2,997.86	$5,504.25
411	HISTORY OF MALIGNANCY W/O ENDOSCOPY	N	$1,131.01	$1,131.01	$2,894.55
412	HISTORY OF MALIGNANCY W ENDOSCOPY	N	$2,990.41	$1,103.95	$7,710.19
413	OTHER MYELOPROLIF DIS OR POORLY DIFF NEOPL DIAG W CC	N	$1,180.71	$2,345.71	$2,458.05
414	OTHER MYELOPROLIF DIS OR POORLY DIFF NEOPL DIAG W/O CC	N	$1,126.24	$2,703.28	$2,221.33
415	O.R. PROCEDURE FOR INFECTIOUS & PARASITIC DISEASES	S	$1,234.32	$2,372.54	$3,443.45
416	SEPTICEMIA AGE >17	N	$1,153.87	$2,215.53	$2,584.66
417	SEPTICEMIA AGE 0-17	N	$1,551.45	$5,308.87	$6,014.35
418	POSTOPERATIVE & POST-TRAUMATIC INFECTIONS	N	$1,166.47	$2,162.34	$2,119.95
419	FEVER OF UNKNOWN ORIGIN AGE >17 W CC	N	$1,224.10	$2,106.61	$2,587.47
420	FEVER OF UNKNOWN ORIGIN AGE >17 W/O CC	N	$1,254.65	$2,188.85	$2,452.21
421	VIRAL ILLNESS AGE >17	N	$1,094.15	$2,000.00	$2,521.72
422	VIRAL ILLNESS & FEVER OF UNKNOWN ORIGIN AGE 0-17	N	$1,423.53	$2,628.59	$3,591.72
423	OTHER INFECTIOUS & PARASITIC DISEASES DIAGNOSES	N	$1,119.94	$2,264.45	$2,876.61
424	O.R. PROCEDURE W PRINCIPAL DIAGNOSES OF MENTAL ILLNESS	S	$1,397.14	$2,264.06	$1,515.08
425	ACUTE ADJUSTMENT REACTION & PSYCHOSOCIAL DYSFUNCTION	N	$1,109.06	$1,878.65	$1,408.95
426	DEPRESSIVE NEUROSES	N	$1,202.28	$1,556.90	$509.34
427	NEUROSES EXCEPT DEPRESSIVE	N	$1,138.63	$1,750.71	$438.63
428	DISORDERS OF PERSONALITY & IMPULSE CONTROL	N	$1,025.25	$1,517.80	$332.61
429	ORGANIC DISTURBANCES & MENTAL RETARDATION	N	$1,153.54	$1,778.11	$628.49
430	PSYCHOSES	N	$1,100.26	$1,528.89	$336.07
431	CHILDHOOD MENTAL DISORDERS	N	$827.64	$1,538.90	$218.69
432	OTHER MENTAL DISORDER DIAGNOSES	N	$944.47	$1,504.68	$269.72
433	ALCOHOL/DRUG ABUSE OR DEPENDENCE, LEFT AMA	N	$1,413.86	$2,658.04	$827.02
439	SKIN GRAFTS FOR INJURIES	S	$1,206.49	$2,777.89	$3,242.41
440	WOUND DEBRIDEMENTS FOR INJURIES	S	$1,145.38	$2,461.70	$2,929.60
441	HAND PROCEDURES FOR INJURIES	S	$1,014.21	$2,224.54	$4,496.09
442	OTHER O.R. PROCEDURES FOR INJURIES W CC	S	$1,129.89	$2,351.42	$4,188.83
443	OTHER O.R. PROCEDURES FOR INJURIES W/O CC	S	$1,200.70	$2,365.77	$5,261.50
444	TRAUMATIC INJURY AGE >17 W CC	N	$1,134.96	$2,510.18	$2,152.12
445	TRAUMATIC INJURY AGE >17 W/O CC	N	$1,186.80	$2,867.32	$1,907.08
446	TRAUMATIC INJURY AGE 0-17	N	$1,059.84	$2,247.52	$1,743.60
447	ALLERGIC REACTIONS AGE >17	N	$1,189.74	$2,375.68	$2,758.49
448	ALLERGIC REACTIONS AGE 0-17	N	$1,150.10	$2,264.47	$2,281.18
449	POISONING & TOXIC EFFECTS OF DRUGS AGE >17 W CC	N	$1,216.79	$2,318.90	$3,034.07
450	POISONING & TOXIC EFFECTS OF DRUGS AGE >17 W/O CC	N	$1,186.76	$2,136.26	$2,647.31
451	POISONING & TOXIC EFFECTS OF DRUGS AGE 0-17	N	$799.21	$1,522.87	$1,719.90
452	COMPLICATIONS OF TREATMENT W CC	N	$1,184.20	$2,331.81	$2,763.22
453	COMPLICATIONS OF TREATMENT W/O CC	N	$1,160.34	$2,307.86	$2,416.42
454	OTHER INJURY, POISONING & TOXIC EFFECT DIAG W CC	N	$1,148.69	$2,267.16	$2,330.72
455	OTHER INJURY, POISONING & TOXIC EFFECT DIAG W/O CC	N	$1,279.68	$2,304.60	$2,661.87
461	O.R. PROC W DIAGNOSES OF OTHER CONTACT W HEALTH SERVICES	S	$1,287.47	$2,973.15	$3,005.15
462	REHABILITATION	N	$1,152.15	$1,449.90	$1,370.62
463	SIGNS & SYMPTOMS W CC	N	$1,017.90	$2,120.68	$1,727.54
464	SIGNS & SYMPTOMS W/O CC	N	$997.62	$1,880.78	$1,526.23
465	AFTERCARE W HISTORY OF MALIGNANCY AS SECONDARY DIAGNOSIS	N	$997.68	$1,873.26	$1,331.23
466	AFTERCARE W/O HISTORY OF MALIGNANCY AS SECONDARY DIAGNOSIS	N	$1,089.84	$2,043.93	$1,333.87
467	OTHER FACTORS INFLUENCING HEALTH STATUS	N	$489.71	$1,531.09	$413.34
468	EXTENSIVE O.R. PROCEDURE UNRELATED TO PRINCIPAL DIAGNOSIS	S	$1,192.32	$2,234.95	$4,079.72
469	PRINCIPAL DIAGNOSIS INVALID AS DISCHARGE DIAGNOSIS	S	$0.00	$0.00	$0.00
470	UNGROUPABLE	S	$0.00	$0.00	$0.00
471	BILATERAL OR MULTIPLE MAJOR JOINT PROCS OF LOWER EXTREMITY	S	$1,226.05	$2,429.28	$10,825.22
473	ACUTE LEUKEMIA W/O MAJOR O.R. PROCEDURE AGE >17	N	$1,462.94	$2,738.99	$4,662.90
475	RESPIRATORY SYSTEM DIAGNOSIS WITH VENTILATOR SUPPORT	N	$1,205.95	$2,548.40	$4,087.73
476	PROSTATIC O.R. PROCEDURE UNRELATED TO PRINCIPAL DIAGNOSIS	S	$1,256.02	$2,186.10	$2,647.85
477	NON-EXTENSIVE O.R. PROCEDURE UNRELATED TO PRINCIPAL DIAGNOSIS	S	$1,172.91	$2,190.30	$3,016.09
478	OTHER VASCULAR PROCEDURES W CC	S	$1,270.86	$2,231.49	$4,958.41
479	OTHER VASCULAR PROCEDURES W/O CC	S	$1,191.19	$2,101.52	$7,902.45
480	LIVER TRANSPLANT	S	$1,819.16	$4,076.44	$16,341.50
481	BONE MARROW TRANSPLANT	S	$2,309.53	$2,875.41	$5,309.98
482	TRACHEOSTOMY FOR FACE,MOUTH & NECK DIAGNOSES	S	$1,291.64	$2,602.60	$4,233.64
483	TRAC W MECH VENT 96+HRS OR PDX EXCEPT FACE,MOUTH & NECK DX OSES	S	$1,593.60	$2,620.44	$5,127.46

TABLE A. — ACUTE INPATIENT FACILITY NATIONWIDE PER DIEM CHARGES BY DRG (DIAGNOSIS RELATED GROUP)

PAGE 8 OF 8

DRG	Description	Surgical /Non-Surgical Indicator	Per Diem Charge		
			Standard Room and Board	ICU Room and Board	Ancillary
484	CRANIOTOMY FOR MULTIPLE SIGNIFICANT TRAUMA	S	$1,281.37	$2,590.31	$5,339.41
485	LIMB REATTACHMENT, HIP AND FEMUR PROC FOR MULTIPLE SIGNIFICANT TRA	S	$1,038.97	$2,295.90	$4,589.93
486	OTHER O.R. PROCEDURES FOR MULTIPLE SIGNIFICANT TRAUMA	S	$1,118.27	$2,406.84	$5,773.07
487	OTHER MULTIPLE SIGNIFICANT TRAUMA	N	$1,109.01	$2,801.87	$3,213.51
488	HIV W EXTENSIVE O.R. PROCEDURE	S	$2,151.00	$3,952.15	$5,678.50
489	HIV W MAJOR RELATED CONDITION	N	$2,098.47	$3,690.27	$4,031.68
490	HIV W OR W/O OTHER RELATED CONDITION	N	$1,717.28	$2,981.34	$2,926.57
491	MAJOR JOINT & LIMB REATTACHMENT PROCEDURES OF UPPER EXTREMITY	S	$1,059.76	$2,135.39	$8,851.86
492	CHEMOTHERAPY W ACUTE LEUKEMIA OR W USE OF HI DOSE CHEMOAGENT	N	$1,536.04	$2,835.39	$5,044.41
493	LAPAROSCOPIC CHOLECYSTECTOMY W/O C.D.E. W CC	S	$1,009.66	$1,908.33	$4,377.99
494	LAPAROSCOPIC CHOLECYSTECTOMY W/O C.D.E. W/O CC	S	$1,094.89	$1,953.20	$6,413.20
495	LUNG TRANSPLANT	S	$1,485.98	$3,661.01	$14,951.57
496	COMBINED ANTERIOR/POSTERIOR SPINAL FUSION	S	$1,272.06	$2,817.79	$12,411.12
497	SPINAL FUSION EXCEPT CERVICAL W CC	S	$1,121.44	$2,487.98	$10,282.53
498	SPINAL FUSION EXCEPT CERVICAL W/O CC	S	$1,043.99	$2,250.42	$12,122.90
499	BACK & NECK PROCEDURES EXCEPT SPINAL FUSION W CC	S	$1,135.02	$2,374.44	$5,393.30
500	BACK & NECK PROCEDURES EXCEPT SPINAL FUSION W/O CC	S	$1,095.74	$2,407.65	$7,168.18
501	KNEE PROCEDURES W PDX OF INFECTION W CC	S	$1,070.93	$2,026.56	$3,678.84
502	KNEE PROCEDURES W PDX OF INFECTION W/O CC	S	$962.40	$1,722.19	$3,358.78
503	KNEE PROCEDURES W/O PDX OF INFECTION	S	$1,162.11	$2,097.40	$5,420.94
504	EXTENSIVE 3RD DEGREE BURNS W SKIN GRAFT	S	$2,535.94	$5,825.88	$11,317.97
505	EXTENSIVE 3RD DEGREE BURNS W/O SKIN GRAFT	N	$1,062.56	$4,224.31	$5,382.94
506	FULL THICKNESS BURN W SKIN GRAFT OR INHAL INJ W CC OR SIG TRAUMA	S	$1,571.51	$3,484.13	$3,466.80
507	FULL THICKNESS BURN W SKIN GRFT OR INHAL INJ W/O CC OR SIG TRAUMA	S	$1,002.76	$2,979.62	$2,116.93
508	FULL THICKNESS BURN W/O SKIN GRFT OR INHAL INJ W CC OR SIG TRAUMA	N	$1,223.40	$3,847.29	$2,324.15
509	FULL THICKNESS BURN W/O SKIN GRFT OR INH INJ W/O CC OR SIG TRAUMA	N	$940.52	$3,387.72	$1,649.59
510	NON-EXTENSIVE BURNS W CC OR SIGNIFICANT TRAUMA	N	$1,070.65	$3,881.34	$2,202.24
511	NON-EXTENSIVE BURNS W/O CC OR SIGNIFICANT TRAUMA	N	$1,090.18	$3,956.83	$1,955.20
512	SIMULTANEOUS PANCREAS/KIDNEY TRANSPLANT	S	$1,872.23	$3,927.26	$19,366.08
513	PANCREAS TRANSPLANT	S	$2,100.43	$4,602.41	$19,691.55
515	CARDIAC DEFIBRILLATOR IMPLANT W/O CARDIAC CATH	S	$1,311.87	$2,211.39	$22,666.66
516	PERCUTANEOUS CARDIOVASC PROC W AMI	S	$1,269.26	$2,198.21	$9,544.61
517	PERC CARDIO PROC W NON-DRUG ELUTING STENT W/O AMI	S	$1,335.92	$2,210.31	$16,070.03
518	PERC CARDIO PROC W/O CORONARY ARTERY STENT OR AMI	S	$1,596.82	$2,413.23	$10,269.89
519	CERVICAL SPINAL FUSION W CC	S	$1,075.86	$2,427.57	$8,902.30
520	CERVICAL SPINAL FUSION W/O CC	S	$1,004.47	$2,288.35	$14,417.39
521	ALCOHOL/DRUG ABUSE OR DEPENDENCE W CC	N	$1,173.45	$2,296.47	$1,233.42
522	ALC/DRUG ABUSE OR DEPEND W REHABILITATION THERAPY W/O CC	N	$1,023.51	$1,726.69	$268.65
523	ALC/DRUG ABUSE OR DEPEND W/O REHABILITATION THERAPY W/O CC	N	$1,283.88	$1,899.11	$478.12
524	TRANSIENT ISCHEMIA	N	$1,119.74	$1,949.91	$2,730.49
525	HEART ASSIST SYSTEM IMPLANT	S	$1,223.47	$2,345.06	$9,566.37
526	PERCUTNEOUS CARDIOVASULAR PROC W DRUG ELUTING STENT W AMI	S	$1,305.67	$2,360.63	$11,980.77
527	PERCUTNEOUS CARDIOVASULAR PROC W DRUG ELUTING STENT W/O AMI	S	$1,606.05	$2,692.27	$23,794.21
528	INTRACRANIAL VASCULAR PROC W PDX HEMORRHAGE	S	$1,439.35	$3,350.69	$7,292.38
529	VENTRICULAR SHUNT PROCEDURES W CC	S	$1,417.58	$3,145.20	$4,848.87
530	VENTRICULAR SHUNT PROCEDURES W/O CC	S	$1,393.10	$2,952.06	$5,782.53
531	SPINAL PROCEDURES W CC	S	$1,253.51	$2,719.45	$5,168.41
532	SPINAL PROCEDURES W/O CC	S	$1,212.48	$2,577.77	$6,383.92
533	EXTRACRANIAL PROCEDURES W CC	S	$1,128.30	$2,162.65	$6,115.79
534	EXTRACRANIAL PROCEDURES W/O CC	S	$1,069.03	$2,154.55	$8,495.75
535	CARDIAC DEFIB IMPLANT W CARDIAC CATH W AMI/HF/SHOCK	S	$1,534.81	$2,595.14	$13,315.25
536	CARDIAC DEFIB IMPLANT W CARDIAC CATH W/O AMI/HF/SHOCK	S	$1,402.79	$2,274.01	$20,259.36
537	LOCAL EXCIS & REMOV OF INT FIX DEV EXCEPT HIP & FEMUR W CC	S	$1,342.00	$2,580.78	$4,441.09
538	LOCAL EXCIS & REMOV OF INT FIX DEV EXCEPT HIP & FEMUR W/O CC	S	$1,208.29	$2,736.70	$6,237.84
539	LYMPHOMA & LEUKEMIA W MAJOR OR PROCEDURE W CC	S	$1,288.77	$2,607.57	$4,777.21
540	LYMPHOMA & LEUKEMIA W MAJOR OR PROCEDURE W/O CC	S	$1,204.96	$2,416.98	$5,423.26
541	TRACH W MV 96+HRS OR PDX EXC FACE, MOUTH, & NECK DX W/MAJ OR	S	$1,357.99	$2,723.94	$6,112.02
542	TRACH W MV 96+HRS OR PDX EXC FACE, MOUTH, & NECK DX W/O MJ OR	S	$1,530.45	$3,069.88	$6,888.24
543	CRANIOTOMY W/IMPLANT OF CHEMO AGENT OR ACUTE COMPLEX CNS PDX	S	$1,724.82	$3,459.75	$7,763.05

TABLE B. — SKILLED NURSING FACILITY/SUB-ACUTE INPATIENT FACILITY NATIONWIDE PER DIEM CHARGE

Description	All-Inclusive Per Diem Charge
Skilled Nursing Facility/Sub-Acute Inpatient Facility	$738.62

Supplementary Table 1
Reasonable Charges Data Sources - V2.3

V2.3 Data Source.xls - By Charge Type

Charge Type	Paragraph	Subject	Data Source	Edition
INPT	(b)(2)(iv)	trending forward	CPI-U, inpatient hospital services component, seasonally adjusted	January 2003, as of Sept 2004
INPT	(b)(2)(iv)	trending forward	CPI-U, inpatient hospital services component, seasonally adjusted	February 2003, as of Sept 2004
INPT	(b)(2)(iv)	trending forward	CPI-U, inpatient hospital services component, seasonally adjusted	March 2003, as of Sept 2004
INPT	(b)(2)(iv)	trending forward	CPI-U, inpatient hospital services component, seasonally adjusted	April 2003, as of Sept 2004
INPT	(b)(2)(iv)	trending forward	CPI-U, inpatient hospital services component, seasonally adjusted	June 2003, as of Sept 2004
INPT	(b)(2)(iv)	trending forward	CPI-U, inpatient hospital services component, seasonally adjusted	July 2003, as of Sept 2004
INPT	(b)(2)(iv)	trending forward	CPI-U, inpatient hospital services component, seasonally adjusted	August 2003, as of Sept 2004
INPT	(b)(2)(iv)	trending forward	CPI-U, inpatient hospital services component, seasonally adjusted	May 2004, as of Sept 2004
INPT	(b)(2)(iv)	trending forward	CPI-U, inpatient hospital services component, seasonally adjusted	June 2004, as of Sept 2004
INPT	(b)(2)(iv)	trending forward	CPI-U, inpatient hospital services component, seasonally adjusted	July 2004, as of Sept 2004
INPT	(b)(2)(iv)	trending forward	CPI-U, inpatient hospital services component, seasonally adjusted	August 2004, as of Sept 2004
INPT	(b)(1)	National Volume	Ingenix, CMS Medicare Provider Analysis and Review (MedPAR) Record	2003
INPT	(b)(1)	National Total Days	Ingenix, CMS Medicare Provider Analysis and Review (MedPAR) Record	2003
INPT	(b)(1)	National ICU + CCU Days	Ingenix, CMS Medicare Provider Analysis and Review (MedPAR) Record	2003
INPT	(b)(1)	National Non-ICU Days	Ingenix, CMS Medicare Provider Analysis and Review (MedPAR) Record	2003
INPT	(b)(1)	National Semi Private Days	Ingenix, CMS Medicare Provider Analysis and Review (MedPAR) Record	2003
INPT	(b)(1)(i)	National Total Charges	Ingenix, CMS Medicare Provider Analysis and Review (MedPAR) Record	2003
INPT	(b)(2)	National Room & Board Charges	Ingenix, CMS Medicare Provider Analysis and Review (MedPAR) Record	2003
INPT	(b)(2)	National Private Room Charges	Ingenix, CMS Medicare Provider Analysis and Review (MedPAR) Record	2003
INPT	(b)(2)	National Semi Private Room Charges	Ingenix, CMS Medicare Provider Analysis and Review (MedPAR) Record	2003
INPT	(b)(2)	National Ward Charges	Ingenix, CMS Medicare Provider Analysis and Review (MedPAR) Record	2003
INPT	(b)(2)	National ICU Charges	Ingenix, CMS Medicare Provider Analysis and Review (MedPAR) Record	2003
INPT	(b)(2)	National CCU Charges	Ingenix, CMS Medicare Provider Analysis and Review (MedPAR) Record	2003
INPT	(b)(2)	National Ancillary Charges	Ingenix, CMS Medicare Provider Analysis and Review (MedPAR) Record	2003
INPT	(b)(2)	Effective Ancillary Charges	Ingenix, CMS Medicare Provider Analysis and Review (MedPAR) Record	2003
INPT	(b)(2)	National Total Charges per Volume	Ingenix, CMS Medicare Provider Analysis and Review (MedPAR) Record	2003
INPT	(b)(2)	National Avg LOS	Ingenix, CMS Medicare Provider Analysis and Review (MedPAR) Record	2003
INPT	(b)(2)(i)	National R&B as % of Total Charges	Ingenix, CMS Medicare Provider Analysis and Review (MedPAR) Record	2003
INPT	(b)(2)(i)	National Ancillary as % of Total Charges	Ingenix, CMS Medicare Provider Analysis and Review (MedPAR) Record	2003
INPT	(b)(1)	National Semi Private Days	Ingenix, CMS Medicare Provider Analysis and Review (MedPAR) Record	2003
INPT	(b)(1)	National Special Care Days	Ingenix, CMS Medicare Provider Analysis and Review (MedPAR) Record	2003
SNF	(c)(2)(ii)	trending forward	CPI-U, inpatient hospital services component, seasonally adjusted	January 2003, as of Sept 2004
SNF	(c)(2)(ii)	trending forward	CPI-U, inpatient hospital services component, seasonally adjusted	February 2003, as of Sept 2004
SNF	(c)(2)(ii)	trending forward	CPI-U, inpatient hospital services component, seasonally adjusted	March 2003, as of Sept 2004
SNF	(c)(2)(ii)	trending forward	CPI-U, inpatient hospital services component, seasonally adjusted	April 2003, as of Sept 2004
SNF	(c)(2)(ii)	trending forward	CPI-U, inpatient hospital services component, seasonally adjusted	June 2003, as of Sept 2004
SNF	(c)(2)(ii)	trending forward	CPI-U, inpatient hospital services component, seasonally adjusted	July 2003, as of Sept 2004
SNF	(c)(2)(ii)	trending forward	CPI-U, inpatient hospital services component, seasonally adjusted	August 2003, as of Sept 2004
SNF	(c)(2)(ii)	trending forward	CPI-U, inpatient hospital services component, seasonally adjusted	May 2004, as of Sept 2004
SNF	(c)(2)(ii)	trending forward	CPI-U, inpatient hospital services component, seasonally adjusted	June 2004, as of Sept 2004
SNF	(c)(2)(ii)	trending forward	CPI-U, inpatient hospital services component, seasonally adjusted	July 2004, as of Sept 2004
SNF	(c)(2)(ii)	trending forward	CPI-U, inpatient hospital services component, seasonally adjusted	August 2004, as of Sept 2004

Supplementary Table 1
Reasonable Charges Data Sources - V2.3

V2.3 Data Source.xls - By Data Source

Charge Type	Paragraph	Subject	Data Source	Edition
INPT	(b)(2)(iv)	trending forward	CPI-U, inpatient hospital services component, seasonally adjusted	January 2003, as of Sept 2004
INPT	(b)(2)(iv)	trending forward	CPI-U, inpatient hospital services component, seasonally adjusted	February 2003, as of Sept 2004
INPT	(b)(2)(iv)	trending forward	CPI-U, inpatient hospital services component, seasonally adjusted	March 2003, as of Sept 2004
INPT	(b)(2)(iv)	trending forward	CPI-U, inpatient hospital services component, seasonally adjusted	April 2003, as of Sept 2004
INPT	(b)(2)(iv)	trending forward	CPI-U, inpatient hospital services component, seasonally adjusted	June 2003, as of Sept 2004
INPT	(b)(2)(iv)	trending forward	CPI-U, inpatient hospital services component, seasonally adjusted	July 2003, as of Sept 2004
INPT	(b)(2)(iv)	trending forward	CPI-U, inpatient hospital services component, seasonally adjusted	August 2003, as of Sept 2004
INPT	(b)(2)(iv)	trending forward	CPI-U, inpatient hospital services component, seasonally adjusted	May 2004, as of Sept 2004
INPT	(b)(2)(iv)	trending forward	CPI-U, inpatient hospital services component, seasonally adjusted	June 2004, as of Sept 2004
INPT	(b)(2)(iv)	trending forward	CPI-U, inpatient hospital services component, seasonally adjusted	July 2004, as of Sept 2004
INPT	(b)(2)(iv)	trending forward	CPI-U, inpatient hospital services component, seasonally adjusted	August 2004, as of Sept 2004
SNF	(c)(2)(ii)	trending forward	CPI-U, inpatient hospital services component, seasonally adjusted	January 2003, as of Sept 2004
SNF	(c)(2)(ii)	trending forward	CPI-U, inpatient hospital services component, seasonally adjusted	February 2003, as of Sept 2004
SNF	(c)(2)(ii)	trending forward	CPI-U, inpatient hospital services component, seasonally adjusted	March 2003, as of Sept 2004
SNF	(c)(2)(ii)	trending forward	CPI-U, inpatient hospital services component, seasonally adjusted	April 2003, as of Sept 2004
SNF	(c)(2)(ii)	trending forward	CPI-U, inpatient hospital services component, seasonally adjusted	June 2003, as of Sept 2004
SNF	(c)(2)(ii)	trending forward	CPI-U, inpatient hospital services component, seasonally adjusted	July 2003, as of Sept 2004
SNF	(c)(2)(ii)	trending forward	CPI-U, inpatient hospital services component, seasonally adjusted	August 2003, as of Sept 2004
SNF	(c)(2)(ii)	trending forward	CPI-U, inpatient hospital services component, seasonally adjusted	May 2004, as of Sept 2004
SNF	(c)(2)(ii)	trending forward	CPI-U, inpatient hospital services component, seasonally adjusted	June 2004, as of Sept 2004
SNF	(c)(2)(ii)	trending forward	CPI-U, inpatient hospital services component, seasonally adjusted	July 2004, as of Sept 2004
SNF	(c)(2)(ii)	trending forward	CPI-U, inpatient hospital services component, seasonally adjusted	August 2004, as of Sept 2004
INPT	(b)(1)	National Volume	Ingenix, CMS Medicare Provider Analysis and Review (MedPAR) Record	2003
INPT	(b)(1)	National Total Days	Ingenix, CMS Medicare Provider Analysis and Review (MedPAR) Record	2003
INPT	(b)(1)	National ICU + CCU Days	Ingenix, CMS Medicare Provider Analysis and Review (MedPAR) Record	2003
INPT	(b)(1)	National Non-ICU Days	Ingenix, CMS Medicare Provider Analysis and Review (MedPAR) Record	2003
INPT	(b)(1)	National Semi Private Days	Ingenix, CMS Medicare Provider Analysis and Review (MedPAR) Record	2003
INPT	(b)(1)(i)	National Total Charges	Ingenix, CMS Medicare Provider Analysis and Review (MedPAR) Record	2003
INPT	(b)(2)	National Room & Board Charges	Ingenix, CMS Medicare Provider Analysis and Review (MedPAR) Record	2003
INPT	(b)(2)	National Private Room Charges	Ingenix, CMS Medicare Provider Analysis and Review (MedPAR) Record	2003
INPT	(b)(2)	National Semi Private Room Charges	Ingenix, CMS Medicare Provider Analysis and Review (MedPAR) Record	2003
INPT	(b)(2)	National Ward Charges	Ingenix, CMS Medicare Provider Analysis and Review (MedPAR) Record	2003
INPT	(b)(2)	National ICU Charges	Ingenix, CMS Medicare Provider Analysis and Review (MedPAR) Record	2003
INPT	(b)(2)	National CCU Charges	Ingenix, CMS Medicare Provider Analysis and Review (MedPAR) Record	2003
INPT	(b)(2)	National Ancillary Charges	Ingenix, CMS Medicare Provider Analysis and Review (MedPAR) Record	2003
INPT	(b)(2)	Effective Ancillary Charges	Ingenix, CMS Medicare Provider Analysis and Review (MedPAR) Record	2003
INPT	(b)(2)	National Total Charges per Volume	Ingenix, CMS Medicare Provider Analysis and Review (MedPAR) Record	2003
INPT	(b)(2)	National Avg LOS	Ingenix, CMS Medicare Provider Analysis and Review (MedPAR) Record	2003
INPT	(b)(2)(i)	National R&B as % of Total Charges	Ingenix, CMS Medicare Provider Analysis and Review (MedPAR) Record	2003
INPT	(b)(2)(i)	National Ancillary as % of Total Charges	Ingenix, CMS Medicare Provider Analysis and Review (MedPAR) Record	2003
INPT	(b)(1)	National Semi Private Days	Ingenix, CMS Medicare Provider Analysis and Review (MedPAR) Record	2003
INPT	(b)(1)	National Special Care Days	Ingenix, CMS Medicare Provider Analysis and Review (MedPAR) Record	2003

Supplementary Table 1
Reasonable Charges Data Sources - V2.3

V2.3 Data Source.xls - Abbreviations

Charge Type	Paragraph	Subject	Data Source	Edition
Charge Type Abbreviations			**Other Abbreviations**	
INPT = Acute inpatient facility charges			AVG = Average	
SNF = Skilled nursing facility / sub-acute inpatient facility charges			CMS = Centers for Medicare and Medicaid Services	
			CCU = Critical Care Unit	
			CPI-U = Consumer Price Index - All Urban Consumers	
			ICU = Intensive Care Unit	
			LOS = Length of Stay	
			MedPAR = Medicare Provider Analysis and Review	
			R&B = Room and Board	

Supplementary Table 2
Reasonable Charges Data Sources - V2.3 - Where To Obtain

V2.3 Data Sources - 2004 -12-2.xls - Obtain

Page 1 of 1

Database	Where To Obtain
CPI-U, various components, seasonally adjusted	Bureau of Labor Statistics Internet site, CPI section, http://www.bls.gov/cpi/
MedPAR custom reports	Ingenix, Inc., 2525 Lake Park Blvd., Salt Lake City, UT 84120
Abbreviations	
CPI-U = Consumer Price Index - All Urban Consumers	
MedPAR = Medicare Provider Analysis and Review	

Supplementary Table 3
VA Medical Facility Locations, Three-Digit ZIP Codes, and Provider-Based/Non-Provider-Based Designations

Sta #	VA Facility Location	ST	ZIP 3	VN	Type	PB
402	TOGUS, ME	ME	043	1	VAMC	PBH
402GA	CARIBOU, ME	ME	047	1	CBOC	NPB
402GB	CALAIS, ME	ME	046	1	CBOC	NPB
402GC	RUMFORD, ME	ME	042	1	CBOC	NPB
402GD	SACO, ME	ME	040	1	CBOC	NPB
402HB	BANGOR, ME	ME	044	1	CBOC	NPB
402HC	PORTLAND, ME	ME	041	1	CBOC	NPB
405	WHITE RIVER JCT, VT	VT	050	1	VAMC	PBH
405GA	BENNINGTON, VT	VT	052	1	CBOC	NPB
405HA	BURLINGTON, VT	VT	054	1	CBOC	NPB
405HC	SAINT JOHNSBURY, VT	VT	058	1	CBOC	NPB
405HD	NEWPORT, VT	VT	058	1	CBOC	NPB
405HF	RUTLAND, VT	VT	057	1	CBOC	NPB
405HG	WILDER, VT	VT	050	1	CBOC	NPB
436	FORT HARRISON, MT	MT	596	19	VAMC	PBH
436GA	ANACONDA, MT	MT	597	19	CBOC	NPB
436GB	GREAT FALLS, MT	MT	594	19	CBOC	NPB
436GC	MISSOULA, MT	MT	598	19	CBOC	NPB
436GD	BOZEMAN, MT	MT	597	19	CBOC	NPB
436GF	KALISPELL, MT	MT	599	19	CBOC	NPB
436GH	BILLINGS, MT	MT	591	19	CBOC	NPB
436GI	GLASGOW, MT	MT	592	19	CBOC	NPB
436GJ	MILES CITY, MT	MT	593	19	CBOC	NPB
436GK	SIDNEY, MT	MT	592	19	CBOC	NPB
437	FARGO, ND	ND	581	23	VAMC	PBH
437GA	GRAFTON, ND	ND	582	23	CBOC	NPB
437GB	BISMARCK, ND	ND	585	23	CBOC	NPB
437GC	FERGUS FALLS, MN	MN	565	23	CBOC	NPB
437GD	MINOT, ND	ND	587	23	CBOC	NPB
438	SIOUX FALLS, SD	SD	571	23	VAMC	PBH
438GC	SIOUX CITY, IA	IA	511	23	CBOC	NPB
438GD	ABERDEEN, SD	SD	574	23	CBOC	NPB
442	CHEYENNE, WY	WY	820	19	VAMC	PBH
442GB	SIDNEY, NE	NE	691	19	CBOC	NPB
442GC	FORT COLLINS, CO	CO	805	19	CBOC	NPB
442GD	GREELEY, CO	CO	806	19	CBOC	NPB
459	HONOLULU, HI	HI	968	21	VAMC	PBH
459GA	KAHULUI, HI	HI	967	21	CBOC	NPB
459GB	HILO, HI	HI	967	21	CBOC	NPB
459GC	KAILUA KONA, HI	HI	967	21	CBOC	NPB
459GD	LIHUE, HI	HI	967	21	CBOC	NPB
459GE	GUAM, GU	GU	969	21	CBOC	NPB
460	WILMINGTON, DE	DE	198	4	VAMC	PBH
460GA	MILLSBORO, DE	DE	199	4	CBOC	NPB
460HE	VENTNOR CITY, NJ	NJ	084	4	CBOC	NPB
460HG	VINELAND, NJ	NJ	083	4	CBOC	PBO
463	ANCHORAGE, AK	AK	995	20	IOC	PBO
463GA	FAIRBANKS, AK	AK	997	20	CBOC	NPB
463GB	KENAI, AK	AK	996	20	CBOC	NPB
501	ALBUQUERQUE, NM	NM	871	18	VAMC	PBH
501G2	LAS VEGAS, NM	NM	875	18	CBOC	NPB
501GA	ARTESIA, NM	NM	882	18	CBOC	NPB
501GB	FARMINGTON, NM	NM	874	18	CBOC	NPB

Supplementary Table 3
VA Medical Facility Locations, Three-Digit ZIP Codes,
and Provider-Based/Non-Provider-Based Designations

Sta #	VA Facility Location	ST	ZIP 3	VN	Type	PB
501GC	SILVER CITY, NM	NM	880	18	CBOC	NPB
501GD	GALLUP, NM	NM	873	18	CBOC	NPB
501GE	ESPANOLA, NM	NM	884	18	CBOC	NPB
501GH	TRUTH OR CONSEQUENCES, NM	NM	879	18	CBOC	NPB
501GI	ALAMOGORDO, NM	NM	883	18	CBOC	NPB
501GJ	DURANGO, CO	CO	813	18	CBOC	NPB
501GK	SANTA FE, NM	NM	875	18	CBOC	NPB
501HB	RATON, NM	NM	877	18	CBOC	NPB
502	ALEXANDRIA, LA	LA	713	16	VAMC	PBH
502GA	JENNINGS, LA	LA	705	16	CBOC	NPB
502GB	LAFAYETTE, LA	LA	705	16	CBOC	NPB
503	ALTOONA, PA	PA	166	4	VAMC	PBH
503GA	JOHNSTOWN, PA	PA	159	4	CBOC	PBO
503GB	DU BOIS, PA	PA	158	4	CBOC	NPB
503GC	STATE COLLEGE, PA	PA	168	4	CBOC	PBO
504	AMARILLO, TX	TX	791	18	VAMC	PBH
504BY	LUBBOCK, TX	TX	794	18	CBOC	NPB
504BZ	CLOVIS, NM	NM	881	18	CBOC	NPB
504GA	CHILDRESS, TX	TX	792	18	CBOC	NPB
504GB	LIBERAL, KS	KS	679	18	CBOC	NPB
504HB	STRATFORD, TX	TX	790	18	CBOC	NPB
506	ANN ARBOR, MI	MI	481	11	VAMC	PBH
506GA	TOLEDO, OH	OH	436	11	CBOC	NPB
506GB	FLINT, MI	MI	485	11	CBOC	NPB
506GC	JACKSON, MI	MI	492	11	CBOC	NPB
508	ATLANTA/DECATUR, GA	GA	300	7	VAMC	PBH
508GA	ATLANTA/MIDTOWN, GA	GA	303	7	CBOC	PBO
508GE	OAKWOOD/NE CORRIDOR, GA	GA	305	7	CBOC	PBO
508GF	SMYRNA, GA	GA	300	7	CBOC	PBO
508GH	LAWRENCEVILLE, GA	GA	300	7	CBOC	PBO
509	AUGUSTA DOWNTOWN, GA	GA	309	7	VAMC	PBH
509A0	AUGUSTA UPTOWN, GA	GA	309	7	VAMC	PBH
512	BALTIMORE, MD	MD	212	5	VAMC	PBH
512A5	PERRY POINT, MD	MD	219	5	VAMC	PBH
512GA	CAMBRIDGE, MD	MD	216	5	CBOC	NPB
512GC	GLEN BURNIE, MD	MD	210	5	CBOC	PBO
512GD	BALTIMORE/LOCH RAVEN, MD	MD	212	5	CBOC	PBO
512GE	POCOMOKE CITY, MD	MD	218	5	CBOC	NPB
512GF	FORT HOWARD CBOC, MD	MD	210	5	CBOC	PBO
512PA	PERRY POINT RTP'S, MD	MD	219	5	CBOC	NPB
515	BATTLE CREEK, MI	MI	490	11	VAMC	PBH
515BY	GRAND RAPIDS, MI	MI	495	11	CBOC	NPB
515GA	MUSKEGON, MI	MI	494	11	CBOC	NPB
515GB	LANSING, MI	MI	489	11	CBOC	NPB
515GC	BENTON HARBOR, MI	MI	490	11	CBOC	NPB
516	BAY PINES, FL	FL	337	8	VAMC	PBH
516BZ	FORT MYERS, FL	FL	339	8	CBOC	NPB
516GA	SARASOTA, FL	FL	342	8	CBOC	NPB
516GB	SAINT PETERSBURG, FL	FL	337	8	CBOC	PBO
516GC	DUNEDIN, FL	FL	346	8	CBOC	PBO
516GD	ELLENTON, FL	FL	342	8	CBOC	PBO
516GE	PORT CHARLOTTE, FL	FL	339	8	CBOC	NPB
516GF	NAPLES, FL	FL	341	8	CBOC	NPB

Supplementary Table 3
VA Medical Facility Locations, Three-Digit ZIP Codes, and Provider-Based/Non-Provider-Based Designations

Sta #	VA Facility Location	ST	ZIP 3	VN	Type	PB
516GH	AVON PARK, FL	FL	338	8	CBOC	NPB
517	BECKLEY, WV	WV	258	6	VAMC	PBH
517GA	GASSAWAY, WV	WV	266	6	CBOC	NPB
518	BEDFORD, MA	MA	017	1	VAMC	PBH
518GA	LYNN, MA	MA	019	1	CBOC	PBO
518GB	HAVERHILL, MA	MA	018	1	CBOC	PBO
518GC	WINCHINDON, MA	MA	014	1	CBOC	NPB
518GD	LOWELL, MA	MA	018	1	CBOC	PBO
518GE	GLOUCESTER, MA	MA	019	1	CBOC	PBO
518GG	FITCHBURG, MA	MA	014	1	CBOC	PBO
519	BIG SPRING, TX	TX	797	18	VAMC	PBH
519GA	ODESSA, TX	TX	797	18	CBOC	NPB
519GB	HOBBS, NM	NM	882	18	CBOC	NPB
519GD	FORT STOCKTON, TX	TX	797	18	CBOC	NPB
519HC	ABILENE, TX	TX	796	18	CBOC	NPB
519HD	STAMFORD, TX	TX	795	18	CBOC	NPB
519HF	SAN ANGELO, TX	TX	769	18	CBOC	NPB
520	BILOXI, MS	MS	395	16	VAMC	PBH
520A0	GULFPORT, MS	MS	395	16	VAMC	PBH
520BZ	PENSACOLA, FL	FL	325	16	CBOC	NPB
520GA	MOBILE, AL	AL	366	16	CBOC	NPB
520GB	PANAMA CITY, FL	FL	324	16	CBOC	NPB
521	BIRMINGHAM, AL	AL	352	7	VAMC	PBH
521GA	HUNTSVILLE, AL	AL	358	7	CBOC	NPB
521GB	DECATUR, AL	AL	356	7	CBOC	NPB
521GC	FLORENCE, AL	AL	356	7	CBOC	NPB
521GD	RAINBOW CITY, AL	AL	359	7	CBOC	NPB
521GE	ANNISTON, AL	AL	362	7	CBOC	NPB
521GF	JASPER, AL	AL	355	7	CBOC	NPB
523	BOSTON, MA	MA	021	1	VAMC	PBH
523A4	WEST ROXBURY, MA	MA	021	1	VAMC	PBH
523A5	BROCKTON, MA	MA	024	1	VAMC	PBH
523BY	LOWELL, MA	MA	018	1	CBOC	PBO
523BZ	BOSTON CBOC, MA	MA	021	1	CBOC	PBO
523GA	FRAMINGHAM, MA	MA	017	1	CBOC	PBO
523GB	WORCESTER, MA	MA	016	1	CBOC	PBO
523GC	QUINCY, MA	MA	021	1	CBOC	PBO
523GD	PLYMOUTH, MA	MA	023	1	CBOC	NPB
523GE	DORCHESTER, MA	MA	021	1	CBOC	PBO
526	BRONX, NY	NY	104	3	VAMC	PBH
526GA	WHITE PLAINS/BRONX, NY	NY	106	3	CBOC	PBO
526GB	YONKERS, NY	NY	107	3	CBOC	PBO
526GC	SOUTH BRONX, NY	NY	104	3	CBOC	PBO
526GD	QUEENS, NY	NY	111	3	CBOC	PBO
528	BUFFALO, NY	NY	142	2	VAMC	PBH
528A4	BATAVIA, NY	NY	140	2	VAMC	PBH
528A5	CANANDAIGUA, NY	NY	144	2	VAMC	PBH
528A6	BATH, NY	NY	148	2	VAMC	PBH
528A7	SYRACUSE, NY	NY	132	2	VAMC	PBH
528A8	ALBANY, NY	NY	122	2	VAMC	PBH
528G1	MALONE, NY	NY	129	2	CBOC	NPB
528G2	ELIZABETHTOWN, NY	NY	129	2	CBOC	NPB
528G3	BAINBRIDGE, NY	NY	137	2	CBOC	NPB

Supplementary Table 3
VA Medical Facility Locations, Three-Digit ZIP Codes,
and Provider-Based/Non-Provider-Based Designations

Sta #	VA Facility Location	ST	ZIP 3	VN	Type	PB
528G4	ELMIRA, NY	NY	149	2	CBOC	PBO
528G5	AUBURN, NY	NY	130	2	CBOC	NPB
528G6	FONDA, NY	NY	120	2	CBOC	NPB
528G7	CATSKILL, NY	NY	124	2	CBOC	NPB
528G8	WELLSVILLE, NY	NY	148	2	CBOC	NPB
528G9	CORTLAND, NY	NY	130	2	CBOC	NPB
528GB	JAMESTOWN, NY	NY	147	2	CBOC	NPB
528GC	DUNKIRK, NY	NY	140	2	CBOC	NPB
528GD	NIAGARA FALLS, NY	NY	143	2	CBOC	NPB
528GE	ROCHESTER, NY	NY	146	2	CBOC	PBO
528GK	LOCKPORT, NY	NY	140	2	CBOC	NPB
528GL	MASSENA, NY	NY	136	2	CBOC	NPB
528GM	ROME, NY	NY	134	2	CBOC	NPB
528GN	BINGHAMTON, NY	NY	139	2	CBOC	NPB
528GO	WATERTOWN/FORT DRUM, NY	NY	136	2	CBOC	NPB
528GP	OSWEGO, NY	NY	131	2	CBOC	NPB
528GQ	LACKAWANNA, NY	NY	142	2	CBOC	NPB
528GR	OLEAN, NY	NY	147	2	CBOC	NPB
528GT	GLENS FALLS, NY	NY	128	2	CBOC	NPB
528GV	PLATTSBURGH, NY	NY	129	2	CBOC	NPB
528GW	SCHENECTADY, NY	NY	123	2	CBOC	NPB
528GX	TROY, NY	NY	121	2	CBOC	NPB
528GY	CLIFTON PARK, NY	NY	120	2	CBOC	PBO
528GZ	KINGSTON, NY	NY	124	2	CBOC	NPB
528J1	WARSAW, NY	NY	145	2	CBOC	PBO
529	BUTLER, PA	PA	160	4	VAMC	PBH
529GA	MERCER, PA	PA	161	4	CBOC	PBO
529GB	NEW CASTLE, PA	PA	161	4	CBOC	PBO
529GC	KITTANNING, PA	PA	162	4	CBOC	NPB
529GD	KNOX, PA	PA	162	4	CBOC	NPB
531	BOISE, ID	ID	837	20	VAMC	PBH
531GD	ONTARIO, OR	OR	979	20	CBOC	NPB
531GE	TWIN FALLS, ID	ID	833	20	CBOC	NPB
534	CHARLESTON, SC	SC	294	7	VAMC	PBH
534BY	SAVANNAH, GA	GA	314	7	CBOC	NPB
534GB	MYRTLE BEACH, SC	SC	295	7	CBOC	NPB
534GC	BEAUFORT, SC	SC	299	7	CBOC	NPB
537	CHICAGO WEST SIDE, IL	IL	606	12	VAMC	PBH
537BY	CROWN POINT, IN	IN	463	12	CBOC	NPB
537GA	CHICAGO HEIGHTS, IL	IL	604	12	CBOC	PBO
537GD	LAKESIDE CBOC, IL	IL	606	12	VAMC	PBO
537HA	CHICAGO/WOODLAWN, IL	IL	606	12	CBOC	PBO
538	CHILLICOTHE, OH	OH	456	10	VAMC	PBH
538GA	ATHENS, OH	OH	457	10	CBOC	NPB
538GB	PORTSMOUTH, OH	OH	456	10	CBOC	NPB
538GC	MARIETTA, OH	OH	457	10	CBOC	NPB
538GD	LANCASTER, OH	OH	431	10	CBOC	PBO
539	CINCINNATI, OH	OH	452	10	VAMC	PBH
539DT	GEORGETOWN VET HOME, OH	OH	451	10	VAMC	PBH
539GA	BELLEVUE, KY	KY	410	10	CBOC	PBO
539GB	CINCINNATI CBOC, OH	OH	452	10	CBOC	PBO
539GC	LAWRENCEBURG, IN	IN	470	10	CBOC	PBO
540	CLARKSBURG, WV	WV	263	4	VAMC	PBH

Supplementary Table 3
VA Medical Facility Locations, Three-Digit ZIP Codes,
and Provider-Based/Non-Provider-Based Designations

Sta #	VA Facility Location	ST	ZIP 3	VN	Type	PB
540GA	PARSONS, WV	WV	262	4	CBOC	NPB
540GB	PARKERSBURG, WV	WV	261	4	CBOC	NPB
540GC	GASSAWAY, WV	WV	266	4	CBOC	NPB
541	CLEVELAND WADE PARK, OH	OH	441	10	VAMC	PBH
541A0	CLEVELAND BRECKSVILLE, OH	OH	441	10	VAMC	PBH
541BY	CANTON, OH	OH	447	10	CBOC	NPB
541BZ	YOUNGSTOWN, OH	OH	445	10	CBOC	NPB
541GB	LORAIN, OH	OH	440	10	CBOC	PBO
541GC	SANDUSKY, OH	OH	448	10	CBOC	NPB
541GD	MANSFIELD, OH	OH	449	10	CBOC	NPB
541GE	CLEVELAND CBOC, OH	OH	441	10	CBOC	PBO
541GF	PAINESVILLE, OH	OH	440	10	CBOC	PBO
541GG	AKRON, OH	OH	443	10	CBOC	NPB
541GH	EAST LIVERPOOL, OH	OH	439	10	CBOC	NPB
541GI	WARREN, OH	OH	444	10	CBOC	NPB
542	COATESVILLE, PA	PA	193	4	VAMC	PBH
542GA	SPRINGFIELD, PA	PA	190	4	CBOC	PBO
542GB	PHILADELPHIA CBOC, PA	PA	191	4	CBOC	NPB
542GE	SPRING CITY, PA	PA	194	4	CBOC	PBO
542GG	COATESVILLE MSCEC, PA	PA	193	4	CBOC	PBO
542GH	COATESVILLE CBOC, PA	PA	193	4	CBOC	PBO
544	COLUMBIA, SC	SC	292	7	VAMC	PBH
544BZ	GREENVILLE, SC	SC	296	7	CBOC	NPB
544GB	FLORENCE, SC	SC	295	7	CBOC	NPB
544GC	ROCK HILL, SC	SC	297	7	CBOC	NPB
544GD	ANDERSON, SC	SC	296	7	CBOC	NPB
544GE	ORANGEBURG, SC	SC	291	7	CBOC	NPB
544GF	SUMTER, SC	SC	291	7	CBOC	NPB
546	MIAMI, FL	FL	331	8	VAMC	PBH
546BZ	OAKLAND PARK, FL	FL	333	8	CBOC	PBO
546GA	MIAMI CBOC, FL	FL	331	8	CBOC	PBO
546GB	KEY WEST, FL	FL	330	8	CBOC	NPB
546GC	HOMESTEAD, FL	FL	330	8	CBOC	NPB
546GD	PEMBROKE PINES, FL	FL	330	8	CBOC	PBO
546GE	KEY LARGO, FL	FL	330	8	CBOC	NPB
546GF	HALLANDALE, FL	FL	330	8	CBOC	PBO
546GG	CORAL SPRINGS, FL	FL	330	8	CBOC	NPB
546GH	DEERFIELD BEACH, FL	FL	334	8	CBOC	NPB
548	WEST PALM BEACH, FL	FL	334	8	VAMC	PBH
548GA	FORT PIERCE, FL	FL	349	8	CBOC	NPB
548GB	DELRAY BEACH, FL	FL	334	8	CBOC	NPB
548GC	STUART, FL	FL	349	8	CBOC	NPB
548GD	BOCA RATON, FL	FL	334	8	CBOC	NPB
548GE	VERO BEACH, FL	FL	329	8	CBOC	NPB
548GF	OKEECHOBEE, FL	FL	349	8	CBOC	NPB
549	DALLAS, TX	TX	752	17	VAMC	PBH
549A4	BONHAM, TX	TX	754	17	VAMC	PBH
549BY	FORT WORTH SOC, TX	TX	761	17	CBOC	PBO
549GA	TYLER, TX	TX	757	17	CBOC	NPB
549GC	BONHAM CBOC, TX	TX	754	17	CBOC	NPB
549GD	DENTON, TX	TX	762	17	CBOC	NPB
549GE	DECATUR, TX	TX	762	17	CBOC	NPB
549GF	EASTLAND, TX	TX	764	17	CBOC	NPB

Supplementary Table 3
VA Medical Facility Locations, Three-Digit ZIP Codes, and Provider-Based/Non-Provider-Based Designations

Sta #	VA Facility Location	ST	ZIP 3	VN	Type	PB
549GH	GREENVILLE, TX	TX	754	17	CBOC	NPB
549GI	CLEBURNE, TX	TX	760	17	CBOC	NPB
550	DANVILLE, IL	IL	618	11	VAMC	PBH
550BY	PEORIA, IL	IL	616	11	CBOC	NPB
550GA	DECATUR, IL	IL	625	11	CBOC	NPB
550GC	LAFAYETTE, IN	IN	479	11	CBOC	NPB
550GD	SPRINGFIELD, IL	IL	627	11	CBOC	NPB
550GE	EFFINGHAM, IL	IL	624	11	CBOC	NPB
552	DAYTON, OH	OH	454	10	VAMC	PBH
552GA	MIDDLETOWN, OH	OH	450	10	CBOC	PBO
552GB	LIMA, OH	OH	458	10	CBOC	NPB
552GC	RICHMOND, IN	IN	473	10	CBOC	NPB
552GD	SPRINGFIELD, OH	OH	455	10	CBOC	PBO
553	DETROIT, MI	MI	482	11	VAMC	PBH
553GA	YALE, MI	MI	480	11	CBOC	NPB
553GB	PONTIAC, MI	MI	483	11	CBOC	NPB
554	DENVER, CO	CO	802	19	VAMC	PBH
554GB	AURORA, CO	CO	800	19	CBOC	PBO
554GC	LAKEWOOD, CO	CO	802	19	CBOC	PBO
554GD	PUEBLO, CO	CO	810	19	CBOC	NPB
554GE	COLORADO SPRINGS, CO	CO	809	19	CBOC	NPB
554GF	ALAMOSA, CO	CO	811	19	CBOC	NPB
554GG	LA JUNTA, CO	CO	810	19	CBOC	NPB
554GH	LAMAR, CO	CO	810	19	CBOC	NPB
554HB	FORT MORGAN, CO	CO	807	19	CBOC	NPB
556	NORTH CHICAGO, IL	IL	600	12	VAMC	PBH
556GA	EVANSTON, IL	IL	602	12	CBOC	PBO
556GC	MCHENRY, IL	IL	600	12	CBOC	PBO
556GD	KENOSHA, WI	WI	531	12	CBOC	PBO
557	DUBLIN, GA	GA	310	7	VAMC	PBH
557GA	MACON, GA	GA	312	7	CBOC	NPB
557GB	ALBANY, GA	GA	317	7	CBOC	NPB
558	DURHAM, NC	NC	277	6	VAMC	PBH
558GA	GREENVILLE, NC	NC	278	6	CBOC	NPB
558GB	RALEIGH, NC	NC	276	6	CBOC	NPB
558GC	MOOREHEAD CITY, NC	NC	285	6	CBOC	NPB
561	EAST ORANGE, NJ	NJ	070	3	VAMC	PBH
561A4	LYONS, NJ	NJ	079	3	VAMC	PBH
561BY	NEWARK SAC, NJ	NJ	071	3	CBOC	PBO
561BZ	BRICK, NJ	NJ	087	3	CBOC	NPB
561GA	TRENTON, NJ	NJ	086	3	CBOC	PBO
561GB	ELIZABETH, NJ	NJ	072	3	CBOC	PBO
561GD	HACKENSACK, NJ	NJ	076	3	CBOC	PBO
561GE	JERSEY CITY, NJ	NJ	073	3	CBOC	PBO
561GF	NEW BRUNSWICK, NJ	NJ	089	3	CBOC	PBO
561GG	NEWARK CBOC, NJ	NJ	071	3	CBOC	PBO
561GH	MORRISTOWN, NJ	NJ	079	3	CBOC	PBO
561GI	FORT MONMOUTH, NJ	NJ	077	3	CBOC	PBO
561GJ	PATTERSON, NJ	NJ	075	3	CBOC	PBO
561HB	JAMESBURG, NJ	NJ	088	3	CBOC	PBO
562	ERIE, PA	PA	165	4	VAMC	PBH
562GA	MEADVILLE, PA	PA	163	4	CBOC	PBO
562GB	ASHTABULA, OH	OH	440	4	CBOC	NPB

Supplementary Table 3
VA Medical Facility Locations, Three-Digit ZIP Codes, and Provider-Based/Non-Provider-Based Designations

Sta #	VA Facility Location	ST	ZIP 3	VN	Type	PB
562GC	SMETHPORT, PA	PA	167	4	CBOC	NPB
564	FAYETTEVILLE, AR	AR	727	16	VAMC	PBH
564BY	MOUNT VERNON, MO	MO	657	16	CBOC	NPB
564GA	HARRISON, AR	AR	726	16	CBOC	NPB
564GB	FORT SMITH, AR	AR	729	16	CBOC	NPB
565	FAYETTEVILLE, NC	NC	283	6	VAMC	PBH
565GA	JACKSONVILLE UCJ, NC	NC	285	6	CBOC	NPB
565GC	WILMINGTON, NC	NC	284	6	CBOC	NPB
568	FORT MEADE, SD	SD	577	23	VAMC	PBH
568A4	HOT SPRINGS, SD	SD	577	23	VAMC	PBH
568GA	RAPID CITY, SD	SD	577	23	CBOC	PBO
568GB	PIERRE, SD	SD	575	23	CBOC	NPB
568HA	NEWCASTLE, WY	WY	827	23	CBOC	NPB
568HB	RUSHVILLE, NE	NE	693	23	CBOC	NPB
568HC	ALLIANCE, NE	NE	693	23	CBOC	NPB
568HH	GERING, NE	NE	693	23	CBOC	NPB
568HJ	ROSEBUD, SD	SD	575	23	CBOC	NPB
568HK	MCLAUGHLIN, SD	SD	576	23	CBOC	NPB
568HM	EAGLE BUTTE, SD	SD	576	23	CBOC	NPB
568HN	LAME DEER, MT	MT	590	23	CBOC	NPB
568HP	WINNER, SD	SD	575	23	CBOC	NPB
570	FRESNO, CA	CA	937	21	VAMC	PBH
570GA	ATWATER, CA	CA	953	21	CBOC	NPB
570GB	TULARE, CA	CA	932	21	CBOC	NPB
573	GAINESVILLE, FL	FL	326	8	VAMC	PBH
573A4	LAKE CITY, FL	FL	320	8	VAMC	PBH
573BY	JACKSONVILLE, FL	FL	322	8	CBOC	NPB
573BZ	DAYTONA BEACH, FL	FL	321	8	CBOC	NPB
573GA	VALDOSTA, GA	GA	316	8	CBOC	NPB
573GD	OCALA, FL	FL	344	8	CBOC	PBO
573GE	SAINT AUGUSTINE, FL	FL	320	8	CBOC	NPB
573GF	TALLAHASSEE, FL	FL	323	8	CBOC	NPB
573GG	INVERNESS, FL	FL	344	8	CBOC	NPB
573GH	LEESBURG, FL	FL	347	8	CBOC	NPB
575	GRAND JUNCTION, CO	CO	815	19	VAMC	PBH
575GA	MONTROSE, CO	CO	814	19	CBOC	NPB
578	HINES, IL	IL	601	12	VAMC	PBH
578GA	JOLIET, IL	IL	604	12	CBOC	PBO
578GB	OAK PARK, IL	IL	603	12	CBOC	PBO
578GC	MANTENO, IL	IL	609	12	CBOC	NPB
578GD	AURORA, IL	IL	605	12	CBOC	PBO
578GE	ELGIN, IL	IL	601	12	CBOC	PBO
578GF	LA SALLE, IL	IL	613	12	CBOC	NPB
578GG	OAK LAWN, IL	IL	604	12	CBOC	NPB
580	HOUSTON, TX	TX	770	16	VAMC	PBH
580BY	BEAUMONT, TX	TX	777	16	CBOC	NPB
580BZ	LUFKIN, TX	TX	759	16	CBOC	NPB
581	HUNTINGTON, WV	WV	257	9	VAMC	PBH
581GA	PRESTONSBURG, KY	KY	416	9	CBOC	NPB
581GB	CHARLESTON, WV	WV	253	9	CBOC	NPB
581GD	WILLIAMSON, WV	WV	256	9	CBOC	NPB
583	INDIANAPOLIS, IN	IN	462	11	VAMC	PBH
583GA	TERRE HAUTE, IN	IN	478	11	CBOC	NPB

Supplementary Table 3
VA Medical Facility Locations, Three-Digit ZIP Codes, and Provider-Based/Non-Provider-Based Designations

Sta #	VA Facility Location	ST	ZIP 3	VN	Type	PB
583GB	BLOOMINGTON, IN	IN	474	11	CBOC	NPB
585	IRON MOUNTAIN, MI	MI	498	12	VAMC	PBH
585GA	HANCOCK/PORTAGE, MI	MI	499	12	CBOC	NPB
585GB	RHINELANDER, WI	WI	545	12	CBOC	NPB
585GC	MENOMINEE, MI	MI	498	12	CBOC	NPB
585GD	IRONWOOD, MI	MI	499	12	CBOC	NPB
585HA	MARQUETTE, MI	MI	498	12	CBOC	NPB
585HB	SAULT SAINTE MARIE, MI	MI	497	12	CBOC	NPB
586	JACKSON, MS	MS	392	16	VAMC	PBH
586GA	KOSCIUSKO, MS	MS	390	16	CBOC	NPB
586GB	MERIDIAN, MS	MS	393	16	CBOC	NPB
586GC	GREENVILLE, MS	MS	387	16	CBOC	NPB
586GD	HATTIESBURG, MS	MS	394	16	CBOC	NPB
586GE	NATCHEZ, MS	MS	391	16	CBOC	NPB
586GF	COLUMBUS, MS	MS	397	16	CBOC	NPB
589	KANSAS CITY, MO	MO	641	15	VAMC	PBH
589A4	COLUMBIA, MO	MO	652	15	VAMC	PBH
589A5	TOPEKA, KS	KS	666	15	VAMC	PBH
589A6	LEAVENWORTH, KS	KS	660	15	VAMC	PBH
589A7	WICHITA, KS	KS	672	15	VAMC	PBH
589DQ	WICHITA NON-VA HOSP, KS	KS	627	15	CMC	PBH
589DS	KANSAS CITY NON-VA HOSPITAL	KS	641	15	CMC	PBH
589G1	WARRENSBURG, MO	MO	640	15	CBOC	NPB
589G2	DODGE CITY, KS	KS	678	15	CBOC	NPB
589G3	LIBERAL, KS	KS	679	15	CBOC	NPB
589G4	HAYS, KS	KS	676	15	CBOC	NPB
589G5	PARSONS, KS	KS	673	15	CBOC	NPB
589G6	SALINA, KS	KS	674	15	CBOC	NPB
589GB	BELTON, MO	MO	640	15	CBOC	PBO
589GC	PAOLA, KS	KS	660	15	CBOC	NPB
589GD	NEVADA, MO	MO	647	15	CBOC	NPB
589GE	KIRKSVILLE, MO	MO	635	15	CBOC	NPB
589GF	FORT LEONARD WOOD, MO	MO	654	15	CBOC	NPB
589GH	CAMDENTON, MO	MO	650	15	CBOC	NPB
589GI	SAINT JOSEPH, MO	MO	645	15	CBOC	PBO
589GJ	KANSAS CITY/WYANDOTTE, KS	KS	661	15	CBOC	PBO
589GK	ABILENE, KS	KS	674	15	CBOC	NPB
589GM	CHANUTE, KS	KS	667	15	CBOC	NPB
589GN	EMPORIA, KS	KS	668	15	CBOC	NPB
589GO	FORT RILEY, KS	KS	664	15	CBOC	NPB
589GP	GARNETT, KS	KS	660	15	CBOC	NPB
589GQ	HOLTON, KS	KS	664	15	CBOC	NPB
589GR	JUNCTION CITY, KS	KS	664	15	CBOC	NPB
589GS	RUSSELL, KS	KS	676	15	CBOC	NPB
589GT	SENECA, KS	KS	665	15	CBOC	NPB
589GU	LAWRENCE, KS	KS	660	15	CBOC	NPB
589GV	FORT SCOTT, KS	KS	667	15	CBOC	NPB
589GW	SALINA, KS	KS	674	15	CBOC	NPB
589GX	MEXICO, MO	MO	652	15	CBOC	PBO
589GY	SAINT JAMES, MO	MO	655	15	CBOC	NPB
589GZ	CAMERON, MO	MO	644	15	CBOC	NPB
590	HAMPTON, VA	VA	236	6	VAMC	PBH
590GA	NORFOLK, VA	VA	235	6	CBOC	PBO

Supplementary Table 3
VA Medical Facility Locations, Three-Digit ZIP Codes, and Provider-Based/Non-Provider-Based Designations

Sta #	VA Facility Location	ST	ZIP 3	VN	Type	PB
593	LAS VEGAS, NV	NV	891	22	VAMC	PBH
593GA	LAS VEGAS CBOC, NV	NV	891	22	CBOC	PBO
593GB	HENDERSON, NV	NV	890	22	CBOC	PBO
593GC	PAHRUMP, NV	NV	890	22	CBOC	NPB
595	LEBANON, PA	PA	170	4	VAMC	PBH
595GA	CAMP HILL, PA	PA	170	4	CBOC	PBO
595GB	POTTSVILLE/SCHUYLKILL/SHENA	PA	179	4	CBOC	PBO
595GC	LANCASTER, PA	PA	176	4	CBOC	PBO
595GD	READING, PA	PA	196	4	CBOC	PBO
595GE	YORK, PA	PA	174	4	CBOC	PBO
596A0	LEXINGTON LEESTOWN, KY	KY	405	9	VAMC	PBH
596A4	LEXINGTON COOPER DRIVE, KY	KY	405	9	VAMC	PBH
596GA	SOMERSET, KY	KY	425	9	CBOC	NPB
596HA	LEXINGTON MSORC, KY	KY	405	9	CBOC	PBO
598	LITTLE ROCK, AR	AR	722	16	VAMC	PBH
598A0	NORTH LITTLE ROCK, AR	AR	721	16	VAMC	PBH
598GA	MOUNTAIN HOME, AR	AR	726	16	CBOC	NPB
598GB	EL DORADO, AR	AR	717	16	CBOC	NPB
598GC	HOT SPRINGS, AR	AR	719	16	CBOC	NPB
598GD	MENA, AR	AR	719	16	CBOC	NPB
600	LONG BEACH, CA	CA	908	22	VAMC	PBH
600GA	ANAHEIM, CA	CA	928	22	CBOC	PBO
600GB	SANTA ANA, CA	CA	927	22	CBOC	PBO
600GC	LONG BEACH CBOC, CA	CA	908	22	CBOC	PBO
600GD	SANTA FE SPRINGS, CA	CA	906	22	CBOC	PBO
603	LOUISVILLE, KY	KY	402	9	VAMC	PBH
603GA	FORT KNOX, KY	KY	401	9	CBOC	NPB
603GB	NEW ALBANY, IN	IN	471	9	CBOC	NPB
603GC	LOUISVILLE CBOC, KY	KY	402	9	CBOC	PBO
605	LOMA LINDA, CA	CA	923	22	VAMC	PBH
605GA	VICTORVILLE, CA	CA	923	22	CBOC	PBO
605GB	SUN CITY, CA	CA	923	22	CBOC	PBO
605GC	PALM DESERT, CA	CA	922	22	CBOC	NPB
605GD	CORONA, CA	CA	928	22	CBOC	PBO
605GE	UPLAND, CA	CA	917	22	CBOC	PBO
607	MADISON, WI	WI	537	12	VAMC	PBH
607GC	JANESVILLE, WI	WI	535	12	CBOC	NPB
607GD	BARABOO, WI	WI	539	12	CBOC	PBO
607GE	BEAVER DAM, WI	WI	539	12	CBOC	NPB
607GF	FREEPORT, IL	IL	610	12	CBOC	NPB
607HA	ROCKFORD, IL	IL	611	12	CBOC	NPB
608	MANCHESTER, NH	NH	031	1	VAMC	PBH
608GA	PORTSMOUTH, NH	NH	038	1	CBOC	PBO
608GC	WOLFEBORO, NH	NH	038	1	CBOC	NPB
608GD	CONWAY, NH	NH	038	1	CBOC	NPB
608HA	TILTON, NH	NH	032	1	CBOC	PBO
610	MARION, IN	IN	469	11	VAMC	PBH
610A4	FORT WAYNE, IN	IN	468	11	VAMC	PBH
610GA	SOUTH BEND, IN	IN	466	11	CBOC	NPB
610GB	MUNCIE, IN	IN	473	11	CBOC	NPB
612	MARTINEZ, CA	CA	945	21	VAMC	PBH
612A4	SACRAMENTO/MATHER AFB, CA	CA	958	21	VAMC	PBH
612B4	REDDING, CA	CA	960	21	CBOC	NPB

Supplementary Table 3
VA Medical Facility Locations, Three-Digit ZIP Codes, and Provider-Based/Non-Provider-Based Designations

Sta #	VA Facility Location	ST	ZIP 3	VN	Type	PB
612BY	OAKLAND, CA	CA	946	21	CBOC	PBO
612CZ	TRAVIS AFB, CA	CA	945	21	CBOC	PBO
612GD	FAIRFIELD, CA	CA	945	21	CBOC	PBO
612GE	MARE ISLAND, CA	CA	945	21	CBOC	PBO
612GF	MARTINEZ CBOC, CA	CA	945	21	CBOC	PBO
612GG	CHICO, CA	CA	959	21	CBOC	NPB
612GH	MCCLELLAN AFB, CA	CA	956	21	CBOC	PBO
613	MARTINSBURG, WV	WV	254	5	VAMC	PBH
613GA	CUMBERLAND, MD	MD	215	5	CBOC	NPB
613GB	HAGERSTOWN, MD	MD	217	5	CBOC	PBO
613GC	STEPHENS CITY, VA	VA	226	5	CBOC	PBO
613GD	FRANKLIN, WV	WV	268	5	CBOC	NPB
613GE	PETERSBURG, WV	WV	268	5	CBOC	NPB
613GF	HARRISONBURG, VA	VA	228	5	CBOC	NPB
614	MEMPHIS, TN	TN	381	9	VAMC	PBH
614GA	SMITHVILLE, MS	MS	388	9	CBOC	NPB
614GB	JONESBORO, AR	AR	724	9	CBOC	NPB
614GC	BYHALIA, MS	MS	386	9	CBOC	NPB
614GD	SAVANNAH, TN	TN	383	9	CBOC	NPB
618	MINNEAPOLIS, MN	MN	554	23	VAMC	PBH
618BY	SUPERIOR, WI	WI	548	23	CBOC	NPB
618GA	MANKATO, MN	MN	560	23	CBOC	NPB
618GB	HIBBING, MN	MN	557	23	CBOC	NPB
618GD	SAINT PAUL, MN	MN	551	23	CBOC	PBO
618GE	CHIPPEWA FALLS, WI	WI	547	23	CBOC	NPB
618GG	ROCHESTER, MN	MN	559	23	CBOC	NPB
619	MONTGOMERY, AL	AL	361	7	VAMC	PBH
619A4	TUSKEGEE, AL	AL	360	7	VAMC	PBH
619GA	COLUMBUS, GA	GA	319	7	CBOC	NPB
619GB	DOTHAN, AL	AL	363	7	CBOC	NPB
619GC	DOTHAN MHC, AL	AL	363	7	CBOC	NPB
620	MONTROSE, NY	NY	105	3	VAMC	PBH
620A4	CASTLE POINT, NY	NY	125	3	VAMC	PBH
620GA	NEW CITY, NY	NY	109	3	CBOC	PBO
620GB	CARMEL, NY	NY	105	3	CBOC	PBO
620GD	WALLKILL, NY	NY	125	3	CBOC	PBO
620GE	PORT JERVIS, NY	NY	127	3	CBOC	NPB
620GF	HARRIS, NY	NY	127	3	CBOC	NPB
620GG	POUGHKEEPSIE, NY	NY	126	3	CBOC	PBO
621	MOUNTAIN HOME, TN	TN	376	9	VAMC	PBH
621GA	ROGERSVILLE, TN	TN	378	9	CBOC	NPB
621GB	MOUNTAIN CITY, TN	TN	376	9	CBOC	NPB
621GC	NORTON, VA	VA	242	9	CBOC	NPB
621GD	SAINT CHARLES, VA	VA	242	9	CBOC	NPB
623	MUSKOGEE, OK	OK	744	16	VAMC	PBH
623BY	TULSA, OK	OK	741	16	CBOC	NPB
623GA	MCALESTER, OK	OK	745	16	CBOC	NPB
626	NASHVILLE, TN	TN	372	9	VAMC	PBH
626A4	MURFREESBORO, TN	TN	371	9	VAMC	PBH
626BY	KNOXVILLE, TN	TN	379	9	CBOC	NPB
626GA	DOVER, TN	TN	370	9	CBOC	NPB
626GC	BOWLING GREEN, KY	KY	421	9	CBOC	NPB
626GD	FT. CAMPBELL CBOC, KY	KY	422	9	CBOC	NPB

Supplementary Table 3
VA Medical Facility Locations, Three-Digit ZIP Codes, and Provider-Based/Non-Provider-Based Designations

Sta #	VA Facility Location	ST	ZIP 3	VN	Type	PB
626GE	CLARKSVILLE, TN	TN	370	9	CBOC	NPB
626GF	CHATTANOOGA, TN	TN	374	9	CBOC	NPB
626GG	TULLAHOMA/ARNOLD AFB, TN	TN	373	9	CBOC	NPB
626GH	COOKEVILLE, TN	TN	385	9	CBOC	NPB
626GI	VINE HILL, TN	TN	372	9	CBOC	PBO
629	NEW ORLEANS, LA	LA	701	16	VAMC	PBH
629BY	BATON ROUGE, LA	LA	708	16	CBOC	NPB
629GA	HOUMA, LA	LA	703	16	CBOC	NPB
630	NEW YORK, NY	NY	100	3	VAMC	PBH
630A4	BROOKLYN, NY	NY	112	3	VAMC	PBH
630A5	SAINT ALBANS, NY	NY	114	3	VAMC	PBH
630B2	NEW YORK SOHO C&P UNIT, NY	NY	100	3	CBOC	PBO
630BZ	NEW YORK METHADONE, NY	NY	100	3	CBOC	PBO
630GA	HARLEM, NY	NY	100	3	CBOC	PBO
630GB	STATEN ISLAND, NY	NY	103	3	CBOC	PBO
630GC	BROOKLYN CHAPEL STREET, NY	NY	112	3	CBOC	PBO
630GD	BROOKLYN BEDFORD-STUYVESA	NY	112	3	CBOC	PBO
631	NORTHAMPTON, MA	MA	010	1	VAMC	PBH
631BY	SPRINGFIELD SOC, MA	MA	011	1	CBOC	PBO
631GA	NORTHAMPTON CBOC, MA	MA	010	1	CBOC	PBO
631GB	SPRINGFIELD CBOC, MA	MA	011	1	CBOC	PBO
631GC	PITTSFIELD, MA	MA	012	1	CBOC	PBO
631GD	GREENFIELD, MA	MA	013	1	CBOC	PBO
632	NORTHPORT/LONG ISLAND, NY	NY	117	3	VAMC	PBH
632GA	PLAINVIEW, NY	NY	118	3	CBOC	PBO
632HA	LYNBROOK, NY	NY	115	3	CBOC	PBO
632HB	RIVERHEAD, NY	NY	119	3	CBOC	NPB
632HC	ISLIP, NY	NY	117	3	CBOC	PBO
632HD	PATCHOGUE, NY	NY	117	3	CBOC	PBO
632HE	MOUNT SINAI, NY	NY	117	3	CBOC	PBO
632HF	LINDENHURST, NY	NY	117	3	CBOC	PBO
635	OKLAHOMA CITY, OK	OK	731	16	VAMC	PBH
635DZ	LAWTON/FORT SILL, OK	OK	735	16	VAMC	PBH
635GA	LAWTON/FORT SILL, OK	OK	735	16	CBOC	NPB
635GB	WICHITA FALLS, TX	TX	763	16	CBOC	NPB
635GC	PONCA CITY, OK	OK	746	16	CBOC	NPB
635GD	KONAWA, OK	OK	748	16	CBOC	NPB
635HB	ARDMORE, OK	OK	734	16	CBOC	NPB
636	OMAHA, NE	NE	681	23	VAMC	PBH
636A4	GRAND ISLAND, NE	NE	688	23	VAMC	PBH
636A5	LINCOLN, NE	NE	685	23	VAMC	PBH
636A6	DES MOINES, IA	IA	503	23	VAMC	PBH
636A7	KNOXVILLE, IA	IA	501	23	VAMC	PBH
636A8	IOWA CITY, IA	IA	522	23	VAMC	PBH
636GA	NORFOLK, NE	NE	687	23	CBOC	NPB
636GB	NORTH PLATTE, NE	NE	691	23	CBOC	NPB
636GC	MASON CITY, IA	IA	504	23	CBOC	NPB
636GF	BETTENDORF, IA	IA	527	23	CBOC	NPB
636GG	QUINCY, IL	IL	623	23	CBOC	NPB
636GH	WATERLOO, IA	IA	507	23	CBOC	NPB
636GI	GALESBURG, IL	IL	614	23	CBOC	NPB
636GJ	DUBUQUE, IA	IA	520	23	CBOC	NPB
636GK	FORT DODGE, IA	IA	505	23	CBOC	NPB

Supplementary Table 3
VA Medical Facility Locations, Three-Digit ZIP Codes,
and Provider-Based/Non-Provider-Based Designations

Sta #	VA Facility Location	ST	ZIP 3	VN	Type	PB
637	ASHEVILLE, NC	NC	288	6	VAMC	PBH
640	PALO ALTO, CA	CA	943	21	VAMC	PBH
640A0	MENLO PARK, CA	CA	940	21	VAMC	PBH
640A4	LIVERMORE, CA	CA	945	21	VAMC	PBH
640BY	SAN JOSE, CA	CA	951	21	CBOC	PBO
640GA	CAPITOLA, CA	CA	950	21	CBOC	PBO
640GB	SONORA, CA	CA	953	21	CBOC	NPB
640HA	STOCKTON, CA	CA	952	21	CBOC	NPB
640HB	MODESTO, CA	CA	953	21	CBOC	NPB
640HC	MONTEREY/FORT ORD, CA	CA	939	21	CBOC	NPB
642	PHILADELPHIA, PA	PA	191	4	VAMC	PBH
642GA	FORT DIX, NJ	NJ	086	4	CBOC	PBO
642GB	CAPE MAY, NJ	NJ	082	4	CBOC	NPB
642GC	WILLOW GROVE, PA	PA	190	4	CBOC	PBO
642GD	GLOUCESTER, NJ	NJ	080	4	CBOC	PBO
644	PHOENIX, AZ	AZ	850	18	VAMC	PBH
644BY	MESA/WILLIAMS AFB, AZ	AZ	852	18	CBOC	PBO
644GA	SUN CITY, AZ	AZ	853	18	CBOC	PBO
644GB	SHOW LOW, AZ	AZ	859	18	CBOC	NPB
644GC	BUCKEYE, AZ	AZ	853	18	CBOC	NPB
644GD	PAYSON, AZ	AZ	855	18	CBOC	NPB
646	PITTSBURGH UNIV DR, PA	PA	152	4	VAMC	PBH
646A4	PITTSBURGH ASPINWALL, PA	PA	152	4	VAMC	PBH
646A5	PITTSBURGH HIGHLAND DR, PA	PA	152	4	VAMC	PBH
646GA	SAINT CLAIRSVILLE, OH	OH	439	4	CBOC	NPB
646GB	GREENSBURG, PA	PA	156	4	CBOC	PBO
646GC	ALIQUIPPA, PA	PA	150	4	CBOC	PBO
646GD	WASHINGTON, PA	PA	153	4	CBOC	PBO
648	PORTLAND, OR	OR	972	20	VAMC	PBH
648A4	VANCOUVER, WA	WA	986	20	VAMC	PBH
648GA	BEND, OR	OR	977	20	CBOC	NPB
648GB	SALEM, OR	OR	973	20	CBOC	NPB
648GC	LONGVIEW, WA	WA	986	20	CBOC	NPB
648GD	NORTH COAST, OR	OR	971	20	CBOC	NPB
649	PRESCOTT, AZ	AZ	863	18	VAMC	PBH
649GA	KINGMAN, AZ	AZ	864	18	CBOC	NPB
649GB	BELLEMONT, AZ	AZ	860	18	CBOC	NPB
649GC	LAKE HAVASU CITY, AZ	AZ	864	18	CBOC	NPB
649GD	BLACK CANYON CITY, AZ	AZ	853	18	CBOC	NPB
649GE	COTTONWOOD, AZ	AZ	863	18	CBOC	PBO
650	PROVIDENCE, RI	RI	029	1	VAMC	PBH
650GA	NEW BEDFORD, MA	MA	027	1	CBOC	PBO
650GB	HYANNIS, MA	MA	026	1	CBOC	NPB
650GC	OAK BLUFFS, MA	MA	025	1	CBOC	NPB
650GD	MIDDLETOWN, RI	RI	028	1	CBOC	PBO
650GE	NANTUCKET, MA	MA	025	1	CBOC	NPB
652	RICHMOND, VA	VA	232	6	VAMC	PBH
652GA	FREDERICKSBURG, VA	VA	224	6	CBOC	NPB
653	ROSEBURG, OR	OR	974	20	VAMC	PBH
653BY	EUGENE, OR	OR	974	20	CBOC	NPB
653GA	BANDON, OR	OR	974	20	CBOC	NPB
653GB	BROOKINGS, OR	OR	974	20	CBOC	NPB
654	RENO, NV	NV	895	21	VAMC	PBH

Supplementary Table 3
VA Medical Facility Locations, Three-Digit ZIP Codes,
and Provider-Based/Non-Provider-Based Designations

Sta #	VA Facility Location	ST	ZIP 3	VN	Type	PB
654GA	AUBURN, CA	CA	956	21	CBOC	NPB
654GB	MINDEN, NV	NV	894	21	CBOC	PBO
655	SAGINAW, MI	MI	486	11	VAMC	PBH
655GA	GAYLORD, MI	MI	497	11	CBOC	NPB
655GB	TRAVERSE CITY, MI	MI	496	11	CBOC	NPB
655GC	OSCODA, MI	MI	487	11	CBOC	NPB
656	SAINT CLOUD, MN	MN	563	23	VAMC	PBH
656GA	BRAINERD, MN	MN	564	23	CBOC	NPB
656GB	MONTEVIDEO, MN	MN	562	23	CBOC	NPB
657	SAINT LOUIS JOHN COCHRAN, MC	MO	631	15	VAMC	PBH
657A0	SAINT LOUIS JEFF BARRACKS, MC	MO	631	15	VAMC	PBH
657A4	POPLAR BLUFF, MO	MO	639	15	VAMC	PBH
657A5	MARION, IL	IL	629	15	VAMC	PBH
657DP	MARION NON-VA HOSPITALS, IL	IL	629	15	CMC	PBH
657DS	ST. LOUIS NON-VA HOSPITAL, IL	IL	631	15	CMC	PBH
657GA	BELLEVILLE, IL	IL	622	15	CBOC	PBO
657GB	SAINT LOUIS CBOC, MO	MO	631	15	CBOC	PBO
657GC	EFFINGHAM, IL	IL	624	15	CBOC	NPB
657GD	SAINT CHARLES, MO	MO	633	15	CBOC	PBO
657GE	SPRINGFIELD, IL	IL	627	15	CBOC	NPB
657GF	WEST PLAINS, MO	MO	657	15	CBOC	NPB
657GG	PARAGOULD, AR	AR	724	15	CBOC	NPB
657GH	CAPE GIRARDEAU, MO	MO	637	15	CBOC	NPB
657GI	FARMINGTON, MO	MO	636	15	CBOC	NPB
657GJ	EVANSVILLE, IN	IN	477	15	CBOC	NPB
657GK	MOUNT VERNON, IL	IL	628	15	CBOC	NPB
657GL	PADUCAH, KY	KY	420	15	CBOC	NPB
657GM	EFFINGHAM, IL	IL	624	15	CBOC	NPB
657GN	SALEM, MO	MO	655	15	CBOC	NPB
658	SALEM, VA	VA	241	6	VAMC	PBH
658GA	TAZEWELL, VA	VA	246	6	CBOC	NPB
658GB	DANVILLE, VA	VA	245	6	CBOC	NPB
658HA	STUARTS DRAFT, VA	VA	244	6	CBOC	NPB
658HB	PULASKI, VA	VA	243	6	CBOC	NPB
658HC	LYNCHBURG, VA	VA	245	6	CBOC	NPB
658HD	HILLSVILLE, VA	VA	243	6	CBOC	NPB
658HE	MARTINSVILLE, VA	VA	241	6	CBOC	NPB
658HG	COVINGTON, VA	VA	244	6	CBOC	NPB
658HH	MARION, VA	VA	243	6	CBOC	NPB
659	SALISBURY, NC	NC	281	6	VAMC	PBH
659BY	WINSTON-SALEM, NC	NC	271	6	CBOC	PBO
659GA	CHARLOTTE, NC	NC	282	6	CBOC	NPB
660	SALT LAKE CITY, UT	UT	841	19	VAMC	PBH
660GA	POCATELLO, ID	ID	832	19	CBOC	NPB
660GB	OGDEN, UT	UT	844	19	CBOC	PBO
660GC	ELY, NV	NV	893	19	CBOC	NPB
660GD	ROOSEVELT, UT	UT	840	19	CBOC	NPB
660GE	OREM, UT	UT	840	19	CBOC	PBO
660GF	GREEN RIVER, WY	WY	829	19	CBOC	NPB
660GG	SAINT GEORGE, UT	UT	847	19	CBOC	NPB
660GI	NEPHI, UT	UT	846	19	CBOC	NPB
662	SAN FRANCISCO, CA	CA	941	21	VAMC	PBH
662BU	SAN FRANCISCO HOMELESS CTR,	CA	941	21	CBOC	PBO

Supplementary Table 3
VA Medical Facility Locations, Three-Digit ZIP Codes, and Provider-Based/Non-Provider-Based Designations

Sta #	VA Facility Location	ST	ZIP 3	VN	Type	PB
662GA	SANTA ROSA, CA	CA	954	21	CBOC	NPB
662GC	EUREKA, CA	CA	955	21	CBOC	NPB
662GD	UKIAH, CA	CA	954	21	CBOC	NPB
663	SEATTLE, WA	WA	981	20	VAMC	PBH
663A4	AMERICAN LAKE/TACOMA, WA	WA	984	20	VAMC	PBH
663GA	LYNNWOOD/NORTHGATE, WA	WA	980	20	CBOC	PBO
663GB	BREMERTON, WA	WA	983	20	CBOC	PBO
664	SAN DIEGO, CA	CA	921	22	VAMC	PBH
664BY	SAN DIEGO CBOC, CA	CA	921	22	CBOC	PBO
664GA	EL CENTRO, CA	CA	922	22	CBOC	NPB
664GB	VISTA, CA	CA	920	22	CBOC	PBO
664GC	CHULA VISTA, CA	CA	919	22	CBOC	PBO
664GD	ESCONDIDO, CA	CA	920	22	CBOC	PBO
666	SHERIDAN, WY	WY	828	19	VAMC	PBH
666GB	CASPER, WY	WY	826	19	CBOC	NPB
666GC	RIVERTON, WY	WY	825	19	CBOC	NPB
666GD	POWELL, WY	WY	824	19	CBOC	NPB
666GE	GILLETTE, WY	WY	827	19	CBOC	NPB
667	SHREVEPORT, LA	LA	711	16	VAMC	PBH
667GA	TEXARKANA, AR	AR	718	16	CBOC	NPB
667GB	MONROE, LA	LA	712	16	CBOC	NPB
667GC	LONGVIEW, TX	TX	756	16	CBOC	NPB
668	SPOKANE, WA	WA	992	20	VAMC	PBH
668HK	SPOKANE MOC, WA	WA	992	20	CBOC	PBO
671	SAN ANTONIO, TX	TX	782	17	VAMC	PBH
671A4	KERRVILLE, TX	TX	780	17	VAMC	PBH
671B0	MCALLEN, TX	TX	785	17	CBOC	NPB
671BY	SAN ANTONIO CBOC, TX	TX	782	17	CBOC	PBO
671BZ	CORPUS CHRISTI, TX	TX	784	17	CBOC	NPB
671GA	BROWNSVILLE, TX	TX	785	17	CBOC	NPB
671GB	VICTORIA, TX	TX	779	17	CBOC	NPB
671GC	DEL RIO, TX	TX	788	17	CBOC	NPB
671GD	EAGLE PASS, TX	TX	788	17	CBOC	NPB
671GE	LAREDO, TX	TX	780	17	CBOC	NPB
671GF	SOUTH BEXAR COUNTY, TX	TX	782	17	CBOC	PBO
671GG	ALICE, TX	TX	783	17	CBOC	NPB
671GH	BEEVILLE, TX	TX	781	17	CBOC	NPB
671GI	KINGSVILLE, TX	TX	783	17	CBOC	NPB
671GJ	UVALDE, TX	TX	788	17	CBOC	NPB
671GK	SAN ANTONIO CBOC, TX	TX	782	17	CBOC	NPB
671GL	NEW BRAUNFELS, TX	TX	781	17	CBOC	NPB
672	SAN JUAN, PR	PR	009	8	VAMC	PBH
672B0	PONCE, PR	PR	007	8	CBOC	NPB
672BZ	MAYAGUEZ, PR	PR	006	8	CBOC	NPB
672GA	SAINT CROIX, VI	VI	008	8	CBOC	NPB
672GB	SAINT THOMAS, VI	VI	008	8	CBOC	NPB
672GC	ARECIBO, PR	PR	006	8	CBOC	NPB
672GD	KINGSHILL, VI	VI	008	8	CBOC	NPB
672GE	GUAYAMA, PR	PR	007	8	CBOC	PBO
673	TAMPA, FL	FL	336	8	VAMC	PBH
673BY	ORLANDO, FL	FL	328	8	CBOC	NPB
673BZ	PORT RICHEY, FL	FL	346	8	CBOC	NPB
673GA	VIERA/MELBOURNE, FL	FL	329	8	CBOC	NPB

Supplementary Table 3
VA Medical Facility Locations, Three-Digit ZIP Codes, and Provider-Based/Non-Provider-Based Designations

Sta #	VA Facility Location	ST	ZIP 3	VN	Type	PB
673GB	LAKELAND, FL	FL	338	8	CBOC	PBO
673GC	BROOKSVILLE, FL	FL	346	8	CBOC	NPB
673GD	SANFORD, FL	FL	327	8	CBOC	NPB
673GE	KISSIMMEE, FL	FL	347	8	CBOC	NPB
673GF	ZEPHYRHILLS, FL	FL	335	8	CBOC	NPB
674	TEMPLE, TX	TX	765	17	VAMC	PBH
674A4	WACO, TX	TX	767	17	VAMC	PBH
674A5	MARLIN, TX	TX	766	17	VAMC	PBH
674BY	AUSTIN, TX	TX	787	17	CBOC	NPB
674GA	PALESTINE, TX	TX	758	17	CBOC	NPB
674GB	BROWNWOOD, TX	TX	768	17	CBOC	NPB
674GC	BRYAN/COLLEGE STATION, TX	TX	778	17	CBOC	NPB
674GD	CEDAR PARK, TX	TX	786	17	CBOC	NPB
674GE	MARLIN, TX	TX	765	17	CBOC	PBO
676	TOMAH, WI	WI	546	12	VAMC	PBH
676GA	WAUSAU, WI	WI	544	12	CBOC	NPB
676GC	LA CROSSE, WI	WI	546	12	CBOC	NPB
676GD	WISCONSIN RAPIDS, WI	WI	544	12	CBOC	NPB
676GE	LOYAL, WI	WI	544	12	CBOC	NPB
676HB	WAUTOMA, WI	WI	549	12	CBOC	NPB
678	TUCSON, AZ	AZ	857	18	VAMC	PBH
678GA	SIERRA VISTA, AZ	AZ	856	18	CBOC	NPB
678GB	YUMA, AZ	AZ	853	18	CBOC	NPB
678GC	CASA GRANDE, AZ	AZ	852	18	CBOC	NPB
678GD	SAFFORD, AZ	AZ	855	18	CBOC	NPB
678GE	GREEN VALLEY, AZ	AZ	856	18	CBOC	PBO
679	TUSCALOOSA, AL	AL	354	7	VAMC	PBH
687	WALLA WALLA, WA	WA	993	20	VAMC	PBH
687GA	RICHLAND, WA	WA	993	20	CBOC	NPB
687GB	LEWISTON, ID	ID	835	20	CBOC	NPB
687HA	YAKIMA, WA	WA	989	20	CBOC	NPB
688	WASHINGTON, DC	DC	204	5	VAMC	PBH
688GA	ALEXANDRIA, VA	VA	223	5	CBOC	PBO
688GB	WASHINGTON SE, DC	DC	200	5	CBOC	PBO
688GC	LANDOVER, MD	MD	207	5	CBOC	PBO
688GD	CHARLOTTE HALL, MD	MD	206	5	CBOC	PBO
689	WEST HAVEN, CT	CT	065	1	VAMC	PBH
689A4	NEWINGTON, CT	CT	061	1	CBOC	PBO
689GA	WATERBURY, CT	CT	067	1	CBOC	PBO
689GB	STAMFORD, CT	CT	069	1	CBOC	PBO
689GC	WINDHAM, CT	CT	062	1	CBOC	NPB
689GD	WINSTED, CT	CT	060	1	CBOC	NPB
689GE	DANBURY, CT	CT	068	1	CBOC	PBO
689HA	WILLIMANTIC, CT	CT	062	1	CBOC	NPB
689HB	NORWICH, CT	CT	063	1	CBOC	NPB
689HC	NEW LONDON, CT	CT	063	1	CBOC	NPB
691	WEST LOS ANGELES, CA	CA	900	22	VAMC	PBH
691A4	SEPULVEDA, CA	CA	913	22	CBOC	PBO
691GA	WEST LOS ANGELES CBOC, CA	CA	900	22	CBOC	PBO
691GB	SANTA BARBARA, CA	CA	931	22	CBOC	NPB
691GC	GARDENA, CA	CA	902	22	CBOC	PBO
691GD	BAKERSFIELD, CA	CA	933	22	CBOC	NPB
691GE	LOS ANGELES CBOC, CA	CA	900	22	CBOC	PBO

Supplementary Table 3
VA Medical Facility Locations, Three-Digit ZIP Codes, and Provider-Based/Non-Provider-Based Designations

Sta #	VA Facility Location	ST	ZIP 3	VN	Type	PB
691GF	EAST LOS ANGELES, CA	CA	900	22	CBOC	PBO
691GG	LANCASTER/ANTELOPE VALLEY,	CA	935	22	CBOC	NPB
691GK	SAN LUIS OBISPO, CA	CA	934	22	CBOC	NPB
691GL	LOMPOC, CA	CA	934	22	CBOC	NPB
691GM	PORT HUENEME/OXNARD, CA	CA	930	22	CBOC	NPB
691GN	LYNWOOD, CA	CA	902	22	CBOC	NPB
691GO	PASADENA, CA	CA	911	22	CBOC	NPB
692	WHITE CITY, OR	OR	975	20	DOM	PBH
692GA	KLAMATH FALLS, OR	OR	976	20	CBOC	NPB
693	WILKES-BARRE, PA	PA	187	4	VAMC	PBH
693B4	ALLENTOWN, PA	PA	181	4	CBOC	NPB
693GA	SAYRE, PA	PA	188	4	CBOC	NPB
693GB	WILLIAMSPORT, PA	PA	177	4	CBOC	NPB
693GC	TOBYHANNA, PA	PA	184	4	CBOC	PBO
693GD	SCRANTON, PA	PA	185	4	CBOC	PBO
693GE	POTTSVILLE/SCHUYLKILL/SHENA	PA	179	4	CBOC	PBO
693GF	BERWICK, PA	PA	186	4	CBOC	PBO
693HK	WILKES-BARRE MOC, PA	PA	187	4	CBOC	PBO
695	MILWAUKEE, WI	WI	532	12	VAMC	PBH
695BY	APPLETON, WI	WI	549	12	CBOC	NPB
695GA	UNION GROVE, WI	WI	531	12	CBOC	PBO
695GC	CLEVELAND, WI	WI	530	12	CBOC	NPB
695GD	GREEN BAY, WI	WI	543	12	CBOC	NPB
695HK	MILWAUKEE MOC, WI	WI	532	12	CBOC	NPB
756	EL PASO, TX	TX	799	18	IOC	PBO
756GA	LAS CRUCES, NM	NM	880	18	CBOC	NPB
757	COLUMBUS, OH	OH	432	10	IOC	PBO
757GA	ZANESVILLE, OH	OH	437	10	CBOC	NPB
757GB	GROVE CITY, OH	OH	431	10	CBOC	PBO

Abbreviations

CBOC = Community-Based Outpatient Clinic
CMC = Civilian Medical Center
DOM = Independent Domiciliary
Fac # = VA Facility Number
IOC = Independent Outpatient Clinic
MOC = Mobile Outreach Clinic
NPB = Non-Provider-Based Outpatient Facility
PB = Provider-Based/Non-Provider-Based Designation
PBH = Provider-Based Hospital
PBO = Provider-Based Outpatient Facility
ST = State
VAMC = VA Medical Center
VN = Veterans Integrated Service Network
ZIP 3 = First three digits of ZIP Code

[FR Doc. 04–27385 Filed 12–14–04; 8:45 am]
BILLING CODE 8320–01–C

Federal Register

Wednesday,
December 15, 2004

Part II

Federal Communications Commission

47 CFR Parts 1, 22, 24, 27, and 90

Facilitating the Provision of Spectrum-Based Services to Rural Areas and Promoting Opportunities for Rural Telephone Companies To Provide Spectrum-Based Services; Final Rule and Proposed Rule

FEDERAL COMMUNICATIONS COMMISSION

47 CFR Parts 1, 22, 24, 27, and 90

[WT Docket Nos. 02–381, 01–14, and 03–202; FCC 04–166]

Facilitating the Provision of Spectrum-Based Services to Rural Areas and Promoting Opportunities for Rural Telephone Companies To Provide Spectrum-Based Services

AGENCY: Federal Communications Commission.

ACTION: Final rule.

SUMMARY: In this document, the Federal Communications Commission (''Commission'') modifies certain regulations and policies to facilitate the deployment of wireless services in rural areas. The Commission establishes the definition for ''rural areas'' in the context of specific policies or regulations governing wireless communications services. The Commission also evaluates its policies governing the licensing of spectrum, both with respect to initial geographic area licensing as well as subsequent re-licensing. The Commission also takes steps to facilitate increased access to capital for rural licensees, such as the elimination of the remaining components of the cellular cross-interest rule, as well as the revision of Commission policies governing security interests in wireless licenses. Further, the Commission takes several actions designed to increase licensee flexibility and permit more cost-effective coverage of rural areas; for example, the Commission increases the permissible power levels for certain wireless services that are located in rural areas, permits certain geographic-area licensees to provide substantial service as a means of complying with their construction requirements, and clarifies its policies governing infrastructure sharing arrangements.

DATES: Effective February 14, 2005, except for § 1.919(c) which contains an information collection requirement under the Paperwork Reduction Act that has not been approved by the Office of Management and Budget (OMB). The Commission will publish a document in the **Federal Register** announcing the effective date of § 1.919(c).

FOR FURTHER INFORMATION CONTACT: Allen A. Barna, Wireless Telecommunications Bureau, at (202) 418–0620.

SUPPLEMENTARY INFORMATION: This is a summary of the Commission's Report and Order portion (*Report and Order*) of the Commission's *Report and Order and Further Notice of Proposed Rulemaking,* FCC 04–166, in WT Docket Nos. 02–381, 01–14, and 03–202, adopted July 8, 2004, and released September 27, 2004. Contemporaneous with this document, the Commission publishes a Further Notice of Proposed Rulemaking (*FNPRM*) (summarized elsewhere in this publication). The full text of this document is available for public inspection during regular business hours at the FCC Reference Information Center, 445 12th St., SW., Room CY-A257, Washington, DC 20554. The complete text may be purchased from the Commission's duplicating contractor: Best Copy & Printing, Inc., 445 12th Street, SW, Room CY-B402, Washington, DC 20554, telephone 800–378–3160, facsimile 202–488–5563, or via e-mail at *fcc@bcpiweb.com.*

Paperwork Reduction Act

The *Report and Order* contains modified information collection requirements subject to the Paperwork Reduction Act of 1995 (PRA), Public Law 104–13. They will be submitted to the Office of Management and Budget (OMB) for review under Section 3507(d) of the PRA. OMB, the general public, and other Federal agencies are invited to comment on the modified information collection requirements contained in this proceeding. Public and agency comments are due on or before February 14, 2005. Comments should address: (a) Whether these modified collections of information are necessary for the proper performance of the functions of the Commission, including whether the information shall have practical utility; (b) the accuracy of the Commission's burden estimates; (c) ways to enhance the quality, utility, and clarity of the information collected; and (d) ways to minimize the burden of the collection of information on the respondents, including the use of automated collection techniques or other forms of information technology. Below, the Commission continues to assess the additional information collection burden that changes to its regulations and policies might have on small entities including businesses with fewer than 25 employees.

Synopsis of the Report and Order

I. Introduction

1. In this *Report and Order,* the Commission adopts several measures intended to increase the ability of wireless service providers to use licensed spectrum resources flexibly and efficiently to offer a variety of services in a cost-effective manner. By our actions today, we take steps to promote access to spectrum and facilitate capital formation for entities seeking to serve rural areas or improve service in rural areas. This *Report and Order* takes action affecting the provision of commercial and private terrestrial wireless services. While the policies and regulations discussed herein are targeted to promote wireless services in rural areas, we note that certain of our actions will likely have broader application to non-rural areas as well. Accordingly, we expect these decisions will facilitate the deployment of new and advanced wireless services, including broadband services, and thereby foster much-needed economic development. The actions we adopt in our *Report and Order* are derived from those proposed in both the Notice of Inquiry (*Rural NOI*), 68 FR 723 (January 7, 2003), and the *Rural NPRM,* 68 FR 64050 (November 12, 2003).

2. In this *Report and Order,* we modify certain regulations and policies in order to facilitate the deployment of wireless services in rural areas. Specifically, we take the following actions. As an initial matter, we examine the various definitions that are used to describe ''rural areas'' and establish the presumption that, on a going-forward basis, and unless otherwise specified in the context of specific policies or regulations governing wireless communications services, counties with a population density of 100 persons per square mile or less constitute ''rural areas'' for purposes of our wireless spectrum policies.

3. Second, we take a close look at some of our policies affecting access to spectrum and the provision of service in rural areas. In particular, we consider our policies governing the licensing of spectrum, both with respect to initial licensing through the competitive bidding process as well as subsequent re-licensing after an authorization is returned to the Commission. We affirm that we will continue to establish licensing areas on a service-by-service (or band-by-band) basis as appropriate, based upon the flexibility that such an approach provides and our past experience in determining the initial size of service areas. We also reaffirm that when developing rules for licensing individual services, we will consider using smaller service areas in some spectrum blocks in order to encourage deployment in rural areas for the service in question.

4. Third, we take steps to facilitate increased access to capital for rural licensees. We eliminate the remaining components of the cellular cross-interest

rule that currently apply only in rural service areas and transition to case-by-case review for cellular transactions, while closely examining those that present a significant likelihood of substantial competitive harm in a market. We also revise our policies governing security interests in wireless licenses and permit licensees, at their option, to grant such interests to the Department of Agriculture's Rural Utilities Service (RUS), subject to the Commission's prior approval of any transfer of control.

5. Fourth, we take several actions to increase licensee flexibility and permit more cost-effective coverage of rural areas. We amend our regulations to increase permissible power levels for base stations in certain wireless services that are located in rural areas or that provide coverage to otherwise unserved areas. By this action, we anticipate that coverage of such areas will be more economical, as licensees may provide increased coverage of rural areas using fewer base stations and less associated infrastructure. We also amend our regulations to permit certain geographic-area licensees to provide substantial service as a means of complying with their construction requirements, thus countering existing disincentives to build out less densely populated areas. Finally, we clarify our policies governing infrastructure sharing and discuss the various types of infrastructure arrangements that parties generally may enter into without the need for Commission review.

II. Background

6. One of the Commission's primary statutory obligations, as well as one of its principal public policy objectives, is to facilitate the widespread deployment of facilities-based communications services to all Americans, including those doing business in, residing in, or visiting rural areas. In December 2002, the Commission released a *Rural NOI* that sought comment on the effectiveness of its existing regulatory tools in promoting service to rural areas and asked how we could modify our policies to further encourage the provision of wireless services in rural areas. In a follow-up *Rural NPRM*, released in October 2003, the Commission sought to build upon the record developed in response to the *Rural NOI* and sought comment regarding a variety of proposals to eliminate unnecessary regulatory barriers and encourage the deployment of spectrum-based services in rural areas. The *Rural NPRM* focused on measures that would increase flexibility, reduce regulatory costs of providing service to rural areas, and promote access to both spectrum and capital resources for entities seeking to provide wireless services in rural areas. Among other issues, the *Rural NPRM* sought comment on the following policies and proposals: (1) Determining an appropriate definition for ''rural area'' for purposes of implementing Commission policies; (2) promoting access to ''unused'' spectrum; (3) extending a ''substantial service'' construction option to all geographic-area licensees; (4) determining whether geographic-area licensees should satisfy additional construction requirements after their initial license term; (5) increasing power limits in rural areas for licensed services; (6) evaluating the appropriate initial size of licensing areas for geographic-area licenses; (7) fostering our partnership with RUS and determining whether additional measures should be taken to complement the RUS loan programs; (8) considering whether to modify long-held restrictive policies on security interests in licenses by permitting licensees to offer RUS security interests in their licenses; (9) considering modification or elimination of the cellular cross-interest rule in Rural Service Areas (RSAs); (10) clarifying our policies with respect to infrastructure sharing; and (11) updating and amending our rules governing the Rural Radiotelephone Service (RRS) and Basic Exchange Telephone Radio Systems (BETRS).

7. As discussed below, the Commission's market-oriented policies largely have been successful in promoting facilities-based competition in the rural marketplace, especially with respect to CMRS. These market-oriented policies, acting in concert with more historical licensing policies, such as the cellular unserved area process, have resulted in the widespread provision of wireless services, including in rural areas. As the Commission noted in a recent report, 95 percent of the total U.S. population live in counties with access to three or more different mobile telephony providers. See Implementation of Section 6002(b) of the Omnibus Budget Reconciliation Act of 1993, Annual Report and Analysis of Competitive Market Conditions with Respect to Commercial Mobile Services, *Eighth Report*, 18 FCC Rcd 14783, 14793–94 paragraph 18 (2003) (*Eighth Competition Report*). Moreover, we are optimistic that recent Commission initiatives will encourage the further deployment of new and advanced wireless services in rural areas, including broadband services. These initiatives complement existing programs and regulations that, in our estimation, already are working to promote wireless service in rural areas. These existing measures include small business bidding credits and partitioning and disaggregation. As the Commission noted in the *Rural NPRM*, available data indicates that wireless service providers have taken advantage of these existing regulatory mechanisms. We also note that there are explicit funding programs available to support the provision of wireless services in rural areas, including Universal Service Fund support for service in high cost areas and RUS funds for the deployment of broadband services.

8. In light of the record developed in response to the *Rural NPRM*, we conclude that our market-oriented policies, in tandem with substantial capital investment by licensees, generally have led to the growth of valuable, productivity-enhancing wireless services to a vast majority of Americans, including many who reside, work, or travel in rural areas. Nevertheless, we also conclude that there are additional steps that we can take in order to promote greater deployment of wireless services in rural areas, such as eliminating disincentives to serve or invest in rural areas, and helping to reduce the costs of market entry, network deployment and continuing operations.

III. Report and Order

A. Definition of ''Rural''

9. *Background.* In the *Rural NPRM*, the Commission requested comment on an appropriate definition of a ''rural area'' for use in conjunction with each of the policies addressed in this proceeding. The Commission sought comment on whether a uniform definition of a ''rural area'' would be appropriate, or whether the definition of a ''rural area'' should differ depending upon the particular regulatory initiative at issue. The Commission discussed various definitions that are currently used by the Commission or by other federal agencies as proxies for ''rural,'' and sought comment on whether one or more of these definitions would be appropriate. Specifically, the Commission sought comment on the following potential definitions: (1) Counties with a population density of 100 persons or fewer per square mile; (2) RSAs; (3) non-nodal counties within an Economic Area (EA) as defined by the Department of Commerce's Bureau of Economic Analysis ; (4) the definition for ''rural'' used by RUS for its broadband loan program; (5) the

definition for ''rural area'' used by the Commission in connection with universal service support for schools, libraries, and rural health care providers; (6) the definition of ''rural'' based on census tracts as outlined by the Economic Research Service of the USDA; (7) the Census Bureau definition of ''rural'' counties; and (8) any census tract that is not within 10 miles of any incorporated or census-designated place containing more than 2,500 people, and is not within a county or county equivalent that has an overall population density of more than 500 persons per square mile of land. To the extent that commenters believed that none of the eight definitions provided in the *Rural NPRM* are appropriate, the Commission asked commenters to identify specific, quantifiable factors that the Commission should consider when determining whether an area is a ''rural area.''

10. *Discussion.* We conclude that it is appropriate to establish a baseline definition of ''rural area'' for purposes of our regulatory policies. Rather than discussing ''rural areas'' in abstract terms, we believe that a baseline definition will provide clarity in situations where the Commission does not otherwise specifically designate an alternative definition. As noted in the *Rural NPRM,* we believe that some clarification of the term is necessary in order to ensure that our policies are appropriately tailored to promote service to consumers in rural areas and ensure uniform understanding of how our regulatory proposals will be implemented and evaluated. In addition, by adopting a baseline definition of ''rural area,'' we can facilitate the evaluation of our rural-oriented policies. By providing continuity with respect to the meaning of a ''rural area,'' we can form a basis for comparison of the effects of our ''rural area'' policies over time.

11. We establish a baseline definition of ''rural area'' as those counties (or equivalent) with a population density of 100 persons per square mile or less, based upon the most recently available Census data. The Commission first used this definition as a proxy definition in its annual CMRS Competition Report for purposes of analyzing the average number of mobile telephony competitors in rural versus non-rural counties. Our decision to adopt this specific definition over other possible definitions is based on several factors. In order to apply a specific definition to Commission policies, it is important that we not make the definition difficult to administer, or so narrowly tailored to only include what many refer to as the most rural areas. We believe this definition achieves an appropriate balance. As noted in the *Rural NPRM,* definitions based on county boundaries are easy to administer and understand, population data based on county boundaries are widely available to the public, and county boundaries rarely change. Moreover, the total population of the counties that fall within this definition of ''rural area'' closely tracks the Census Bureau's overall population for non-urban areas; accordingly, although we do not adopt the same definition for ''rural area'' as the Census Bureau, we believe that we are targeting the same general population. This definition encompasses 2,331 U.S. counties with a total population of approximately 60 million people. These figures, based on the 2000 Census, correspond to approximately 72 percent of all U.S. counties and 21 percent of the total U.S. population.

12. We recognize, however, that the application of a single, comprehensive definition for ''rural area'' may not be appropriate for all purposes. Indeed, the Commission stated in the *Rural NPRM* that there may be potential drawbacks of adopting a definition based solely on county boundaries, and others expressed concern that a single definition will not suit all situations. As noted in the *Rural NPRM*, there are several well-established definitions for ''rural'' utilized by federal agencies, and the Commission itself has employed different proxy definitions of ''rural'' in various proceedings. We realize that definitions of a ''rural area'' previously adopted were tailored to specific policies, and that the 100 persons per square mile or less definition may not be a suitable alternative in all cases. We believe, therefore, that applying a comprehensive definition of ''rural'' to all policies is not warranted and may instead have unintended results. Rather than establish the 100 persons per square mile or less designation as a uniform definition to be applied in all cases, we instead believe that it is more appropriate to treat this definition as a presumption that will apply for current or future Commission wireless radio service rules, policies and analyses for which the term ''rural area'' has not been expressly defined. By doing so, we maintain continuity with respect to existing definitions of ''rural'' that have been tailored to apply to specific policies, while also providing a practical guideline.

B. Facilitating Access to Spectrum

13. Entities seeking to serve rural areas can be prevented from doing so by lack of access to spectrum that has not yet been made available by the Commission or that is held by others in such areas. We do not believe spectrum is overly congested in rural areas, as demand for spectrum in rural areas will in many cases be less than demand in suburban or urban areas. However, we regularly hear from rural carriers that they are unable to gain access to spectrum in rural markets, notwithstanding their interest and the presence of unused spectrum in the market. We therefore review our policies that affect access to spectrum—including initial licensing determinations, subsequent regulatory oversight of the secondary market, and our re-licensing policies—to ensure that our policies facilitate access to spectrum in rural areas.

14. In the following paragraphs, we focus on facilitating opportunities for entities seeking to serve rural areas to acquire spectrum both through initial licensing and through secondary market transactions. We believe that the approach we take in this proceeding will promote service in rural areas, consistent with market-based policies that have encouraged wireless carriers to increase capital spending on equipment and other infrastructure. One of our key objectives is to ensure that carriers that seek to serve rural areas are not prevented from doing so either because they lack of access to adequate spectrum or because those that already have such spectrum lack adequate economic or regulatory incentives to share it. Moreover, we want to do what we can to ensure that spectrum rights flow to those who are willing and able to put the spectrum to use in rural markets. We recognize that this approach is not a panacea. Even where spectrum access is not a barrier to entry, there will be certain rural areas that are very difficult to serve because of high equipment costs, low population density, or other economic factors. Instead of attempting at this time to dramatically manipulate market-based spectrum policies that have yielded tremendous benefits in prices and services for the overwhelming majority of American consumers, we believe the better approach is to gain more experience with secondary markets and to seek additional comment in our *FNPRM* on measures to promote the provision of service in these high-cost and underserved areas by either existing carriers or new entrants.

15. In the sections that follow, we explain how our initial definitions of spectrum licenses, along with our commitment to make substantial amounts of spectrum and licenses available, should facilitate access to

spectrum in rural areas. To facilitate such access, we will determine the size of geographic service areas on a service-by-service basis and create opportunities for small service areas as appropriate. In addition, we will continue our commitment to flexible secondary market policies that facilitate post-auction access to spectrum. We also seek comment in our *FNPRM* on additional steps that we might take to promote spectrum access. Our goal is to ensure that the highest valued use of spectrum is not affected significantly by regulatory methodologies that may artificially constrain the choice of the technology used and services provided.

1. Size of Geographic Service Areas

16. *Background.* For many wireless services, the Commission has adopted geographic-area licensing. In contrast to site-based licensing, geographic-area licensing provides licensees with flexibility to respond to demand within a geographic market without the need for additional licensing or authorization by the Commission. When determining the size of geographic service areas, the Commission, after seeking comment, considers a number of factors including the nature of the service or services to be provided and the likely users. The Commission has designated various sizes of geographic service areas in order to encourage participation in spectrum auctions and to facilitate deployment of wireless services.

17. The Act directs the Commission to design competitive bidding systems to promote ''economic opportunity and competition and ensuring that new and innovative technologies are readily accessible to the American people by avoiding excessive concentration of licenses and by disseminating licenses among a wide variety of applicants, including small businesses, rural telephone companies, and businesses owned by minority groups and women.'' Thus, the determination of geographic area sizes becomes an integral part of a system designed to disseminate licenses for a broad array of uses.

18. In the *Rural NPRM*, the Commission requested comments on the appropriate size of geographic markets in rural areas. The Commission recognized that the initial size of geographic service areas plays an important role in providing the requisite access to spectrum that would stimulate competition and result in greater wireless services in rural areas. The Commission stated that it intends to continue establishing geographic areas on a service-by-service basis, and sought comments on this approach. The Commission also emphasized the importance of selecting appropriate sized geographic service areas for reducing transaction costs that providers may incur if it becomes necessary to aggregate or disaggregate spectrum, or negotiate in secondary markets, in order to meet spectrum needs.

19. *Discussion.* Based on our experience in past proceedings and the record established in this one, we conclude that maintaining the flexibility to establish geographic areas on a service-by-service basis and promoting the use of a variety of service areas, including small areas such as MSAs/RSAs, are in the public interest. By adopting this framework, we seek to promote service in rural areas, encourage the efficient utilization of spectrum, and to make spectrum and licenses available to a wide array of licensees, including rural providers. Furthermore, we believe that this approach provides flexibility, while providing an opportunity for spectrum to be made available over small areas such as MSAs/RSAs depending on the record and other considerations relevant to the specific spectrum, thereby increasing the likelihood of service to rural markets.

20. The approach we adopt today will afford us with the flexibility necessary to tailor the size of licensed areas to balance the needs of the different prospective users of the spectrum together with other factors, including the unique characteristics of that spectrum. We believe that this approach will provide incentives for the provision of advanced applications and service offerings in rural areas.

21. *Service-by-Service Determination in Future Proceedings.* Consistent with our tentative finding in the *Rural NPRM*, we intend to continue a service-by-service approach in defining the initial scope of licenses in the future. We find that this approach is the best method to provide carriers adequate access to spectrum, including spectrum in rural areas, and is consistent with the methodologies used in prior proceedings.

22. A service-by-service approach is consistent with our statutory mandate as well. For services subject to auction, the Commission is required to promote various objectives in designing a system of competitive bidding, including the development and rapid deployment of new technologies, products, and services for the benefit of the public, ''including those residing in rural areas,'' and ''the efficient and intensive use of spectrum.'' The flexibility afforded by a service-by-service approach permits us to balance our various obligations. For example, promoting efficient and intensive use of the spectrum may require the use of large spectrum blocks or service areas to achieve economies of scale, which in turn may conflict with promoting opportunities for small businesses and rural service providers that may require smaller spectrum blocks. Moreover, parties within the same geographic areas may have competing interests. In this regard, the flexibility afforded by a service-by-service approach allows the Commission to consider the extent to which multiple licenses and different sizes of geographic areas should be made available to promote competition within the market. This approach also permits the Commission to consider the use of large service areas if necessary to provide for quicker build-out of facilities and deployment of new and innovative wireless services. In some instances, the adoption of larger areas may be more effective than the use of smaller areas where spectrum use is to be transitioned to new services. In these circumstances, the availability of licenses based on larger service areas may result in a quicker and more successful transition throughout the nation and thus enable the development and deployment of such new services.

23. Another important element of a service-specific methodology is that it takes into account any technical considerations associated with particular spectrum. For example, questions of whether and when new technologies would use the spectrum, and how much spectrum would be required for any such new technologies may be considered in determining the appropriate geographic areas for a particular service. In addition, a service-by-service approach would allow the Commission to determine whether propagation characteristics in a particular band would make it more or less conducive to business models that are built on serving customers over a particular size of service area. This approach would help us to promote investment in and the rapid development of new technologies and services.

24. We also find that a service-specific approach allows us to consider the appropriate size of each future service area in the context of geographic partitioning and spectrum disaggregation rules. Geographic partitioning and spectrum disaggregation are available to promote efficient spectrum use and economic opportunity by a wide range of applicants, including rural telephone companies. A service-by-service approach permits the Commission to

structure service areas in light of potential costs relating to aggregation, partitioning and disaggregation for the particular spectrum. The Commission can consider whether potentially high transaction costs can be avoided by allowing the initial service areas to be sized in order to meet the needs of the service providers that want to use that spectrum.

25. The continued use of service-specific determinations of appropriate geographic area sizes corresponds with the opportunity for parties to take advantage of our secondary markets leasing rules. Even if the market size or sizes that we adopt in a particular proceeding are not necessarily the optimal size to meet the objectives of all potential users, small carriers are still afforded the opportunity to access appropriately sized market areas through spectrum leasing. In the *Secondary Markets Report and Order*, the Commission stated that facilitating the development of secondary markets enhances and complements several of the Commission's major policy initiatives and public interest objectives, including enabling the development of additional and innovative services in rural areas. *See* Promoting Efficient Use of Spectrum Through Elimination of Barriers to the Development of Secondary Markets, WT Docket No. 00–230, *Report and Order and Further Notice of Proposed Rulemaking*, 68 FR 66252 (November 25, 2003) (*Secondary Markets Report and Order*).

26. Based on the record, we find that the continuing development of the benefits associated with the secondary markets policies and rules complements a service-specific approach to determining the appropriate size or sizes of geographic service areas. We also note that a service-specific approach permits the Wireless Telecommunications Bureau (Bureau) to consider whether any particular auction methodology should be employed in light of the decisions that are made regarding the scope of licenses for that spectrum. For example, certain comments address the potential for use of package bidding. In order to maintain maximum flexibility with respect to removing barriers to spectrum, however, no particular form of auction design will be endorsed at this time, including the use of package bidding. Rather, consistent with our statutory obligations and with our actions in the past, the Bureau will seek comment on auction-related procedural issues, including auction design, prior to the start of the auctions for the individual spectrum. This will provide an opportunity to weigh the benefits and disadvantages of any particular bidding design prior to the start of the auction, and will permit the auction procedures to be structured, if necessary, to center on matters that may be of particular concern to the likely participants in the auction and to the spectrum use, including the number of licenses to be auctioned, the number of spectrum blocks, and the size of the geographic service areas.

27. In conclusion, we decline to adopt any particular size of geographic service area for future licensing at this time. Rather, as we state above, we believe that the existence of such a wide range of comments and views make it all the more appropriate for us to consider issues relating to spectrum access and the scope of licenses for particular spectrum in the context of proceedings to establish rules for the use of that spectrum. We believe that this methodology offers the opportunity for parties that would actually want to be involved with the use of that spectrum to target specific issues relating to adoption of the band plan that will help to remove barriers to entry and increase access to the spectrum.

28. *Multiple Licensing; Opportunities for Providers in Small and Rural Areas.* In our service-by-service evaluations, in certain circumstances we have determined that it is appropriate to license different market sizes. For example, for AWS in the 1.7 GHz and 2.1 GHz bands, the Commission licensed the bands using a range of geographic licensing areas in order to maintain maximum flexibility. That band plan spreads licenses over various blocks of spectrum and uses EAs, REAGs, and a block with 734 licenses based on RSAs/MSAs. The Commission noted the competing needs of parties that sought large and small areas, as well as a combination of large and small geographic licensing areas, and found that there was sufficient spectrum to meet the competing need for both large and small areas. The Commission determined that using a varied selection of areas will foster service to rural areas and promote the policy goal of disseminating licenses among a wide variety of applicants. The Commission stated further that these smaller service areas ''provide entry opportunities for smaller carriers, new entrants, and rural telephone companies.'' Assignment of a variety of licenses will also provide flexibility in service offerings, for example, where the use of MSAs and RSAs in conjunction with other sized license areas may allow licensees to focus on consumers that require localized use without the need for roaming service. In future proceedings, where we determine the size of service areas on a service-by-service basis, we will consider licensing the spectrum over a range of various sized geographic areas, including smaller service areas such as MSAs/RSAs, where consistent with the record in that proceeding and with other factors that may be relevant to the spectrum.

2. Re-Licensing vs. Market-Based Mechanisms

29. *Background*. In an effort to increase access to assigned spectrum, the Commission sought comment on when, and under what circumstances, it should apply re-licensing provisions to prospective spectrum designations. The Commission did not propose to change the licensing provisions for current wireless services, but rather chose to evaluate whether it should use re-licensing as a means to increase access to spectrum, and thus service, especially in rural areas and whether, in the event of such re-licensing, there are particular construction standards, such as ''complete forfeiture'' or ''keep what you use'' that are most effective in promoting access and service in rural areas.

30. The Commission explained that one reason it adopted its *Secondary Markets Report and Order* was to enhance economic opportunities and access for the provision of communications services in rural areas. In that proceeding, the Commission took important first steps to facilitate significantly broader access to valuable spectrum resources. These flexible policies extended the Commission's reliance on the marketplace to expand the scope of available wireless services and devices, with the intent of promoting efficient and dynamic use of spectrum resource for the benefit of consumers throughout the country, including those in rural areas. The Commission also sought further comment on various ways in which it could enhance opportunities for spectrum access, efficiency, and innovation by removing unnecessary regulatory barriers and implementing more market-oriented policies that would facilitate moving spectrum to its highest valued uses.

31. Following the policies adopted in the secondary markets proceeding, the Commission sought comment in the *Rural NPRM* on different mechanisms that could potentially be used to reclaim spectrum and increase access by others, including the cellular ''keep what you use'' approach and the PCS ''complete forfeiture'' approach. Currently, the process for reclaiming unused licensed spectrum differs across services. Under the cellular ''keep what you use''

approach, initial licensees must construct facilities five years from license grant and begin providing service within a predefined geographic service area, after which licensees relinquish their spectrum usage rights to all ''unserved areas.'' For the majority of other geographically licensed services, including PCS, licensees are afforded exclusive rights and a renewal expectancy for the entire authorized area once performance requirements are met, regardless of whether service is provided over the entire authorized area. Failure to meet applicable benchmarks results in forfeiture of the entire license, including the rights to operate any facilities already constructed under the authorization.

32. The Commission explained that once spectrum has been reclaimed there are different approaches to re-licensing that spectrum for use by others. Under the cellular ''keep what you use'' approach, the unconstructed portions of a market become available for site-based licensing to other parties via the cellular ''unserved area'' licensing process. In the alternative, the Commission explained that it could create expanded ''overlay'' rights to unused spectrum, whereby usage rights are auctioned to new licensees. Comment was also sought on alternative mechanisms such as government defined easements to promote access to spectrum in rural areas.

33. To assess how these potential re-licensing mechanisms would work in the context of the Commission's market-oriented policies based on flexible use of spectrum and substantial service performance requirements, the Commission inquired generally as to what constitutes use of spectrum by a licensee. In this context, it sought comment on whether and how to provide a clear definition of ''use'' for all parties to support policies for access to ''unused'' spectrum. If a definition of ''use'' was to be adopted, the Commission explained that licensees that construct facilities or lease their spectrum must understand how use is construed in terms of construction requirements, re-licensing, and other policies that may affect them so that they will know what rights they will retain in the event they do not use their spectrum.

34. *Discussion.* We decline to adopt specific re-licensing rules for future spectrum allocations at this time. We believe our recently-adopted secondary market-based mechanisms should be afforded a greater opportunity to provide access to spectrum in a more efficient manner. After considering the record established in this proceeding, we agree generally with those who support additional time for the development of secondary market mechanisms to move ''unused'' spectrum from licensees to other entities that place a higher value on use of the spectrum. Because our secondary markets policies are relatively new and the benefits from their implementation have yet to be fully realized, we decline to adopt re-licensing rules for future spectrum allocations at this time.

35. This approach will allow us to examine alternative approaches while we assess the efficacy of our secondary markets initiatives and underlying policies in rural areas. We believe that the flexibility that results from a simplified set of licensing rules gives licensees freedom to determine the choice of technologies and services the market demands and ultimately leads to more efficient spectrum use. Over the last decade, a large percentage of spectrum has been allocated under policies that emphasize flexible use. As in the past, numerous commenters in this proceeding cite the benefits of applying such policies to spectrum allocations where licensing rules rely on market-based mechanisms. These flexible allocation policies underlie our goal of creating an efficient secondary market that can move spectrum to its highest valued end use. Our steps to facilitate spectrum leasing in the secondary market, along with many other measures to encourage more efficient use of spectrum, should facilitate greater access to spectrum by better ensuring that licensees face significant opportunity costs when deciding either to use spectrum for themselves or to lease it to others.

36. In addition, we will continue to examine various alternatives for creating incentives to increase the number and/or level of wireless providers and services in rural areas. In particular, we recognize that, after the initial license term, it may be appropriate in some instances to revert to re-licensing along the lines of some of the proposals received so that another carrier has an opportunity to provide wireless services to such areas. In addition, we are exploring approaches that may be more transparent and better aligned with market-based mechanisms than proposals whose implementation might constrain the flexible use policies underlying our secondary market-based initiatives. We will continue to consider the potential use of re-licensing standards (*e.g.*, ''keep what you use'') in our *FNPRM*, as well as in the context of future service-specific rulemakings.

37. In the *Rural NPRM*, as part of the Commission's consideration of re-licensing versus market-based mechanisms for increasing licensed access to ''exclusive use'' spectrum, the Commission also sought comment on whether it should consider at this time a more general application of alternative mechanisms for new licensed services, such as government-defined spectrum easements. Given our current efforts to facilitate the development of secondary markets in spectrum usage rights in such spectrum, we believe that we should continue to take steps to facilitate spectrum leasing in secondary markets, and that we should evaluate other access mechanisms in the context of specific service rulemakings. Less than a year has elapsed since our spectrum leasing rules went into effect—a short period of time for an efficient secondary market to develop and for its impact to be seen. As such, any broad evaluation and comparison of secondary markets with the other access mechanisms described in the *Rural NPRM* for new licenses is premature. We note that commenting parties opposed the general imposition of mandatory spectrum easements, many contending that secondary markets have not yet had time to develop. We will, however, continue to evaluate the possible future use of easements in the *FNPRM*.

38. Because we are not adopting any re-licensing policies at this time, we need not define ''use'' of spectrum. As a result, it follows that we also are not establishing any specific usage baselines for individual services above which licensees must reach in order to minimally comply with our substantial service policies. As we explain below, however, we are amending our rules to permit certain geographic-area licensees to provide substantial service as a means of complying with their existing construction requirements, along with appropriate rural ''safe harbors'' to increase certainty and alleviate concerns that the substantial service requirement is overly vague. Accordingly, we disagree with those who support strict reporting guidelines and we will continue to rely on current rules that in many cases permit licensees to determine the showings necessary to report their construction. To the extent that our rules defining protected service areas vary by service, we intend to consider harmonizing these regulations across services in a future rulemaking.

39. As explained above, we generally believe that by maintaining our flexible, relatively undefined use policy for geographic-area licensees as applicable, we can increase efficient access to and use of spectrum under our secondary markets initiatives that will permit

spectrum (and access) to flow to those particular uses that consumers most demand. We note, however, that the definition of ''use'' will be revisited, should we conclude that re-licensing policies should be adopted as a result of our *FNPRM.* We make clear, however, that spectrum in rural areas that is leased by a licensee, and for which the lessee meets the performance requirements that are applicable to the licensee, will be construed as ''used'' for the purposes of performance criteria and construction requirements.

40. This is consistent with the Commission's decision in its *Secondary Markets Report and Order*. We note that merely leasing spectrum, where the lessee does not fully meet the licensee's performance requirements, would not be considered ''use'' under this decision. We find the record to be insufficient to declare a policy of regulatory flexibility for system construction extension requests arising from the failure of an unrelated lessee to live up to its contractual obligation. Further, as we note in our discussion regarding infrastructure sharing arrangements that, to the extent that licensees are sharing spectrum usage rights with third parties under spectrum leasing arrangements, such arrangements will be subject to the policies, rules, and procedures set forth in the *Secondary Markets* proceeding. Thus, to the extent that parties enter into spectrum leasing arrangements pursuant to the *Secondary Markets Report and Order*, the applicable policies, rules, and procedures relating to performance, build-out, and discontinuance of service will apply. Finally, we also find it premature to establish a data base of available ''white space'' in rural areas or increase the use of spectrum ''audits.''

C. Facilitating Access to Capital

41. In order to construct facilities and provide Americans living or traveling in rural areas with important, innovative and advanced services—including such services as broadband, E911, and medical telemetry—wireless licensees must have adequate access to capital resources. We recognize that capital formation issues may be particularly relevant for would-be rural service providers, who may have fewer consumers among whom to spread the costs of providing service. Although we have existing measures to provide funding for deployment in rural areas, such as the Universal Service Fund, we recognize that there are additional steps that we can take to facilitate access to capital. In the following sections, we discuss funding resources available through RUS and outline the ways in which we are working together with RUS to promote rural deployment. We also examine and modify our policies governing security interests in FCC licenses. As discussed below, we believe that relaxing our policies to permit licensees to grant RUS a security interest in FCC licenses, conditioned upon the prior approval of any assignment or transfer of control of the license, will permit licensees to take full advantage of the collateral value of their spectrum rights and reduce the risks of lending. We also examine our cellular cross-interest rule and transition to case-by-case review of cellular cross-interests in RSAs. We believe that these actions will facilitate investment and financing opportunities for licensees seeking to provide service in rural areas.

1. Rural Utilities Service (RUS) Loan Programs

42. RUS, through its Telecommunications Program, assists the private sector in developing, planning, and financing the construction of telecommunications infrastructure in rural America. Programs administered by RUS include: (1) Infrastructure loans; (2) broadband loans and grants; (3) distance learning and telemedicine loans and grants; (4) weather radio grants; (5) local TV loan guarantees; and (6) digital translator grants. For fiscal year 2004, no less than $2.211 billion in loans is available for the Rural Broadband Access Loan and Loan Guarantee Program, with $2.051 billion for direct cost-of-money loans, $80 million for direct 4 percent loans, and $80 million for loan guarantees.

43. In order to encourage greater access and deployment of wireless services throughout rural America, the Commission's WTB has partnered with RUS to sponsor the ''Federal Rural Wireless Outreach Initiative'' (FCC/RUS Outreach Partnership). The FCC/RUS Outreach Partnership was announced on July 2, 2003. The four key goals of the FCC/RUS Outreach Partnership are to: (1) Exchange information about products and services each agency offers to promote the expansion of wireless telecommunications services in rural America; (2) harmonize rules, regulations and processes whenever possible to maximize the benefits for rural America; (3) educate partners and other agencies about Commission, WTB and USDA/RUS offerings; and (4) expand the FCC/WTB and USDA/RUS partnership, to the extent that it is mutually beneficial, to other agencies and partners.

44. The *Rural NPRM* sought comment on what, if any, further regulatory or policy changes should be made to complement RUS's Telecommunications Program, and any other method of securing financing for rural build out and operations. The Commission requested comment on methods to help facilitate access to capital in rural areas in order to increase the ability of wireless telecommunications providers to offer service in rural areas. The Commission noted that an important part of accomplishing this goal is through the promotion of federal government financing programs. The *Rural NPRM* requested comment on how the Commission can assist in making the RUS loan programs more effective. The Commission sought comment on whether there are any Commission regulations or policies that should be reexamined or modified to facilitate participation in the RUS programs by wireless licensees and service providers.

45. *Discussion.* We believe that the FCC/RUS Outreach Partnership continues to be a useful means of encouraging greater access and deployment of wireless services throughout rural America. With respect to RUS loan program rules, we note that certain RUS policies are statutorily mandated. To the extent that we can adopt rules or policies that will facilitate the use of RUS loan programs, however, we will do so. For example, as we set out below, we are modifying our policy with respect to the grant of security interests in FCC licenses, which we believe will enable more prospective borrowers to qualify for RUS loans. We will continue to work with RUS and other federal agencies to research and identify rural community wireless telecommunications needs and strive to create program efficiencies that might assist with exploring options to meet those needs. Further, we will continue to work with RUS to develop rural outreach programs, materials and workshops, which provide technical and economic information on telecommunication technologies and funding options.

2. Conditional Security Interests to RUS

46. *Background.* As we noted in the *Rural NPRM,* the Commission's policies with respect to commercial transactions involving FCC licenses have evolved over time. As the Commission has gained experience in regulating wireless licensees and as the wireless marketplace has developed, the Commission's policies with respect to control and capital formation issues have matured. Particularly in the last decade, the Commission has modified its policies to address evolving licensee

and consumer needs, while concurrently taking appropriate measures to safeguard its regulatory authority vis-à-vis private licensees and to ensure compliance with its statutory responsibilities. Central to the evolution of these market-oriented policies is the Commission's understanding that, in order for wireless licensees to construct facilities and deploy innovative services to all Americans, wireless licensees must have sufficient access to capital.

47. Although the Commission has increasingly embraced market-based transactions, recognizing the marketplace enables licensees to put spectrum to its highest and best uses, this has not always been the case. As a historical matter, the Commission initially was restrictive in its policies towards market-oriented transactions. For example, the Commission prohibited the sale of bare licenses, basing its position on its interpretation of Sections 301 and 304 of the Communications Act. The Commission stated that ''Section 301 and 304 provide, *inter alia,* that licenses issued by the Commission convey no property interest,'' and that ''[t]o allow a permit to be transferred in a situation in which the station seller obtains a profit, prior to the time that programs tests have commenced, would appear to violate this prohibition.'' The Commission subsequently changed its interpretation of these statutory provisions, however, and has approved the for-profit sale of unbuilt licenses and construction permits for terrestrial wireless, broadcasting and satellite services. In the context of the sale of an authorization of an unbuilt cellular telephone facility, the Commission held that ''the plain language of sections 301 and 304 of the Act does not address the sale of authorizations for stations, whether built or unbuilt, for-profit or not for-profit,'' but ''[r]ather * * * congressional concerns that the Federal Government retain ultimate control over radio frequencies, as against any rights, especially property rights, that might be asserted by licensees who are permitted to use the frequencies.'' The Commission went on to conclude that the for-profit sale of ''whatever rights a permittee has in its license'' to a private party, subject to prior Commission approval, would be permissible under these statutory provisions. In 1991, the Commission received a Petition for Declaratory Ruling regarding the grant of security interests in the broadcasting context, and in 1992, the Commission initiated a proceeding in the broadcast context, seeking comment on whether we could improve access to capital by allowing licensees to grant security interests to creditors. In 1994, the Commission found that a ''security interest in the proceeds of the sale of a license does not violate Commission policy.''

48. Over time, the Commission's policies for all spectrum-based services have evolved to expressly permit licensees to grant security interests in the stock of the licensee, in the physical assets used in connection with its licensed spectrum, and in the proceeds from operations associated with the licensed spectrum. Notably, the Commission itself has taken an exclusive security interest in licenses subject to the auction installment payment program and a senior security interest in the proceeds of a sale of an auctioned license. In such circumstances, and subject to the requirements and protections of the security agreements that bind the participants in the installment payment program, the Commission has allowed licensees to provide their lenders a subordinated security interest in the proceeds of a license sale. Furthermore, the Commission continues to develop and evaluate its policies regarding security interests and control of spectrum, in order to ensure that these policies afford licensees sufficient flexibility consistent with the Communications Act to develop and deploy innovative technology and keep pace with ever-changing consumer needs. In a 2000 policy statement, the Commission considered ways in which licensees may be able to maximize their efficient use of spectrum by leveraging ''the value of their retained spectrum usage rights to increase access to capital,'' and indicated its intent to examine Commission policies prohibiting security and reversionary interests in licenses.

49. The Commission noted that it had not yet taken a position on whether its policy towards prohibiting a licensee to give a security interest in the license itself ''is statutorily mandated or solely dictated by regulatory policy.'' In the *Secondary Markets Report and Order,* the Commission found that licensees could enter into certain types of leasing transactions that are not deemed transfers of *de facto* control under section 310(d) of the Act without prior Commission approval, provided licensees continued to exercise effective working control over the spectrum they lease. The Commission indicated that it was updating its policy for interpreting *de facto* control in the context of spectrum leasing, in order ''to reflect more recent evolutionary developments in the Commission's spectrum policies, technological advances, and marketplace trends.''

50. In the *Rural NPRM,* the Commission continued its examination of its security interest policies as a means of facilitating access to capital, consistent with its authority under the Communications Act. Specifically, the Commission sought comment on whether permitting licensees to grant security interests in their licenses to RUS would result in lower costs of and greater access to capital. The Commission noted that it would review and require prior Commission approval of an assignment to RUS, in accordance with the Commission's transfer and assignment policies, *before* RUS could assume control of a license. The Commission also sought comment on whether modifying our policy to permit RUS to take a security interest in FCC licenses is a natural outgrowth of Commission and judicial developments, which recognize the value and ability of a lender obtaining a security interest in the licensee's stock, proceeds and other assets without infringing upon the Commission's statutory obligations. The Commission asked whether a licensee could grant RUS a security interest in an FCC license without compromising the Commission's obligation to maintain control of spectrum in the public interest and completely fulfill its applicable mandates under the Communications Act of 1934, as amended. The Commission sought comment on what the consequences of such a policy shift might be, including what, if any, difference from the perspective of RUS, a third-party lender, or the licensee, there would be on a relaxation of the current security interest policies in the circumstances described above. Finally, the Commission sought comment on a concern that had been raised in the broadcasting context, regarding the independence of broadcast stations and about the ability of creditors to have substantial influence over a borrower station. The Commission asked whether such dangers exist in the connection with RUS's attainment of security interests in non-broadcasting wireless licenses, especially as it relates to preserving and protecting facilities-based competition and innovation by and among wireless service providers.

51. *Discussion.* After careful review of the record, as well as the judicial and regulatory developments of the past decade, we believe that it is appropriate to adjust our policy with respect to the grant of security interests in FCC licenses. We agree with RUS that allowing it to obtain a security interest in an FCC license will greatly improve

loan security and will facilitate our roles in fulfilling the President's goal for the universal deployment of broadband service. We therefore modify our policy and permit commercial and private wireless, terrestrial-based licensees to grant security interests in their FCC licenses to RUS, conditioned upon the Commission's prior approval of any assignment or transfer of *de jure* or *de facto* control. A licensee therefore may grant RUS a security interest in its FCC license, provided that the Commission approves the transaction, pursuant to its authority under section 310(d) of the Communications Act, *before* the secured party can exercise its right to foreclose on the license. We limit this policy change to wireless, terrestrial-based licensees that are within the scope of this proceeding. Further, any security interest granted to RUS must be expressly conditioned, in writing as part of all applicable financing documents, on the Commission's prior approval of any assignment of the license or any transfer of *de jure* or *de facto* control of the license to the secured party or other person or entity. We also note that, in the case of a licensee operating under the installment payment program, the Commission will retain its exclusive, senior secured position with respect to the license. The Commission also will retain its senior secured position with respect to the proceeds of the sale of such license. Accordingly, we clarify that RUS may not obtain a security interest in an FCC license in instances where the FCC itself is a secured creditor, but may obtain a subordinated interest in the proceeds subject to the requirements of the licensee's installment payment obligations (*e.g.*, those set forth in the security agreement between the licensee and the FCC).

52. We believe that relaxing our security interest policy to permit licensees to grant RUS a conditional security interest in their FCC licenses will greatly enhance the value of a licensee's available collateral by facilitating RUS's ability (as a secured party) to keep the licensees' assets together as a package. While we acknowledge that it may be possible for a licensee—primarily through careful corporate structuring—to cobble together a set of interests that it can offer to a lender as security that approximates a security package containing the license, we believe that rural licensees will be much better served if they can approach RUS for financing without having to incur the potentially substantial transactional and other administrative costs that might be necessary to create such a package.

53. Our decision to relax the current restrictions on security interests reflects the Commission's increased reliance on market-oriented policies to facilitate and encourage competition. At the same time, limiting this initiative to RUS, as was proposed in the *Rural NPRM,* avoids any suggestion that the Commission's recognition of a third party property interest in an FCC license itself conveys any type of ownership interest prohibited by the Communications Act. Although this relaxation of our security interest policy marks the first time that the Commission has recognized such an interest, the third party involved (RUS) is a federal governmental agency. Thus, we do not believe that anyone—licensees, their lenders, or the courts—would mistakenly construe our action as a retreat from the principle of the Communications Act that the spectrum itself is a public resource and cannot be ''owned'' or deemed private property. This principle is stated most explicitly in sections 301 and 304 of the Act. Section 301 provides for the control of the United States over ''all the channels of radio transmission'' and for ''the use of such channels, but not the ownership thereof, by persons for limited periods of time, under licenses granted by Federal authority.'' Section 301 also states that ''no such license shall be construed to create any right, beyond the terms, conditions, and periods of the license.'' Section 304 provides that the Commission cannot grant any station license until ''the applicant thereof shall have waived any claim to the use of * * * the electromagnetic spectrum as against the regulatory power of the United States.'' Furthermore, pursuant to section 310(d), the Commission must review and approve license assignments and transfers of control, assess and confirm the basic qualifications of assignees and transferees, and, more generally, determine whether the transaction in question will serve the public interest, convenience and necessity.

54. In view of the limitations of such provisions as sections 301, 304 and 310(d), it is clear that the Communications Act prohibits a licensee from ''owning'' the spectrum it uses, and that the Commission cannot grant, with a license, any such ownership interests. At the same time, however, we recognize that a licensee holds certain ''spectrum usage rights,'' as defined within the terms, conditions, and period of the FCC license at the time of issuance. The Commission has used the security interest prohibition as one bright line to mark off the point at which a licensee's spectrum usage rights end and the government's control of spectrum begins. By permitting RUS—but only RUS—to take a conditional security interest in an FCC license, we maintain the heart of this bright line: *i.e.*, a prohibition on anyone other than the federal government holding a property interest in something as closely associated with spectrum as an FCC license. RUS (like the FCC) is an agency of the United States with a particular mandate from Congress. We believe that permitting it to obtain a security interest in an FCC license will further its mandate and is fully consistent with the view of spectrum as a public resource. Moreover, by conditioning any assignment or transfer of *de facto* or *de jure* control of the license on prior Commission approval pursuant to section 310(d), we ensure that the Commission retains ultimate control over the spectrum. Thus, the FCC's approval must be obtained before RUS can foreclose on a security interest it may hold in an FCC license or before RUS or any other entity may otherwise obtain control of the license or licensee. This prior approval will satisfy our Congressional mandate, while at the same time encouraging capital formation in rural areas.

55. We recognize that one could argue that a grant of a security interest in an FCC license does not convey any ownership of spectrum, but rather ownership of the licensee's private spectrum usage rights associated with the FCC license. However, after carefully considering whether this argument would support extending the relaxation of our security interest policy to non-United States lenders, we have decided to limit our action to RUS, as stated in the *Rural NPRM.* Thus, we will maintain a bright line prohibition against private (non-government) lenders taking a security interest in an FCC license.

56. As an additional matter, we believe that relaxing our policy to permit the grant of conditional security interests in FCC licenses to RUS is unlikely to result in RUS exercising inappropriate influence over the licensee. As noted earlier, licensees may grant security interests in the proceeds of the sale of their licenses, as well as in their assets and stock. We have received no evidence, and we have no reason to suspect, that RUS has used any of these types of transactions, already permitted under our rules and policies, to exercise inappropriate influence over any FCC licensee. In light of these circumstances, we do not believe that permitting a licensee to grant RUS a conditional security interest

in the license itself will increase the likelihood of such inappropriate influence.

57. We note the concerns of some that modifying our policy to permit RUS to obtain a security interest could impede the ability of a wireless provider to obtain financing from other lenders. However, we note that providing licensees with the ability to offer their license as collateral would create an opportunity, not a requirement, and that the wireless provider, as in all loan decisions, will initially determine whether the business risks outweigh the benefits of using its license for collateral. Licensees have the option of obtaining financing through RUS; in the event they find RUS's terms unsuitable, they may elect to work with private lenders. Licensees are not required to provide RUS with a conditional security interest, although this modification of our policy permits them to do so, at their option.

3. Cellular Cross-Interest Rule

58. *Background.* To facilitate additional access to capital by cellular carriers in rural areas, the Commission sought comment regarding whether the prohibition against cellular cross-interests in all RSAs remains in the public interest. As set forth in § 22.942 of the Commission's rules, the prohibition substantially limits the ability of parties to have interests in cellular carriers on different channel blocks in the same rural geographic area. To the extent licensees on different channel blocks have any degree of overlap between their respective cellular geographic service areas (CGSAs) in an RSA, § 22.942 prohibits any entity from having a direct or indirect ownership interest of more than five percent in one such licensee when it has an attributable interest in the other licensee. An attributable interest is defined generally to include an ownership interest of 20 percent or more or any controlling interest. An entity may have a non-controlling and otherwise non-attributable direct or indirect ownership interest of less than 20 percent in licensees for different channel blocks in overlapping CGSAs within an RSA.

59. The Commission consolidated into the instant proceeding two petitions that seek reconsideration of the decision in the December 2001 *Spectrum Cap Sunset Order*, which, on the basis of the state of competition in CMRS markets, sunset the CMRS spectrum cap rule in all markets and eliminated the cellular cross-interest rule in MSAs because cellular carriers in urban areas no longer enjoyed first-mover, competitive advantages. *See* 2000 Biennial Regulatory Review Spectrum Aggregation Limits for Commercial Mobile Radio Services, WT Docket No. 01–14, *Report and Order*, 67 FR 1626 (January 14, 2002) and Final rule; correction, 67 FR 4675 (January 31, 2002) (*Spectrum Cap Sunset Order*). In March 2002, the Commission sought comment on petitions filed by Dobson Communications Corporation, Western Wireless Corporation, and Rural Cellular Corporation (Dobson/Western/RCC) and Cingular Wireless LLC (Cingular) seeking reconsideration of the portion of the *Spectrum Cap Sunset Order* that retained the cellular cross-interest rule in RSAs. *See* Petitions for Reconsideration of Action in Rulemaking Proceeding, 67 FR 13183 (March 21, 2002). While the Commission left the cross-interest rule in place in RSAs, it indicated in the *Spectrum Cap Sunset Order* that it would consider waiver requests and reassess the need for the rule at a future date.

60. In the *Rural NPRM*, the Commission made clear that it sought to balance its efforts to remove unnecessary regulatory barriers to financing and investment of cellular service in rural areas with the need to safeguard competition in RSAs. As an initial matter, it sought comment on a tentative conclusion to retain the current cellular cross-interest rule in RSAs with three or fewer CMRS competitors. Assuming the Commission were to decide to retain a number-based rule, the *Rural NPRM* also sought comment on how to define a ''competitor'' under such a proposal, whether a ''competitor'' might be any CMRS provider with significant geographic overlap with the cellular licensee, and whether a transition period was necessary to sunset the rule for those RSAs with four or more competitors.

61. In the alternative, the Commission sought comment on a range of other options for modifying or eliminating the current rule in a way that promotes investment in rural areas while retaining adequate competitive safeguards. For example, the Commission sought comment on whether to eliminate the prohibition for all RSAs where the ownership interest being obtained is not a controlling interest (*i.e.*, where the interest is a non-controlling interest and where the transaction otherwise would not require prior FCC approval). It sought comment on the extent to which the waiver option has deterred or prevented acquisition of capital in rural markets. Although a specific waiver process has existed to address this barrier to investment in rural areas, the Commission noted that the transactions costs and regulatory uncertainty surrounding any waiver procedure may deter some beneficial investment in these areas. Finally, the Commission sought comment on the option of extending case-by-case review, as established in the *Spectrum Cap Sunset Order*, to promote investment and reduce the possibility of impeding transactions that are actually in the public interest. The Commission recognized the important role that the cellular cross-interest rule has provided in the past against the possibility of significant additional consolidation of cellular providers in rural areas, but it inquired whether the public interest may be better served by the benefits of pure case-by-case review.

62. *Discussion.* Based on our review of certain arguments raised on reconsideration and in the comments regarding the advantages of case-by-case review, as well as developments since the release of the *Spectrum Cap Sunset Order* in 2001, we find that reliance on a uniform case-by-case review process for aggregations of spectrum and cellular cross interests in RSAs is currently the better approach as compared to prophylactic limits. We believe that continued application of the cellular cross-interest rule in RSAs may impede market forces that could drive financing and development of new services in rural and underserved areas. Accordingly, we find that it is in public interest to apply a more flexible approach in reviewing cellular competition in rural areas and, as a result, we will extend our section 310(d) case-by-case review to all cellular markets.

63. We therefore eliminate the cellular cross-interest rule in RSAs and will utilize our case-by-case approach to review transactions where a level of cellular cross interests arises to a substantial transfer or assignment under section 310(d) of the Act. In addition, if a party with a controlling or otherwise attributable interest in one cellular licensee within an RSA obtains a non-controlling interest of more than 10 percent in the other cellular licensee in an overlapping CGSA, we will require the licensee to notify the Commission within 30 days of the date of consummation of the transaction by filing updated ownership information (using an FCC Form 602) reflecting the specific level of investment. This notification requirement will sunset at the earlier of: (1) Five years after the release of this item, or (2) at the cellular licensee's specific renewal deadline. By

employing this approach to maintain scrutiny over those cross interests that pose a particular risk to competition in the near term, we conclude that we have struck the proper balance between promoting investment and protecting consumers against potential competitive harms in rural areas.

64. Although the Commission last determined that the level of CMRS economic competition was not meaningful enough to warrant complete elimination of the cellular cross-interest rule pursuant to section 11 of the Act, it did not fully consider in its *Spectrum Cap Sunset Order* whether a move to case-by-case review for cross interests in RSAs would be in the public interest under the broader scope of its 2000 biennial review of spectrum aggregations limits. To perform meaningful and timely review of spectrum aggregation transactions without the CMRS spectrum cap rule, the Commission explained that it needed time to develop effective guidelines for this process, as well as to ensure that sufficient resources were devoted to the task. In contrast, because the concerns underlying the original purpose of the cross-interest rule had been achieved in MSAs, the Commission was able to immediately eliminate the rule in that context without having to consider to any great extent the rule's necessity as compared to other, less burdensome tools. When the Commission subsequently determined that market conditions in rural areas had not changed sufficiently such that it should eliminate the cellular cross-interest rule in RSAs pursuant to section 11 of the Act, it concluded its reexamination of the rule and did not evaluate whether it would nevertheless be in the public interest to extend the advantages of flexible case-by-case review to aggregation and cross interests of cellular spectrum in rural areas.

65. Notwithstanding section 11 of the Communications Act and the Commission's past findings regarding the level of economic competition in rural markets, we decide on reconsideration of our *Spectrum Cap Sunset Order* and based on the comments filed in response to the *Rural NPRM* that it is in the public interest to eliminate the cellular cross-interest rule. Instead, parties will be permitted to file under our case-by-case review process for substantial cross interests in all cellular spectrum and report to the Commission a certain level of cellular cross interests in rural areas that do not arise to an assignment or transfer of control. Such a change in approach, supported by adequate resources and procedures and facilitated by collection of sufficient industry information along with appropriate enforcement mechanisms, is currently the better approach for evaluating whether proposed cross interests reflect opportunities for increased financing and new services or indicate potential risks of anticompetitive market conditions. The Commission indicated that its 2000 biennial review would consider whether other factors beyond the impact of competition made the cross interest rule appropriate for modification, and in this context, we find they do.

66. Although we recognize the safeguard that the cellular cross-interest rule has provided against the possibility of significant additional consolidation of control over cellular spectrum in rural areas and the attendant serious anticompetitive effects, we find that the public interest is better served by the benefits of case-by-case review with its greater degree of flexibility to reach the appropriate decision in each case, reduced likelihood of prohibiting beneficial transactions or levels of investment both in urban and rural areas, and ability to account for the particular attributes of a transaction or market. The greater regulatory flexibility offered by this change in tools for review outweighs any ''guarantees'' to the competitive nature of cellular competition in rural areas ensured by the current cross-interest rule, as that rule may inadvertently discourage transactions and cross interests that could be found to be in the public interest. We believe that no cross interest or transaction should be presumptively prohibited in RSAs and that we should consider such proposals under an approach that is consistent with the same case-by-case analysis that is employed in all other CMRS contexts.

67. In the *Spectrum Cap Sunset Order,* the Commission gave much consideration to the availability of less burdensome case-by-case review before it decided that the CMRS spectrum cap rule was no longer necessary in the public interest. Given the level of competitive market forces and the benefits of flexible case-by-case review, it determined that it had the means to sunset the CMRS spectrum cap rule in all markets, RSAs as well as MSAs. The Commission decided to retain the cellular cross-interest rule in RSAs based on reasoning that the likelihood of approving a cellular consolidation between two providers in a given market was small and that it would be more efficient and less costly for the Commission to maintain a prophylactic rule and to entertain waiver requests for the small subset of transactions in RSAs where competition was more robust. In review, given advancements in our case-by-case processing procedures and resources since December 2001, we believe that we can repeal the rule to better encourage transactions and levels of financing that are in the public interest while maintaining much of the protection afforded by the cellular cross-interest rule. We recognize that the current waiver approach may interfere with investment in rural areas by discouraging certain financing in the RSA portions of a regional market but not in the MSA portions. Our approach in essence relaxes the permitted threshold to 49.9 percent. However, for the reasons explained here, we disagree with the argument that there is no conceivable situation where the public interest could be served by considering such transactions in RSAs. Our decision here is to change tools for review to a more precise standard, and we make no determination that such proposed transactions are any more likely to be found to be in the public interest.

68. Case-specific review, along with information resources and enforcement mechanisms, is a more targeted process to examine the actual competitive positions involved in a particular transaction or level of cross interests and ensure that acquisitions of and cross interests in spectrum do not have anticompetitive effects that render them contrary to the public interest. As the Commission indicated in the *Spectrum Cap Sunset Order* in the context of the CMRS spectrum cap rule, we can rely on case-by-case review of CMRS spectrum aggregation (including cross interests of cellular spectrum in rural areas) to fulfill our statutory mandates to promote competition, ensure diversity of license holdings, and manage the spectrum resource in the public interest. We have been increasing the resources available to review spectrum aggregation transactions and developing internal procedures for review of concentration of CMRS spectrum in general, and cross interests of cellular spectrum in rural areas in particular. While it at first places greater resource demands on parties and the Commission, over time, these actions will provide parties, including small businesses, with legal precedent and a reasonable degree of certainty and transparency regarding cross interests of cellular spectrum in rural areas and should minimize the administrative costs of case-by-case review for all applicants and licensees, as well as Commission staff. In addition, we believe there may be an inequity that

distorts the market in any area in which more than just the two cellular licensees hold spectrum and find that the better approach to safeguarding competition is to take account of the particular circumstances of each market through case-specific review.

69. To review aggregations or cross interests of cellular spectrum in rural areas, we eliminate § 22.942 of the Commission's rules, 47 CFR 22.942, such that applicants and parties will only be required to obtain prior Commission approval for transactions subject to section 310(d) of the Act. Although we are imposing a reporting requirement to collect ownership information on certain levels of interests that do not trigger section 310(d) review, we have adopted reporting thresholds that reflect a comparatively higher 10 percent level of permitted cross interest by a party with a controlling interest in a given cellular licensee. Under § 22.942, a party with a controlling interest in one of the cellular licensees may only have a 5 percent direct or indirect ownership interest in the other licensee in that CGSA. Under the new reporting standard, we will allow a party with a controlling or otherwise attributable interest in one of the cellular licensees to have a non-controlling or otherwise non-attributable direct or indirect ownership of up to and including 10 percent in the other cellular licensee in overlapping CGSAs without notification. We have not been able to determine conclusively that such cross interests pose a significant threat to competition, and this new 10 percent threshold will afford petitioners and commenters some relief from restrictions on financing in the RSA portions of a regional market. Moreover, it harmonizes the reporting threshold with our FCC Form 602 ownership reporting requirements imposed currently on all licensees.

70. We do not make any determination here on the extent to which cellular carriers may continue to hold a dominant market share in rural areas or whether a consolidation of cellular licenses in RSAs would likely result in a significant reduction in competition. We note, however, that a concentration of interests between the two cellular licensees in rural areas would more likely result in a significant reduction in competition than an aggregation of additional CMRS spectrum by such licensees. In addition, we note that different risks to competition are present depending on whether a proposed cross interest would be held by a telecommunications carrier or by a third-party bank or other source of financing. By reviewing substantial aggregations of cellular cross-interests on a case-by-case basis, as discussed above, we retain the flexibility to evaluate individual transactions on their own merits and account for these different factors in determining whether approval of the transaction will serve the public interest under section 310(d).

D. Increasing Licensee Flexibility

1. Performance Requirements

71. *Background.* Over the past decade, the Commission has shifted away from site-based licensing for wireless licensees and has adopted more flexible, geographic-area based allocations that provide licensees with greater freedom to provide different types of services. In making this shift, the Commission also has adopted performance benchmarks that increase licensees' flexibility to offer a variety of services, including service that may not require ubiquitous geographic coverage. As a general matter, geographic-area licensees are not required to construct their entire geographic area in order to retain their authorizations. Instead, depending upon the specific service, the Commission's rules may require coverage of a certain percentage of the licensed area's population or a certain percentage of the licensed area's geographic area. For many, but not all services, the Commission has adopted a flexible ''substantial service'' construction standard that allows licensees that are providing a beneficial use of the spectrum to retain their authorizations without satisfying a prescribed population-or geographic-based construction requirement. The substantial service standard was intended to provide flexibility for services with a variety of uses for the spectrum (*i.e.*, fixed or mobile, voice or data) or with a high level of incumbency that would prevent a new geographic-based licensee from meeting the coverage requirements. While the definition of ''substantial service'' is generally consistent among wireless services, the factors that the Commission will consider when determining if a licensee has met the standard vary among services. Once a licensee satisfies its construction requirement during its initial license term, the Commission's rules currently do not require that the licensee satisfy additional construction requirements during subsequent renewal terms other than the standards necessary to achieve a renewal expectancy.

72. In the *Rural NPRM,* the Commission proposed modifications to our construction requirements to promote licensee flexibility and the build-out of rural areas. First, the Commission proposed to adopt a ''substantial service'' construction benchmark for all wireless geographic area licensees that are subject to build-out requirements but that did not have the option of meeting those requirements by providing substantial service. Specifically, the Commission proposed to amend its regulations to extend the substantial service construction benchmark to the following licensees: 30 MHz broadband PCS licensees; 800 MHz SMR licensees (blocks A, B, and C); certain 220 MHz licensees; LMS licensees; Multipoint Distribution Service and Instructional Television Fixed Service (MDS/ITFS) licensees; and 700 MHz public safety licensees. The Commission observed that construction benchmarks that mandated population-or geographic-specific coverage might hinder licensees from serving niche or less populated areas, and might unintentionally discourage construction in rural areas. Second, the Commission asked whether we should adopt geographic-based construction requirements for private and commercial terrestrial wireless services that are licensed on a geographic area basis and that do not have a geographic-based requirement. The Commission noted that a geographic benchmark would provide licensees who did not intend to focus construction efforts on population centers with an alternative. Third, the Commission asked whether we should adopt substantial service ''safe harbors'' that are tailored to providing coverage in rural areas, and proposed safe harbors for mobile as well as fixed services. Finally, the Commission also asked whether requiring compliance with additional construction requirements in license terms following initial renewal of the license might be likely to increase build-out in rural areas.

73. *Discussion.* In large part, we adopt the proposal, as set forth in the *Rural NPRM,* to extend the substantial service construction benchmark to all wireless services that are licensed on a geographic area basis. Specifically, we amend our regulations to provide a substantial service construction benchmark for the following licensees: 30 MHz broadband PCS licensees; 800 MHz SMR licensees (blocks A, B, and C); certain 220 MHz licensees; LMS licensees; and 700 MHz public safety licensees. These licensees now have the option of satisfying their construction requirements by providing substantial service or by complying with other service-specific construction benchmarks already available to them

under the Commission's rules. We decline to take any action with respect to the MDS/ITFS and the 71–76 GHz, 81–86 GHz and 92–95 GHz (70/80/90 GHz) bands, because construction rules for these bands recently have been or will be addressed in service-specific proceedings.

74. Based on the record before us, we believe that modifying our rules to permit these additional licensees to satisfy their construction requirements by providing substantial service will increase their flexibility to develop rural-focused business plans and deploy spectrum-based services in more sparsely populated areas without being bound to concrete population or geographic coverage requirements. As the Commission noted in the *Rural NPRM,* particularly in cases where a licensee has a population-based construction requirement, licensees have both an economic and practical incentive to achieve compliance with the Commission's build-out obligation by providing service to urban areas. Further, current population-specific benchmarks may have the unintended consequence of encouraging several licensees within a particular market to provide coverage to the same populous areas. In order to satisfy its construction obligations and safeguard its license, even a late entrant who is the fourth or fifth competitor in a particular area initially may choose to duplicate existing carriers' footprints while other, more sparsely populated areas may be without such competition or even service at all. With the additional flexibility afforded by a substantial service option, however, licensees will be free to develop construction plans that tailor the deployment of services to needs that are otherwise unmet, such as the provision of service to rural or niche markets. While a substantial service alternative, by itself, does not guarantee that all licensees will serve rural areas, the additional flexibility of this alternative undoubtedly improves the likelihood of rural deployment and provides licensees with the opportunity to target unserved rural areas. Moreover, providing these licensees with the option of satisfying their construction requirements by providing substantial service in their licensed areas will increase parity among geographic area licensees. This action promotes more equal regulatory footing with respect to construction obligations.

75. We disagree with those who urge the adoption of a substantial service standard only for those licensees with ''small geographic territories.'' Our intent in providing licensees with a substantial service option is not to mandate, but to encourage and facilitate construction in less populated areas by providing licensees with sufficient flexibility to develop unique business plans that do not require ubiquitous coverage or coverage of densely populated areas. In keeping with our market-oriented policies, we do not propose to require licensees to deploy services where their market studies or other analyses indicate that service would be economically unsustainable. As we stated earlier, the adoption of the substantial service standard provides licensees with the flexibility to provide coverage to other, less populated areas and still satisfy its coverage requirement without necessarily focusing on more urban population centers.

76. We also decline at this time to abandon our substantial service performance benchmark in favor of stricter, more specific build-out obligations, and a 'keep what you use' approach similar to the 'unserved area' licensing regime established for cellular service. As demonstrated by our trend towards licensing services on a geographic-area basis, we believe that licensees can provide a meaningful and socially beneficial service without providing ubiquitous service and that providing licensees with sufficient flexibility to respond to market fluctuations will promote the public interest. However, we recognize that, for example because they can be used sequentially, market-based mechanisms and re-licensing approaches (such as ''keep what you use'') are not necessarily mutually exclusive. Accordingly, our *FNPRM* will continue this discussion of the appropriate re-licensing, and construction obligations for current and future licensees who hold licenses beyond their first term.

77. As an additional matter, we adopt safe harbors for providing substantial service to rural areas. As we state earlier, we adopt a default definition of ''rural area'' as a county with a population density of 100 persons per square mile or less, based upon the most recent Census data. We apply this definition for purposes of these rural-focused substantial service safe harbors. In light of the fact that the geographic area licenses are comprised of counties, we believe it is sensible and administratively efficient to adopt safe harbors for geographic area licenses that also are based upon counties. With respect to mobile wireless services, a licensee will be deemed to have met the substantial service requirement if it provides coverage to at least 75 percent of the geographic area of at least 20 percent of the ''rural areas'' within its licensed area. With respect to fixed wireless services, the substantial service requirement is met if a licensee constructs at least one end of a permanent link in at least 20 percent of the number of ''rural areas'' within its licensed area. Licensees may satisfy these construction requirements through lease agreements, provided these arrangements satisfy the conditions set forth in the *Secondary Markets Report and Order.* As we stated in the *Rural NPRM,* the use of a population density of 100 persons or fewer per square mile is derived from our finding in the *Eighth Competition Report,* which indicates that counties with population densities of 100 persons per square mile or less ''have an average of 3.3 mobile competitors, while the more densely populated counties have an average of 5.6 competitors.'' We believe that this population density-based definition provides a workable and reasonable point of differentiation between rural and non-rural areas, as we noted earlier.

78. We believe it is beneficial to adopt these safe harbors because they provide licensees with concrete examples of how they can provide substantial service through specific types of deployment in rural areas, thereby increasing certainty and alleviating concerns that the substantial service requirement is overly vague. We emphasize, however, that these safe harbors do not constitute the only means by which a licensee may provide substantial service. A licensee is therefore free to meet the substantial service test by satisfying one of the safe harbors or providing some alternative coverage to its licensed area, depending upon the individual needs of their consumers or their own unique business plans. We also note that the *Rural NPRM* provided licensees with additional guidance by setting forth a list of factors that we will consider in the context of determining whether a licensee is providing substantial service to rural areas. We affirm that we will consider these factors in evaluating substantial service showings. Specifically, we will look at the following factors: (1) Coverage of counties or geographic areas where population density is less than or equal to 100 persons per square mile; (2) significant geographic coverage; (3) coverage of unique or isolated communities or business parks; and (4) expanding the provision of E911 services into areas that have limited or no access to such services. While this list is not intended to be exhaustive or exclusive, we believe it illustrates the sorts of material factors we will consider in any rural substantial service analysis.

By adopting substantial service ''safe harbors,'' as well as by providing examples of the sorts of factors we will consider in evaluating substantial service showings, we believe we satisfactorily balance the competing interests of maximizing licensee flexibility while providing some measure of certainty.

79. We decline at this time to introduce a ''very rural area'' safe harbor or modify our safe harbors to include a population component. As we stated above, the safe harbors are not intended to be the only means of providing substantial service. We will take into consideration if a licensee is serving a ''very rural area'' or a very large geographic area.

80. We also decline to adopt a geographic-based benchmark for all wireless geographic area services that are subject to construction requirements but that otherwise do not have a geographic-specific construction requirement. We believe that licensees who wish to provide coverage to a particular geographic portion of their licensed area have the flexibility to do so pursuant to the ''substantial service'' standard. We conclude, based upon the record in this proceeding, that there is no demonstrated need to modify our regulations in this regard.

81. We also decline to adopt performance requirements for renewed licenses at this time. While we recognize the concerns of existing licensees regarding future construction requirements, we believe that re-licensing approaches such as ''keep what you use'' and market-based mechanisms are not necessarily mutually exclusive. While we do not make any such changes at this time, we initiate a *FNPRM* to continue our discussion of various re-licensing approaches and the merits, if any, of construction requirements for current and future licensees holding licensees beyond their first term.

82. We note that although we refrain from adopting renewal term performance requirements at this time, we will continue to examine the state of competition in rural areas and will revisit this decision in the event we observe that licensees cease deploying new services in rural areas and/or that secondary markets are not facilitating sufficient access to spectrum for would-be service rural service providers. We emphasize that, contrary to the assertions of some, the Commission retains the right to modify the terms and conditions of FCC licenses. The Commission's licensing system has never provided any vested right to specific license terms. Rather, it is well established that the Commission always retains the power to alter the terms of existing licenses by rule making. Further, at the time Congress introduced auctions into the licensing process, it made clear that this mechanism for assigning licenses was not intended to change the Commission's basic regulatory role or otherwise provide additional rights to auction-winning licensees. Thus, no auction bidder could have assumed that it was buying a license containing terms that the Commission could not modify.

2. Increasing Power Limits for Certain Services

83. *Background.* In the *Rural NPRM*, the Commission observed that ''[i]ncreasing the range of radio systems is one means of making it more economical to provide spectrum-based radio services in rural areas by potentially lowering infrastructure costs,'' and that ''[o]ne way to increase the range of radio systems is by increasing power levels.'' The Commission accordingly sought comment regarding whether we should modify our regulations governing power limits for operations in rural areas, as a means of encouraging service to these areas. Specifically, the Commission asked whether current power limits should be increased for stations located in rural areas and licensed under parts 22, 24, 27, 80, 87, 90, and 101 of our rules. The Commission also sought comment regarding the implementation of higher power limits, such as how to define ''rural area'' for purposes of increased power limits and whether, in the case of base/mobile systems, both the base and mobile stations must be located within a rural area. The Commission further acknowledged that there may be certain challenges in implementing increased power levels in rural areas and sought comment on how increased power might increase the potential for harmful interference to neighboring systems or otherwise limit the number of paths in a given area.

84. *Discussion.* Based on the record in this proceeding, we believe that, in principle, increasing power limits in rural areas can benefit consumers in rural areas by reducing the costs of infrastructure and otherwise making the provision of spectrum-based services to rural areas more economic. When we balance this potential benefit, however, against the potential costs of harmful interference, we recognize that we must act carefully to ensure that increased power limits do not cause harmful interference for other licensees. After reviewing the record and evaluating the technical and operational rules for the various services at issue in this proceeding, we conclude that increasing cellular, PCS, and AWS power limits may provide measurable benefits without creating harmful interference for co-channel or adjacent licensees. As we discuss in the following paragraphs, we find that the current cellular, PCS, and AWS technical and coordination rules (with some modifications) will be sufficient to ensure that licensees are able to utilize increased power levels at certain base stations without causing harmful interference.

85. *Cellular.* We amend our regulations governing the Cellular Radiotelephone Service and authorize increased power limits for cellular base stations that either: (1) Are located in counties with population densities of 100 persons or fewer per square mile, based upon the most recently available population statistics from the Bureau of the Census; or (2) extend coverage into cellular unserved areas, as those areas are defined in § 22.949 of the Commission's rules. Specifically, we amend § 22.913(a) of our rules to provide that the Effective Radiated Power (ERP) of such base transmitters must not exceed 1000 Watts. This power increase doubles permissible ERP for selected cellular base stations; prior to this amendment, § 22.913(a) provided that the ERP of base transmitters and cellular repeaters must not exceed 500 Watts. We recognize that a ''one size fits all'' approach to spectrum management is unlikely to yield optimal spectral efficiency and that, particularly in areas where there is less congestion or where other unique factors are present, it is appropriate to amend our operating parameters to afford licensees greater flexibility. As the Spectrum Policy Task Force noted, ''spectrum policy must evolve towards more flexible and market-oriented regulatory models,'' in order ''[t]o increase opportunities for technologically innovative and economically efficient spectrum use.'' Our action today is consistent with the recommendations of the Spectrum Policy Task Force, which advised that the Commission explore ways of promoting spectrum access and flexibility in rural areas, and stated that the Commission's interference and other technical rules should ''afford spectrum users the flexibility to operate at higher power in less congested areas, which are typically rural, so long as such higher power operations do not cause interference and do not receive additional interference protection.''

86. We believe that this amendment of our regulations governing cellular power limits will promote coverage to rural areas by making it more

economical to provide service to these areas. As a result of this power increase, cellular licensees may be able to extend their coverage area and use fewer base stations, thereby lowering their infrastructure costs. Relaxed limits for licensed operations will provide much-needed relief to rural operators by substantially reducing the costs associated with construction of such systems.'' We estimate that increasing authorized base station power limits to 1,000 Watts ERP may increase the distance to the licensee's Service Area Boundary (SAB) by as much as 12.5 percent and may increase overall coverage area by as much as 26.6 percent. Consequently, we estimate that, as a result of this power increase, licensees may require up to 21 percent fewer cell sites to provide the same coverage with 1,000 Watts ERP as previously provided with 500 Watts ERP.

87. We limit this power increase to cellular base stations that are located in rural areas or that are providing coverage to unserved areas. We define ''rural areas'' for purposes of increased power limits as counties with a population density of 100 persons per square mile or less. Specifically, permitting power increases in areas where the population density is 100 persons or less captures much of the geographic area where service is not provided by both the A- and B-block cellular carriers (or, in some instances, by either cellular carrier). After conducting an analysis of current cellular licenses in the United States, we have determined that there are 625 counties that have some area that is not covered by the license of an A-block and/or B-block cellular provider. Of these 625 counties, 577 of these counties have a population density of 100 persons per square mile or less. As an additional matter, in order to promote cellular coverage to areas that lack cellular service but otherwise are not captured by this definition of ''rural area,'' we amend our rules to permit carriers to use higher power at base stations located in counties with a greater population density, provided those base stations are providing coverage to unserved areas, as defined by our rules. We also limit this power increase to cellular base stations more than 72 kilometers (45 miles) from the Mexican and Canadian borders, consistent with our current agreements with those countries.

88. We note that some expressed concern that higher power limits might result in harmful interference to other licensees. We have carefully considered the concerns raised by commenters and believe that this limited amendment of our cellular rules will increase licensee flexibility without increasing the likelihood of harmful interference. Our regulations governing the provision of cellular service already contain specific safeguards that are designed to minimize the likelihood of harmful interference by clearly defining protected service areas for each cell site, and requiring licensee coordination near system boundaries. We find that applying these same requirements to higher power base stations will minimize the potential for harmful interference. Specifically, the Service Area Boundary (SAB) of each cellular base station is defined by a formula based on antenna height and transmitter power, and the formula's underlying assumptions are still valid for power levels up to 1000 Watts. Using the existing formula, the SAB distance for a particular base station will increase as the power level increases. However, because the rules prevent a base station SAB from overlapping other licensees' CGSAs, such power increases will only be permitted so long as they do not infringe upon other licensees' systems.

89. As an additional safeguard, the Commission's rules currently provide that licensees must coordinate channel usage at each transmitter location within 75 miles of any transmitter locations authorized to other licensees or proposed by tentative selectees or other applicants. This requirement recognizes that the SAB/CGSA overlap restriction described above permits licensees to provide service quality signal levels up to the edge of another licensee's system boundary. While this approach facilitates seamless coverage for consumers, it requires careful coordination among neighboring licensees in order to avoid interference. For years licensees have been coordinating system frequency plans with one another in order to ensure high levels of service quality and seamless roaming along system boundaries. Going forward, we believe this coordination requirement will perform equally well in coordinating high power operations.

90. Our decision here to authorize higher power levels for cellular licensees, subject to certain safeguards to protect other cellular services does not diminish in any way the obligations we impose today on cellular licensees in the *800 MHz Order* to protect public safety and other non-cellular operations in the adjacent 800 MHz band from interference. *See* Improving Public Safety Communications in the 800 MHz Band Consolidating the 900 MHz Industrial/Land Transportation and Business Pool Channels, WT Docket No. 02–55, Report and Order, Fifth Report and Order, Fourth Memorandum Opinion and Order, and Order, FCC 04–168 (rel. August 6, 2004) (*800 MHz Order*) published at 69 FR 67823 (November 22, 2004). As explained in detail in the *800 MHz Order,* we adopt a specific standard defining ''unacceptable interference'' to such operations in that band and require other licensees, including cellular licensees, to immediately take all steps necessary, including the implementation of Enhanced Best Practices, to abate such interference. Cellular licensees wishing to utilize the increased power levels authorized in this Order can do so only to the extent that they also remain in compliance with their *800 MHz Order* obligations.

91. Some have stated that increased power limits would not necessarily facilitate increased coverage due to handset limitations or other technical constraints. Although increasing the power of the handset might address this issue by increasing the mobile unit's ability to ''talk'' to the base station, we note that increasing such power could be problematic, in light of the fact that a handset is likely to be used in urban as well as rural areas and might introduce interference concerns if used in an urban setting. Accordingly, we find that there is no need to increase handset power limits at this time. We do not believe that increasing handset power is necessary, however, in order for cellular licensees to benefit from increased power limits. First, nearly all cellular phones on the market today operate at power levels well under the maximum permitted under our rules, which suggests that our regulations already permit sufficient handset power. Today's handsets generally utilize low power in order to comply with our RF safety rules and to extend battery life. Second, cellular licensees may overcome handset constraints by employing an external means of boosting the handset's signal, or by adding amplifiers at the base station to boost the received signal. For example, a cellular carrier may use an external amplifier or otherwise use a tower top amplifier at the base station. In any case, cellular technology continues to develop and we expect that technical limitations may diminish over time as technology evolves. Further, our action affords licensees with additional flexibility to take advantage of new technological advancements without being unduly constrained by Commission requirements.

92. In addition, we note that some wireless carriers are considering the use of directional antennas to improve

network performance, and that such antennas have the potential to help improve communications in rural areas by achieving higher gain, mitigating the effects of multipath, improving frequency bandwidth performance, and providing better directional control over emissions. As such, directional handset antennas would provide improved reception quality at the cellular tower receiver, significant improvement of voice quality near the edge of a cell, potentially larger cell sites with fewer base stations, and lower power consumption in handsets, improving battery life. Although handsets that employ directional antennas may need to be slightly reoriented when used in certain locations, techniques such as antenna diversity are being considered to combat large-scale fading effects caused by shadowing from large obstacles (*e.g.*, buildings or other terrain features). Because directional handset antennas have the potential to significantly increase the strength of signals transmitted from handsets, as well as provide efficiency benefits both to the wireless network and to battery life, there are several benefits that could be gained from their increased use in handsets. Importantly, directional handset antennas, coupled with an increase in base stations' transmitted power, have the potential to significantly improve wireless communications in many rural areas.

93. *Broadband PCS.* Similar to our treatment of cellular above, we will provide for increased power limits for broadband PCS. Specifically, we increase power levels by 100 percent for broadband PCS base stations located in rural areas, in parity with the cellular power levels adopted in this proceeding. We note that broadband PCS power levels are tied to antenna heights, so that the authorized power for a given broadband PCS base station would vary, depending upon the accompanying antenna height. For example, a base station with an antenna with a height above average terrain (HAAT) of 300 meters or less may operate at a maximum of 1640 watts peak equivalent isotropically radiated power (EIRP). Thus, for base stations of 300 meters or less in rural areas, we will allow an increase from 1640 to 3280 watts EIRP.

94. As with the modification of our cellular regulations, we believe that this modification of our PCS regulations will allow licensees to increase their coverage while using fewer base stations, thereby reducing the costs of providing service to rural areas. We estimate that permitting broadband PCS licensees to increase their power by 100 percent will increase the distance from the base station to the edge of their coverage area by 17 percent and will increase the overall coverage area by 36 percent. As a result, we estimate that a broadband PCS licensee using increased power will require 27 percent fewer sites in order to provide the same coverage provided using current power limits.

95. We find that the current market-boundary signal strength limit, in conjunction with a coordination requirement, will minimize the potential for harmful interference among licensees. Currently, broadband PCS licensees cannot exceed a signal strength of 47 dBμV/m at their geographic market-boundary unless neighboring licensees agree to a higher level. This means that, regardless of the location, height, or power level of broadband PCS base stations, the signal level at the market-boundary may not exceed this maximum level without mutual agreement. Therefore, we find that permitting a 100 percent increase in power levels at broadband PCS base stations will not increase the potential for harmful interference beyond what exists today. At the same time, we note that the 47 dBμV/m limit is a ''service quality'' signal level that promotes coverage up to the edge of the market boundary, and seamless roaming across market boundaries in certain instances. In other words, although there is no formal coordination requirement, neighboring licensees must as a practical matter coordinate frequency plans and site locations along market boundaries in order to avoid interference. As a cautionary measure, we will require that licensees using higher power levels coordinate operations with all licensees within 75 miles of the relevant base station. This requirement will supplement the existing signal strength limit and underscore our intention that licensees must coordinate spectrum usage along common boundaries. We note that this power increase applies only to broadband PCS base stations, and not to mobile units. For the reasons stated above for the 800 MHz cellular service, we find that there is not reason to increase mobile power levels at this time.

96. We also note that the Commission is taking steps to address interference concerns more generally and that these additional measures might protect other licensees from harmful interference. We are optimistic that these initiatives might effectively address interference concerns in a flexible manner and alleviate the need to impose detailed, service-specific coordination requirements.

97. Finally, as we did with 800 MHz cellular, we limit this power increase to broadband PCS base stations located in counties with population densities of less than 100 persons per square mile and those located more than 75 miles from the Mexican and Canadian borders. As stated above, we find that a majority of areas likely to be unserved or underserved are located in such counties. Further, because our existing agreements with Mexico and Canada are based on the prior maximum power limits, we retain those limits for border areas.

98. *AWS.* In 2003, the Commission adopted the PCS power limit of 1640 watt EIRP for AWS base stations. *See* Service Rules for Advanced Wireless Services in the 1.7 GHz and 2.1 GHz Bands, WT Docket No. 02–353, Report and Order, 69 FR 5711 (February 6, 2004) (*AWS Report and Order*). The Commission noted, however, that the *Rural NPRM* had proposed an increase in the power limit for PCS operations in rural areas and indicated that, in the event we adopted higher power limits for PCS services, we would ''explore the possibility of similar power increases for AWS.'' Thus, similar to our treatment of cellular and broadband PCS above, we will provide for increased power limits for AWS. Specifically, we increase power levels for AWS base stations located in rural areas by 100 percent, or up to 3280 watts EIRP in parity with the cellular and broadband PCS power levels adopted in this proceeding.

99. As with the modification of our cellular and broadband PCS regulations, we believe that this modification of our AWS regulations will allow licensees to increase their coverage while using fewer base stations, thereby reducing the costs of providing service to rural areas. We estimate that increasing authorized base station power limits to 3280 Watts EIRP may increase the distance to the licensee's edge of coverage by as much as 17 percent and may increase overall coverage area by as much as 36 percent. Consequently, we estimate that, as a result of this power increase, licensees may require up to 27 percent fewer cell sites to provide the same coverage with 3,280 Watts EIRP as previously provided with 1640 Watts EIRP. We estimate that permitting AWS licensees to increase their power by 100 percent will increase the distance from the base station to the edge of their coverage area in an amount similar to broadband PCS, thereby requiring fewer sites in order to provide the same

coverage provided using current power limits.

100. As with broadband PCS, we find that the current market-boundary signal strength limit, in conjunction with a coordination requirement, will minimize the potential for harmful interference among AWS licensees, and licensees in neighboring bands. Therefore, as a cautionary measure, we will require that licensees using higher power levels coordinate operations with all affected licensees within 75 miles of the relevant base station and with certain satellite entities. As with broadband PCS, this requirement will supplement the existing signal strength limit and underscore our intention that licensees must coordinate spectrum usage along common boundaries. At present, AWS licensees already must coordinate with nearby, incumbent co-channel and adjacent channel Part 101 and MDS licensees. Due to concern about the possibility of both out-of-band emission (OOBE) and receiver overload interference from AWS base stations to BAS and CARS operations, the Commission also has decided that AWS licensees must coordinate their operations with affected BAS and CARS licensees. In addition to these existing coordination requirements, higher power AWS operations must also be coordinated with adjacent channel AWS licensees, Part 21 MDS licensees operating above 2155 MHz, as well as all Government and non-Government satellite entities operating in the 2025–2110 MHz band.

101. We note that this power increase applies only to AWS base stations, and not to mobile units. For the reasons stated above for the 800 MHz cellular service, we find that there is not reason to increase mobile power levels at this time. Finally, as we did with broadband PCS, we limit this power increase to AWS base stations located in counties with population densities of less than 100 persons per square mile. As stated above, we find that a majority of areas likely to be unserved or underserved are located in such counties.

102. *Other Radio Services.* At this time we will not adopt increased power levels in other radio services. We also decline to modify power levels for: (1) 2.3 GHz WCS facilities; or (2) licensed terrestrial services that operate in frequency bands that are shared by satellite services.

103. We also decline the request of one commenter that the Commission adopt higher power limits and increased operating parameters for the Multichannel Video Distribution and Data Service (MVDDS). First, the Commission expressly excluded MVDDS stations licensed under Part 101 from the scope of its power limits inquiry, noting that the Commission recently increased power levels for all MVDDS stations in a separate proceeding. Second, that commenter's request constitutes a late-filed petition for reconsideration of this prior Commission action. Furthermore, we decline to take any action with respect to unlicensed services in this proceeding. We will incorporate comments addressing power limits for unlicensed services into the record of the Cognitive Radio NPRM and will respond to these comments in the context of that proceeding.

104. In conclusion, we decline to adopt increased power limits for any of the other radio services for which we sought comment in the *Rural NPRM,* due to lack of support in the record. We note, however, that licensees in these services may file a request for waiver of these power limits. We will entertain waiver requests on a case-by-case basis. Any such waiver request should demonstrate how a waiver of our power limits will promote the public interest. In addition, licensees seeking to obtain a waiver of our power limits must adequately address any potential interference concerns that may arise as a result of such increased power.

3. Infrastructure Sharing

105. *Background.* The *Rural NPRM* sought comment on whether clarifying the Commission's policy on infrastructure sharing may promote service in rural markets. The Commission also stated that certain carriers in the United States have entered into sharing arrangements, and sought comment on the extent to which infrastructure sharing would promote service in rural areas and on the costs and benefits associated with such arrangements in the context of competition. Infrastructure sharing offers the potential for wireless service providers to share facilities and other infrastructure in order to provide spectrum-based services on a more cost-effective basis, including service to rural areas. A key objective underlying such arrangements is the possible reduction in costs of capital construction in rural areas, and the creation of opportunities for enhanced and expanded coverage. A number of infrastructure sharing arrangements have been entered into in the United States, and some of the parties to such transactions have claimed that these lead to lower costs associated with expanded geographic coverage. Generally, because there are fewer providers in rural areas than in more populated areas, infrastructure sharing may permit more providers to operate in rural areas and thus encourage more competitors to enter those markets.

106. As noted in the *Rural NPRM,* infrastructure sharing includes sharing of infrastructure-related equipment, including antennas, towers, and network elements such as switches and nodes. Commission rules and policies, including our environmental rules, have enabled the sharing of towers and other antenna support structures for the provision of spectrum based services by multiple service providers. Moreover, the Commission has both facilitated and encouraged the collocation of antennas on existing towers. Existing operators have taken advantage of these policies to enter into tower sharing arrangements. Indeed, some companies have made a business of constructing and maintaining towers on which multiple licensees can locate their transmitters and receivers.

107. In addition to these infrastructure sharing arrangements, parties may also be able to expand or improve service to rural areas through spectrum leasing arrangements—whereby licensees in effect share the use of their licensed spectrum with spectrum lessees—under the policies, rules, and procedures established in the *Secondary Markets* proceeding. In the *Secondary Markets Report and Order,* the Commission established policies and rules to enable spectrum users in most wireless radio services to gain access to licensed spectrum by entering into different types of spectrum leasing arrangements with licensees, and streamlined its approval procedures for license assignments and transfers of control. Also, in the *Secondary Markets Second Report and Order,* we clarified that spectrum leasing parties may enter into a variety of dynamic leasing arrangements in which licensees and spectrum lessees share the use of the same licensed spectrum.

108. Depending on their structure, infrastructure sharing arrangements may raise transfer of control considerations under section 310(d) of the Communications Act, as amended. Under that statute, prior Commission approval is required to transfer control of or assign licenses (or parts of licenses, where permitted) to third parties. For many licensees in the wireless radio services, the Commission has interpreted section 310(d) *de facto* control requirements pursuant to its *Intermountain Microwave* decision, which focuses on whether the licensee, as opposed to an unlicensed third party, exercises close working control over different aspects of the operation of the

station facilities that use the spectrum. *See* Nonbroadcast and General Action Report No. 1142, (*Intermountain Microwave Public Notice),* 12 FCC 2d 559 (February 6, 1963). Specifically, the Commission applied six factors for determining who has *de facto* control by examining whether a licensee: (1) Has unfettered use of all station facilities and equipment; (2) controls daily operations; (3) determines and carries out the policy decisions (including preparation and filing of applications with the Commission); (4) is in charge of employment, supervision and dismissal of personnel operating the facilities; (5) is in charge of the payment of financial obligations, including expenses arising out of operations; and (6) receives the monies and profits from the operation of the facilities. Under *Intermountain Microwave,* the Commission has interpreted section 310(d) *de facto* control to require that the licensees exercise close working control of both the actual facilities/equipment operating the radiofrequency (RF) energy and the policy decisions, *e.g.*, business decisions, regarding use of the spectrum.

109. In its *Secondary Markets Report and Order,* the Commission determined that, in the context of spectrum leasing, it would replace the *Intermountain Microwave* standard with a more flexible standard for determining whether there has been a transfer of *de facto* control under section 310(d). Under the new *de facto* control standard adopted in that proceeding, we no longer require that, when leasing spectrum, licensees exercise close working control over station facilities, determine the services that are provided, or set the policies affecting the station(s) operating with the spectrum licensed to them under their authorizations. Instead, the Commission determined that licensees in applicable wireless services may lease spectrum usage rights to spectrum lessees, without the need for prior Commission approval, so long as the licensee continues to exercise effective working control over the use of the spectrum it leases.

110. The *Rural NPRM* stated that, where infrastructure sharing arrangements do not involve a transfer of control of licensed spectrum usage rights under section 310(d), Commission review is not required, but that infrastructure sharing arrangements that involve a transfer of control under section 310(d) require Commission review. The Commission noted that in the *Secondary Markets* proceeding it has streamlined the transfer of control and assignment process, and sought comment in the *Rural NPRM* on whether other steps may be taken that could further streamline this process. Comment was sought on the factors to consider in evaluating infrastructure sharing arrangements that require section 310(d) approval in order to effectively balance competition among providers and expanded coverage in rural areas.

111. *Discussion.* We believe that infrastructure sharing offers the potential for benefits to both providers and consumers. Infrastructure sharing should be encouraged because of the potential for savings in capital costs for construction of facilities necessary to deploy wireless services, and for the improved or enhanced coverage in rural and other areas that otherwise may not be economical for providers to offer without some form of sharing. As we observed in the *Rural NPRM,* infrastructure sharing arrangements have been considered in both the United States and in Europe, with apparently favorable results. The actions we take today seek to further encourage beneficial infrastructure sharing arrangements.

112. We determine in this *Report and Order* that a revised *de facto* control standard, different from the *de facto* control standard under *Intermountain Microwave,* should be extended to infrastructure sharing arrangements that only involve the sharing of facilities such as physical structures and equipment. Specifically, the revised *de facto* control standard for spectrum leasing in *Secondary Markets* shall apply for interpreting whether a licensee retains *de facto* control for purposes of section 310(d) when it is engaged in an infrastructure sharing arrangement. We believe that this policy will encourage the development of arrangements that potentially reduce costs for providers and improve coverage in rural areas. We note, however, that to the extent that licensees are sharing spectrum usage rights with third parties under spectrum leasing arrangements, such arrangements will be subject to the policies, rules, and procedures set forth in the Commission's *Secondary Markets* proceeding in WT Docket No. 00–230.

113. The Commission stated in the *Secondary Markets Report and Order* that revision of the *de facto* transfer of control test ''may be warranted as the public's interests and needs change and the nature of a service evolves.'' The Commission further stated that ''continuing to focus on one type of control (*e.g.*, control over facilities) may no longer constitute the best way to further the complex and sometimes competing public interest goals of today.'' The ''sea change'' that has taken place in the regulatory and technological environment for wireless services was addressed by the Commission, which identified some of the actions it has taken to promote innovative policies that seek to increase communications capacity and efficiency of spectrum use, and to make spectrum available for new uses and users.

114. There have been significant changes in the communications industry since the *Intermountain Microwave de facto* standard was established over 40 years ago, including the rise of new technologies for the industry and the Commission's increasing efforts to afford quick and effective means for parties to adapt to markets and to the needs of consumers. Under these circumstances, we no longer believe that it is necessary to continue to require that a licensee exercise immediate direct control over every facility that may be operating in connection with the provision of services using its spectrum. Accordingly, we will apply the more flexible *de facto* control standard set forth in the *Secondary Markets Report and Order* when interpreting whether a licensee (or spectrum lessee) retains *de facto* control for purposes of section 310(d) when it is engaged in an infrastructure sharing arrangement involving facilities only. Under this standard, the licensee (or spectrum lessee) remains responsible for ensuring compliance with the Communications Act and all applicable policies and rules. This responsibility includes maintaining reasonable operational oversight with respect to any activities relating to the infrastructure sharing arrangement so as to ensure that the operator of the facilities complies with all applicable technical and service rules, including safety guidelines relating to radiofrequency radiation. In addition, the licensee must retain responsibility for meeting all applicable frequency coordination obligations and resolving interference-related matters, and must retain the right to inspect the facility operations and to terminate the infrastructure sharing arrangement to ensure compliance.

115. The Commission retains the ability to investigate and terminate any infrastructure sharing arrangement to the extent it determines that the arrangement constitutes an unauthorized transfer of *de facto* control under our new standard.

116. Our elimination of the *Intermountain Microwave de facto* control standard with respect to infrastructure sharing arrangements

generally, however, in no way affects the application of our rules to determine eligibility for designated entity and entrepreneur licensee status. A designated entity or entrepreneur licensee will be permitted to enter into an infrastructure sharing arrangement, without application of our unjust enrichment rules and transfer restrictions, only so long as the arrangement does not result in another entity's becoming a controlling interest or affiliate of the licensee, such that the licensee would no longer meet our eligibility requirements for designated entity or entrepreneur benefits. For these determinations, our existing attribution rules, including our definitions of controlling interest and affiliation (which incorporate the *Intermountain Microwave* principles of *de facto* control), will continue to control. However, in determinations involving infrastructure sharing arrangements, our attribution rules will be applied in the same manner in which, as we clarified in the *Secondary Markets Report and Order,* they are to be applied in determinations involving spectrum manager leasing arrangements. We expect each designated entity or entrepreneur licensee contemplating entering into an infrastructure sharing arrangement to analyze in advance whether such an arrangement would adversely affect the licensee's ongoing eligibility for size-based benefits.

117. The assessment of potential competitive effects of transactions, whether they are transfers of control, license assignments, or infrastructure sharing arrangements, remains an important element of our policies to promote facilities-based competition and guard against the harmful effects of anticompetitive conduct. We believe that our encouragement of infrastructure sharing arrangements as potentially effective means to promote the provision of spectrum based services to rural areas is consistent with our consideration of competitive effects and potential competitive harm. Providers and consumers may be in a position to benefit from the potential for lower capital costs for facilities and improved coverage.

118. One commenter expressed concern that interference issues similar to those that have been raised in other proceedings may result from infrastructure sharing arrangements, particularly with respect to the potential for interference that may result from the collocation of antennas. Licensees that are parties to infrastructure sharing arrangements will be responsible for resolving all interference-related matters that may result from such arrangements in a manner consistent with the Commission's interference-based service rules. Our notification requirement that we adopt here also helps us to ensure that licensees and non-licensee parties to an arrangement are complying with our interference and non-interference related policies and rules.

119. *Potential Barriers* to *Infrastructure Sharing.* A number of comments request that the Commission act to remove impediments to infrastructure sharing at the state and local level, particularly as they relate to tower siting. The Commission is asked to form a national policy that would seek to remove these barriers and establish direction for state and local authorities to establish clear and consistent siting policies. Some comments ask generally that the Commission preempt state and local regulations that block the deployment of services in rural areas.

120. Section 332(c)(7) of the Act preserves state and local authority over zoning and land use decisions for personal wireless service facilities, but also limits that authority. The limitations include that state or local governments may not unreasonably discriminate among providers of functionally equivalent services, and may not regulate in a manner that prohibits or has the effect of prohibiting the provision of personal wireless services. A state or local government also must act on applications within a reasonable period of time, and must make any denial of an application in writing supported by substantial evidence in a written record. The statute also preempts state and local decisions to regulate the placement, construction, and modification of personal wireless service facilities on the basis of the environmental effects of radio frequency (RF) emissions to the extent the facilities comply with the Commission's RF rules.

121. We encourage state and local authorities, when considering requests to deploy wireless facilities and when establishing facilities siting policies, to consider the impacts of their decisions on the availability of competitive wireless service. We note some localities have imposed tower siting requirements that make both initial construction and subsequent sharing of facilities difficult. We believe that state and local governments should consider measures that would reduce regulatory burdens for those projects that are least likely to implicate local land use concerns, while retaining reasonable review processes for proposals that are more likely to have significant effects. In this regard, the Commission and its former Local and State Government Advisory Committee (LSGAC) have provided guidance to state and local authorities to assist them in devising efficient procedures for verifying that antenna facilities comply with the Commission's RF exposure guidelines. We will consider offering similar guidance in the future in response to specific needs.

122. With respect to preemption, as discussed above, section 332(c)(7) of the Communications Act of 1934 as amended, generally preserves local authority over land use decisions, and limits the Commission's authority in this area. In appropriate cases, the Commission or its Bureaus have considered petitions alleging that particular regulations impinge on areas within the Commission's exclusive jurisdiction. We will continue to address such issues in the future where supported by law.

123. Finally, we note that we have taken action to improve our own rules and procedures respecting other tower siting issues, including those relating to our environmental review, in order to facilitate the timely deployment of wireless services. We will continue to consider further improvements in the future where necessary.

4. Rural Radiotelephone Service/Basic Exchange Telecommunications Radio Service

124. *Background.* In the *Rural NPRM,* the Commission sought comment on several issues related to the current use and demand for service in the Rural Radiotelephone Service (RRS) and the Basic Exchange Telecommunications Radio Service (BETRS). Additionally, the Commission sought comment on whether its current rules and policies for RRS and BETRS are limiting factors towards a more expansive use of these services. As indicated in the *Rural NPRM*, RRS was established to provide, in most instances, basic telephone service to subscribers in locations deemed so remote that traditional wireline service or service by other means is not feasible. BETRS is a digital counterpart to the traditional, analog RRS, and can be characterized as more spectrally efficient than RRS, provides private calling, and has a much lower call blocking rate than RRS. All RRS and BETRS authorizations are issued on a secondary, non-interfering basis.

125. Specifically, in the *Rural NPRM*, the Commission sought comment on the current level of demand for RRS and BETRS and noted that according to its licensing records, a relatively low number of licenses have been issued for the spectrum. In addition, the

Commission sought comment on the demand for basic communications services, other than wireline, and inquired about how the demand is being met if it is not through the use of RRS and BETRS spectrum. Furthermore, the Commission sought comment on whether access to RRS and BETRS spectrum is an impediment to the provision of these services, if a demand exists.

126. With respect to current policies and rules, the Commission sought comment on the proposal to remove the eligibility restriction for BETRS that restricts the issuance of a license to only those entities that receive state approval to provide a basic exchange telephone service. The Commission also sought comment on whether expanding the secondary status of RRS and BETRS to other spectrum bands would facilitate and encourage construction in rural areas. Finally, the Commission sought comment on whether additional spectrum, issued on a primary basis, is needed at this time for RRS and BETRS.

127. *Discussion.* We conclude that it is appropriate to remove the eligibility restrictions contained within § 22.702 of our rules regarding state approval prior to the issuance of a BETRS license. Although no comments were received regarding this specific proposal, we believe the removal of this restriction is in the public interest. As it stands now, a potential BETRS licensee must demonstrate that it has received state approval to provide basic exchange telephone service prior to applying for a BETRS license. We believe by eliminating this restriction, a potential regulatory barrier is removed and the process for gaining access to BETRS spectrum is simplified and expedited. Nonetheless, we retain the current requirement that a BETRS station must be constructed within 12 months of the issuance of a license, therefore minimizing the potential for warehousing spectrum in those instances where a BETRS licensee does not receive state approval, where required, to provide basic exchange telephone service.

128. The Commission consolidated into the instant proceeding two petitions that seek reconsideration of its decision in the *Spectrum Cap Sunset Order.* In March 2002, the Commission sought comment on petitions filed by Dobson Communications Corporation, Western Wireless Corporation, and Rural Cellular Corporation (Dobson/Western/RCC) and Cingular Wireless LLC (Cingular) seeking reconsideration of the portion of the *Spectrum Cap Sunset Order* that retained the cellular cross-interest rule in RSAs. See Petitions for Reconsideration of Action in Rulemaking Proceeding, 67 FR 13183 (March 21, 2002). For the Commission's discussion and disposition of those two petitions see paragraphs 58 through 70 above and paragraph 182 below.

IV. Procedural Matters

129. As required by the Regulatory Flexibility Act (RFA), an Initial Regulatory Flexibility Analysis (IRFA) was incorporated in the *Notice of Proposed Rulemaking* in WT Docket Nos. 02–381, 01–14, and 03–202, released October 6, 2003. The Commission sought written public comment on the proposals in the *Rural NPRM*, including comment on the IRFA. This Final Regulatory Flexibility Analysis (FRFA) conforms to the RFA.

A. Need for, and Objectives of, the Report and Order

130. We adopt several measures, as indicated below, intended to increase the ability of wireless service providers to use licensed spectrum resources flexibly and efficiently to offer a variety of services in a cost-effective manner. The Commission takes steps to promote access to spectrum and facilitate capital formation for entities seeking to serve rural areas or improve service in rural areas. We expect that these decisions will facilitate the deployment of new and advanced wireless services, including broadband services, and thereby foster much-needed economic development.

131. *Definition of ''rural area''.* We establish the presumption that, unless otherwise specified in the context of specific policies or regulations governing wireless communications services, counties with a population density of 100 persons or less per square mile constitute ''rural areas'' for purposes of the Commission's wireless spectrum policies.

132. *Size of geographic service areas and re-licensing issues.* We examine Commission policies affecting access to spectrum and the provision of service in rural areas. In particular, the Commission considers its policies governing the licensing of spectrum, both with respect to initial licensing through the competitive bidding process, as well as subsequent re-licensing after an authorization is returned to the Commission. Specifically, the *Report and Order* affirms that the Commission will continue to establish licensing areas on a service-by-service (or band-by-band) basis as appropriate, based upon the flexibility that such an approach provides and our past experience in determining the initial size of service areas. The Commission also reaffirms that when developing rules for licensing individual services in the future, it will consider using smaller service areas in some spectrum blocks to encourage deployment in rural areas for the service in question.

133. *Cellular cross-interest rule and conditional security interests to RUS.* We also take the following steps to facilitate increased access to capital for rural licensees, and eliminate the remaining components of the cellular cross-interest rule that currently apply only in Rural Service Area (RSA) markets and transitions to case-by-case review for cellular transactions, while closely examining those that present a significant likelihood of substantial competitive harm in a market. The Commission also revises the policies governing security interests in wireless licenses by permitting licensees, at their discretion, to grant such interests to the Department of Agriculture's Rural Utilities Service (RUS).

134. *Increase of power limits for certain services.* We amend the Commission's regulations to increase permissible power levels for base stations in certain wireless services that are located in rural areas or that provide coverage to otherwise unserved areas. In doing so, the Commission anticipates that coverage of such areas will be more economical, as licensees may provide increased coverage of rural areas using fewer base stations and less associated infrastructure. The Commission believes these actions will increase licensee flexibility and permit more cost-effective coverage of rural areas.

135. *Substantial service construction requirement.* We also amend regulations to permit certain geographic-area licensees to provide substantial service as a means of complying with their construction requirements, thus countering existing disincentives to build out less densely populated areas.

136. *Infrastructure sharing.* Finally, we conclude that the revised *de facto* control standard for spectrum leasing adopted in the Commission's *Secondary Markets* proceeding generally shall apply for interpreting whether a licensee retains *de facto* control for purposes of section 310(d) of the Communications Act when it is engaged in an infrastructure sharing arrangement.

B. Summary of Significant Issues Raised by Public Comments in Response to the IRFA

137. We received no comments in response to the IRFA. However, as described below, we have nonetheless considered potential significant

economic impacts of our actions on small entities.

C. Description and Estimate of the Number of Small Entities to Which the Rules Will Apply

138. The RFA directs agencies to provide a description of, and where feasible, an estimate of the number of small entities that may be affected by the proposed rules, if adopted. The RFA generally defines the term ''small entity'' as having the same meaning as the terms ''small business,'' ''small organization,'' and ''small governmental jurisdiction.'' In addition, the term ''small business'' has the same meaning as the term ''small business concern'' under the Small Business Act. A ''small business concern'' is one which: (1) Is independently owned and operated; (2) is not dominant in its field of operation; and (3) satisfies any additional criteria established by the Small Business Administration (SBA).

139. *Cellular Licensees.* The SBA has developed a small business size standard for small businesses in the category ''Cellular and Other Wireless Telecommunications.'' Under that SBA category, a business is small if it has 1,500 or fewer employees. According to the Bureau of the Census, only twelve firms out of a total of 1,238 cellular and other wireless telecommunications firms operating during 1997 had 1,000 or more employees. Therefore, even if all 12 of these firms were cellular telephone companies, nearly all cellular carriers are small businesses under the SBA's definition.

140. *220 MHz Radio Service—Phase I Licensees.* The 220 MHz service has both Phase I and Phase II licenses. Phase I licensing was conducted by lotteries in 1992 and 1993. There are approximately 1,515 such non-nationwide licensees and four nationwide licensees currently authorized to operate in the 220 MHz band. The Commission has not developed a definition of small entities specifically applicable to such incumbent 220 MHz Phase I licensees. To estimate the number of such licensees that are small businesses, we apply the small business size standard under the SBA rules applicable to ''Cellular and Other Wireless Telecommunications'' companies. This category provides that a small business is a wireless company employing no more than 1,500 persons. According to the Census Bureau data for 1997, only 12 firms out of a total of 1,238 such firms that operated for the entire year, had 1,000 or more employees. If this general ratio continues in the context of Phase I 220 MHz licensees, the Commission estimates that nearly all such licensees are small businesses under the SBA's small business standard.

141. *220 MHz Radio Service—Phase II Licensees.* The 220 MHz service has both Phase I and Phase II licenses. The Phase II 220 MHz service is subject to spectrum auctions. For this service in 1997, we adopted a small business size standard for defining ''small'' and ''very small'' businesses for purposes of determining their eligibility for special provisions such as bidding credits and installment payments. This small business standard indicates that a ''small business'' is an entity that, together with its affiliates and controlling principals, has average gross revenues not exceeding $15 million for the preceding three years. A ''very small business'' is defined as an entity that, together with its affiliates and controlling principals, has average gross revenues that do not exceed $3 million for the preceding three years. The SBA has approved these small size standards. Auctions of Phase II licenses commenced on September 15, 1998, and closed on October 22, 1998. In the first auction, 908 licenses were auctioned in three different-sized geographic areas: Three nationwide licenses, 30 Regional Economic Area Group (EAG) Licenses, and 875 Economic Area (EA) Licenses. Of the 908 licenses auctioned, 693 were sold. Thirty-nine small businesses won 373 licenses in the first 220 MHz auction. A second auction included 225 licenses: 216 EA licenses and 9 EAG licenses. Fourteen companies claiming small business status won 158 licenses. A third auction included four licenses: 2 BEA licenses and 2 EAG licenses in the 220 MHz Service. No small or very small business won any of these licenses.

142. *Lower 700 MHz Band Licenses.* We adopted criteria for defining three groups of small businesses for purposes of determining their eligibility for special provisions such as bidding credits. We have defined a small business as an entity that, together with its affiliates and controlling principals, has average gross revenues not exceeding $40 million for the preceding three years. A very small business is defined as an entity that, together with its affiliates and controlling principals, has average gross revenues that are not more than $15 million for the preceding three years. Additionally, the lower 700 MHz Service has a third category of small business status that may be claimed for Metropolitan/Rural Service Area (MSA/RSA) licenses. The third category is entrepreneur, which is defined as an entity that, together with its affiliates and controlling principals, has average gross revenues that are not more than $3 million for the preceding three years. The SBA has approved these small size standards. An auction of 740 licenses (one license in each of the 734 MSAs/RSAs and one license in each of the six EAGs) commenced on August 27, 2002, and closed on September 18, 2002. Of the 740 licenses available for auction, 484 licenses were sold to 102 winning bidders. Seventy-two of the winning bidders claimed small business, very small business or entrepreneur status and won a total of 329 licenses. A second auction commenced on May 28, 2003, and closed on June 13, 2003, and included 256 licenses: 5 EAG licenses and 476 CMA licenses. Seventeen winning bidders claimed small or very small business status and won sixty licenses, and nine winning bidders claimed entrepreneur status and won 154 licenses.

143. *Upper 700 MHz Band Licenses.* In 2001, the Commission authorized service in the upper 700 MHz band. The related auction, previously scheduled for January 13, 2003, has been postponed.

144. *Paging.* In 1997, we adopted a size standard for ''small businesses'' for purposes of determining their eligibility for special provisions such as bidding credits and installment payments. A small business is an entity that, together with its affiliates and controlling principals, has average gross revenues not exceeding $15 million for the preceding three years. The SBA has approved this definition. An auction of Metropolitan Economic Area (MEA) licenses commenced on February 24, 2000, and closed on March 2, 2000. Of the 2,499 licenses auctioned, 985 were sold. Fifty-seven companies claiming small business status won 440 licenses. An auction of Metropolitan Economic Area (MEA) and EA licenses commenced on October 30, 2001, and closed on December 5, 2001. Of the 15,514 licenses auctioned, 5,323 were sold. One-hundred thirty-two companies claiming small business status purchased 3,724 licenses. A third auction, consisting of 8,874 licenses in each of 175 EAs and 1,328 licenses in all but three of the 51 MEAs commenced on May 13, 2003, and closed on May 28, 2003. Seventy-seven bidders claiming small or very small business status won 2,093 licenses. Currently, there are approximately 24,000 Private Paging site-specific licenses and 74,000 Common Carrier Paging licenses. According to the most recent *Trends in Telephone Service,* 608 private and common carriers reported that they were engaged in the provision

of either paging or ''other mobile'' services. Of these, we estimate that 589 are small, under the SBA-approved small business size standard. We estimate that the majority of private and common carrier paging providers would qualify as small entities under the SBA definition.

145. *Broadband Personal Communications Service (PCS).* The broadband PCS spectrum is divided into six frequency blocks designated A through F, and the Commission has held auctions for each block. The Commission has created a small business size standard for Blocks C and F as an entity that has average gross revenues of less than $40 million in the three previous calendar years. For Block F, an additional small business size standard for ''very small business'' was added and is defined as an entity that, together with its affiliates, has average gross revenues of not more than $15 million for the preceding three calendar years. These small business size standards, in the context of broadband PCS auctions, have been approved by the SBA. No small businesses within the SBA-approved small business size standards bid successfully for licenses in Blocks A and B. There were 90 winning bidders that qualified as small entities in the Block C auctions. A total of 93 ''small'' and ''very small'' business bidders won approximately 40 percent of the 1,479 licenses for Blocks D, E, and F. On March 23, 1999, the Commission reauctioned 155 C, D, E, and F Block licenses; there were 113 small business winning bidders.

146. *Narrowband PCS.* The Commission held an auction for Narrowband PCS licenses that commenced on July 25, 1994, and closed on July 29, 1994. A second commenced on October 26, 1994 and closed on November 8, 1994. For purposes of the first two Narrowband PCS auctions, ''small businesses'' were entities with average gross revenues for the prior three calendar years of $40 million or less. Through these auctions, the Commission awarded a total of 41 licenses, 11 of which were obtained by four small businesses. To ensure meaningful participation by small business entities in future auctions, the Commission in 2000 for this service adopted a two-tiered small business size standard. A ''small business'' is an entity that, together with affiliates and controlling interests, has average gross revenues for the three preceding years of not more than $40 million. A ''very small business'' is an entity that, together with affiliates and controlling interests, has average gross revenues for the three preceding years of not more than $15 million. The SBA has approved these small business size standards. A third auction commenced on October 3, 2001 and closed on October 16, 2001. Here, five bidders won 317 (MTA and nationwide) licenses. Three of these claimed status as a small or very small entity and won 311 licenses. A fourth auction commenced on September 24, 2003 and closed on September 29, 2003. Here, four bidders won 48 licenses. Four of these claimed status as a very small entity and won 48 licenses. Finally, a fifth auction commenced on September 24, 2003 and closed on September 25, 2003. Here, one bidder won five licenses. That bidder claimed status as a very small entity.

147. *Specialized Mobile Radio* (SMR). The Commission awards ''small entity'' bidding credits in auctions for SMR geographic area licenses in the 800 MHz and 900 MHz bands to firms that had revenues of no more than $15 million in each of the three previous calendar years. The Commission awards ''very small entity'' bidding credits to firms that had revenues of no more than $3 million in each of the three previous calendar years. The SBA has approved these small business size standards for the 900 MHz Service. The Commission has held auctions for geographic area licenses in the 800 MHz and 900 MHz bands. The 900 MHz SMR auction began on December 5, 1995, and closed on April 15, 1996. Sixty bidders claiming that they qualified as small businesses under the $15 million size standard won 263 geographic area licenses in the 900 MHz SMR band. The 800 MHz SMR auction for the upper 200 channels began on October 28, 1997, and was completed on December 8, 1997. Ten bidders claiming that they qualified as small businesses under the $15 million size standard won 38 geographic area licenses for the upper 200 channels in the 800 MHz SMR band. A second auction for the 800 MHz band was held on January 10, 2002 and closed on January 17, 2002 and included 23 BEA licenses. One bidder claiming small business status won five licenses.

148. The auction of the 1,050 800 MHz SMR geographic area licenses for the General Category channels began on August 16, 2000, and was completed on September 1, 2000. Eleven bidders won 108 geographic area licenses for the General Category channels in the 800 MHz SMR band qualified as small businesses under the $15 million size standard. In an auction completed on December 5, 2000, a total of 2,800 Economic Area licenses in the lower 80 channels of the 800 MHz SMR service were sold. Of the 22 winning bidders, 19 claimed ''small business'' status and won 129 licenses. Thus, combining all three auctions, 40 winning bidders for geographic licenses in the 800 MHz SMR band claimed status as small business.

149. In addition, there are numerous incumbent site-by-site SMR licensees and licensees with extended implementation authorizations in the 800 and 900 MHz bands. We do not know how many firms provide 800 MHz or 900 MHz geographic area SMR pursuant to extended implementation authorizations, nor how many of these providers have annual revenues of no more than $15 million. One firm has over $15 million in revenues. We assume, for purposes of this analysis, that all of the remaining existing extended implementation authorizations are held by small entities, as that small business size standard is established by the SBA.

150. *Private Land Mobile Radio* (PLMR). PLMR systems serve an essential role in a range of industrial, business, land transportation, and public safety activities. These radios are used by companies of all sizes operating in all U.S. business categories, and are often used in support of the licensee's primary (non-telecommunications) business operations. For the purpose of determining whether a licensee of a PLMR system is a small business as defined by the SBA, we could use the definition for ''Cellular and Other Wireless Telecommunications.'' This definition provides that a small entity is any such entity employing no more than 1,500 persons. The Commission does not require PLMR licensees to disclose information about number of employees, so the Commission does not have information that could be used to determine how many PLMR licensees constitute small entities under this definition. Moreover, because PLMR licensees generally are not in the business of providing cellular or other wireless telecommunications services but instead use the licensed facilities in support of other business activities, we are not certain that the Cellular and Other Wireless Telecommunications category is appropriate for determining how many PLMR licensees are small entities for this analysis. Rather, it may be more appropriate to assess PLMR licensees under the standards applied to the particular industry subsector to which the licensee belongs.

151. The Commission's 1994 Annual Report on PLMRs indicates that at the end of fiscal year 1994, there were 1,087,267 licensees operating 12,481,989 transmitters in the PLMR bands below 512 MHz. Because any

entity engaged in a commercial activity is eligible to hold a PLMR license, the revised rules in this context could potentially impact every small business in the United States.

152. *Fixed Microwave Services.* Fixed microwave services include common carrier, private-operational fixed, and broadcast auxiliary radio services. Currently, there are approximately 22,015 common carrier fixed licensees and 61,670 private operational-fixed licensees and broadcast auxiliary radio licensees in the microwave services. The Commission has not yet defined a small business with respect to microwave services. For purposes of this FRFA, we will use the SBA's definition applicable to ''Cellular and Other Wireless Telecommunications'' companies—that is, an entity with no more than 1,500 persons. The Commission does not have data specifying the number of these licensees that have more than 1,500 employees, and thus is unable at this time to estimate with greater precision the number of fixed microwave service licensees that would qualify as small business concerns under the SBA's small business size standard. Consequently, the Commission estimates that there are 22,015 or fewer small common carrier fixed licensees and 61,670 or fewer small private operational-fixed licensees and small broadcast auxiliary radio licensees in the microwave services that may be affected by the rules and policies adopted herein. The Commission notes, however, that the common carrier microwave fixed licensee category includes some large entities.

153. *Wireless Communications Services.* This service can be used for fixed, mobile, radiolocation, and digital audio broadcasting satellite uses. The Commission defined ''small business'' for the wireless communications services (WCS) auction as an entity with average gross revenues of $40 million for each of the three preceding years, and a ''very small business'' as an entity with average gross revenues of $15 million for each of the three preceding years. The SBA has approved these definitions. The FCC auctioned geographic area licenses in the WCS service. In the auction, which commenced on April 15, 1997 and closed on April 25, 1997, there were seven bidders that won 31 licenses that qualified as very small business entities, and one bidder that won one license that qualified as a small business entity. An auction for one license in the 1670–1674 MHz band commenced on April 30, 2003 and closed the same day. One license was awarded. The winning bidder was not a small entity.

154. *39 GHz Service.* The Commission defines ''small entity'' for 39 GHz licenses as an entity that has average gross revenues of less than $40 million in the three previous calendar years. ''Very small business'' is defined as an entity that, together with its affiliates, has average gross revenues of not more than $15 million for the preceding three calendar years. The SBA has approved these definitions. The auction of the 2,173 39 GHz licenses began on April 12, 2000, and closed on May 8, 2000. The 18 bidders who claimed small business status won 849 licenses.

155. *Local Multipoint Distribution Service.* An auction of the 986 Local Multipoint Distribution Service (LMDS) licenses began on February 18, 1998, and closed on March 25, 1998. The Commission defined ''small entity'' for LMDS licenses as an entity that has average gross revenues of less than $40 million in the three previous calendar years. An additional classification for ''very small business'' was added and is defined as an entity that, together with its affiliates, has average gross revenues of not more than $15 million for the preceding three calendar years. These regulations defining ''small entity'' in the context of LMDS auctions have been approved by the SBA. There were 93 winning bidders that qualified as small entities in the LMDS auctions. A total of 93 small and very small business bidders won approximately 277 A Block licenses and 387 B Block licenses. On March 27, 1999, the Commission re-auctioned 161 licenses; there were 32 small and very small business winning bidders that won 119 licenses.

156. *218–219 MHz Service.* The first auction of 218–219 MHz (previously referred to as the Interactive and Video Data Service or IVDS) spectrum resulted in 178 entities winning licenses for 594 Metropolitan Statistical Areas (MSAs). Of the 594 licenses, 567 were won by 167 entities qualifying as a small business. For that auction, we defined a small business as an entity that, together with its affiliates, has no more than a $6 million net worth and, after federal income taxes (excluding any carry over losses), has no more than $2 million in annual profits each year for the previous two years. For this service in 1999, we defined a small business as an entity that, together with its affiliates and persons or entities that hold interests in such an entity and their affiliates, has average annual gross revenues not exceeding $15 million for the preceding three years. A very small business is defined as an entity that, together with its affiliates and persons or entities that hold interests in such an entity and its affiliates, has average annual gross revenues not exceeding $3 million for the preceding three years. The SBA has approved of these definitions. At this time, we cannot estimate the number of licenses that will be won by entities qualifying as small or very small businesses under our rules in future auctions of 218–219 MHz spectrum. Given the success of small businesses in the previous auction, and the prevalence of small businesses in the subscription television services and message communications industries, we assume for purposes of this FRFA that in future auctions, many, and perhaps all, of the licenses may be awarded to small businesses.

157. *Location and Monitoring Service* (LMS). Multilateration LMS systems use non-voice radio techniques to determine the location and status of mobile radio units. For purposes of auctioning LMS licenses, the Commission has defined ''small business'' as an entity that, together with controlling interests and affiliates, has average annual gross revenues for the preceding three years not exceeding $15 million. A ''very small business'' is defined as an entity that, together with controlling interests and affiliates, has average annual gross revenues for the preceding three years not exceeding $3 million. These definitions have been approved by the SBA. An auction for LMS licenses commenced on February 23, 1999, and closed on March 5, 1999. Of the 528 licenses auctioned, 289 licenses were sold to four small businesses. We cannot accurately predict the number of remaining licenses that could be awarded to small entities in future LMS auctions.

158. *Rural Radiotelephone Service.* We use the SBA definition applicable to cellular and other wireless telecommunication companies, *i.e.*, an entity employing no more than 1,500 persons. There are approximately 1,000 licensees in the Rural Radiotelephone Service, and the Commission estimates that there are 1,000 or fewer small entity licensees in the Rural Radiotelephone Service that may be affected by the rules and policies adopted herein.

159. *Air-Ground Radiotelephone Service.* We use the SBA definition applicable to cellular and other wireless telecommunication companies, *i.e.*, an entity employing no more than 1,500 persons. There are approximately 10 licensees in the Air-Ground Radiotelephone Service, and the Commission estimates that almost all of them qualify as small entities under the SBA definition.

160. *Offshore Radiotelephone Service.* This service operates on several ultra high frequency (UHF) TV broadcast channels that are not used for TV broadcasting in the coastal area of the states bordering the Gulf of Mexico. At present, there are approximately 55 licensees in this service. We use the SBA definition applicable to cellular and other wireless telecommunication companies, *i.e.*, an entity employing no more than 1,500 persons. The Commission is unable at this time to estimate the number of licensees that would qualify as small entities under the SBA definition. The Commission assumes, for purposes of this FRFA, that all of the 55 licensees are small entities, as that term is defined by the SBA.

161. *Multiple Address Systems* (MAS). Entities using MAS spectrum, in general, fall into two categories: (1) Those using the spectrum for profit-based uses, and (2) those using the spectrum for private internal uses. With respect to the first category, the Commission defines ''small entity'' for MAS licenses as an entity that has average gross revenues of less than $15 million in the three previous calendar years. ''Very small business'' is defined as an entity that, together with its affiliates, has average gross revenues of not more than $3 million for the preceding three calendar years. The SBA has approved of these definitions. The majority of these entities will most likely be licensed in bands where the Commission has implemented a geographic area licensing approach that would require the use of competitive bidding procedures to resolve mutually exclusive applications. The Commission's licensing database indicates that, as of January 20, 1999, there were a total of 8,670 MAS station authorizations. Of these, 260 authorizations were associated with common carrier service. In addition, an auction for 5,104 MAS licenses in 176 EAs began November 14, 2001, and closed on November 27, 2001. Seven winning bidders claimed status as small or very small businesses and won 611 licenses.

162. With respect to the second category, which consists of entities that use, or seek to use, MAS spectrum to accommodate their own internal communications needs, we note that MAS serves an essential role in a range of industrial, safety, business, and land transportation activities. MAS radios are used by companies of all sizes, operating in virtually all U.S. business categories, and by all types of public safety entities. For the majority of private internal users, the definitions developed by the SBA would be more appropriate. The applicable definition of small entity in this instance appears to be the ''Cellular and Other Wireless Telecommunications'' definition under the SBA rules. This definition provides that a small entity is any entity employing no more than 1,500 persons. The Commission's licensing database indicates that, as of January 20, 1999, of the 8,670 total MAS station authorizations, 8,410 authorizations were for private radio service, and of these, 1,433 were for private land mobile radio service.

163. *Incumbent 24 GHz Licensees.* The rules that we adopt could affect incumbent licensees who were relocated to the 24 GHz band from the 18 GHz band, and applicants who wish to provide services in the 24 GHz band. The Commission did not develop a definition of small entities applicable to existing licensees in the 24 GHz band. Therefore, the applicable definition of small entity is the definition under the SBA rules for ''Cellular and Other Wireless Telecommunications.'' This definition provides that a small entity is any entity employing no more than 1,500 persons. The 1992 Census of Transportation, Communications and Utilities, conducted by the Bureau of the Census, which is the most recent information available, shows that only 12 radiotelephone (now Wireless) firms out of a total of 1,178 such firms that operated during 1992 had 1,000 or more employees. This information notwithstanding, we believe that there are only two licensees in the 24 GHz band that were relocated from the 18 GHz band: Teligent and TRW, Inc. It is our understanding that Teligent and its related companies have less than 1,500 employees, though this may change in the future. TRW is not a small entity. Thus, only one incumbent licensee in the 24 GHz band is a small business entity.

164. *Future 24 GHz Licensees.* With respect to new applicants in the 24 GHz band, we have defined ''small business'' as an entity that, together with controlling interests and affiliates, has average annual gross revenues for the three preceding years not exceeding $15 million. ''Very small business'' in the 24 GHz band is defined as an entity that, together with controlling interests and affiliates, has average gross revenues not exceeding $3 million for the preceding three years. The SBA has approved these definitions. The Commission will not know how many licensees will be small or very small businesses until the auction, if required, is held.

165. *700 MHz Guard Band Licenses.* For this service in 2000, we adopted a small business size standard for ''small businesses'' and ''very small businesses'' for purposes of determining their eligibility for special provisions such as bidding credits and installment payments. A ''small business'' is an entity that, together with its affiliates and controlling principals, has average gross revenues not exceeding $15 million for the preceding three years. Additionally, a ''very small business'' is an entity that, together with its affiliates and controlling principals, has average gross revenues that are not more than $3 million for the preceding three years. An auction of 52 MEA licenses commenced on September 6, 2000, and closed on September 21, 2000. Of the 104 licenses auctioned, 96 licenses were sold to nine bidders. Five of these bidders were small businesses that won a total of 26 licenses. A second auction of 700 MHz Guard Band licenses commenced on February 13, 2001 and closed on February 21, 2001. All eight of the licenses auctioned were sold to three bidders. One of these bidders was a small business that won a total of two licenses.

166. In addition, the SBA has developed a small business size standard for Cable and Other Program Distribution, which includes all such companies generating $12.5 million or less in annual receipts. According to Census Bureau data for 1997, there were a total of 1,311 firms in this category, total, that had operated for the entire year. Of this total, 1,180 firms had annual receipts of under $10 million, and an additional 52 firms had receipts of $10 million or more but less than $25 million. Consequently, we estimate that the majority of providers in this service category are small businesses that may be affected by the rules and policies proposed in the *Rural NPRM*.

C. Description of Projected Reporting, Recordkeeping and Other Compliance Requirements

167. With respect to the cellular cross-interest rule, in the event that a party with a controlling or otherwise attributable interest in one cellular licensee within an RSA obtains a non-controlling interest of more than 10 percent in the other cellular carrier, the Commission will require that the cellular licensee file a notification with the Commission that will include updated ownership information (FCC Form 602) to reflect this investment. This notification requirement will sunset at the earlier of: (1) Five years after the effective date of this item, or (2) at the cellular licensee's specific renewal deadline.

D. Steps Taken To Minimize Significant Economic Impact on Small Entities, and Significant Alternatives Considered

168. The RFA requires an agency to describe any significant alternatives that it has considered in reaching its proposed approach, which may include the following four alternatives (among others): (1) The establishment of differing compliance or reporting requirements or timetables that take into account the resources available to small entities; (2) the clarification, consolidation, or simplification of compliance or reporting requirements under the rule for small entities; (3) the use of performance, rather than design, standards; and (4) an exemption from coverage of the rule, or any part thereof, for small entities.

169. We adopt several measures intended to increase the ability of wireless service providers to use licensed spectrum resources flexibly and efficiently to offer a variety of services in a cost-effective manner. The Commission also takes steps to promote access to spectrum and facilitate capital formation for entities, including small entities, seeking to serve rural areas or improve service in rural areas. As explained *infra*, the actions set forth in this *Report and Order* are consistent with the RFA. Given that many carriers serving or seeking to serve rural areas may be considered small entities for FRFA purposes, the steps taken in this *Report and Order* will aid such entities.

170. *Definition of ''rural area''.* We establish a baseline definition of ''rural area'' that includes those counties (or the equivalent) with a population density of 100 persons or less per square mile. While some supported alternative plans such as defining ''rural areas'' as any area within an RSA or refraining from adopting new definitions at all, we rejected these alternatives because it believes its county- and population-based definition provides an appropriate practical guideline for carriers, including carriers qualifying as small entities, which serve or seek to serve rural areas. We believe the ''100 persons or less'' definition best serves the Commission's goals both in ease of the definition's administration and its foundation in widely available population data. Further, by treating the designation not as a uniform definition but rather as a presumption that will apply only to Commission proceedings for which the term ''rural area'' has not been expressly defined, the Commission can maintain continuity and avoid confusion with respect to definitions of ''rural'' already in existence for specific policies.

171. *Size of geographic service areas.* We conclude that maintaining the flexibility to establish geographic areas on a service-by-service basis and promoting the use of a variety of service areas, including small areas such as MSAs/RSAs, are in the public interest. Some commenters made an alternative proposal that the Commission should mandate that small markets such as RSAs are available in every future auction in order to ensure that small carriers are able to acquire licenses at auction. We also received a variety of suggestions on the appropriate size of geographic areas, ranging from a belief that all licenses should be based on MSAs/RSAs to the recommendation of even smaller areas based on counties. We rejects those alternatives, concluding that service area size should not be determined by a bright-line rule as some suggest but rather on service-by-service basis so that the Commission can evaluate all factors relevant to the types of spectrum being licensed.

172. When determining the scope of geographic licenses, we generally consider a number of factors, including the size for each area or areas that will be licensed; the amount of spectrum to be available under each license and whether there should be paired spectrum blocks available for auction. We have designated various sizes of geographic service areas, including smaller market sizes, in order to encourage participation in spectrum auctions and to facilitate deployment of wireless services. Our service-specific approach ensures flexibility while providing an opportunity for spectrum to be made available over small areas such as MSAs or RSAs depending on the record and other considerations relevant to the specific spectrum. This in turn increases the likelihood of service to rural markets by all carriers, including small entities.

173. *Re-licensing issues.* In this document, we conclude that because secondary markets rules and policies are aimed at improving access to spectrum in an efficient manner for all carriers, including small entities, and we therefore would not revise any of its specific re-licensing policies at this time. Before reaching this conclusion, we sought comment on when, and under what circumstances, we should apply re-licensing provisions to prospective spectrum designations in order to evaluate mechanisms that it could employ in the future that would potentially increase service by making spectrum available to those seeking to serve a given area, particularly if the area is rural in nature. We sought comment on a number of different re-licensing mechanisms that could result in increased access to spectrum, including a ''keep what you use'' approach, a ''complete forfeiture'' approach, and geographic overlays. In reaching our decision, we fully considered but rejected, at this time, the ''keep what you use'' re-licensing approach in the context of future band designations. We indicated that, after being given time to mature and take effect, if the secondary markets rules and policies do not provide sufficient incentives to increase spectrum access in rural areas, we would support future consideration of ''keep what you use'' approaches in the context of specific service rulemakings for new licensed services.

174. *Cellular cross-interest rule.* We eliminate the remaining components of the cellular cross-interest rule that currently apply only in RSAs and transitions to case-by-case review for cellular transactions. To facilitate additional access to capital by cellular carriers in rural areas, the Commission, before adopting this new rule, sought comment regarding whether the prohibition against cellular cross-interests in all RSAs remains in the public interest and whether the current cross-interest rule should be retained in RSAs with three or fewer CMRS competitors. Alternatively, we sought comment on whether to eliminate the prohibition for all RSAs where the ownership interest being obtained is not a controlling interest (*i.e.*, where the interest is a non-controlling interest and where the transaction otherwise would not require prior FCC approval). We, however, rejected these alternatives and found that elimination of the cellular cross-interest rule and reliance on a uniform case-by-case review process for all aggregations of spectrum and potentially anticompetitive cellular cross-interests in RSAs is currently the better approach as compared to the old, prophylactic limits. We believe that modification of the rule is necessary to better encourage more transactions and levels of financing that are in the public interest while still maintaining much of the protection afforded by the cellular cross-interest rule. We recognize that the approach limiting cross-interests in RSAs, as well as the proposal to eliminate the rule only in counties with more than three competitors, may interfere with investment in rural areas by discouraging certain financing in the RSA portions of a regional market but not in the MSA portions. We believe that elimination of the cellular cross-interest rule will provide greater

flexibility to all carriers, including small entities.

175. *Conditional security interests to RUS.* We relax our security interest policy to permit commercial and private wireless, terrestrial-based licensees to grant RUS a conditional security interest in their FCC licenses. We believe this action will significantly increase the financing opportunities for all licensees, including those classified as small entities, by increasing the value of their available collateral. Although one commenter suggested in the alternative that permitting RUS to obtain a security interest in an FCC license would make the RUS lending process more onerous, the Commission rejected this idea and believes that its new policy will enhance RUS loan opportunities. We believe that allowing FCC licenses to be used as collateral will serve the public interest by facilitating licensees' access to capital. In doing so, the policy will provide increased flexibility for all licensees, including small entities, seeking to expand into rural areas.

176. *Increase of power limits for certain services.* We amend our regulations to increase cellular, PCS, and AWS power limits in rural areas as a means of encouraging service to these areas. In doing so, the Commission evaluated the technical and operations rules for the various services at issue and found that increasing power limits may provide measurable benefits without creating harmful interference. Although it considered and alternative proposal to adopt such flexibility for other services in addition to cellular, PCS, and AWS, we rejected this alternative due to lack of support in the record. However, licensees in other services may file a request for waiver of service-specific power limits.

177. *Substantial service construction requirement.* We amend our regulations to provide a substantial service construction benchmark for the following licensees: 30 MHz broadband PCS licensees; 800 MHz SMR licensees (blocks A, B, and C); certain 220 MHz licensees; LMS licensees; and 700 MHz public safety licensees. These licensees now have the option of satisfying their construction requirements by providing substantial service or by complying with other service-specific construction benchmarks already available to them under the Commission's rules. As part of the amendments and in order to provide licensees with guidance, we adopt safe harbors for providing substantial service to rural areas: A licensee will be deemed to have met the substantial service requirement if it provides coverage to at least 75 percent of the geographic area of at least 20 percent of the ''rural areas'' within its licensed area. With respect to fixed wireless services, the substantial service requirement is met if a licensee constructs at least one end of a permanent link in at least 20 percent of the number of ''rural areas'' within its licensed area.

178. We implement this rule change in order to increase licensees' flexibility to develop rural-focused business plans and to allow all licensees, including small entities, to deploy spectrum-based services in more sparsely populated areas without being bound to concrete population or geographic coverage requirements. Certain commenters urged the adoption of a substantial service standard only for those licensees with ''small geographic territories.'' We rejected this alternative, stating that it would only result in focused coverage of populated areas instead of more rural areas. We also rejected proposals for a ''very rural area'' safe harbor or to modify safe harbors to include a population component. We noted that several commenters proposed as an alternative that a population component be included to make the safe harbor more meaningful for licensees whose licensed areas include counties with large land areas. These commenters argued that in such circumstances, it may be easier for a licensee to satisfy population requirements instead of the substantial service safe harbor. In rejecting these alternatives, we've stated that the safe harbors are not intended to be the only means of providing substantial service, and that we will take into consideration a situation in which a licensee is serving a ''very rural area'' or a very large geographic area.

179. *Infrastructure sharing.* We adopt a more flexible *de facto* control standard when interpreting whether a licensee (or spectrum lessee) retains *de facto* control for purposes of section 310(d) when engaging in an infrastructure sharing arrangement involving facilities only. Although the *Secondary Markets Report and Order* initially set out this policy for the purposes of spectrum sharing only, the Commission believes that extending this policy to infrastructure sharing arrangements will provide the potential for savings in both capital costs for the construction of facilities and for improved coverage in rural areas. The Commission noted that most commenters supported the adoption of this more flexible standard, which they believe will help to alleviate the significant financial barriers small regional entities face when constructing wireless networks. Some commenters, on the other hand, stated their concern with the potential for interference that may result from the collocation of antennas. In rejecting this concern as needless, the Commission pointed out that all parties to infrastructure sharing arrangements, including small entities, must continue to comply with the Commission's interference and non-interference related rules and policies.

F. Reports to Congress and SBA

180. The Commission will send a copy of this *Report and Order*, including the FRFA, in a report to be sent to Congress pursuant to the Congressional Review Act. In addition, the Commission will send a copy of the *Report and Order*, including this FRFA, to the Chief Counsel for Advocacy of the Small Business Administration. In addition, the Commission's Consumer and Governmental Affairs Bureau, Reference Information Center, will send a copy of this *Report and Order*, including the Final Regulatory Flexibility Analysis, to the Chief Counsel for Advocacy of the Small Business Administration.

V. Ordering Clauses

181. Pursuant to the authority contained in sections 4(i), 11, 303(r), 309(j) and 706 of the Communications Act of 1934, as amended, 47 U.S.C. 154(i), 157, 161, 303(r), and 309(j), the *Report and Order* is adopted.

182. The Petition for Reconsideration filed by Cingular Wireless LLC, in WT Docket No. 01–14 on February 13, 2002, and the Petition for Reconsideration filed by Dobson Communications Corp./Western Wireless Corp./Rural Cellular Corp. in WT Docket No. 01–14 on February 13, 2002 are granted, to the extent described above.

183. Pursuant to sections 4(i), 7, 303(c), 303(f), 303(g), 303(r), and 332 of the Communications Act of 1934, as amended, 47 U.S.C. 154(i), 157, 303(c), 303(f), 303(g), 303(r), and 332, the rule changes specified below are adopted. The rules will become effective February 14, 2005, except for § 1.919(c), which contains an information collection requirement that is not effective until approved by the Office of Management and Budget (OMB). The agency will publish a document in the **Federal Register** announcing the effective date of § 1.919(c).

184. The Commission's Consumer and Governmental Affairs Bureau, Reference Information Center, shall send a copy of the *Report and Order*, including the Final Regulatory Flexibility Analysis, to the Chief Counsel for Advocacy of the Small Business Administration.

List of Subjects

47 CFR Part 1

Administrative practice and procedure, Communications common carriers, Radio, Reporting and Recordkeeping requirements, Telecommunications.

47 CFR Part 22

Communications common carriers, Radio.

47 CFR Part 24

Personal communications services, Radio.

47 CFR Part 27

Wireless Communications Service.

47 CFR Part 90

Business and industry, Common carriers, Radio, Reporting and recordkeeping requirements.

Federal Communications Commission.

William F. Caton,

Deputy Secretary.

Rule Changes

■ For the reasons discussed in the preamble, the Federal Communications Commission amends 47 CFR parts 1, 22, 24, 27, and 90 as follows:

PART 1—PRACTICE AND PROCEDURE

■ 1. The authority citation for part 1 continues to read as follows:

Authority: 47 U.S.C. 151, 154(i), 154(j), 155, 225, 303(r), 309 and 325(e).

■ 2. Section 1.919 is amended by redesignating paragraphs (c), (d), and (e) as paragraphs (d), (e), and (f), and by adding a new paragraph (c) to read as follows:

§ 1.919 Ownership information.

* * * * *

(c) *Reporting of Cellular Cross-Ownership Interests.* (1) A cellular licensee of one channel block in a cellular geographic service area (CGSA) must report current ownership information if the licensee, a party that owns a controlling or otherwise attributable interest in the licensee, or a party that actually controls the licensee, obtains a direct or indirect ownership interest of more than 10 percent in a cellular licensee, a party that owns a controlling or otherwise attributable interest in a cellular licensee, or a party that actually controls a cellular licensee, for the other channel block in an overlapping CGSA, if the overlap is located in whole or in part in a Rural Service Area (RSA), as defined in § 22.909 of this chapter. The ownership information must be filed on a FCC Form 602 within 30 days of the date of consummation of the transaction and reflect the specific levels of investment.

(2) For the purposes of paragraph (c) of this section, the following definitions and other provisions shall apply:

(i) *Non-controlling interests.* A direct or indirect non-attributable interest in both systems is excluded from the reporting requirement set out in paragraph (c)(1) of this section.

(ii) *Ownership attribution.* For purposes of paragraph (c) of this section, ownership and other interests in cellular licensees will be attributed to their holders pursuant to the following criteria:

(A) Controlling interest shall be attributable. Controlling interest means majority voting equity ownership, any general partnership interest, or any means of actual working control (including negative control) over the operation of the licensee, in whatever manner exercised.

(B) Partnership and other ownership interests and any stock interest amounting to 20 percent or more of the equity, or outstanding stock, or outstanding voting stock of a cellular licensee shall be attributed.

(C) Non-voting stock shall be attributed as an interest in the issuing entity if in excess of the amounts set forth in paragraph (c)(2)(ii)(B) of this section.

(D) Debt and instruments such as warrants, convertible debentures, options, or other interests (except non-voting stock) with rights of conversion to voting interests shall not be attributed unless and until converted.

(E) Limited partnership interests shall be attributed to limited partners and shall be calculated according to both the percentage of equity paid in and the percentage of distribution of profits and losses.

(F) Officers and directors of a cellular licensee shall be considered to have an attributable interest in the entity with which they are so associated. The officers and directors of an entity that controls a cellular licensee shall be considered to have an attributable interest in the cellular licensee.

(G) Ownership interests that are held indirectly by any party through one or more intervening corporations will be determined by successive multiplication of the ownership percentages for each link in the vertical ownership chain and application of the relevant attribution benchmark to the resulting product, except that if the ownership percentage for an interest in any link in the chain exceeds 50 percent or represents actual control, it shall be treated as if it were a 100 percent interest. (For example, if A owns 20 percent of B, and B owns 40 percent of licensee C, then A's interest in licensee C would be 8 percent. If A owns 20 percent of B, and B owns 51 percent of licensee C, then A's interest in licensee C would be 20 percent because B's ownership of C exceeds 50 percent.)

(H) Any person who manages the operations of a cellular licensee pursuant to a management agreement shall be considered to have an attributable interest in such licensee if such person, or its affiliate, has authority to make decisions or otherwise engage in practices or activities that determine, or significantly influence:

(1) The nature or types of services offered by such licensee;

(2) The terms upon which such services are offered; or

(3) The prices charged for such services.

(I) Any licensee, or its affiliate, who enters into a joint marketing arrangements with a cellular licensee, or its affiliate, shall be considered to have an attributable interest, if such licensee or affiliate has authority to make decisions or otherwise engage in practices or activities that determine, or significantly influence:

(1) The nature or types of services offered by such licensee;

(2) The terms upon which such services are offered; or

(3) The prices charged for such services.

(3) *Sunset Provisions.* This notification requirement will sunset at the earlier of:

(i) Five years after February 14, 2005, or

(ii) At the cellular licensee's specific deadline for renewal.

* * * * *

PART 22—PUBLIC MOBILE SERVICES

■ 3. The authority citation for part 22 continues to read as follows:

Authority: 47 U.S.C. 154, 222, 303, 309 and 332.

■ 4. Section 22.702 is revised to read as follows:

§ 22.702 Eligibility.

Existing and proposed communications common carriers are eligible to hold authorizations to operate conventional central office, interoffice and rural stations in the Rural Radiotelephone Service. Subscribers are also eligible to hold authorizations to operate rural subscriber stations in the Rural Radiotelephone Service.

■ 5. Section 22.913 is amended by revising paragraph (a) to read as follows:

§ 22.913 Effective radiated power limits.

* * * * *

(a) *Maximum ERP.* In general, the effective radiated power (ERP) of base transmitters and cellular repeaters must not exceed 500 Watts. However, for those systems operating in areas more than 72 km (45 miles) from international borders that:

(1) Are located in counties with population densities of 100 persons or fewer per square mile, based upon the most recently available population statistics from the Bureau of the Census; or,

(2) Extend coverage on a secondary basis into cellular unserved areas, as those areas are defined in § 22.949, the ERP of base transmitters and cellular repeaters of such systems must not exceed 1000 Watts. The ERP of mobile transmitters and auxiliary test transmitters must not exceed 7 Watts.

* * * * *

§ 22.942 [Removed]

■ 6. Remove § 22.942.

PART 24—PERSONAL COMMUNICATIONS SERVICES

■ 7. The authority citation for part 24 continues to read as follows:

Authority: 47 U.S.C. 154, 301, 302, 303, 309 and 332.

■ 8. Section 24.203 is amended by revising paragraph (a) to read as follows:

§ 24.203 Construction requirements.

(a) Licensees of 30 MHz blocks must serve with a signal level sufficient to provide adequate service to at least one-third of the population in their licensed area within five years of being licensed and two-thirds of the population in their licensed area within ten years of being licensed. Licensees may, in the alternative, provide substantial service to their licensed area within the appropriate five- and ten-year benchmarks. Licensees may choose to define population using the 1990 census or the 2000 census. Failure by any licensee to meet these requirements will result in forfeiture or non-renewal of the license and the licensee will be ineligible to regain it.

* * * * *

■ 9. Section 24.232 is revised to read as follows:

§ 24.232 Power and antenna height limits.

(a) Base stations are limited to 1640 watts peak equivalent isotropically radiated power (EIRP) with an antenna height up to 300 meters HAAT, except as described in paragraph (b) of this section. *See* § 24.53 for HAAT calculation method. Base station antenna heights may exceed 300 meters with a corresponding reduction in power; *see* Table 1 of this section. In no case may the peak output power of a base station transmitter exceed 100 watts. The service area boundary limit and microwave protection criteria specified in § 24.236 and § 24.237 apply.

TABLE 1.—REDUCED POWER FOR BASE STATION ANTENNA HEIGHTS OVER 300 METERS

HAAT in meters	Maximum EIRP watts
≤300	1640
≤500	1070
≤1000	490
≤1500	270
≤2000	160

(b) Base stations that are located in counties with population densities of 100 persons or fewer per square mile, based upon the most recently available population statistics from the Bureau of the Census, are limited to 3280 watts peak equivalent isotropically radiated power (EIRP) with an antenna height up to 300 meters HAAT; *See* § 24.53 for HAAT calculation method. Base station antenna heights may exceed 300 meters with a corresponding reduction in power; *see* Table 2 of this section. In no case may the peak output power of a base station transmitter exceed 200 watts. The service area boundary limit and microwave protection criteria specified in § 24.236 and § 24.237 apply. Operation under this paragraph must be coordinated in advance with all PCS licensees within 120 kilometers (75 miles) of the base station and is limited to base stations located more than 120 kilometers (75 miles) from the Canadian border and more than 75 kilometers (45 miles) from the Mexican border.

TABLE 2.—REDUCED POWER FOR BASE STATION ANTENNA HEIGHTS OVER 300 METERS

HAAT in meters	Maximum EIRP watts
≤300	3280
≤500	2140
≤1000	980
≤1500	540
≤2000	320

(c) Mobile/portable stations are limited to 2 watts EIRP peak power and the equipment must employ means to limit the power to the minimum necessary for successful communications.

(d) Peak transmit power must be measured over any interval of continuous transmission using instrumentation calibrated in terms of an rms-equivalent voltage. The measurement results shall be properly adjusted for any instrument limitations, such as detector response times, limited resolution bandwidth capability when compared to the emission bandwidth, sensitivity, etc., so as to obtain a true peak measurement for the emission in question over the full bandwidth of the channel.

■ 10. Section 24.237 is amended by revising paragraph (d) to read as follows:

§ 24.237 Interference protection.

* * * * *

(d) The licensee must perform an engineering analysis to assure that the proposed facilities will not cause interference to existing OFS stations within the coordination distance specified in Table 3 of a magnitude greater than that specified in the criteria set forth in paragraphs (e) and (f) of this section, unless there is prior agreement with the affected OFS licensee. Interference calculations shall be based on the sum of the power received at the terminals of each microwave receiver from all of the applicant's current and proposed PCS operations.

TABLE 3.—COORDINATION DISTANCES IN KILOMETERS

	PCS Base Station Antenna HAAT in Meters												
EIRP(W)	5	10	20	50	100	150	200	250	300	500	1000	1500	2000
0.1	90	93	99	110	122	131	139	146	152	173	210	239	263
0.5	96	100	105	116	128	137	145	152	158	179	216	245	269
1	99	103	108	119	131	140	148	155	161	182	219	248	272
2	120	122	126	133	142	148	154	159	164	184	222	250	274
5	154	157	161	168	177	183	189	194	198	213	241	263	282

TABLE 3.—COORDINATION DISTANCES IN KILOMETERS—Continued

	PCS Base Station Antenna HAAT in Meters												
EIRP(W)	5	10	20	50	100	150	200	250	300	500	1000	1500	2000
10	180	183	187	194	203	210	215	220	225	240	268	291	310
20	206	209	213	221	229	236	242	247	251	267	296	318	337
50	241	244	248	255	264	271	277	282	287	302	331	354	374
100	267	270	274	282	291	297	303	308	313	329	358	382	401
200	293	296	300	308	317	324	330	335	340	356	386	409	436
500	328	331	335	343	352	359	365	370	375	391	421	440	
1000	354	357	361	369	378	385	391	397	402	418			
1200	361	364	368	376	385	392	398	404	409	425			
1640	372	375	379	388	397	404	410	416	421	437			
2400	384	387	391	399	408	415	423	427	431				
3280	396	399	403	412	419	427	435	439	446				

* * * * *

PART 27—MISCELLANEOUS WIRELESS COMMUNICATIONS SERVICES

■ 11. The authority citation for part 27 continues to read as follows:

Authority: 47 U.S.C. 154, 301, 302, 303, 307, 309, 332, 336, and 337 unless otherwise noted.

■ 12. Section 27.50 is amended by revising paragraph (d) to read as follows:

§ 27.50 Power and antenna height limits.

* * * * *

(d) The following power and antenna height requirements apply to stations transmitting in the 1710–1755 MHz and 2110–2155 MHz bands:

(1) The power of each fixed or base station transmitting in the 2110–2155 MHz band and located in any county with population density of 100 or fewer persons per square mile, based upon the most recently available population statistics from the Bureau of the Census, is limited to a peak equivalent isotropically radiated power (EIRP) of 3280 watts and a peak transmitter output power of 200 watts. The power of each fixed or base station transmitting in the 2110–2155 MHz band from any other location is limited to a peak EIRP of 1640 watts and a peak transmitter output power of 100 watts. A licensee operating a base or fixed station utilizing a power of more than 1640 watts EIRP must coordinate such operations in advance with all Government and non-Government satellite entities in the 2025–2110 MHz band. Operations above 1640 watts EIRP must also be coordinated in advance with the following licensees within 120 kilometers (75 miles) of the base or fixed station: all Multipoint Distribution Service (MDS) licensees authorized under Part 21 in the 2155–2160 MHz band and all AWS licensees in the 2110–2155 MHz band.

(2) Fixed, mobile, and portable (hand-held) stations operating in the 1710–1755 MHz band are limited to a peak EIRP of 1 watt. Fixed stations operating in this band are limited to a maximum antenna height of 10 meters above ground, and mobile and portable stations must employ a means for limiting power to the minimum necessary for successful communications.

* * * * *

PART 90—PRIVATE LAND MOBILE RADIO SERVICES

■ 13. The authority citation for part 90 continues to read as follows:

Authority: 47 U.S.C. 4(i), 11, 303(g), 303(r), and 332(c)(7) of the Communications Act of 1934, as amended.

■ 14. Section 90.155 is amended by revising paragraph (d) to read as follows:

§ 90.155 Time in which station must be placed in operation.

* * * * *

(d) Multilateration LMS EA-licensees, authorized in accordance with § 90.353, must construct and place in operation a sufficient number of base stations that utilize multilateration technology (*see* paragraph (e) of this section) to provide multilateration location service to one-third of the EA's population within five years of initial license grant, and two-thirds of the population within ten years. Licensees may, in the alternative, provide substantial service to their licensed area within the appropriate five- and ten-year benchmarks. In demonstrating compliance with the construction and coverage requirements, the Commission will allow licensees to individually determine an appropriate field strength for reliable service, taking into account the technologies employed in their system design and other relevant technical factors. At the five- and ten-year benchmarks, licensees will be required to file a map and FCC Form 601 showing compliance with the coverage requirements (*see* § 1.946 of this chapter).

* * * * *

■ 15. Section 90.685 is amended by revising paragraph (b) to read as follows:

§ 90.685 Authorization, construction and implementation of EA licenses.

* * * * *

(b) EA licensees in the 806–821/851–866 MHz band must, within three years of the grant of their initial license, construct and place into operation a sufficient number of base stations to provide coverage to at least one-third of the population of its EA-based service area. Further, each EA licensee must provide coverage to at least two-thirds of the population of the EA-based service area within five years of the grant of their initial license. EA-based licensees may, in the alternative, provide substantial service to their markets within five years of the grant of their initial license. Substantial service shall be defined as: ''Service which is sound, favorable, and substantially above a level of mediocre service.''

* * * * *

■ 16. Section 90.767 is revised to read as follows:

§ 90.767 Construction and implementation of EA and Regional licenses.

(a) An EA or Regional licensee must construct a sufficient number of base stations (*i.e.*, base stations for land mobile and/or paging operations) to provide coverage to at least one-third of the population of its EA or REAG within five years of the issuance of its initial license and at least two-thirds of the population of its EA or REAG within ten years of the issuance of its initial license. Licensees may, in the alternative, provide substantial service to their licensed areas at the appropriate five- and ten-year benchmarks.

(b) Licensees must notify the Commission in accordance with § 1.946

of this chapter of compliance with the Construction requirements of paragraph (a) of this section.

(c) Failure by an EA or Regional licensee to meet the construction requirements of paragraph (a) of this section, as applicable, will result in automatic cancellation of its entire EA or Regional license. In such instances, EA or Regional licenses will not be converted to individual, site-by-site authorizations for already constructed stations.

(d) EA and Regional licensees will not be permitted to count the resale of the services of other providers in their EA or REAG, *e.g.*, incumbent, Phase I licensees, to meet the construction requirement of paragraph (a) of this section, as applicable.

(e) EA and Regional licensees will not be required to construct and place in operation, or commence service on, all of their authorized channels at all of their base stations or fixed stations.

■ 17. Section 90.769 is revised to read as follows:

§ 90.769 Construction and implementation of Phase II nationwide licenses.

(a) A nationwide licensee must construct a sufficient number of base stations (*i.e.*, base stations for land mobile and/or paging operations) to provide coverage to a composite area of at least 750,000 square kilometers or 37.5 percent of the United States population within five years of the issuance of its initial license and a composite area of at least 1,500,000 square kilometers or 75 percent of the United States population within ten years of the issuance of its initial license. Licensees may, in the alternative, provide substantial service to their licensed areas at the appropriate five- and ten-year benchmarks.

(b) Licensees must notify the Commission in accordance with § 1.946 of this chapter of compliance with the Construction requirements of paragraph (a) of this section.

(c) Failure by a nationwide licensee to meet the construction requirements of paragraph (a) of this section, as applicable, will result in automatic cancellation of its entire nationwide license. In such instances, nationwide licenses will not be converted to individual, site-by-site authorizations for already constructed stations.

(d) Nationwide licensees will not be required to construct and place in operation, or commence service on, all of their authorized channels at all of their base stations or fixed stations.

[FR Doc. 04–27049 Filed 12–14–04; 8:45 am]

BILLING CODE 6712–01–P

FEDERAL COMMUNICATIONS COMMISSION

47 CFR Parts 1, 22, 24, 27, and 90

[WT Docket Nos. 02–381, 01–14, 03–202; FCC 04–166]

Facilitating the Provision of Spectrum-Based Services to Rural Areas and Promoting Opportunities for Rural Telephone Companies To Provide Spectrum-Based Services

AGENCY: Federal Communications Commission.

ACTION: Proposed rule.

SUMMARY: In this document, the Federal Communications Commission (Commission) examines ways of amending its spectrum regulations and policies to promote the more rapid and efficient deployment of quality spectrum-based services in rural areas. In particular, the Commission seeks to expand upon the record in this proceeding by identifying additional measures that it can take to promote access to spectrum in rural areas. The Commission seeks additional comment on adopting an unserved-area or ''keep what you use'' re-licensing process for current and future wireless services and asks whether such measures are likely to spur the delivery of wireless services to rural areas. This document also inquires whether additional performance requirements might be appropriate for license terms subsequent to initial renewal to encourage the deployment of quality spectrum-based service in rural areas.

DATES: Comments due: January 14, 2005. Reply Comments Due: February 14, 2005.

FOR FURTHER INFORMATION CONTACT: Allen A. Barna, Wireless Telecommunications Bureau, at (202) 418–0620, or via the Internet at *Allen.Barna@fcc.gov.*

For additional information concerning the Paperwork Reduction Act information collection requirements contained in this document, contact Judith B. Herman at 202–418–0214, or via the Internet at *Judith-B.Herman@fcc.gov.*

SUPPLEMENTARY INFORMATION: This is a summary of the Further Notice of Proposed Rulemaking portion (*Rural Further Notice*) of the Commission's Report and Order and Further Notice of Proposed Rulemaking FCC 04–166, in WT Docket Nos. 02–381, 01–14, and 03–202, adopted July 8, 2004, and released September 27, 2004. Contemporaneous with this document, the Commission publishes the Report and Order and order on reconsideration portion (*Report and Order*) (summarized elsewhere in this publication). The full text of this document is available for public inspection and copying during regular business hours at the FCC Reference Information Center, 445 12th St., SW., Room CY–A257, Washington, DC 20554. The complete text may be purchased from the Commission's duplicating contractor: Best Copy & Printing, Inc., 445 12th Street, SW., Room CY–B402, Washington, DC, 20554, telephone 800–378–3160, facsimile 202–488–5563, or via e-mail at *fcc@bcpiweb.com.* The full text may also be downloaded at: *http://www.fcc.gov.* Alternative formats are available to persons with disabilities by contacting Brian Millin at (202) 418–7426 or TTY (202) 418–7365 or at *Brian.Millin@fcc.gov.*

Synopsis of the Further Notice of Proposed Rulemaking

I. Introduction

1. In this *Further NPRM,* the widespread provision of communications services is not only one of the Commission's primary public policy objectives, but also one of its statutory mandates. Our primary mission is to promote ''communication by wire and radio so as to make available, so far as possible, to all the people of the United States, without discrimination on the basis of race, color, religion, national origin, or sex, a rapid, efficient, Nation-wide, and world-wide wire and radio communication service.'' In addition, the Omnibus Budget Reconciliation Act of 1993 added section 309(j) to the Communications Act, which requires the Commission to promote various objectives in designing a system of competitive bidding. A number of these objectives focus on the provision of spectrum-based services to rural areas, such as encouraging the development and rapid deployment of new technologies, products, and services for the benefit of the public, ''including those residing in rural areas.'' In addition to the rural service objectives mandated by section 309(j), Congress directed the Commission to pursue other broader public interest goals. Specifically, section 309(j)(3) requires the Commission to promote efficient and intensive use of the spectrum, encourage economic opportunity and competition, and recover for the public a portion of the value of the public spectrum. Given these statutory obligations, the Commission's spectrum policy goals include facilitating the efficient use of spectrum, as well as fostering competition, and rapid, widespread service consistent with the goals of the Communications Act. In this proceeding, we released a Notice of Inquiry (*Rural NOI*) in December of 2002, 68 FR 723 (January 7, 2003), and, in October 2003, we released our initial Notice of Proposed Rulemaking (*Rural NPRM*), 68 FR 64050 (November 12, 2003).

2. As noted in the *Report and Order,* our current policies and rules generally facilitate rural development of wireless services where it is economic to do so. The competitive bidding process and related performance and other requirements for successful bidders, including existing substantial service and flexible use policies, encourage licensees to make productive and innovative use of spectrum. In addition, our secondary market mechanisms provide on-going opportunities for new entrants to gain access to spectrum from those licensees as market conditions change, thereby ensuring that spectrum moves to its highest valued uses over time. We believe that, insofar as they have economic incentives to do so, new wireless service providers will choose to enter rural markets and existing rural service providers will extend their presence further into the rural areas where they operate.

3. As we acknowledge in the *Report and Order,* however, there may be circumstances in which our market-oriented policies are insufficient to foster access to spectrum and deployment of service in rural areas. In such cases, we will continue to consider the adoption of appropriate performance requirements, along with other means, for both existing and future licenses to further encourage the provision of wireless service to rural areas. Accordingly, in this Further Notice, we build on the record accumulated in response to the *Rural NPRM* and we seek comment on the appropriate mechanisms to further ensure that spectrum ultimately continues to be put to its highest valued use. In particular, we seek additional comment on the effectiveness of our partitioning, disaggregation, spectrum leasing and other market-based policies and rules in making wireless services available to more rural areas. We also seek comment on our potential use of ''keep-what-you-use'' re-licensing mechanisms, renewal term substantial service requirements, as well as other alternatives to move unused or underused spectrum to those who may be able to use it more intensively. We also seek comment on the economic impacts of employing such approaches and whether different services may benefit from different

approaches to expanded spectrum access.

4. As noted above, service to rural areas may be delayed because entities that are otherwise willing and able to deploy service lack access to spectrum. The increasing use of unlicensed wireless technologies and applications in rural areas suggests that operators will deploy service if there is availability of or access to spectrum with which to do so. Accordingly, we undertake this further inquiry to assess alternative methods that will ensure that spectrum rights flow to those who are willing and able to put spectrum to use in rural areas.

5. In this *Rural Further Notice,* we seek to explore whether changing our method for enforcing performance requirements or adding renewal term performance requirements could have a beneficial impact on the deployment of wireless service to rural areas. In this regard, this section examines how the licensing of wireless services has evolved from a ''keep what you use'' standard to a ''complete forfeiture'' approach. The following paragraphs provide an overview of the development of licensing models and performance standards, while also providing the Commission's rationale behind these policy shifts.

II. Background

6. *Site-by-site Construction.* Initially, the Commission licensed mobile and fixed wireless services on a site-by-site and frequency-by-frequency basis. Licensees were authorized to operate a station only at a specific location, using a specific frequency or frequencies. Some examples of this type of licensing approach include one or more base stations with mobile units in the vicinity, or a fixed communications path between two points. With this type of site-specific licensing, the Commission adopted a ''keep what you use'' performance requirement, meaning that at the end of a licensee's construction period, any unconstructed areas or frequencies came back under Commission control for re-licensing on a first-come, first served (often pre-coordinated) site-by-site basis. In this regard, the Commission sought to ensure timely use of spectrum and ''to ensure that the channels which we make available to eligibles are put in 'use' and not put in 'storage.' ''

7. For example, the Commission's original rules governing 800 MHz SMR were designed to license dispatch radio systems on a transmitter-by-transmitter basis in local markets. The Commission typically gave an 800 MHz SMR licensee up to 12 months after the grant of a license to construct and begin operation of its facilities, meaning that each licensed site and frequency had to be up and running within one year. At the end of that time period, licensed areas and frequencies that were unconstructed reverted back to the Commission for re-licensing.

8. Hybrid Licensing. As technology evolved, mobile wireless providers sought to expand their reach and to provide service over a wide area. Two different approaches of ''wide-area'' licensing developed in response to increasing demand for new services: the SMR model and the cellular model. While these approaches permitted SMR and cellular carriers to operate within a wide-area footprint, the Commission's site-specific licensing rules and ''keep what you use'' policy still applied.

9. For example, responding to growing demand for mobile telephony and limited capacity, SMR licensees sought to operate technically innovative, wide-area systems. Because of the complexity and expense of building these systems, however, licensees were frequently unable to provision service within the 8 to 12 month time frame required by Commission rules. Beginning in 1991, the Commission granted waivers and extended implementation authority to many SMR licensees, giving them authority to expand the geographic scope of their services and combine large numbers of channels in order to provide service intended to compete with cellular. Applicants who were granted waivers or extended implementation authority received additional time to construct the licensed spectrum. However, applicants still had to apply for each site individually and in the event the licensee did not construct and operate the frequencies within the extended time period, the unused spectrum came back under Commission control for re-licensing.

10. In contrast, wide-area licensing for the cellular radiotelephone service followed a different path. In establishing commercial licensing of cellular in 1981, the Commission recognized the need to define cellular service areas while also providing authorized cellular operators with the freedom they needed to adapt their systems in the face of growing and changing demand. The Commission established a regulatory structure centered on cellular geographic service areas (CGSAs) that would be defined by license applicants themselves as the areas within a market that they intended to serve. An applicant was required to serve at least 75 percent of its CGSA. The Commission soon after added an additional rule, requiring applicants to define their CGSAs to cover at least 75 percent of the population or area of the corresponding MSA or RSA. Carriers operating in MSAs were required to place their cellular stations into operation within 36 months of the initial license grant, while operators in RSAs had 18 months to construct. In addition, the Commission afforded licensees a five-year ''fill-in'' period in which a licensee could apply to expand the boundaries of its CGSA within the MSA/RSA without the worry of competing interests from another applicant.

11. As the popularity of cellular service began to grow, the Commission determined that it was not in the public interest to allow a cellular licensee to protect unserved territory for an unlimited period of time simply because the territory was part of its CGSA. The Commission, therefore, imposed a ''keep-what-you-use'' regime on all cellular licenses, and established rules and procedures for accepting applications to operate new cellular systems in areas still unserved at the expiration of the incumbent's five-year ''fill-in'' period. In addition, the Commission adopted rules determining the size of CGSAs by a mathematical formula and redefined the boundaries authorized for existing cellular systems to more closely mirror the areas of actual construction and coverage so that potential licensees for the cellular unserved areas would have a clearer picture of which areas were available. At the end of the five year ''fill-in'' period, any unused spectrum reverted back to the Commission for re-licensing. New licenses authorized as a result of the unserved area licensing rules are licensed on a site-specific basis, and licensees are required to complete construction and provide service to the public within one year of the initial authorization grant.

12. Geographic Area-based Approach. While the hybrid licensing models did help to expand wireless service, problems remained. For example, even with waivers and grants of extended implementation authority developed in the hybrid licensing model, the SMR licensing process remained cumbersome because of the requirement that SMR sites and frequencies be licensed individually. The Commission noted specifically that site-by-site licensing deprives licensees of flexibility to move transmitter sites throughout a defined service area without seeking the Commission's prior approval.'' In order to provide wireless licensees with needed flexibility, therefore, the Commission adopted a system of

geographic-area licensing with minimum coverage requirements based on population or geography. At the same time, the Commission transitioned from the ''keep what you use'' licensing policy to a ''complete forfeiture'' approach, which made licenses subject to automatic cancellation for failure to meet interim coverage requirements at specified benchmarks. Failure to meet applicable performance benchmarks would result in complete loss of the license, even in areas where construction had already been completed.

13. The Commission first applied geographic area licensing and a ''complete forfeiture'' performance standard when it established the narrowband and broadband PCS services. In order to permit the widest possible range of mobile communications, the Commission put in place technical standards that would permit significant flexibility in both the design and implementation of PCS systems as well as geographic- and population-based construction benchmarks that would ensure that licensees built out their systems or face forfeiture of their licenses. The Commission concluded that these and other changes to its licensing approach would encourage diversity of technologies and speed deployment of service. In addition, in 2000, the Commission adopted ''substantial service'' as an alternative construction requirement for PCS licensees. As noted, under the ''complete forfeiture'' approach, failure to meet these benchmarks results in automatic cancellation or non-renewal of the entire PCS license, including the rights to operate from any facilities already constructed under the authorization.

14. The Commission also applied geographic area licensing to existing services, such as SMR. The Commission sought to institute policies that would afford wide-area SMR system licensees opportunities to bid on new licenses that offered the same flexibility as cellular and PCS licenses in terms of facility location, design, construction, and modification. Therefore, the Commission designated the upper 200 channels of 800 MHz SMR spectrum for geographic-area licensing based on EAs, and overlayed geographic markets over existing site-based systems. The Commission granted licensees the authority to construct base stations at any available site and on any available channel within their spectrum blocks so long as previously existing site-based facilities are provided appropriate interference protection. Using the ''complete forfeiture'' approach, the Commission also instituted minimum coverage and channel use requirements at three- and five-year benchmarks. Two years later, in 1997, the Commission adopted geographic-area licensing with EA service areas for the lower 230 800 MHz channels as well, stating that geographic area licensing remains the most efficient and logical licensing approach for the majority of licensees in the band. The Commission adopted construction requirements similar to the upper channels, but eliminated the channel usage requirement and also adopted an alternative plan whereby licensees in the lower 230 channels can satisfy coverage obligations by providing substantial service within five years of license.

15. In recent years, the Commission has continued to embrace geographic area licensing and moved towards the adoption of more flexible construction requirements, such as substantial service. This shift has occurred in order to provide flexibility for licensees seeking to provide a variety of services with their spectrum, not all of which require pervasive geographic coverage, as well as to accommodate licenses encompassing very large service areas as opposed to smaller site-based licenses. In keeping with its goal of flexibility for licensees, the Commission has also adopted substantial service as the sole standard, or as an alternate standard, for many services. For example, LMDS, 39 GHz and 24 GHz microwave services all have the sole construction requirement of providing substantial service by the end of the initial license term. As discussed earlier, the Commission's increasing movement towards substantial service as an alternative means of meeting construction requirements has been met with mixed reactions. Based on this difference of opinion between commenters, we seek further comment in the paragraphs below as to the appropriate performance standards to apply.

16. We note that regardless of the type of requirement, our current performance requirements apply only during the initial term. As noted, once a licensee renews its license, no additional performance requirements are imposed in subsequent terms other than the standard necessary in order to achieve a renewal expectancy. In the case of renewals, if an incumbent files an appropriate and timely application and neither the public nor the Commission objects, the license will typically be renewed for another term. However, if another party objects or files a competing application, a licensee must demonstrate that it is entitled to a renewal expectancy. A renewal applicant involved in a comparative renewal proceeding will acquire a renewal expectancy if the applicant provides sufficient evidence that the applicant has provided substantial service during its license term, and that the applicant has substantially complied with the Communications Act, as well as with all applicable Commission rules and policies. As a general matter, if a renewal applicant satisfies these requirements, the applicant will be granted a renewal expectancy and other competing applications will be dismissed.

III. Further Notice of Proposed Rulemaking

A. Existing Market-Based Models

17. The Commission's rules and policies provide interested parties with several market-based vehicles for obtaining access to licensed spectrum through the secondary market. First, an interested party may obtain a license through the assignment and transfer of control process, pursuant to Commission review and approval under section 310(d) of the Communications Act. Furthermore, by utilizing the partitioning and disaggregation process, parties need not buy a license ''as is—instead, parties may obtain licenses for a particular subset of frequencies and carve out certain geographic areas that satisfy their unique needs, while the original licensee retains the remaining frequencies and geographic areas. Second, parties may utilize the spectrum leasing process—further enabled under the Commission's secondary markets proceeding—to engage in short- and long-term leases. Based upon the record developed in response to the *Rural NPRM,* we are hopeful that these measures will provide effective means of providing access to spectrum through the secondary market. As discussed below, however, it appears that there are ways in which these mechanisms nevertheless may not satisfy the needs of some parties; in the following paragraph, we identify some of the key concerns with these mechanisms, as reflected in the record, and seek additional comment on the efficacy of these procedures in providing access to spectrum in rural areas.

18. As an initial matter, we observe that the record reflects some disagreement with respect to the effectiveness of our partitioning and disaggregation policies in providing access to spectrum in rural areas. On the one hand, the record provides information on partitioning and disaggregation transactions that suggest

these policies are working. On the other hand, the record also shows that some rural carriers may not be receiving the benefits of partitioning and disaggregation. According to commenter, the problems with partitioning and disaggregation are multi-fold: (1) The Commission's rules do not provide licensees with an incentive to 'carve out' portions of their license areas for rural carriers; (2) the administrative costs of entering into and managing the partitioning/disaggregation process outweigh the realized financial gains; (3) and licensees wish to retain the entire geographic area when they go to sell the system as a whole in the future, because licensees perceive that unpartitioned licenses will have a higher resale value. Another commenter echoes these concerns, stating that large national and regional carriers that control licenses for most of the spectrum are not willing or able to devote the time and resources necessary to negotiate and implement arrangements on the scale desired by rural telephone companies.

19. In order to identify the specific nature and extent to which our partitioning and disaggregation rules are working, we seek additional comment on specific partitioning and disaggregation transactions, as well as the negotiations process. We seek to develop a more comprehensive understanding of the ways in which this process may be insufficient to promote access to spectrum. Given the conflicting record regarding the ability of carriers to engage in smaller-scale partitioning and disaggregation transactions, we believe that additional information, particularly specific transaction data, will facilitate our greater understanding of the benefits and shortfalls of our partitioning and disaggregation policies in fostering access to spectrum in rural areas. We also seek comment on how these policies may work in coordination with potential re-licensing mechanisms such as ''keep what you use,'' as discussed in greater detail below. We note that certain commenters proposed various incentives for licensees to engage in partitioning and disaggregation, including the provision of bidding credits for auction winners that commit to partitioning portions of their licenses to rural carriers, monetary credits towards a future spectrum auction in exchange for the return of unused spectrum, and credits towards licensees' construction obligations. We ask for comment on these proposals and also seek comment on additional incentives that are likely to encourage partitioning and disaggregation in rural areas.

20. In addition to the partitioning and disaggregation process, the Commission's rules also facilitate access to spectrum on the secondary market through spectrum leasing. Because our rules further enabling spectrum leasing went into effect on January 24, 2004, we are not yet in a position to evaluate the effectiveness of spectrum leasing in providing access to spectrum in rural areas. Nevertheless, we are encouraged by the record that interested parties will take advantage of our spectrum leasing rules to obtain access to previously ''unused'' spectrum and provide innovative and new service offerings to the public. Indeed, based upon preliminary information regarding proposed spectrum leasing transactions, we are optimistic that our spectrum leasing rules are affording many new opportunities for access to spectrum, including spectrum in rural areas.

21. While the record in response to the *Rural NPRM* indicates that many commenters are optimistic that our spectrum leasing will promote the deployment of wireless services to rural areas and therefore urge the Commission to ''wait and see'' how secondary markets develop prior to taking any regulatory action to encourage spectrum access, others indicate concern that this market-based mechanism will be an insufficient means of providing spectrum access. Accordingly, we seek additional comment on how spectrum leasing is addressing concerns about access to spectrum, particularly from those who have entered into, or are contemplating, such transactions. In particular, we seek comment regarding situations where parties' need for spectrum have been accommodated by spectrum leasing as well as situations where those needs may not have been satisfied by the availability of such leasing.

B. ''Keep What You Use'' Re-licensing Measures

22. Based upon the record developed in this proceeding, as well as available data on partitioning and disaggregation transactions and preliminary information on spectrum leasing agreements, we believe that our current policies and regulations are working to promote access to ''unused'' spectrum. Nevertheless, the record also suggests that, for a variety of reasons, there may be instances where these market-based policies may not be adequate to promote access to spectrum in rural areas. As we have already indicated, the rapid provision of broadband and other wireless services to rural areas is of critical importance in accomplishing our statutory and public policy objectives. Accordingly, if we determine that our current policies are insufficient to increase access to spectrum, we may take additional measures to ensure that unused spectrum moves into the hands of those who stand ready and willing to deploy wireless voice and data services to rural Americans.

23. Based upon the record received in response to the *Rural NPRM*, commenters indicate that extending the ''keep what you use'' to additional wireless services may provide a variety of benefits. For those services that otherwise would be subject to a ''complete forfeiture'' approach, a ''keep what you use'' approach might also have the benefit of allowing future licensees in those services to keep certain portions of their licenses rather than forfeiting the entire license for failure to satisfy certain benchmarks.

24. We also recognize, however, that adopting a ''keep what you use'' approach may yield certain unintended and potentially detrimental consequences, as asserted by a number of commenters. As an initial matter, commenters suggest that adopting a ''keep what you use'' approach may not actually result in additional rural deployment, because, if it is economically beneficial for a carrier to deploy services in a particular area, they have sufficient incentive to do so without regulatory intervention. Second, commenters caution that adopting a ''keep what you use'' approach may upset the valuation of spectrum licenses and chill investment in wireless services. Third, such an approach might result in uneconomic construction, in an attempt to ''save'' licensed area. Fourth, adopting the ''keep what you use'' approach may result in numerous administrative and legal costs, including the costs of initially assessing whether the spectrum is being ''used,'' reclaiming the subject spectrum and resolving ''any controversy or litigation that may arise as a result,'' engaging in the re-licensing process, and ''waiting to see whether the new licensees actually provide the desired wireless service to the indicated rural territory.'' Finally, carriers express concern that adopting a ''keep what you use'' approach may strip a licensee of legitimate business opportunities, such as the ability to lease excess spectrum in the secondary market.

25. Given the potential benefits and drawbacks of the ''keep what you use'' approach, we intend to continue to examine carefully the potential use of this mechanism to increase access to spectrum in this proceeding as well as

in future service-specific proceedings. In the *Rural NPRM*, the Commission limited its inquiry regarding spectrum re-licensing and adoption of the ''keep what you use'' approach to future spectrum allocations only. In this *Rural Further Notice,* however, we extend our inquiry to include all licensed terrestrial wireless services that are within the scope of this proceeding, as well as future spectrum allocations. Accordingly, we see comment on the benefits, if any, of extending the ''keep what you use'' approach. We ask whether the potential benefits of the ''keep what you use'' approach, in terms of increasing access to spectrum in rural areas, are likely to outweigh the potential costs. In this regard, commenters are asked to discuss the likelihood that such an approach will in fact cause uneconomic construction. We note that, to the extent that any construction requirement will cause a licensee to deploy facilities in a manner in which it may not otherwise have in the absence of such a rule, any build-out obligation could to some extent be said to cause uneconomic investment or construction. Accordingly, we seek comment on whether a ''keep what you use'' approach will cause undue disruption or whether it should more appropriately be viewed as one of many factors to be considered by a licensee in determining whether or not to deploy facilities in a given area.

26. We also seek comment on the impact of such a re-licensing approach on secondary markets. Because licensees may wish to recoup some financial benefit from their unused spectrum, rather than simply allowing it to revert to the Commission, a ''keep what you use'' approach would seem to encourage licensees to engage in more partitioning, disaggregation, and spectrum licensing arrangements. For these reasons, adoption of a ''keep what you use'' approach might well complement our existing market-based policies. On the other hand, we note that certain commenters caution that a ''keep what you use'' approach to spectrum re-licensing could eliminate long range benefits from the Commission's positive steps taken to foster development of a secondary market in spectrum. We seek clarification on the potential impact of a ''keep what you use'' approach on our secondary market policies.

27. We acknowledge that any ''keep what you use'' approach would necessitate certain important administrative determinations, such as identifying what constitutes ''use'' for particular services and requiring licensees to demonstrate sufficient ''use.'' However, we do not intend to set out a comprehensive definition of spectrum ''use'' in this proceeding. Should we adopt a ''keep what you use'' approach, we will examine the definition of ''use'' and other administrative issues in future service-specific proceedings.

C. Renewal Term Substantial Service Requirements

28. We also seek comment on whether we should strengthen the application of substantial service performance requirements after initial license terms as a means of encouraging access to spectrum and provision of service in rural areas. *The Report and Order* provided most geographic area licensees with the option of satisfying a substantial service standard if they did not already have such an option. As discussed in the *Report and Order*, the unique characteristics and considerations inherent in constructing within rural areas may make it impractical for licensees with population-based build-out requirements to construct in such areas. We believe that enabling licensees to fulfill their construction obligations by providing substantial service affords them the flexibility to deploy facilities in sparsely populated areas that otherwise may not be served. Indeed, the record in this proceeding supports our belief that the substantial service requirement enhances licensee ability to bring service to rural areas.

29. We therefore seek comment on the viability of more rigorous substantial service construction requirements for licenses beyond their initial license terms. Given our interest in ensuring that spectrum is available to those who actively seek to deploy facilities, we ask if such a measure would promote access to spectrum and expanded service in sparsely populated areas. We also ask how best to structure any new substantial service requirements for use in renewal license terms that will expand coverage in rural areas. For example, should we require the provision of additional coverage beyond that which is sufficient to satisfy the existing substantial service standard during the initial license term? In other words, is it reasonable to expect a carrier to expand its coverage over time and therefore impose an increasing substantial service requirement? If so, we ask commenters to explain how best to formulate such standards to provide both existing and prospective licensees with flexibility to develop or revise their long-term business plans and build-out strategies but also with sufficient clarity for them to understand what needs to be accomplished and by what date. In addition, we ask commenters to describe any safe harbor provisions that would facilitate compliance or explain why the adoption of a safe harbor for that particular standard would not be appropriate. In addition, given our desire to encourage the deployment of service in rural areas, should we require licensees to demonstrate that some percentage of the rural population of its licensed areas is being covered in order to satisfy its substantial service showing whether or not a competing application is filed against a renewal application? Recognizing the reservations of some to the imposition of performance requirements during renewal license terms, we also seek comment on any disadvantages that might accrue if we were to strengthen substantial service performance after initial terms.

D. Other Alternatives

30. We ask commenters to identify any other methods we might adopt to make unused spectrum available to those better positioned to deploy service in the event our market-based policies fail to do so. For example, as stated earlier, although we believe it is premature at this time to adopt the use of easements, we will continue to consider the potential impact of easements on the incentives of all parties to ensure the highest and best use of the band. Comments in this proceeding provided mixed views on such use. One commenter generally supports such easements provided they permit, but do not require, licensees to allow the operation of unlicensed devices on their networks. However, others submit that such easements or underlays for the provision of unlicensed services should not be permitted because they believe that unlicensed overlays will interfere with the Commission's secondary market policies, would create uncertainty regarding a licensee's spectrum rights, as well as raise interference concerns. We, nevertheless, remain interested in the role that easements or other authorized secondary uses could play in providing incentives for the development by third parties of new devices and services that will increase access to spectrum, such as software-defined radios and other frequency-agile devices in frequency bands that are otherwise currently restricted to exclusive license holders. Such ability to take advantage of unused portions of licensed spectrum could lead to the development of more equipment at lower costs, a key barrier to entry in rural areas. Nonetheless, we also seek to afford license holders as much

reliability in their spectrum usage rights as practicable. In light of the objections of some to the possible use of easements, we ask commenters to clarify their objections and, where possible, provide examples of potential adverse consequences. Should we choose to use such easements, we ask, first, how they could be structured to increase spectrum access and service coverage while also addressing the concerns raised in the comments. Second, after what time period should we allow entities to employ such easements, e.g., immediately after renewal if a certain standard was not met during the initial term, or at some other point?

31. Finally, because we recognize that different wireless services may benefit from different approaches to spectrum access, we ask commenters to identify the specific services to which their proposed approaches should apply and whether there are any services that should be excluded. For example, how should the re-licensing methodologies available for mobile wireless services be different than those for fixed services? Should different approaches be applied to different geographic markets, *i.e.* is it appropriate to apply the same re-licensing method for a nationwide license as well as a MTA-based license?

IV. Procedural Matters

A. Ex Parte Rules—Permit-But-Disclose Proceeding

32. This is a permit-but-disclose notice and comment rule making proceeding. Ex parte presentations are permitted, except during the Sunshine Agenda period, provided they are disclosed as provided in Commission rules.

B. Initial Regulatory Flexibility Analysis

1. Introduction

33. As required by the Regulatory Flexibility Act of 1980, as amended (RFA), the Commission has prepared this present Initial Regulatory Flexibility Analysis (IRFA) of the possible significant economic impact on a substantial number of small entities by the policies and rules proposed in this Further Notice of Proposed Rulemaking (Further Notice). Written public comments are requested on this IRFA. Comments must be identified as responses to the IRFA and must be filed by the deadlines for comments on the Further Notice provided in paragraph 183 of the item. The Commission will send a copy of the Further Notice, including this IRFA, to the Chief Counsel for Advocacy of the Small Business Administration (SBA). In addition, the Further Notice and IRFA (or summaries thereof) will be published in the **Federal Register**.

2. Need for, and Objectives of, the Proposed Rules

34. In this *Rural Further Notice,* the Commission seeks to expand upon the record received in response to the *Rural NPRM,* with respect to additional measures that the Commission can take in order to promote the further expansion of spectrum-based services into rural areas. As the Commission observed in the Report and Order, there may be circumstances in which our market-oriented policies lack the ability to foster access to spectrum and deployment of wireless service in rural areas. In situations such as these, therefore, it may be appropriate to impose renewal-term performance requirements for both existing and future licenses in order to continue to encourage the provisioning of wireless service to rural areas. Based on these observations, the Further Notice seeks comment in the following areas.

35. First, the Commission seeks comment on the appropriate mechanism to further ensure that spectrum continues to be put to its highest valued use. Specifically, the *Rural Further Notice* seeks additional comment concerning the effectiveness of the Commission's partitioning, disaggregation, and secondary markets rules as well as other market-based policies and rules in making wireless services available in more rural areas.

36. Second, the Commission also seeks comment on the potential use of ''keep what you use'' relicensing mechanisms, renewal term substantial service requirements, and other alternatives such as easements to move unused or underused spectrum to those carriers who may be able to use it more intensively. At the same time, the Commission seeks comment on the economic impact of employing the above approaches and whether there are different services that may benefit from a different approach to expanded spectrum access.

3. Legal Basis

37. The Commission tentatively concludes that it has authority to issue the *Rural Further Notice* under sections 4(i), 11, 303(r), 309(j) and 706 of the Communications Act of 1934, as amended, 47 U.S.C. 154(i), 157, 161, 303(r), and 309(j).

4. Description and Estimate of the Number of Small Entities to Which the Rules Will Apply

38. The RFA directs agencies to provide a description of, and where feasible, an estimate of the number of small entities that may be affected by the rules adopted herein. The RFA generally defines the term ''small entity'' as having the same meaning as the terms ''small business,'' ''small organization,'' and ''small governmental jurisdiction.'' In addition, the term ''small business'' has the same meaning as the term ''small business concern'' under the Small Business Act. A ''small business concern'' is one which: (1) Is independently owned and operated; (2) is not dominant in its field of operation; and (3) satisfies any additional criteria established by the Small Business Administration (SBA).

39. *Cellular Licensees.* The SBA has developed a small business size standard for small businesses in the category ''Cellular and Other Wireless Telecommunications.'' Under that SBA category, a business is small if it has 1,500 or fewer employees. According to the Bureau of the Census, only twelve firms out of a total of 1,238 cellular and other wireless telecommunications firms operating during 1997 had 1,000 or more employees. Therefore, even if all 12 of these firms were cellular telephone companies, nearly all cellular carriers are small businesses under the SBA's definition.

40. *220 MHz Radio Service—Phase I Licensees.* The 220 MHz service has both Phase I and Phase II licenses. Phase I licensing was conducted by lotteries in 1992 and 1993. There are approximately 1,515 such non-nationwide licensees and four nationwide licensees currently authorized to operate in the 220 MHz band. The Commission has not developed a definition of small entities specifically applicable to such incumbent 220 MHz Phase I licensees. To estimate the number of such licensees that are small businesses, we apply the small business size standard under the SBA rules applicable to ''Cellular and Other Wireless Telecommunications'' companies. This category provides that a small business is a wireless company employing no more than 1,500 persons. According to the Census Bureau data for 1997, only 12 firms out of a total of 1,238 such firms that operated for the entire year, had 1,000 or more employees. If this general ratio continues in the context of Phase I 220 MHz licensees, the Commission estimates that nearly all such licensees are small businesses under the SBA's small business standard.

41. *220 MHz Radio Service—Phase II Licensees.* The 220 MHz service has both Phase I and Phase II licenses. The Phase II 220 MHz service is subject to spectrum auctions. For this service in

1997, we adopted a small business size standard for defining ''small'' and ''very small'' businesses for purposes of determining their eligibility for special provisions such as bidding credits and installment payments. This small business standard indicates that a ''small business'' is an entity that, together with its affiliates and controlling principals, has average gross revenues not exceeding $15 million for the preceding three years. A ''very small business'' is defined as an entity that, together with its affiliates and controlling principals, has average gross revenues that do not exceed $3 million for the preceding three years. The SBA has approved these small size standards. Auctions of Phase II licenses commenced on September 15, 1998, and closed on October 22, 1998. In the first auction, 908 licenses were auctioned in three different-sized geographic areas: three nationwide licenses, 30 Regional Economic Area Group (EAG) Licenses, and 875 Economic Area (EA) Licenses. Of the 908 licenses auctioned, 693 were sold. Thirty-nine small businesses won 373 licenses in the first 220 MHz auction. A second auction included 225 licenses: 216 EA licenses and 9 EAG licenses. Fourteen companies claiming small business status won 158 licenses. A third auction included four licenses: 2 BEA licenses and 2 EAG licenses in the 220 MHz Service. No small or very small business won any of these licenses.

42. *Lower 700 MHz Band Licenses.* We adopted criteria for defining three groups of small businesses for purposes of determining their eligibility for special provisions such as bidding credits. We have defined a small business as an entity that, together with its affiliates and controlling principals, has average gross revenues not exceeding $40 million for the preceding three years. A very small business is defined as an entity that, together with its affiliates and controlling principals, has average gross revenues that are not more than $15 million for the preceding three years. Additionally, the lower 700 MHz Service has a third category of small business status that may be claimed for Metropolitan/Rural Service Area (MSA/RSA) licenses. The third category is entrepreneur, which is defined as an entity that, together with its affiliates and controlling principals, has average gross revenues that are not more than $3 million for the preceding three years. The SBA has approved these small size standards. An auction of 740 licenses (one license in each of the 734 MSAs/RSAs and one license in each of the six EAGs) commenced on August 27, 2002, and closed on September 18, 2002. Of the 740 licenses available for auction, 484 licenses were sold to 102 winning bidders. Seventy-two of the winning bidders claimed small business, very small business or entrepreneur status and won a total of 329 licenses. A second auction commenced on May 28, 2003, and closed on June 13, 2003, and included 256 licenses: 5 EAG licenses and 476 CMA licenses. Seventeen winning bidders claimed small or very small business status and won sixty licenses, and nine winning bidders claimed entrepreneur status and won 154 licenses.

43. *Upper 700 MHz Band Licenses.* The Commission authorized service in the upper 700 MHz band in 2000. The related auction, previously scheduled for January 13, 2003, has been postponed.

44. *Paging.* For the Paging Service in 1997, we adopted a size standard for ''small businesses'' for purposes of determining their eligibility for special provisions such as bidding credits and installment payments. A small business is an entity that, together with its affiliates and controlling principals, has average gross revenues not exceeding $15 million for the preceding three years. The SBA has approved this definition. An auction of Metropolitan Economic Area (MEA) licenses commenced on February 24, 2000, and closed on March 2, 2000. Of the 2,499 licenses auctioned, 985 were sold. Fifty-seven companies claiming small business status won 440 licenses. An auction of Metropolitan Economic Area (MEA) and EA licenses commenced on October 30, 2001, and closed on December 5, 2001. Of the 15,514 licenses auctioned, 5,323 were sold. One-hundred thirty-two companies claiming small business status purchased 3,724 licenses. A third auction, consisting of 8,874 licenses in each of 175 EAs and 1,328 licenses in all but three of the 51 MEAs commenced on May 13, 2003, and closed on May 28, 2003. Seventy-seven bidders claiming small or very small business status won 2,093 licenses. Currently, there are approximately 24,000 Private Paging site-specific licenses and 74,000 Common Carrier Paging licenses. According to the most recent Trends in Telephone Service, 608 private and common carriers reported that they were engaged in the provision of either paging or ''other mobile'' services. Of these, we estimate that 589 are small, under the SBA-approved small business size standard. We estimate that the majority of private and common carrier paging providers would qualify as small entities under the SBA definition.

45. *Broadband Personal Communications Service* (PCS). The broadband PCS spectrum is divided into six frequency blocks designated A through F, and the Commission has held auctions for each block. The Commission has created a small business size standard for Blocks C and F as an entity that has average gross revenues of less than $40 million in the three previous calendar years. For Block F, an additional small business size standard for ''very small business'' was added and is defined as an entity that, together with its affiliates, has average gross revenues of not more than $15 million for the preceding three calendar years. These small business size standards, in the context of broadband PCS auctions, have been approved by the SBA. No small businesses within the SBA-approved small business size standards bid successfully for licenses in Blocks A and B. There were 90 winning bidders that qualified as small entities in the Block C auctions. A total of 93 ''small'' and ''very small'' business bidders won approximately 40 percent of the 1,479 licenses for Blocks D, E, and F. On March 23, 1999, the Commission reauctioned 155 C, D, E, and F Block licenses; there were 113 small business winning bidders.

46. *Narrowband PCS.* The Commission held an auction for Narrowband PCS licenses that commenced on July 25, 1994, and closed on July 29, 1994. A second commenced on October 26, 1994, and closed on November 8, 1994. For purposes of the first two Narrowband PCS auctions, ''small businesses'' were entities with average gross revenues for the prior three calendar years of $40 million or less. Through these auctions, the Commission awarded a total of 41 licenses, 11 of which were obtained by four small businesses. To ensure meaningful participation by small business entities in future auctions, the Commission adopted a two-tiered small business size standard in 2000. A ''small business'' is an entity that, together with affiliates and controlling interests, has average gross revenues for the three preceding years of not more than $40 million. A ''very small business'' is an entity that, together with affiliates and controlling interests, has average gross revenues for the three preceding years of not more than $15 million. The SBA has approved these small business size standards. A third auction commenced on October 3, 2001, and closed on October 16, 2001. Here, five bidders won 317 (MTA and nationwide) licenses. Three of these claimed status

as a small or very small entity and won 311 licenses. A fourth auction commenced on September 24, 2003, and closed on September 29, 2003. Here, four bidders won 48 licenses. Four of these claimed status as a very small entity and won 48 licenses. Finally, a fifth auction commenced on September 24, 2003, and closed on September 25, 2003. Here, one bidder won five licenses. That bidder claimed status as a very small entity.

47. *Specialized Mobile Radio* (SMR). The Commission awards ''small entity'' bidding credits in auctions for SMR geographic area licenses in the 800 MHz and 900 MHz bands to firms that had revenues of no more than $15 million in each of the three previous calendar years. The Commission awards ''very small entity'' bidding credits to firms that had revenues of no more than $3 million in each of the three previous calendar years. The SBA has approved these small business size standards for the 900 MHz Service. The Commission has held auctions for geographic area licenses in the 800 MHz and 900 MHz bands. The 900 MHz SMR auction began on December 5, 1995, and closed on April 15, 1996. Sixty bidders claiming that they qualified as small businesses under the $15 million size standard won 263 geographic area licenses in the 900 MHz SMR band. The 800 MHz SMR auction for the upper 200 channels began on October 28, 1997, and was completed on December 8, 1997. Ten bidders claiming that they qualified as small businesses under the $15 million size standard won 38 geographic area licenses for the upper 200 channels in the 800 MHz SMR band. A second auction for the 800 MHz band was held on January 10, 2002 and closed on January 17, 2002 and included 23 BEA licenses. One bidder claiming small business status won five licenses.

48. The auction of the 1,050 800 MHz SMR geographic area licenses for the General Category channels began on August 16, 2000, and was completed on September 1, 2000. Eleven bidders won 108 geographic area licenses for the General Category channels in the 800 MHz SMR band qualified as small businesses under the $15 million size standard. In an auction completed on December 5, 2000, a total of 2,800 Economic Area licenses in the lower 80 channels of the 800 MHz SMR service were sold. Of the 22 winning bidders, 19 claimed ''small business'' status and won 129 licenses. Thus, combining all three auctions, 40 winning bidders for geographic licenses in the 800 MHz SMR band claimed status as small business.

49. In addition, there are numerous incumbent site-by-site SMR licensees and licensees with extended implementation authorizations in the 800 and 900 MHz bands. We do not know how many firms provide 800 MHz or 900 MHz geographic area SMR pursuant to extended implementation authorizations, nor how many of these providers have annual revenues of no more than $15 million. One firm has over $15 million in revenues. We assume, for purposes of this analysis, that all of the remaining existing extended implementation authorizations are held by small entities, as that small business size standard is established by the SBA.

50. *Private Land Mobile Radio* (PLMR). PLMR systems serve an essential role in a range of industrial, business, land transportation, and public safety activities. These radios are used by companies of all sizes operating in all U.S. business categories, and are often used in support of the licensee's primary (non-telecommunications) business operations. For the purpose of determining whether a licensee of a PLMR system is a small business as defined by the SBA, we could use the definition for ''Cellular and Other Wireless Telecommunications.'' This definition provides that a small entity is any such entity employing no more than 1,500 persons. The Commission does not require PLMR licensees to disclose information about number of employees, so the Commission does not have information that could be used to determine how many PLMR licensees constitute small entities under this definition. Moreover, because PLMR licensees generally are not in the business of providing cellular or other wireless telecommunications services but instead use the licensed facilities in support of other business activities, we are not certain that the Cellular and Other Wireless Telecommunications category is appropriate for determining how many PLMR licensees are small entities for this analysis. Rather, it may be more appropriate to assess PLMR licensees under the standards applied to the particular industry subsector to which the licensee belongs.

51. The Commission's 1994 Annual Report on PLMRs indicates that at the end of fiscal year 1994, there were 1,087,267 licensees operating 12,481,989 transmitters in the PLMR bands below 512 MHz. Because any entity engaged in a commercial activity is eligible to hold a PLMR license, the revised rules in this context could potentially impact every small business in the United States.

52. *Fixed Microwave Services.* Fixed microwave services include common carrier, private-operational fixed, and broadcast auxiliary radio services. Currently, there are approximately 22,015 common carrier fixed licensees and 61,670 private operational-fixed licensees and broadcast auxiliary radio licensees in the microwave services. The Commission has not yet defined a small business with respect to microwave services. For purposes of this FRFA, we will use the SBA's definition applicable to ''Cellular and Other Wireless Telecommunications'' companies—that is, an entity with no more than 1,500 persons. The Commission does not have data specifying the number of these licensees that have more than 1,500 employees, and thus is unable at this time to estimate with greater precision the number of fixed microwave service licensees that would qualify as small business concerns under the SBA's small business size standard. Consequently, the Commission estimates that there are 22,015 or fewer small common carrier fixed licensees and 61,670 or fewer small private operational-fixed licensees and small broadcast auxiliary radio licensees in the microwave services that may be affected by the rules and policies adopted herein. The Commission notes, however, that the common carrier microwave fixed licensee category includes some large entities.

53. *Wireless Communications Services.* This service can be used for fixed, mobile, radiolocation, and digital audio broadcasting satellite uses. The Commission defined ''small business'' for the wireless communications services (WCS) auction as an entity with average gross revenues of $40 million for each of the three preceding years, and a ''very small business'' as an entity with average gross revenues of $15 million for each of the three preceding years. The SBA has approved these definitions. The FCC auctioned geographic area licenses in the WCS service. In the auction, which commenced on April 15, 1997 and closed on April 25, 1997, there were seven bidders that won 31 licenses that qualified as very small business entities, and one bidder that won one license that qualified as a small business entity. An auction for one license in the 1670–1674 MHz band commenced on April 30, 2003 and closed the same day. One license was awarded. The winning bidder was not a small entity.

54. *39 GHz Service.* The Commission defines ''small entity'' for 39 GHz licenses as an entity that has average gross revenues of less than $40 million

in the three previous calendar years. ''Very small business'' is defined as an entity that, together with its affiliates, has average gross revenues of not more than $15 million for the preceding three calendar years. The SBA has approved these definitions. The auction of the 2,173 39 GHz licenses began on April 12, 2000, and closed on May 8, 2000. The 18 bidders who claimed small business status won 849 licenses.

55. *Local Multipoint Distribution Service.* An auction of the 986 Local Multipoint Distribution Service (LMDS) licenses began on February 18, 1998, and closed on March 25, 1998. The Commission defined ''small entity'' for LMDS licenses as an entity that has average gross revenues of less than $40 million in the three previous calendar years. An additional classification for ''very small business'' was added and is defined as an entity that, together with its affiliates, has average gross revenues of not more than $15 million for the preceding three calendar years. These regulations defining ''small entity'' in the context of LMDS auctions have been approved by the SBA. There were 93 winning bidders that qualified as small entities in the LMDS auctions. A total of 93 small and very small business bidders won approximately 277 A Block licenses and 387 B Block licenses. On March 27, 1999, the Commission re-auctioned 161 licenses; there were 32 small and very small business winning bidders that won 119 licenses.

56. *218–219 MHz Service.* The first auction of 218–219 MHz (previously referred to as the Interactive and Video Data Service or IVDS) spectrum resulted in 178 entities winning licenses for 594 Metropolitan Statistical Areas (MSAs). Of the 594 licenses, 567 were won by 167 entities qualifying as a small business. For that auction, we defined a small business as an entity that, together with its affiliates, has no more than a $6 million net worth and, after federal income taxes (excluding any carry over losses), has no more than $2 million in annual profits each year for the previous two years. For this service in 1999, we defined a small business as an entity that, together with its affiliates and persons or entities that hold interests in such an entity and their affiliates, has average annual gross revenues not exceeding $15 million for the preceding three years. A very small business is defined as an entity that, together with its affiliates and persons or entities that hold interests in such an entity and its affiliates, has average annual gross revenues not exceeding $3 million for the preceding three years. The SBA has approved of these definitions. At this time, we cannot estimate the number of licenses that will be won by entities qualifying as small or very small businesses under our rules in future auctions of 218–219 MHz spectrum. Given the success of small businesses in the previous auction, and the prevalence of small businesses in the subscription television services and message communications industries, we assume for purposes of this FRFA that in future auctions, many, and perhaps all, of the licenses may be awarded to small businesses.

57. *Location and Monitoring Service* (LMS). Multilateration LMS systems use non-voice radio techniques to determine the location and status of mobile radio units. For purposes of auctioning LMS licenses, the Commission has defined ''small business'' as an entity that, together with controlling interests and affiliates, has average annual gross revenues for the preceding three years not exceeding $15 million. A ''very small business'' is defined as an entity that, together with controlling interests and affiliates, has average annual gross revenues for the preceding three years not exceeding $3 million. These definitions have been approved by the SBA. An auction for LMS licenses commenced on February 23, 1999, and closed on March 5, 1999. Of the 528 licenses auctioned, 289 licenses were sold to four small businesses. We cannot accurately predict the number of remaining licenses that could be awarded to small entities in future LMS auctions.

58. *Rural Radiotelephone Service.* We use the SBA definition applicable to cellular and other wireless telecommunication companies, *i.e.*, an entity employing no more than 1,500 persons. There are approximately 1,000 licensees in the Rural Radiotelephone Service, and the Commission estimates that there are 1,000 or fewer small entity licensees in the Rural Radiotelephone Service that may be affected by the rules and policies adopted herein.

59. *Air-Ground Radiotelephone Service.* We use the SBA definition applicable to cellular and other wireless telecommunication companies, *i.e.*, an entity employing no more than 1,500 persons. There are approximately 10 licensees in the Air-Ground Radiotelephone Service, and the Commission estimates that almost all of them qualify as small entities under the SBA definition.

60. *Offshore Radiotelephone Service.* This service operates on several ultra high frequency (UHF) TV broadcast channels that are not used for TV broadcasting in the coastal area of the states bordering the Gulf of Mexico. At present, there are approximately 55 licensees in this service. We use the SBA definition applicable to cellular and other wireless telecommunication companies, *i.e.*, an entity employing no more than 1,500 persons. The Commission is unable at this time to estimate the number of licensees that would qualify as small entities under the SBA definition. The Commission assumes, for purposes of this FRFA, that all of the 55 licensees are small entities, as that term is defined by the SBA.

61. *Multiple Address Systems* (MAS). Entities using MAS spectrum, in general, fall into two categories: (1) Those using the spectrum for profit-based uses, and (2) those using the spectrum for private internal uses. With respect to the first category, the Commission defines ''small entity'' for MAS licenses as an entity that has average gross revenues of less than $15 million in the three previous calendar years. ''Very small business'' is defined as an entity that, together with its affiliates, has average gross revenues of not more than $3 million for the preceding three calendar years. The SBA has approved of these definitions. The majority of these entities will most likely be licensed in bands where the Commission has implemented a geographic area licensing approach that would require the use of competitive bidding procedures to resolve mutually exclusive applications. The Commission's licensing database indicates that, as of January 20, 1999, there were a total of 8,670 MAS station authorizations. Of these, 260 authorizations were associated with common carrier service. In addition, an auction for 5,104 MAS licenses in 176 EAs began November 14, 2001, and closed on November 27, 2001. Seven winning bidders claimed status as small or very small businesses and won 611 licenses.

62. With respect to the second category, which consists of entities that use, or seek to use, MAS spectrum to accommodate their own internal communications needs, we note that MAS serves an essential role in a range of industrial, safety, business, and land transportation activities. MAS radios are used by companies of all sizes, operating in virtually all U.S. business categories, and by all types of public safety entities. For the majority of private internal users, the definitions developed by the SBA would be more appropriate. The applicable definition of small entity in this instance appears to be the ''Cellular and Other Wireless Telecommunications'' definition under the SBA rules. This definition provides that a small entity is any entity employing no more than 1,500 persons.

The Commission's licensing database indicates that, as of January 20, 1999, of the 8,670 total MAS station authorizations, 8,410 authorizations were for private radio service, and of these, 1,433 were for private land mobile radio service.

63. *Incumbent 24 GHz Licensees.* The rules that we adopt could affect incumbent licensees who were relocated to the 24 GHz band from the 18 GHz band, and applicants who wish to provide services in the 24 GHz band. The Commission did not develop a definition of small entities applicable to existing licensees in the 24 GHz band. Therefore, the applicable definition of small entity is the definition under the SBA rules for ''Cellular and Other Wireless Telecommunications.'' This definition provides that a small entity is any entity employing no more than 1,500 persons. The 1992 Census of Transportation, Communications and Utilities, conducted by the Bureau of the Census, which is the most recent information available, shows that only 12 radiotelephone (now Wireless) firms out of a total of 1,178 such firms that operated during 1992 had 1,000 or more employees. This information notwithstanding, we believe that there are only two licensees in the 24 GHz band that were relocated from the 18 GHz band: Teligent and TRW, Inc. It is our understanding that Teligent and its related companies have less than 1,500 employees, though this may change in the future. TRW is not a small entity. Thus, only one incumbent licensee in the 24 GHz band is a small business entity.

64. *Future 24 GHz Licensees.* With respect to new applicants in the 24 GHz band, we have defined ''small business'' as an entity that, together with controlling interests and affiliates, has average annual gross revenues for the three preceding years not exceeding $15 million. ''Very small business'' in the 24 GHz band is defined as an entity that, together with controlling interests and affiliates, has average gross revenues not exceeding $3 million for the preceding three years. The SBA has approved these definitions. The Commission will not know how many licensees will be small or very small businesses until the auction, if required, is held.

65. *700 MHz Guard Band Licenses.* In the 700 MHz Guard Band Order, we adopted a small business size standard for ''small businesses'' and ''very small businesses'' for purposes of determining their eligibility for special provisions such as bidding credits and installment payments. A ''small business'' is an entity that, together with its affiliates and controlling principals, has average gross revenues not exceeding $15 million for the preceding three years. Additionally, a ''very small business'' is an entity that, together with its affiliates and controlling principals, has average gross revenues that are not more than $3 million for the preceding three years. An auction of 52 MEA licenses commenced on September 6, 2000, and closed on September 21, 2000. Of the 104 licenses auctioned, 96 licenses were sold to nine bidders. Five of these bidders were small businesses that won a total of 26 licenses. A second auction of 700 MHz Guard Band licenses commenced on February 13, 2001 and closed on February 21, 2001. All eight of the licenses auctioned were sold to three bidders. One of these bidders was a small business that won a total of two licenses.

66. In addition, the SBA has developed a small business size standard for Cable and Other Program Distribution, which includes all such companies generating $12.5 million or less in annual receipts. According to Census Bureau data for 1997, there were a total of 1,311 firms in this category, total, that had operated for the entire year. Of this total, 1,180 firms had annual receipts of under $10 million, and an additional 52 firms had receipts of $10 million or more but less than $25 million. Consequently, we estimate that the majority of providers in this service category are small businesses that may be affected by the rules and policies proposed in the *Rural Further Notice*.

5. Description of Projected Reporting, Recordkeeping, and Other Compliance Requirements

67. The *Rural Further Notice* does not propose any specific reporting, recordkeeping or compliance requirements. However, we seek comment on what, if any, requirements may arise as a result of our discussion in the *Rural Further Notice*.

6. Steps Taken to Minimize Significant Economic Impact on Small Entities, and Significant Alternatives Considered

68. The RFA requires an agency to describe any significant, specifically small business, alternatives that it has considered in developing its approach, which may include the following four alternatives (among others): (1) The establishment of differing compliance or reporting requirements or timetables that take into account the resources available to small entities; (2) the clarification, consolidation, or simplification of compliance or reporting requirements under the rule for small entities; (3) the use of performance, rather than design, standards; and (4) an exemption from coverage of the rule, or any part thereof, for small entities.

69. As stated, the *Rural Further Notice*, the Commission seeks detailed comment on additional measures that the Commission can take in order to promote the further deployment of wireless services to rural and underserved areas. As a general matter, it is reasonable to conclude that targeted programs designed to encourage deployment of services in high cost or hard-to-serve rural areas could impose additional regulatory requirements on a substantial number of carriers, including small entities. Overall, however, the Commission believes that by creating further opportunities for carriers to serve rural areas, small entities could see a significant positive economic impact as a result of a new ability to deploy their services in smaller, rural areas to which their business plans may be better suited. A more specific discussion of the impact to small entities is detailed below.

70. In this *Rural Further Notice*, the Commission seeks additional comment on the effectiveness of its current partitioning, disaggregation, and secondary markets spectrum leasing rules in the deployment of wireless service to rural areas. Specifically, the Commission seeks to develop a better understanding of the ways in which these rules may be insufficient to promote access to spectrum for all carriers, including small entities. For example, the Commission seeks comment on an alternative proposal initially suggested by a previous commenter, which would modify the current rules to provide bidding credits for auction winners that commit to partitioning portions of their licenses to rural carriers. This plan could impact all rural carriers, including small entities, by giving them greater access to spectrum. In addition, the Commission also requests comment on an alternative approach to the current spectrum leasing rules that would require carriers to take affirmative steps to enter into spectrum leasing arrangements, such as requiring them to report leasing requests made to them and the reasons the requests did not result in a lease. An alternative such as this could impact small entities by enabling them to enter smaller spectrum leasing arrangements for which they may be better suited.

71. The *Rural Further Notice* also seeks comment on the potential use of ''keep what you use'' relicensing mechanisms as well as renewal term substantial service requirements in order to further encourage the provisioning of wireless service to rural

areas. However, the Commission also seeks comment on the alternative raised by commenters that a ''keep what you use'' approach could potentially impede the efforts taken by the Commission with the secondary markets rules. In addition, the *Rural Further Notice* requests comment on an alternative approach that would adopt a substantial service construction requirement for licenses that are beyond their initial terms. In this respect, the Commission asks whether such measures would promote access to spectrum in sparsely populated areas and thereby ease the way for carriers, including small entities, to serve rural and underserved areas.

7. Federal Rules that May Duplicate, Overlap or Conflict with the Proposed Rules.

72. None.

C. Initial Paperwork Reduction Act of 1995 Analysis

73. This *Rural Further Notice* does not contain either a proposed or a modified information collection. Accordingly, we need not seek comment on the impact of this *Rural Further Notice* on information collections, pursuant to the Paperwork Reduction Act of 1995.

D. Comment Dates

74. Pursuant to §§ 1.415 and 1.419 of the Commission's rules, interested parties may file comments on or before January 14, 2005, and reply comments on or before February 14, 2005. Comments and reply comments should be filed in WT Docket Nos. 02–381, 01–14, 03–202. Comments may be filed using the Commission's Electronic Comment Filing System (ECFS) or by filing paper copies.

75. Comments filed through the ECFS can be sent as an electronic file via the Internet to *http://www.fcc.gov/cgb/ecfs/*. Generally, only one copy of an electronic submission must be filed. If multiple docket or rulemaking numbers appear in the caption of this proceeding, however, commenters must transmit one electronic copy of the comments to each docket or rulemaking number referenced in the caption. In completing the transmittal screen, commenters should include their full name, U.S. Postal Service mailing address, and the applicable docket or rulemaking number. Parties may also submit an electronic comment by Internet e-mail. To get filing instructions for e-mail comments, commenters should send an e-mail to *ecfs@fcc.gov*, and should include the following words in the body of the message, ''get form.'' A sample form and directions will be sent in reply. Parties who choose to file by paper must file an original and four copies of each filing. If more than one docket or rulemaking number appears in the caption of this proceeding, commenters must submit two additional copies for each additional docket or rulemaking number.

76. Parties that choose to file by paper must file an original and four copies of each filing. Filings can be sent by hand or messenger delivery, by commercial overnight courier, or by first-class or overnight U.S. Postal Service mail (although we continue to experience delays in receiving U.S. Postal Service mail). The Commission's contractor, Best Copy and Printing, Inc., will receive hand-delivered or messenger-delivered paper filings for the Commission's Secretary at 236 Massachusetts Avenue, NE., Suite 110, Washington, DC 20002. The filing hours at this location will be 8 a.m. to 7 p.m. All hand deliveries must be held together with rubber bands or fasteners. Any envelopes must be disposed of before entering the building. One copy of all comments should also be sent to the Commission's contractor, Natek, Inc., 445 12th Street, SW., Suite CY–B402, Washington, DC 20554. In addition, parties who choose to file by paper should provide a courtesy copy of each filing to Allen A. Barna, Mobility Division, Wireless Telecommunications Bureau, 445 12th Street, SW., Portals I, Room 6324, Washington, DC 20554 or by e-mail to *allen.barna@fcc.gov*.

77. Commercial overnight mail (other than U.S. Postal Service Express Mail and Priority Mail) must be sent to 9300 East Hampton Drive, Capitol Heights, MD 20743. U.S. Postal Service first-class mail, Express Mail, and Priority Mail should be addressed to Natek, Inc., 445 12th Street, SW., Washington, DC 20554. All filings must be addressed to the Commission's Secretary, Office of the Secretary, Federal Communications Commission.

78. Copies of all filings will be available for public inspection and copying during regular business hours at the FCC Reference Information Center, Room CY–A257, at Portals II, 445 12th St., SW., Washington, DC 20554, and will be placed on the Commission's Internet site. Copies of comments and reply comments will be available through the Commission's contractor, Natek, Inc., 445 12th St., SW., Room CY–B402, Washington, DC 20554, *www.bcpiweb.com,* 1–800–378–3160.

If you are sending this type of document or using this delivery method	It should be addressed for delivery to
Hand-delivered or messenger-delivered paper filings for the Commission's Secretary.	236 Massachusetts Avenue, NE., Suite 110, Washington, DC 20002 (8 to 7 p.m.).
Other messenger-delivered documents, including documents sent by overnight mail (other than United States Postal Service Express Mail and Priority Mail).	9300 East Hampton Drive, Capitol Heights, MD 20743 (8 a.m. to 5:30 p.m.).
United States Postal Service first-class mail, Express Mail, and Priority Mail.	445 12th Street, SW., Washington, DC 20554.

79. Parties who choose to file by paper should also submit their comments on diskette. These diskettes, plus one paper copy, should be submitted to: Milton Price, Mobility Division, Wireless Telecommunications Bureau, Federal Communications Commission, at 236 Massachusetts Avenue, NE., Suite 110, Washington, DC 20002. Such a submission should be on a 3.5-inch diskette formatted in an IBM compatible format using Word or compatible software. The diskette should be accompanied by a cover letter and should be submitted in ''read only'' mode. The diskette should be clearly labeled with the commenter's name, proceeding (including the docket numbers, WT Docket Nos. 02–381, 01–14, 03–202, type of pleading (comment or reply comment), date of submission, and the name of the electronic file on the diskette. The label should also include the following phrase ''Disk Copy—Not an Original.'' Each diskette should contain only one party's pleadings, preferably in a single electronic file. In addition, commenters must send diskette copies to the Commission's copy contractor, 445 12th Street, SW., Room CY–B402, Washington, DC 20554 (see alternative

addresses above for delivery by hand or messenger).

80. Regardless of whether parties choose to file electronically or by paper, parties should also file one copy of any documents filed in this docket with the Commission's copy contractor, 445 12th Street SW., CY–B402, Washington, DC 20554 (see alternative addresses above for delivery by hand or messenger).

81. Alternative formats (computer diskette, large print, audio cassette and Braille) are available to persons with disabilities by contacting Brian Millin at (202) 418–7426, TTY (202) 418–2555, or via e-mail to *Brian.Millin@fcc.gov*. This Report and Order and Further Notice of Proposed Rulemaking can also be downloaded in Microsoft Word and ASCII formats at *http://www.fcc.gov/wtb*.

IV. Ordering Clauses

82. Pursuant to the authority contained in sections 4(i), 11, 303(r), 309(j) and 706 of the Communications Act of 1934, as amended, 47 U.S.C. 154(i), 157, 161, 303(r), and 309(j), this further notice of proposed rulemaking is *adopted*.

83. The Commission's Consumer and Governmental Affairs Bureau, Reference Information Center, shall send a copy of the Report and Order and Further Notice of Proposed Rulemaking, including the Initial Regulatory Flexibility Analysis, to the Chief Counsel for Advocacy of the Small Business Administration.

Federal Communications Commission.

William F. Caton,

Deputy Secretary.

[FR Doc. 04–27050 Filed 12–14–04; 8:45 am]

BILLING CODE 6712–01–P

Federal Register

Wednesday,
December 15, 2004

Part III

Department of Housing and Urban Development

24 CFR Part 970
Demolition or Disposition of Public Housing Projects; Proposed Rule

DEPARTMENT OF HOUSING AND URBAN DEVELOPMENT

24 CFR Part 970

[Docket No. FR–4598–P–01; HUD–2004–0013]

RIN 2577–AC20

Demolition or Disposition of Public Housing Projects

AGENCY: Office of the Assistant Secretary for Public and Indian Housing, HUD.

ACTION: Proposed rule.

SUMMARY: This proposed rule revises HUD's regulations governing demolition or disposition of public housing projects. This rule establishes the general and specific requirements for HUD approval of demolition or disposition applications, relocation of residents, resident participation in the form of consultation and opportunity to purchase a public housing project, the replacement of units, and a new authority for a public housing agency (PHA) to demolish a small number of its units without a formal application under certain circumstances, referred to as ''*de minimis*'' demolition. This proposed rule seeks comments on these provisions as well as any other provision of this proposed rule.

DATES: Comment Due Date: February 14, 2005.

ADDRESSES: Interested persons are invited to submit written comments regarding this proposed rule to the Regulations Division, Office of General Counsel, Room 10276, Department of Housing and Urban Development, 451 Seventh Street, SW., Washington, DC 20410–0500. Interested persons may also submit comments electronically through either:

- The Federal eRulemaking Portal at: *http://www.regulations.gov;* or
- The HUD electronic Web site at: *http://www.epa.gov/feddocket.* Follow the link entitled, ''View Open HUD Dockets''. Commenters should follow the instructions provided on that site to electronically submit their comments.

Facsimile (FAX) comments are *not* acceptable. In all cases, communications must refer to the above docket number and title. All comments and communications submitted will be available, without revision, for public inspection and copying between 8 a.m. and 5 p.m. weekdays at the above address. Copies are also available for inspection and downloading at *http://www.epa.gov/feddocket.* Comments that are submitted electronically to the above Web sites, or that are submitted to the HUD Regulations Division at the above address, during the 60-day opportunity for notice and comment, are placed in the public rules docket and are available to the public for inspection and copying. As a result, these comments are in the public domain and will be treated by the Department as public comments.

FOR FURTHER INFORMATION CONTACT: For further information about this rule, contact Ainars Rodins, Director, Public and Indian Housing Special Application Center, Department of Housing and Urban Development, Ralph H. Metcalfe Federal Building, 77 West Jackson Boulevard, Room 2401, Chicago, IL 60604–3507; telephone: (312) 353–6236 (this is not a toll-free number). Persons with hearing or speech impairments may access that number toll-free through TTY by calling the Federal Relay Service at 800–877–8339.

SUPPLEMENTARY INFORMATION:

I. Background—Changes to Demolition or Disposition Requirements Under the Quality Housing and Work Responsibility Act of 1998

Section 531 of the Quality Housing and Work Responsibility Act of 1998 (Pub. L. 105–276, approved October 21, 1998) (QHWRA) amended the provisions on public housing demolition or disposition found in Section 18 of the United States Housing Act of 1937, 42 U.S.C. 1437p (Section 18). QHWRA changed both the general standard for approval of applications for demolition or disposition of public housing stock, and many of the specific procedures for these actions. During the interim period between the effective date of QHWRA revisions, October 21, 1998, and the publication of a final rule, PIH Notice 99–19, extended by PIH notices 2000–16, 2001–38, 2002–23, and most recently, 2003–9, implements Section 18 as amended. The notices are available from HUD's Web site at *http://www.hud.gov,* or through HUDclips, *http://www.hudclips.org.* In addition, a copy of the notice can be obtained by calling 800–767–7468 and asking for PIH Notice 99–19, as extended.

Prior to QHWRA, HUD could not approve a demolition or disposition of a public housing project or portion of the project unless HUD determined that, in the case of an application for demolition, the project was obsolete and unusable for public housing, and that no reasonable program of modifications would be feasible to return the project to useful life. For a disposition application, the PHA, prior to QHWRA, had to determine that retention of the property was not in the best interests of the tenants or the PHA because (1) developmental changes in the area surrounding the project adversely affected the health or safety of the tenants or the feasible operation of the project by the PHA; (2) the disposition would have allowed the acquisition of better housing stock that would have been more effectively and efficiently operated as low-income housing available in the community; or (3) the Secretary determined other factors were consistent with the best interests of the tenants and PHA and not inconsistent with the U.S. Housing Act of 1937 (1937 Act).

Section 18 as amended alters these standards so that HUD is required to approve the demolition or disposition application if the PHA certifies to the existence of specified factors supporting those actions. HUD is not required to approve an application if HUD has information clearly inconsistent with the certification, or has information that the PHA has failed to comply with the consultation requirements. For demolition, the PHA has to certify that the project is ''unsuitable'' (rather than ''unusable'') for public housing, and that no reasonable program of modifications is ''cost-effective'' (rather than ''feasible'') to return the project to useful life. For disposition, the PHA must certify that retention of the project is not in the best interest of the residents or the PHA, for reasons specified in the statute. This procedure is similar to the procedure under prior law, except that the factors previously used have been revised to eliminate the requirement that disposition allow for the acquisition of replacement housing that will preserve the same total amount of low-income housing stock in the community, and to no longer require as a prerequisite ''developmental changes'' in the area surrounding the project. Under the current law, disposition is justified if the PHA can certify that conditions in the area surrounding the project adversely affect the health or safety of the residents or the feasible operation of the project, or disposition allows for the acquisition, development, or rehabilitation of other properties that will be more efficiently or effectively operated as low-income housing. In addition to these changes, QHWRA alters other procedures related to demolition and disposition, removes some former requirements, and adds new requirements as further discussed below.

QHWRA eliminates the one-for-one replacement requirement. One-for-one replacement of demolished units or those removed from a PHA's inventory

through disposition was first eliminated in Section 1002 of the 1995 Rescissions Act (Pub. L. 104–19, approved July 27, 1995), and that change was reenacted on a year-to-year basis until 1998.[1] As a result of the elimination of one-for-one replacement, a replacement housing plan is no longer required as part of a demolition or disposition application.

QHWRA does contain very specific provisions regarding the notification and relocation of any residents living in a building that the PHA plans to demolish or remove from its inventory through disposition, while providing that the Uniform Relocation Act does not apply to demolition or disposition under Section 18. Except for when there is an imminent threat to health and safety, the PHA must notify each family living in a building that is subject to demolition or disposition 90 days prior to the displacement date of the impending action. The notice must state that the PHA will not commence demolition or complete disposition until all families have been relocated, and that each family will be offered ''comparable housing.'' The notice must also state that the PHA will pay for the actual and reasonable relocation expenses of each resident to be displaced, and provide any necessary relocation counseling for residents who are displaced.

''Comparable Housing'' consists of housing that meets housing quality standards and that is located in an area that is generally not less desirable than the location of the housing of the person to be displaced. The housing may consist of tenant-based assistance, project-based assistance, or another public housing unit, so long as the rental rate is comparable to the rental rate of the unit from which the family is being displaced.

Section 18 provides that, prior to a disposition of all or a portion of a public housing project, ''in appropriate circumstances'' as determined by HUD, the PHA shall initially offer the property to any eligible resident organization, eligible resident management corporation, or nonprofit organization acting on behalf of the residents. In order to be eligible for such an offer, which would be to purchase the property for continued use as low-income housing, the resident organization or other resident nonprofit entity must express an interest within 30 days after the PHA notifies the entity of the proposed disposition. If the entity expresses an interest in writing, the disposition cannot occur for 60 days, beginning on the date of receipt of the written notice, to give the entity time to obtain a firm commitment for financing the purchase. Formerly, the statute required the PHA to offer the property to residents in the case of both a proposed demolition or disposition.

Section 18 requires the number of units developed on the former site of a public housing project that was demolished pursuant to Section 18 to be ''significantly fewer'' than the number of units on the site prior to the demolition. (*See* 42 U.S.C. 1437p(d).) This requirement was actually first instituted in 1995. (*See* Section 1002(f) of the 1995 Rescissions Act (Pub. L. 104–19, approved July 27, 1995).) The statute does not specifically define what proportion or percentage constitutes ''significantly fewer.''

Section 18 also allows for consolidation of occupancy within a building, among buildings, or between a project and other housing. The purpose of such consolidation must be to improve the living conditions of residents or to provide greater efficiency in serving the residents. (*See* 42 U.S.C. 1437p(e).)

Section 18 contains a so-called ''*de minimis*'' exception from the statute's requirements. This provision allows a PHA to demolish the lesser of five units or five percent of the total number of dwelling units owned by the PHA in any five-year period, if the space occupied by the demolished unit or units is used for meeting the service or other needs of the residents or if the unit or units are beyond repair. The statute does not define what condition constitutes ''beyond repair.''

In the case of disposition only, the law prior to QHWRA required that the net proceeds of the disposition be used to pay the development cost for the project or to retire any outstanding obligations issued to finance the project's development or modernization. Section 18 now requires that the net proceeds of disposition be used to retire outstanding obligations issued to finance the original development or modernization. Section 18 also gives the Secretary the discretion to waive that repayment requirement. Any proceeds of disposition not used for debt are permitted to be used for broadly defined purposes: to provide low-income housing, to benefit the residents of the PHA, or to leverage amounts to secure commercial enterprises, on site in public housing projects, appropriate to serve the needs of the PHA's residents.

II. This Proposed Rule

A. Purpose, Applicability, and Definitions

This proposed rule would retain the following sections from the existing regulations with some adjustments and clarifications.

Proposed § 970.3(b), which sets forth transactions and situations to which this rule would not apply, would revise current § 970.2(a) (which discusses applicability) to address changes made by QHWRA as well as to clarify areas where questions about applicability have been raised in the past. For clarification purposes, a new § 970.3(b)(5) has been added and subsequent paragraphs redesignated, making clear that this rule does not apply to provision of space within a project for Family Self Sufficiency program purposes under 42 U.S.C. 1437u(j).

Another point of clarification would be made in proposed § 970.3(b)(8), which states that condemnations and eminent domain takings by state and local authorities are not covered. In order to qualify as an exempt taking or exercise of eminent domain authority, the taking body must be authorized to acquire real property by eminent domain under state law, and must show its intent to use its power of eminent domain by taking the first step necessary under state law for an eminent domain taking. HUD must be a party to any condemnation proceeding because of its interest under the ACC (Annual Contributions Contract, defined at 24 CFR 5.403) and Declaration of Trust. HUD approval is required of any out-of-court settlement for the transfer of PHA-owned property under eminent domain due to the federal interest in the property under the ACC, and as specified in the Declaration of Trust. Additional adjustments would be made to account for changes in law.

A reference to one-for-one replacement housing would be eliminated from § 970.2(a)(7) (this material is found in proposed § 970.3(b)(8)), because one-for-one replacement of units demolished or disposed of is no longer required.

The list of transactions to which the rule does not apply would be revised to include the new provision for *de minimis* demolitions under 42 U.S.C. 1437p(f) as well as demolitions of severely distressed public housing units as part of a HOPE VI revitalization plan approved after the effective date of

[1] *See* Sections 201(b) of the Omnibus Consolidated Rescissions and Appropriations Act of 1996 (Pub. L. 104–134, approved April 26, 1996); 201(b) of the Departments of Veterans Affairs and Housing and Urban Development, and Independent Agencies Appropriations Act, 1997 (Pub. L. 104–204, approved September 26, 1996); and 201(a) of the Departments of Veterans Affairs and Housing and Urban Development, and Independent Agencies Appropriations Act, 1998 (Pub. L. 105–65, approved October 27, 1997).

QHWRA, and demolition of public housing developments removed from a PHA's inventory under Section 33 of the 1937 Act, 42 U.S.C. 1437z–5. These matters are included in proposed §§ 970.3(b)(13), (14), and (15).

A definition would be added for housing construction cost (HCC) by cross-reference to reflect that this rule proposes using the concept of HCC to help PHAs determine whether there are any modifications that would be cost-effective to return a building to useful life under 42 U.S.C. 1437p(a)(1)(A)(ii). Section 970.15 of this proposed rule expresses cost-effectiveness as a percentage of HCC. The definition of HCC is found in 24 CFR 941.103 (67 FR 76102) and is cross-referenced in this proposed rule at § 970.5.

B. Section 970.7 General Requirements for a Demolition or Disposition Application

This proposed section clarifies that HUD funds may not be used to reimburse the PHA for the costs of a demolition or disposition undertaken without the necessary written approval from HUD. Proposed § 970.7(a)(1) states that HUD will not approve an application unless it contains a certification that the PHA's approved annual plan under 24 CFR part 903 includes a description of and the timetable for any demolition or disposition for which the PHA has applied or will apply for approval under Section 18 and these regulations (except in the case of small- or high-performing PHAs eligible for streamlined annual plan treatment). This description and timetable must be the same in the annual plan and the application, and otherwise comply with Section 18 of the 1937 Act and these regulations. The remainder of proposed 24 CFR 970.7(a) states various application requirements, including a description of the property to be demolished or disposed; a description of the specific action proposed, such as demolition, disposition, or a combination; a proposed timetable for the action; a statement supporting the proposed action under the regulatory criteria; a plan for the relocation of any tenants who would be displaced by the action; and other such information demonstrating that the proposed action is legally supportable and financially viable.

Approvals for the demolition or disposition of public housing units are for specific units, which cannot be substituted for other units. Furthermore, since the PHA is required to certify that specified conditions justify demolition or disposition, HUD must be able to rely on the PHA certification as being consistent with available information or data. Since HUD will not approve a certification that it determines to be incorrect, or that is clearly inconsistent with information available to or requested by HUD, the PHA cannot substitute or add other units not covered by the application or approval. Rather, in such a case, proposed § 970.7(b)(3) states that the PHA must submit a new application. Under proposed § 970.7(b)(1), a PHA must complete its action within two years of the date of HUD approval. If a PHA decides it no longer wants to demolish or dispose of units that have been approved for demolition or disposition, it must submit a resolution of its Board of Commissioners and show that the conditions originally requiring demolition or disposition have changed (see proposed § 970.7(b)(2)).

C. Section 970.9 Resident Participation Consultation and Opportunity To Purchase

Consultation is an extremely important part of the process of applying for demolition or disposition of public housing. QHWRA requires (1) that the demolition or disposition application be developed in consultation with affected residents, any resident advisory board and resident council of the development that will be affected by the proposed demolition or disposition, and appropriate government officials, and (2), in the case of a proposed disposition, that eligible resident organizations must be given an opportunity for 30 days to indicate an interest in purchasing the development after they are notified of the sale.

This proposed rule would implement these consultation and participation requirements in 24 CFR 970.9. Elements of these requirements were found in the existing regulation at 24 CFR 970.4, 970.8, and 970.13. Proposed § 970.9, similar to § 970.8(e) of the existing regulation, requires that the PHA submit with the application a description of the consultations with the residents affected by the proposed demolition or disposition, each resident advisory board, and any resident councils of the project that will be affected by the proposed demolition or disposition. Like § 970.8(e) of the existing regulation, § 970.9 would also require that the PHA submit to HUD copies of any written comments submitted to the PHA and any evaluation the PHA has made of those comments.

At § 970.9(b), this rule proposes to implement the statutory requirement that a PHA seeking to dispose of a public housing development, in appropriate circumstances, offer it first to a resident organization, resident management corporation, or nonprofit corporation acting on behalf of residents at the development involved in the action. Notably, since the statute now applies only the resident offer requirements to proposed disposition, and not demolition, the portions of current § 970.13(a) that involve offering to-be-demolished properties to the residents are not implemented in the proposed rule.

This proposed rule also varies from the existing regulation in that it would omit the provision at § 970.13(b) that, in cases where there is no resident organization, the PHA must inform the residents and give them a chance to organize. The reason for this change is two-fold. First of all, by this time most residents have had an opportunity to form resident organizations. Secondly, the procedure has proven overly time-consuming and unworkable in those few situations where there is not yet a resident organization.

As in the existing regulations, the proposed rule would provide for HUD discretion as to the circumstances in which such a resident offer is made, in that it is only required ''in appropriate circumstances.'' (*See* proposed § 970.9(b)(1).) HUD would define the ''appropriate circumstances.'' The cases that would not present appropriate circumstances for the offer include the same ones listed in current § 970.13(a)(2)(v) and (vi). (*See* proposed § 970.9(b)(3).) Other subsections defining ''appropriate circumstances'' in the current rule relate to demolitions, and so are omitted from the proposed rule. New circumstances in which a PHA will not make an offering to residents have been added at proposed § 970.9(b)(3) to take into account HOPE VI revitalization (*see* 42 U.S.C. 1437v), mandatory removal from inventory of distressed units for which there is no potential to revitalize under 24 CFR part 971 (authorized by the 1996 Omnibus Consolidated Rescissions and Appropriations Act, Pub. Law 104–134, approved April 26, 1996), and the required conversion of distressed housing to tenant-based assistance under 42 U.S.C. 1437z–5.

If an offer is made, the proposed rule would require, in accordance with the statute, that the resident organization or entity express its interest within 30 days after receiving the notice from the PHA of the upcoming sale, and be given 60 days from the date the PHA receives the residents' expression of interest to submit a formal proposal to the PHA and to obtain firm commitments for the necessary financing. (*See* proposed

§§ 970.11(a)–(c).) Proposed § 970.11(d) contains the required contents of the initial written notice of sale. Proposed § 970.11(i) would detail the minimum contents of the tenant organization's formal purchase proposal, if any. Proposed § 970.11(g) would provide that the PHA has 60 days to review the resident purchase proposal, and, if the PHA determines that it meets the terms of sale, 14 days to notify the resident organization that the proposal has been accepted. If the PHA determines that the purchase offer differs from the terms of sale, the PHA has discretion to accept or reject the offer.

Proposed § 970.11(h) would provide for an appeal to HUD in cases where the resident organization's proposal to purchase is rejected. The proposed rule would revise the appeals process for disputes arising from the PHA's decision on residents' offers to purchase. The current appeals process has been workable because it has been rarely utilized. HUD believes that it may be inadequate if it becomes frequently used, and so proposes two major changes for public comment. One such change is that HUD will be able to extend the time to provide an initial decision from 30 days to 120 days, in 30-day increments. If there are few cases, HUD should have no problem meeting the 30-day time frame; however, this time frame could be unrealistic if HUD becomes overburdened with appeals. Secondly, the rule explicitly provides for administrative finality. HUD hopes that this will result in more efficient resolution of disputes at the administrative level, avoiding time-consuming and resource-intensive court litigation.

D. Criteria for Approval and Disapproval of Demolition or Disposition Applications (§§ 970.15, 970.17, and 970.29)

This proposed rule, in accordance with the statute, would place in the hands of PHAs much of the responsibility for determining whether a project is suitable for demolition or disposition. This rule at § 970.15(a) and § 970.17 proposes to implement the statutory standard by requiring HUD to approve the request based on the PHA's certification, unless HUD has information that the PHA's certification is incorrect. In the case of requested demolition, the PHA must certify that the development is physically obsolete and no reasonable program of modifications will be cost-effective to return the development to useful life. Section 970.15(b) indicates major problems that HUD would consider to indicate obsolescence. In the case of requested disposition, the rule proposes that the PHA must certify either that (1) conditions in the area adversely affect the health or safety of the residents or the feasible operation of the project, (2) disposition will allow the development, rehabilitation, or acquisition of other property that will be more efficiently or effectively operated as public housing, or (3) that disposition is otherwise in the best interests of the residents and the PHA, consistent with the goals of the PHA and the PHA Plan, and otherwise consistent with the statute. Section 970.17(d) would also implement the statutory provision on disposition of non-dwelling facilities and vacant land.

The proposed rule would also indicate the permissible bases for HUD to disapprove an application for demolition or disposition. (*See* proposed § 970.29.) HUD would disapprove such an application if the information to which the PHA certifies is clearly inconsistent with information available to HUD. HUD's information for this purpose can, by statute, include information that HUD requests. (*See* 42 U.S.C. 1437p(b)(1).) As this statutory provision implies, HUD has discretion to request information. (*See* proposed 24 CFR 970.7, ''general requirements for PHA demolition/disposition application for HUD approval.'') The other statutory reason for disapproval is failure of the applicant to follow the statutory consultation process. (*See* 42 U.S.C. 1437p(b)(2).) (*See* proposed § 970.29(b).)

E. Environmental Review

The proposed environmental review requirements for demolition or disposition have been placed in a stand-alone section in this proposed rule, § 970.13. Environmental review requirements apply to all demolitions or dispositions under this part, including *de minimis* demolitions pursuant to § 970.27. The environmental review shall assess the impacts of known future site reuse. Factors that indicate that the future site reuse can reasonably be considered to be known include the following: (1) Private, federal, state, or local funding for the site reuse has been committed; (2) a grant application involving the site has been filed with the federal government or a state or local unit of government; (3) the federal government or a state or unit of local government has made a commitment to take an action, including a physical action, that will facilitate a particular reuse of the site; and (4) architectural, engineering or design plans for the reuse exist that go beyond preliminary stages.

On the other hand, potential reuse of the site would not be considered to be known, and thus no environmental review of the reuse would be required before the time of demolition or disposition, if the reuse is a use: (1) For which no private, federal, state, or local funds have been committed; and (2) which is not the subject of any grant application to the federal government or a state or a unit of local government; (3) which neither the federal government nor a state or a unit of local government has made a commitment to take an action to facilitate, including a physical action; and (4) which has not been delineated in any architectural, engineering, or design plans that go beyond a preliminary stage. Information about the reuse of the site should be sought from the transferee or other sources. In addition, in the case of a demolition or disposition made necessary by a declared natural disaster, this proposed rule references certain available expedited review procedures.

F. Relocation of Tenants

Proposed §§ 970.21 and 970.23 would implement the statutory provisions regarding relocation of residents of public housing who will be displaced by demolition or disposition. By statute, such residents must be offered comparable housing that meets housing quality standards (HQS) and is located in an area generally no less desirable than the location of the displaced person's housing. (*See* 42 U.S.C. 1437p(a)(4)(A)(iii)). If the relocated residents are persons with disabilities being displaced from units with reasonable accommodations, comparable housing includes housing with reasonable accommodations. Relocation housing may be in the form of tenant- or project-based Section 8 vouchers, or occupancy in another of the PHA's units at a rental rate that is comparable to the rental rate of the unit from which the resident was moved.

The statute provides that the PHA will pay for the actual and reasonable costs of relocation of each resident. (*See* 42 U.S.C. 1437p(a)(4)(B).) ''Actual and reasonable costs of relocation'' includes the costs of transporting and moving persons with disabilities, including any reasonable accommodations to their disabilities. This rule proposes that the PHA may pay those costs from a variety of sources, including HUD funds. (*See* proposed § 970.23.) Also, as required by the statute, the rule would require the PHA, except in emergency situations, to give notice to residents 90 days before the date of displacement, to provide relocation counseling, and to refrain from taking any action until all the residents of the affected building or buildings have been relocated. (*See* 42

U.S.C. 1437p(a)(4)(A), proposed 24 CFR 970.21(e).) In addition, the PHA must have a relocation plan indicating the number of residents to be displaced, the type of counseling services that the PHA will provide, the housing resources expected to be available for the residents, and the estimated costs of the relocation expenses and the counseling services, and the source of funds to pay those costs.

G. De minimis Exception

By statute, in any five-year period a PHA may demolish the lesser of five percent of its dwelling units or five of its dwelling units, if the space occupied by the units is used for meeting service or other needs of the public housing residents or the units are beyond repair. This statutory provision is proposed to be implemented in § 970.27. The rule would make clear that the five years are counted backward from the date of the new proposed demolition under this section, and that demolitions prior to the effective date of QHWRA will not be counted in the calculation. Environmental review provisions apply to demolitions pursuant to this section.

H. Actions With Respect to Units To Be Demolished or Sold, Prior to Application Approval

Where a PHA plans to demolish or sell units, but has either applied and not yet received approval or has not yet applied, an issue arises regarding the PHA's obligation to maintain those units in operating condition. Since the PHA continues to receive subsidy to operate those units, the PHA has an obligation to maintain and operate the units as housing for low-income families. This proposed rule codifies this obligation at § 970.25. The PHA may conduct planning activities including studies and consultation regarding demolition, but must continue to provide full housing services to residents in place. While HUD is actually considering the application, if there is unit turnover, the PHA should not re-rent the units from which residents have moved. After approval of a PHA's demolition or disposition application, a PHA is required to operate all units as public housing and will receive operating subsidy in accordance with HUD's operating subsidy regulations at 24 CFR part 990.

I. Consolidation of Occupancy

A PHA may consolidate occupancy within or among buildings of a development in order to more efficiently serve the residents, without filing a demolition or disposition application. (See proposed § 970.25(b).)

J. Use of Proceeds of Disposition

This proposed rule would amend 24 CFR 970.19 to reflect the fact that QHWRA provides more flexibility than previously existed for use of the proceeds from disposition. After disposing of the property, either at fair market value by public solicitation or by another method approved by HUD, and paying approved costs of the disposition, the PHA may apply for a waiver by HUD of the obligation to use the proceeds from disposition for the retirement of debt obligations used to finance the original construction or for the subsequent modernization of the public housing development. To the extent that proceeds not used to pay off obligations remain, they can be used either to provide low-income housing to benefit the residents of the public housing agency or to leverage funds to secure on-site commercial enterprises appropriate to serve the needs of the residents. (42 U.S.C. 1437p(a)(5)(B).)

III. Supplementary Information

Paperwork Reduction Act

This rule contains collection of information requirements, which have been submitted to OMB for review under Section 3507(d) of the Paperwork Reduction Act of 1995 (44 U.S.C. Chapter 35). These new collection of information requirements are not effective until such time that OMB grants its approval. The approval numbers will be published in the **Federal Register** through separate notice. Information on these requirements is provided as follows:

Estimates of the total reporting and recordkeeping burden that will result from the collection of information are as follows:

For demolition or disposition, the total estimated paperwork burden is 1321.25 hours. The information required in 24 CFR 970.7(a)(2), a description of the existing project, in each case is already contained in the electronic system into which the required information will be submitted, and so is not expected to impose any additional paperwork burden. Therefore, even though it is a regulatory requirement, that section is not listed herein.

The burden of information collection in this proposed rule is estimated as follows:

Section No. and procedure	Number of persons affected	Number of minutes per procedure	Burden hours
970.7(a)(1) HA plan certification	243	10	40.50
970.7(a)(2) Description of property	243	[1] 0	0
970.7(a)(3) Description of proposed action	243	15	60.75
970.7(a)(4) Timetable	243	5	20.25
970.7(a)(5) Justification	243	45	182.25
970.7(a)(6) Relocation plan, if needed	243	45	182.25
970.7(a)(7) Description of resident consultation	243	30	121.50
970.7(a)(10) Appraisal in the case of disposition	171	5	14.25
970.7(a)(11) Estimate of proceeds, use of proceeds in the case of disposition	171	30	85.50
970.7(a)(12) Estimate of costs for any required relocation housing, moving costs, and counseling	243	30	121.50
970.7(a)(13) Request to waive debt	171	5	14.25
970.7(a)(14) Board resolution	243	5	20.25
970.7(a)(15) Evidence of government consultation	243	5	20.25
970.7(a)(16) Environmental review	243	5	20.25
970.7(a)(17) FH&EO certification	243	5	20.25
970.9(a) Evidence of resident consultation & evaluation	243	60	243.00
970.9(b)(4) Evidence of nonapplicability to make the offer to sell to RO	171	10	28.50
970.11 (same information as 970.7(a)(8) Offer to sell (less than 25% of disposition applications do not take the exception)	43	60	43.00
970.27(e) De minimis recordkeeping submission	7	15	1.75

Section No. and procedure	Number of persons affected	Number of minutes per procedure	Burden hours
970.35 Required reports	243	20	81.00
Total Reporting and Recordkeeping Burden (hours)			1321.25

[1] From PIC.

In accordance with 5 CFR 1320.8(d)(1), HUD is soliciting comments from members of the public and affected agencies concerning this collection of information to:

(1) Evaluate whether the proposed collection of information is necessary for the proper performance of the functions of the agency, including whether the information will have practical utility;

(2) Evaluate the accuracy of the agency's estimate of the burden of the proposed collection of information;

(3) Enhance the quality, utility, and clarity of the information to be collected;

(4) Minimize the burden of the collection of information on those who are to respond including through the use of appropriate automated collection techniques or other forms of information technology, *e.g.*, permitting electronic submission of responses.

Interested persons are invited to submit comments regarding the information collection requirements in this proposal. Comments must be received within 30 days from the date of this proposal. Comments must refer to the proposal by name and docket number (FR–4598–P–01) and must be sent to:

Mark D. Menchik, HUD Desk Officer, Office of Management and Budget, New Executive Office Building, Washington, DC 20503, Fax number: (202) 395–6947, e-mail: *Mark_D._Menchik@omb.eop.gov*; and

Sherry Fobear-McCown, Reports Liaison Officer, Office of the Assistant Secretary for Public and Indian Housing, Department of Housing and Urban Development, 451 Seventh Street SW., Room 9116, Washington, DC 20410.

Unfunded Mandates Reform Act

Title II of the Unfunded Mandates Reform Act of 1995 (2 U.S.C. 1531–1538) (UMRA) establishes requirements for federal agencies to assess the effects of their regulatory actions on state, local, and tribal governments and the private sector. This proposed rule does not impose any federal mandates on any state, local, or tribal government or the private sector within the meaning of UMRA.

Environmental Impact

A Finding of No Significant Impact (FONSI) with respect to the environment has been made in accordance with HUD regulations in 24 CFR part 50 that implement Section 102(2)(C) of the National Environmental Policy Act of 1969 (42 U.S.C. 4332(2)(C)). The finding of no significant impact is available for public inspection between 8 a.m. and 5 p.m. weekdays in the Regulations Division, Office of General Counsel, Room 10276, U.S. Department of Housing and Urban Development, 451 Seventh Street, SW., Washington, DC 20410–0500.

Impact on Small Entities

The Regulatory Flexibility Act (RFA) (5 U.S.C. 601 *et seq.*), generally requires an agency to conduct a regulatory flexibility analysis of any rule subject to notice and comment rulemaking requirements unless the agency certifies that the rule will not have a significant economic impact on a substantial number of small entities.

This rule is concerned solely with the requirements for PHAs to apply for demolition or disposition of the public housing developments that they administer. However, many of the requirements of this rule were already present under the existing regulations regarding public housing demolition or disposition. To the extent that this rule would alter the previous requirements, it would do so in ways that are likely to either leave the economic impact unchanged or lower such impact. For example, because of a statutory change, the rule would no longer require PHAs to have a replacement housing plan. The rule would provide greater flexibility than before in how PHAs can use the proceeds from disposition of a property. The rule would provide for demolition of a minimal number of units without submitting an application. Thus, the rule certainly would not impose a greater administrative burden on entities than previously, and in some ways would lower the administrative requirements for demolishing or disposing of public housing units. Therefore, the undersigned certifies that this proposed rule will not have a significant economic impact on a substantial number of small entities, and an initial regulatory flexibility analysis is not required.

Notwithstanding the determination that this rule would not have a significant economic impact on a substantial number of small entities, HUD specifically invites comments regarding less burdensome alternatives to this rule that will meet HUD's objectives as described in this preamble.

Federalism Impact

Executive Order 13132 (entitled ''Federalism'') prohibits, to the extent practicable and permitted by law, an agency from promulgating a regulation that has federalism implications and either imposes substantial direct compliance costs on state and local governments and is not required by statute, or preempts state law, unless the relevant requirements of Section 6 of the executive order are met. This rule does not have federalism implications and does not impose substantial direct compliance costs on state and local governments or preempt state law within the meaning of the executive order.

Executive Order 12866, Regulatory Planning and Review

OMB reviewed this proposed rule under Executive Order 12866 (entitled ''Regulatory Planning and Review''). OMB determined that this proposed rule is a ''significant regulatory action,'' as defined in Section 3(f) of the order (although not economically significant, as provided in Section 3(f)(1) of the order). Any changes made to the proposed rule subsequent to its submission to OMB are identified in the docket file, which is available for public inspection in the Regulations Division, Office of General Counsel Room 10276, U.S. Department of Housing and Urban Development, 451 Seventh Street, SW., Washington, DC 20410–0500.

List of Subjects in 24 CFR Part 970

Grant programs—housing and community development, Public housing, Reporting and recordkeeping requirements.

The Catalog of Federal Domestic Assistance program number for the program affected by this proposed rule is 14.850.

For the reasons stated in the preamble, HUD proposes to amend 24 CFR part 970 as follows:

1. 24 CFR part 970 is revised to read as follows:

PART 970—PUBLIC HOUSING PROGRAM—DEMOLITION OR DISPOSITION OF PUBLIC HOUSING PROJECTS

Sec.

970.1 Purpose.
970.3 Applicability.
970.5 Definitions.
970.7 General requirements for HUD approval of a PHA demolition/disposition application.
970.9 Resident participation—consultation and opportunity to purchase.
970.11 Procedures for the offer of sale to established eligible organizations.
970.13 Environmental review requirements.
970.15 Specific criteria for HUD approval of demolition requests.
970.17 Specific criteria for HUD approval of disposition requests.
970.19 Disposition of property; use of proceeds.
970.21 Relocation of residents.
970.23 Costs of demolition and relocation of displaced tenants.
970.25 Required and permitted actions prior to approval.
970.27 De minimis exception to demolition requirements.
970.29 Criteria for disapproval of demolition or disposition applications.
970.31 Replacement units.
970.33 Effect on Operating Fund Program and Capital Fund Program.
970.35 Reports and records.

Authority: 42 U.S.C. 1437p and 3535(d).

§ 970.1 Purpose.

This part states requirements for HUD approval of a public housing agency's application for demolition or disposition (in whole or in part) of public housing developments assisted under Title I of the U.S. Housing Act of 1937 (Act). The rules and procedures in 24 CFR part 85 are not applicable to this part.

§ 970.3 Applicability.

(a) This part applies to public housing developments that are owned by public housing agencies (PHAs) and that are subject to Annual Contributions Contracts (ACCs) under the Act.

(b) This part does not apply to the following:

(1) PHA-owned Section 8 housing, or housing leased under former Sections 10(c) or 23 of the Act;

(2) Demolition or disposition before the end of the initial operating period (EIOP), as determined under the ACC, of property acquired incident to the development of a public housing project (however, this exception shall not apply to dwelling units under ACC);

(3) The conveyance of public housing for the purpose of providing homeownership opportunities for lower income families under Sections 21 and 32 of the Act, the homeownership program under former Section 5(h) of the Act, or other predecessor homeownership programs;

(4) The leasing of dwelling or non-dwelling space incident to the normal operation of the project for public housing purposes, as permitted by the ACC;

(5) Making available common areas and unoccupied dwelling units in public housing projects to provide supportive services incident to an approved local Family Self Sufficiency program under 24 CFR part 984;

(6) The reconfiguration of the interior space of buildings (*e.g.*, moving or removing interior walls to change the design, sizes, or number of units) without ''demolition,'' as defined in § 970.5. (This includes the conversion of bedroom size, occupancy type, changing the status of unit from dwelling to non-dwelling.);

(7) Easements, rights-of-way, and transfers of utility systems incident to the normal operation of the development for public housing purposes, as permitted by the ACC;

(8) A whole or partial taking by a public or quasi-public entity (taking agency) authorized to take real property by its use of police power or exercise of its power of eminent domain under state law. A taking does not qualify for the exception under this paragraph unless:

(i) The taking agency has been authorized to acquire real property by use of its police power or power of eminent domain under its state law;

(ii) The taking agency has taken at least the first step in formal proceedings under its state law; and

(iii) If the taking is for a federally assisted project, the Uniform Relocation Act (URA) applies to any resulting displacement of residents and it is the responsibility of the taking agency to comply with applicable URA requirements.

(9) Demolition after conveyance of a public housing project to a non-PHA entity in accordance with an approved homeownership program under Title III of the Cranston-Gonzalez National Affordable Housing Act (HOPE I), 42 U.S.C. 1437aaa note;

(10) Units leased for non-dwelling purposes for one year or less;

(11) A public housing development that is conveyed by a PHA prior to date of funding availability (DOFA) to enable an owner entity to develop the property using the mixed-finance development method;

(12) Disposition of public housing units after DOFA for development pursuant to the mixed-finance development method at 24 CFR part 941, subpart F;

(13) Demolition under the *de minimis* exception in § 970.27, except that the environmental review provisions apply, including the provisions at §§ 970.7(a)(16) and 970.13(b) of this part;

(14) Demolition (but not disposition) of severely distressed units as part of a revitalization plan under Section 24 of the Act, 42 U.S.C. 1437v (HOPE VI) approved after October 21, 1998;

(15) Demolition (but not disposition) of public housing developments removed from a PHA's inventory under Section 33 of the Act, 42 U.S.C. 1437z–5.

§ 970.5 Definitions.

ACC, or *Annual Contributions Contract*, is defined in 24 CFR 5.403.

Act means the United States Housing Act of 1937, 42 U.S.C. 1437 *et seq.*

Appropriate government officials mean the Chief Executive Officer or officers of a unit of general local government.

Assistant Secretary means the Assistant Secretary for Public and Indian Housing at HUD.

Chief Executive Officer of a unit of general local government means the elected official or the legally designated official, who has the primary responsibility for the conduct of that entity's governmental affairs. Examples of the ''chief executive officer of a unit of general local government'' are: the elected mayor of a municipality; the elected county executive of a county; the chairperson of a county commission or board in a county that has no elected county executive; and the official designated pursuant to law by the governing body of a unit of general local government.

Demolition means the removal by razing or other means, in whole or in part, of one or more permanent buildings of a public housing development. A demolition involves any four or more of the following:

(1) Envelope removal (roof, windows, exterior walls);

(2) Kitchen removal;

(3) Bathroom removal;

(4) Electrical system removal (unit service panels and distribution circuits); or

(5) Plumbing system removal (*e.g.*, either the hot water heater or distribution piping in the unit, or both).

Disposition means the conveyance or other transfer by the PHA, by sale or other transaction, of any interest in the real estate of a public housing development, subject to the exceptions stated in § 970.3.

DOFA, or date of full availability, means the last day of the month in which substantially all (95 percent or more) of the units in a housing development are available for occupancy.

EIOP means the end of the initial operating period. If 95 percent or more of the units in a development are occupied, EIOP is the last day of the first calendar quarter after DOFA. If the development does not achieve 95 percent occupancy by this date, EIOP is the last day of the second calendar quarter after DOFA.

Firm financial commitment means a commitment that obligates a creditable source, lender, or equity provider, to the lending or equity investment of a specific sum of funds to be made on or before a specific date(s) and may contain contingencies or conditions which must be satisfied by the borrower (or entity receiving equity investments) before the closing of the transaction. The condition of a firm commitment must be that it is enforceable by the borrower (or entity receiving the equity investment) upon the satisfaction of all contingencies or conditions.

Housing Construction Cost (HCC) has the same meaning as in § 941.103 of this title.

PHA Plan—Means the PHA's initial, annual, and five-year submissions under section 5A of the U.S. Housing Act of 1937, 42 U.S.C. 1437c–1.

Resident Advisory Board (RAB) has the same meaning as in § 903.13(a) of this title.

Resident Council means a resident organization, the role and requirements of which are as described in 24 CFR part 964.

§ 970.7 General requirements for HUD approval of a PHA demolition/disposition application.

(a) *Application for HUD Approval.* A PHA must obtain written approval from HUD before undertaking any transaction involving demolition or disposition of PHA-owned property under the ACC. Where a PHA demolishes or disposes of public housing property without HUD approval, no HUD funds may be used to fund the costs of demolition or disposition or reimburse the PHA for those costs. HUD will approve an application for demolition or disposition upon the PHA's submission of an application with the required certifications and the supporting information required by this section and §§ 970.15 or 970.17. Section 970.29 specifies criteria for disapproval of an application. Approval of the application under this part does not imply approval of a request for additional funding, which the PHA must make separately under a program that makes available funding for this purpose. The PHA shall submit the application for demolition or disposition and the timetable in a time and manner and in a form prescribed by HUD. The supporting information shall include:

(1) A certification that the PHA has described the demolition or disposition in the approved PHA Annual Plan and timetable under 24 CFR part 903 (except in the case of small or high-performing PHAs eligible for streamlined annual plan treatment), and that the description in the approved PHA Annual Plan is identical to the application submitted pursuant to this part and otherwise complies with Section 18 of the Act, 42 U.S.C. 1437p, and this part;

(2) A description of all identifiable property, by development, including land, dwelling units, and other improvements, involved in the proposed demolition or disposition;

(3) A description of the specific action proposed, such as:

(i) Demolition, disposition, or demolition with disposition;

(ii) If disposition is involved, the method of sale;

(4) A general timetable for the proposed action(s) including the initial contract for demolition, the actual demolition, and, if applicable, the closing of sale or other form of disposition;

(5) A statement justifying the proposed demolition or disposition under the applicable criteria of §§ 970.15 or 970.17;

(6) If applicable, a plan for the relocation of tenants who would be displaced by the proposed demolition or disposition (including a relocation timetable as prescribed in § 970.21);

(7) A description with supporting evidence of the PHA's consultations with residents, any resident organizations, and the Resident Advisory Board, as required under § 903.9 of this title;

(8) In the case of disposition only, evidence of compliance with the offering to resident organizations, as required under § 970.9;

(9) In the case of disposition, the estimated balance of project debt, under the ACC, for development and modernization;

(10) In the case of disposition, an estimate of the fair market value of the property, established on the basis of one independent appraisal, unless otherwise determined by HUD, as described in § 970.19(c);

(11) In the case of disposition, estimates of the gross and net proceeds to be realized, with an itemization of estimated costs to be paid out of gross proceeds and the proposed use of any net proceeds in accordance with § 970.19;

(12) An estimate of costs for any required relocation housing, moving costs, and counseling.

(13) Where the PHA is requesting a waiver of the requirement for the application of proceeds for repayment of outstanding debt, the PHA must request such a waiver in its application, along with a description of the proposed use of the proceeds;

(14) A copy of a resolution by the PHA's Board of Commissioners approving the specific demolition or disposition application (or, in the case of the report required under § 970.27(e) for ''*de minimis*'' demolitions, the Board of Commissioners' resolution approving the ''*de minimis*'' action) for that development or developments or portions thereof. The resolution must be signed and dated after all resident and local government consultation has been completed;

(15) Evidence that the application was developed in consultation with appropriate government officials as defined in § 970.5, including:

(i) A description of the process of consultation with local government officials, which summarizes dates, meetings, and issues raised by the local government officials and the PHA's responses to those issues;

(ii) A signed and dated letter in support of the application from the Chief Executive Officer of the unit of local government which demonstrates that the PHA has consulted with the appropriate local government officials on the proposed demolition or disposition;

(iii) Where the local government consistently fails to respond to the PHA's attempts at consultation including letters, requests for meetings, public notices, and other reasonable efforts, documentation of those attempts;

(iv) Where the PHA covers multiple jurisdictions (such as a regional housing authority), the PHA must meet these requirements for each of the jurisdictions where the PHA is proposing demolition or disposition of PHA property;

(16) An approved Environmental Review of the proposed demolition or disposition in accordance with 24 CFR parts 50 or 58 for any demolition or disposition of public housing property covered under this part, as required under 24 CFR 970.13;

(17) A certification that the demolition or disposition application does not violate any remedial civil rights order or agreement, voluntary compliance agreement, final judgment, consent decree, settlement agreement, or other court order or agreement;

(18) Any additional information necessary to support the application and assist HUD in making determinations under this part.

(b) *Completion of demolition/disposition or rescissions of approval.* (1) A PHA must complete any approved demolition or disposition within two years of the date of HUD's approval.

(2) HUD will consider a PHA's request to rescind an earlier approval to demolish or dispose of public housing property, where a PHA submits a resolution from the Board of Commissioners and documentation that the conditions that originally led to the request for demolition or disposition have significantly changed or been removed.

(3) The Assistant Secretary will not approve any request by the PHA to either substitute units or add units to those originally included in the approved demolition or disposition application, unless the PHA submits a new application for those units that meet the requirements of this part.

§ 970.9 Resident participation—consultation and opportunity to purchase.

(a) *Resident consultation.* PHAs must consult with residents who will be affected by the proposed action with respect to all demolition or disposition applications. The PHA must provide with its application evidence that the application was developed in consultation with residents who will be affected by the proposed action, any resident organizations for the development, PHA-wide resident organizations that will be affected by the demolition or disposition, and the Resident Advisory Board (RAB). The PHA must also submit copies of any written comments submitted to the PHA and any evaluation that the PHA has made of the comments.

(b) *Resident organization offer to sell—applicability.* In the situation where the PHA applies to dispose of a development or portion of a development:

(1) The PHA shall, in appropriate circumstances as determined by the Assistant Secretary, initially offer the property proposed for disposition to any eligible resident organization, eligible resident management corporation as defined in 24 CFR part 964, or to a nonprofit organization acting on behalf of the residents at any development proposed for disposition, if the resident entity has expressed an interest in purchasing the property for continued use as low-income housing. The entity must make the request in writing to the PHA, no later than 30 days after the resident entity has received the notification of sale from the PHA;

(2) If the resident entity has expressed an interest in purchasing the property for continued use as low-income housing, the entity, in order for its purchase offer to be considered, must:

(i) In the case of a nonprofit organization, be acting on behalf of the residents of the development; and

(ii) Demonstrate that it has obtained a firm commitment for the necessary financing within 60 days of serving its written notice of interest under paragraph (b)(1) of this section.

(3) The requirements of this section do not apply to the following cases, which have been determined not to present an appropriate opportunity for purchase by a resident organization:

(i) A unit of state or local government requests to acquire vacant land that is less than two acres in order to build or expand its public services (a local government wishes to use the land to build or establish a police substation); or

(ii) A PHA seeks disposition outside the public housing program to privately finance or otherwise develop a facility to benefit low-income families (*e.g.*, day care center, administrative building, or other types of low-income housing);

(iii) Units that have been legally vacated in accordance with 24 CFR part 970 (HOPE VI) or 24 CFR part 971 (Section 202 Mandatory Conversion), excluding developments where the PHA has consolidated vacancies;

(iv) Distressed units required to be converted to tenant-based assistance under 42 U.S.C. 1437z–5; or

(vi) Disposition of non-dwelling properties including administration and community buildings, and maintenance facilities.

(4) If the requirements of this section are not applicable, as provided in paragraph (b)(3) of this section, the PHA may proceed to submit to HUD its application under this part to dispose of the property, or a portion of the property, without affording an opportunity for purchase by a resident organization. However, PHAs must consult with their residents in accordance with paragraph (a) of this section. The PHA must submit documentation with date and signatures to support the applicability of one of the exceptions in paragraph (b)(3) of this section. Examples of appropriate documentation include but are not limited to: a letter from the public body that wants to acquire the land, copies of memoranda or letters approving the PHA's previous application under part 970 or mandatory conversion plan; and the HUD transmittal document approving the proposed revitalization plan.

(c) *Established eligible organizations.* Where there are eligible resident organizations, eligible resident management corporations as defined in 24 CFR part 964, or nonprofit organizations acting on behalf of the residents (collectively, ''established eligible organizations''), that have expressed an interest, in writing, to the PHA within 30 days of the date of notification of the proposed sale, in purchasing the property for continued use a low-income housing at the affected development, the PHA shall follow the procedures for making the offer described in § 970.11.

§ 970.11 Procedures for the offer of sale to established eligible organizations.

In making an offer of sale to establish eligible organizations as defined in § 970.9(c), in the case of proposed disposition, the PHA shall proceed as follows:

(a) *Initial written notification of sale of property.* The PHA shall send an initial written notification to each established eligible organization (for purposes of this section, an established eligible organization that has been so notified is a ''notified eligible organization'') of the proposed sale of the property. The notice of sale must include, at a minimum, the information listed in paragraph (d) of this section;

(b) *Initial expression of interest.* All notified eligible organizations shall have 30 days to initially express an interest, in writing, in the offer (''initial expression of interest''). The initial expression of interest need not contain details regarding financing, acceptance of an offer of sale, or any other terms of sale.

(c) *Opportunity to obtain firm financial commitment by interested entity.* If a notified eligible organization expresses interest in writing during the 30-day period referred to in paragraph (b) of this section, no disposition of the property shall occur during the 60-day period beginning on the date of the receipt of the written notice of interest. During this period, the PHA must give

the entity expressing interest an opportunity to obtain a firm financial commitment as defined in § 970.5 for the financing necessary to purchase the property;

(d) *Contents of initial written notification.* The initial written notification to established eligible organizations under paragraph (a) of this section must include at a minimum the following:

(1) An identification of the development, or portion of the development, involved in the proposed disposition, including the development number and location, the number of units and bedroom configuration, the amount and use of non-dwelling space, the current physical condition (fire damaged, friable asbestos, lead-based paint test results), and percent of occupancy;

(2) A copy of the appraisal of the property and any terms of sale;

(3) Disclosure and description of the PHA's plans for reuse of land, if any, after the proposed disposition;

(4) An identification of available resources (including its own and HUD's) to provide technical assistance to the organization to help it to better understand its opportunity to purchase the development, the development's value, and potential use;

(5) A statement that public housing developments sold to resident organizations will not continue to receive capital and operating subsidy after the completion of the sale;

(6) Any and all terms of sale that the PHA will require, including a statement that the purchaser must use the property for low-income housing. If the PHA does not know all the terms of the offer of sale at the time of the notice of sale, the PHA shall include all the terms of sale of which it is aware. The PHA must supply the totality of all the terms of sale and all necessary materials to the residents no later than the day it receives the residents' initial expression of interest;

(7) A date by which an established eligible organization must express its interest, in writing, in response to the PHA's offer to sell the property proposed for demolition or disposition, which shall be up to 30 days from the date of the official written offer of sale from the PHA;

(8) A statement that the established eligible organization will be given 60 days from the date of the PHA's receipt of its letter expressing interest to develop and submit a proposal to the PHA to purchase the property and to obtain a firm financial commitment, as defined in § 970.5. The statement shall explain that the PHA shall approve the proposal from an organization if the proposal meets the terms of sale and is supported by a firm commitment for financing. The statement shall also provide that the PHA can consider accepting an offer from the organization that differs from the terms of sale. The statement shall explain that if the PHA receives proposals from more than one organization, the PHA shall select the proposal that meets the terms of sale, if any. In the event that two proposals from the development to be sold meet the terms of sale, the PHA shall chose the best proposal. If no proposal meets the terms of sale, the PHA in its discretion may or may not select the best proposal.

(e) *Response to the notice of sale.* The established eligible organization or organizations have up to 30 days to respond to the notice of sale from the PHA. The established eligible organization shall respond to the PHA's notice of sale by means of an initial expression of interest under paragraph (b) of this section.

(f) *Resident proposal.* The established eligible organization has up to 60 days from the date the PHA receives its initial expression of interest and provides all necessary terms and information to prepare and submit a proposal to the PHA for the purchase of the property of which the PHA plans to dispose, and to obtain a firm commitment for financing. The resident's proposal shall provide all the information requested in paragraph (i) of this section.

(g) *PHA Review of Proposals.* The PHA has up to 60 days from the date of receipt of the proposal or proposals to review the proposals and determine whether they meet the terms of sale described in the PHA's offer or offers. If the PHA determines that the proposal meets the terms of sale, within 14 days of the date of this determination, the PHA shall notify the organization of that fact and that the proposal has been accepted. If the PHA determines that the proposal differs from the terms of sale, the PHA may accept or reject the proposal in its discretion;

(h) *Appeals.* The established eligible organization has the right to appeal the PHA's decision to the Assistant Secretary for Public and Indian Housing, or his designee, by sending a letter of appeal within 30 days of the PHA's decision to the field office director. The letter of appeal must include copies of the proposal and any related correspondence, along with a statement of reasons why the organization believes the PHA should have decided differently. HUD shall render a decision within 30 days, and notify the organization and the PHA by letter within 14 days of such decision. If HUD cannot render a decision within 30 days, HUD will so notify the PHA and the established eligible organization in writing, in which case HUD will have an additional 30 days in which to render a decision. HUD may continue to extend its time for decision in 30-day increments for a total of 120 days. Once HUD renders its decision, there is no further administrative appeal or remedy available.

(i) *Contents of the organization's proposal.* The established eligible organization's proposal shall at a minimum include the following:

(1) The length of time the organization has been in existence;

(2) A description of current or past activities which demonstrate the organization's organizational and management capability, or the planned acquisition of such capability through a partner or other outside entities (in which case the proposal should state how the partner or outside entity meets this requirement);

(3) To the extent not included in paragraph (i)(2) of this section, the organization's experience in the development of low-income housing, or planned arrangements with partners or outside entities with such experience (in which case the proposal should state how the partner or outside entity meets this requirement);

(4) A statement of financial capability;

(5) A description of involvement of any non-resident organization (such as non-profit, for-profit, governmental or other entities), if any, the proposed division of responsibilities between the non-resident organization and the established eligible organization, and the non-resident organization's financial capabilities;

(6) A plan for financing the purchase of the property and a firm financial commitment as stated in paragraph (c) of this section for funding resources necessary to purchase the property and pay for any necessary repairs;

(7) A plan for using the property for low-income housing;

(8) The proposed purchase price in relation to the appraised value;

(9) Justification for purchase at less than the fair market value in accordance with § 970.19(a), if appropriate;

(10) Estimated time schedule for completing the transaction;

(11) Any additional items necessary to respond fully to the PHA's terms of sale;

(12) A resolution from the resident organization approving the proposal; and

(13) A proposed date of settlement, generally not to exceed six months from

the date of PHA approval of the proposal, or such period as the PHA may determine to be reasonable.

(j) *PHA obligations.* The PHA must:

(1) Prepare and distribute the initial notice of sale pursuant to 24 CFR 970.11(a), and, if any established eligible organization expresses an interest, any further documents necessary to enable the organization or organizations to make an offer to purchase;

(2) Evaluate proposals received, make the selection based on the considerations set forth in paragraph (b) of this section, and issue letters of acceptance or rejection;

(3) Prepare certifications, where appropriate, as provided in paragraph (k) of this section;

(4) Comply with its obligations under § 970.7(a) regarding tenant consultation and provide evidence to HUD that the PHA has met those obligations. The PHA shall not act in an arbitrary manner and shall give full and fair consideration to any offer from a qualified resident management corporation, resident council of the affected development or a nonprofit organization acting on behalf of the residents and accept the proposal if the proposal meets the terms of sale.

(k) *PHA post-offer requirements.* After the resident offer, if any, is made, the PHA shall:

(1) Submit its disposition application to HUD in accordance with Section 18 of the Act and this part. The disposition application must include complete documentation that the resident offer provisions of this part have been met. This documentation shall include:

(i) A copy of the signed and dated PHA notification letter(s) to each established eligible organization informing them of the PHA's intention to submit an application for disposition, the organization's right to purchase the property to be disposed of; and

(ii) The responses from each organization.

(2)(i) If the PHA accepts the proposal of an established eligible organization, the PHA shall submit revisions to its disposition application to HUD in accordance with Section 18 of the Act and this part reflecting the arrangement with the resident organization, with appropriate justification for a negotiated sale and for sale at less than fair market value, if applicable.

(ii) If the PHA rejects the proposal of the resident organization, the resident organization may appeal as provided in paragraph (h) of this section. Once the appeal is resolved, or, if there is no appeal, the 30 days allowed for appeal has passed, HUD shall proceed to approve or disapprove the application.

(3) HUD will not process an application for disposition unless the PHA provides HUD with one of the following:

(i) An official board resolution or its equivalent from each established eligible organization stating that such organization has received the PHA offer, and that it understands the offer and waives its opportunity to purchase the project, or portion of the project, covered by the disposition application;

(ii) A certification from the executive director or board of commissioners of the PHA that the 30-day time frame to express interest has expired and no response was received to its offer; or

(iii) A certification from the executive director or board of commissioners of the PHA with supporting documentation that the offer was otherwise rejected.

§ 970.13 Environmental review requirements.

(a) Activities under this part (including de minimis demolition pursuant to § 970.27) are subject to HUD environmental regulations in 24 CFR part 58. However, HUD may make a finding in accordance with § 58.11(d) of this title and may itself perform the environmental review under the provisions of 24 CFR part 50 if a PHA objects in writing to the responsible entity performing the review under 24 CFR part 58.

(b) The environmental review is limited to the demolition or disposition action and any known re-use, and is not required for any unknown future re-use.

(c) In the case of a demolition or disposition made necessary by a disaster that the President has declared under the Robert T. Stafford Disaster Relief and Emergency Assistance Act, 42 U.S.C. 5121 *et seq.*, or a disaster that has been declared under state law by the officer or entity with legal authority to make such declaration, pursuant to 24 CFR 50.43 and 24 CFR 58.33, the provisions of 40 CFR 1506.11 will apply.

§ 970.15 Specific criteria for HUD approval of demolition requests.

(a) In addition to other applicable requirements of this part, HUD will approve an application for demolition upon the PHA's certification that it meets the following statutory criteria, unless the PHA's certification is clearly inconsistent with information or data available to HUD or requested by HUD:

(1) In the case of demolition of all or a portion of a development, the development, or portion of the development, is obsolete as to physical condition, location, or other factors, making it unsuitable for housing purposes; and

(2) No reasonable program of modifications is cost-effective to return the development or portion of the development to useful life. HUD generally shall not consider a program of modifications to be cost-effective if the costs of such program exceed the HCC in effect at the time the application is submitted to HUD.

(b) Major problems indicative of obsolescence are:

(1) As to physical condition: Structural deficiencies that cannot be corrected in a cost-effective manner (settlement of earth below the building caused by inadequate structural fills, faulty structural design, or settlement of floors), or other design or site problems (severe erosion or flooding);

(2) As to location: physical deterioration of the neighborhood; change from residential to industrial or commercial development; or environmental conditions as determined by HUD environmental review in accord with 24 CFR part 50, which jeopardize the suitability of the site or a portion of the site and its housing structures for residential use;

(3) Other factors which have seriously affected the marketability, usefulness, or management of the property.

(c) In the case of demolition of only a portion of a development, the demolition will help to ensure the viability of the remaining portion of the project (to reduce development density to permit better access by emergency, fire, or rescue services, or to improve marketability by reducing the density to that of the neighborhood or other developments in the PHA's inventory).

§ 970.17 Specific criteria for HUD approval of disposition requests.

In addition to other applicable requirements of this part, HUD will approve a request for disposition by sale or other transfer of a public housing project or other real property if the PHA certifies that the retention of the property is not in the best interests of the residents or the PHA for at least one of the following reasons, unless information available to HUD is inconsistent with the certification:

(a) Conditions in the area surrounding the project (density, or industrial or commercial development) adversely affect the health or safety of the tenants or the feasible operation of the project by the PHA;

(b) Disposition allows the acquisition, development, or rehabilitation of other properties that will be more efficiently

or effectively operated as low-income housing developments;

(c) The PHA has otherwise determined the disposition to be appropriate for reasons that are consistent with the goals of the PHA and the PHA Plan and that are otherwise consistent with the Act;

(d) In the case of disposition of property other than dwelling units (community facilities or vacant land), the PHA certifies that:

(1) The non-dwelling facilities or land exceeds the needs of the development (after EIOP); or

(2) The disposition of the property is incidental to, or does not interfere with, continued operation of the remaining portion of the development.

§ 970.19 Disposition of property; use of proceeds.

(a) Where HUD approves the disposition of real property of a development, in whole or in part, the PHA shall dispose of the property promptly by public solicitation of bids for not less than fair market value, unless HUD authorizes negotiated sale for reasons found to be in the best interests of the PHA or the federal government, or sale for less than fair market value (where permitted by state law), based on commensurate public benefits to the community, the PHA, or the federal government justifying such an exception. General public improvements such as streets and bridges do not qualify as commensurate public benefits.

(b) A PHA may pay the reasonable costs of disposition, and of relocation of displaced tenants allowable under § 970.21, out of the gross proceeds, as approved by HUD.

(c) To obtain an estimate of the fair market value before the property is advertised for bid, the PHA shall have one independent appraisal performed on the property proposed for disposition, unless HUD determines that:

(1) More than one appraisal is warranted; or

(2) Another method of valuation is clearly sufficient and the expense of an independent appraisal is unjustified because of the limited nature of the property interest involved or other available data.

(d) To obtain an estimate of the fair market value when a property is not publicly advertised for bid, HUD may accept a reasonable valuation of the property.

(e) A PHA shall use net proceeds, including any interest earned on the proceeds (after payment of HUD-approved costs of disposition and relocation under paragraph (a) of this section), subject to HUD approval as follows:

(1) Unless waived by HUD, for the retirement of outstanding obligations, if any, issued to finance original development or modernization of the project; and

(2) To the extent that any net proceeds remain, after the application of proceeds in accordance with paragraph (e)(1) of this section, for:

(i) The provision of low-income housing or to benefit the residents of the PHA, through such measures as modernization of lower income housing or the acquisition, development, or rehabilitation of other properties to operate as lower income housing; or

(ii) Leveraging amounts for securing commercial enterprises, on-site in public housing developments of the PHA, appropriate to serve the needs of the residents.

(f) For dispositions for the purpose stated in § 970.17(b), a PHA must demonstrate to the satisfaction of HUD that the replacement units are being provided in connection with the disposition of the property. A PHA may use sale proceeds in accordance with paragraph (e) to fund the replacement units.

§ 970.21 Relocation of residents.

(a) *Relocation of residents on a nondiscriminatory basis and relocation resources.* A PHA must offer each family displaced by demolition or disposition comparable housing that meets housing quality standards (HQS); and is located in an area that is generally not less desirable than the location of the displaced persons. The housing must be offered on a nondiscriminatory basis, without regard to race, color, religion, creed, national origin, handicap, age, familial status, or gender, in compliance with applicable federal and state laws. For persons with disabilities displaced from a unit with reasonable accommodations, comparable housing should include similar accommodations. Such housing may include:

(1) Tenant-based assistance, such as assistance under the Housing Choice Voucher Program, 24 CFR part 982, except that such assistance will not be considered ''comparable housing'' until the family is actually relocated into such housing; and

(2) Project-based assistance; or

(3) Occupancy in a unit operated or assisted by the PHA at a rental rate paid by the family that is comparable to the rental rate applicable to the unit from which the family is vacated.

(b) *In-place tenants.* A PHA may not complete disposition of a building until all tenants residing in the building are relocated.

(c) *Financial resources.* (1) Sources of funding for relocation costs related to demolition or disposition may include but are not limited to capital funds or other federal funds currently available for this purpose;

(2) If CDBG funds (see 24 CFR part 570) are used to pay any part of the cost of the demolition or the cost of a project for which the property is acquired, the transaction is subject to the Residential Anti-Displacement and Relocation Assistance Plan, as described in the applicable regulations.

(d) *Relocation timetable.* For the purpose of determining operating subsidy eligibility under 24 CFR part 990, a PHA must provide the following information in the application or immediately following application submission:

(1) The number of occupied units at the time of demolition/disposition application approval;

(2) A schedule for the relocation of those residents on a month-by-month basis.

(e) The PHA is responsible for the following:

(1) Notifying each family residing in the development of the proposed demolition or disposition 90 days prior to the displacement date, except in cases of imminent threat to health and safety. The notification must include a statement that:

(i) The development or portion of the development will be demolished or disposed of;

(ii) The demolition of the building in which the family resides will not commence until each resident of the building has been relocated;

(iii) Each family displaced by such action will be provided comparable housing, which may include housing with reasonable accommodations for disability, if required under section 504 of the Rehabilitation Act of 1973 and HUD's regulations, as described in paragraph (a) of this section;

(2) Providing for the payment of the actual and reasonable relocation expenses of each resident to be displaced, including residents requiring reasonable accommodations because of disabilities;

(3) Ensuring that each displaced resident is offered comparable replacement housing as described in paragraph (b) of this section; and

(4) Providing any necessary counseling for residents that are displaced.

(f) In addition, the PHA's plan for the relocation of residents who would be displaced by the proposed demolition or disposition must indicate:

(1) The number of individual residents to be displaced;

(2) The type of counseling and advisory services the PHA plans to provide;

(3) What housing resources are expected to be available to provide housing for displaced residents; and

(4) An estimate of the costs for counseling and advisory services and resident moving expenses, and the expected source for payment of these costs.

(g) The Uniform Relocation Act does not apply to demolitions and dispositions under this part.

§ 970.23 Costs of demolition and relocation of displaced tenants.

Where HUD has approved demolition of a project, or a portion of a project, and the proposed action is part of a program under the Capital Fund Program (24 CFR part 905), the costs of demolition and of relocation of displaced residents may be included in the budget funded with capital funds pursuant to Section 9(d) of the Act, 42 U.S.C. 1437g(d), or awarded HOPE VI or other eligible HUD funds.

§ 970.25 Required and permitted actions prior to approval.

(a) A PHA may not take any action to demolish or dispose of a public housing development or a portion of a public housing development without obtaining HUD approval under this part. HUD funds may not be used to pay for the cost to demolish or dispose of a public housing development or a portion of a public housing development, unless HUD approval has been obtained under this part. Until the PHA receives HUD approval, the PHA shall continue to meet its ACC obligations to maintain and operate the property as housing for lower income families. However, the PHA may engage in planning activities, analysis, or consultations without seeking HUD approval. Planning activities may include project viability studies, capital planning, or comprehensive occupancy planning. The PHA must continue to provide full housing services to all residents that remain in the development. A PHA should not re-rent these units at turnover while HUD is considering its application for demolition or disposition. However, the PHA's operating subsidy eligibility will continue to be calculated as stated in 24 CFR part 990.

(b) A PHA may consolidate occupancy within or among buildings of a development, or among developments, or with other housing for the purposes of improving living conditions of, or providing more efficient services to residents, without submitting a demolition or disposition application.

§ 970.27 De minimis exception to demolition requirements.

(a) A PHA may demolish units without submitting an application if the PHA is proposing to demolish not more than the lesser of:

(1) Five dwelling units; or

(2) Five percent of the total dwelling units owned by the PHA over any five-year period.

(b) The five-year period referred to in paragraph (a)(2) of this section is the five years counting backwards from the date of the proposed *de minimis* demolition, except that any demolition performed prior to October 21, 1998, will not be counted against the five units or five percent of the total, as applicable. For example, if a PHA that owns 1,000 housing units wishes to demolish units under this *de minimis* provision on July 1, 2004, and previously demolished two units under this provision on September 1, 2000, and two more units on July 1, 2001, the PHA would be able to demolish one additional unit for a total of five in the preceding five years. As another example, if a PHA that owns 60 housing units as of July 1, 2004, had demolished two units on September 1, 2000, and one unit on July 1, 2001, that PHA would not be able to demolish any further units under this ''*de minimis*'' provision until after September 1, 2005, because it would have already demolished five percent of its total.

(c)(1) In order to qualify for this exemption, the space occupied by the demolished unit must be used for meeting the service or other needs of public housing residents (use of space to construct a laundry, community center, child care facility, office space for a general provider; or for use as open space, or garden); or

(2) The unit being demolished must be beyond repair. Beyond repair means physical improvement or rehabilitation costs which exceed the computed HCC for a new development with the same structure type and number and size of units in the market area.

(d) The environmental review requirements at § 970.13 shall apply to demolitions under this section.

(e) For recordkeeping purposes, PHAs that wish to demolish units under this section shall submit the information required in § 970.7(a)(1), (2), (12), (13), and (14). HUD will accept a certification from the PHA that one of the two conditions in paragraph (c) of this section apply unless HUD has independent information that requirements for ''*de minimis*'' demolition have not been met.

§ 970.29 Criteria for disapproval of demolition or disposition applications.

HUD will disapprove of an application if HUD determines that:

(a) Any certification made by the PHA under this part is clearly inconsistent with:

(1) The approved PHA Plan;

(2) Any information and data available to HUD related to the requirements of this part, such as failure to meet the requirements for the justification for demolition or disposition as found in §§ 970.15 and 970.17; or

(3) information or data requested by HUD; or

(b) The application was not developed in consultation with:

(1) Residents who will be affected by the proposed demolition or disposition as required in § 970.9; and

(2) Each resident advisory board and resident council, if any, of the project (or portion thereof) that will be affected by the proposed demolition or disposition as required in § 970.9, and appropriate government officials as required in § 970.7.

§ 970.31 Replacement units.

Replacement public housing units may be built on the original public housing location or in the same neighborhood as the original public housing location if the number of the replacement public housing units is significantly fewer than the number of units demolished. Such development must comply with 24 CFR part 905, Public Housing Capital Fund Program, as well as 24 CFR part 941.

§ 970.33 Effect on the Operating Fund Program and Capital Fund Program.

The provisions of 24 CFR part 990, the Public Housing Operating Fund Program, and 24 CFR part 905, the Public Housing Capital Fund Program, apply.

§ 970.35 Reports and records.

(a) After HUD approval of demolition or disposition of all or part of a project, the PHA shall provide information on the following:

(1) Actual completion of each demolition contract by entering the appropriate information into HUD's applicable data system, or providing the information by another method HUD may require, within a week of making the final payment to the demolition contractor, or expending the last

remaining funds if funded by force account;

(2) Execution of sales or lease contracts by entering the appropriate information into HUD's applicable data system, or providing the information by another method HUD may require, within a week of execution;

(3) The PHA's use of the proceeds of sale by providing a financial statement showing how the funds were expended by item and dollar amount;

(4) Amounts expended for closing costs and relocation expenses, by providing a financial statement showing this information for each property sold;

(5) Such other information as HUD may from time to time require.

(b) [Reserved]

Dated: December 6, 2004.

Michael Liu,

Assistant Secretary for Public and Indian Housing.

[FR Doc. 04–27206 Filed 12–14–04; 8:45 am]

BILLING CODE 4210–33–P

Federal Register

Wednesday,
December 15, 2004

Part IV

Department of Housing and Urban Development

24 CFR Part 206

Home Equity Conversion Mortgage (HECM) Program; Insurance for Mortgages To Refinance Existing HECMs and Reduced Initial Mortgage Insurance Premiums (MIP); Final Rule

DEPARTMENT OF HOUSING AND URBAN DEVELOPMENT

24 CFR Part 206

[Docket No. FR–4667–F–03]

RIN 2502–AH63

Home Equity Conversion Mortgage (HECM) Program; Insurance for Mortgages To Refinance Existing HECMs and Reduced Initial Mortgage Insurance Premiums (MIP)

AGENCY: Office of Assistant Secretary for Housing—Federal Housing Commissioner, HUD.

ACTION: Final rule.

SUMMARY: On March 25, 2004, HUD published an interim rule implementing certain statutory changes to the Home Equity Conversion Mortgage (HECM) Program made by section 201 of the American Homeownership and Economic Opportunity Act of 2000 (AHEOA). Among other changes, the rule provided for a reduced initial mortgage insurance premium (MIP) on HECM refinancings. The interim rule requested comments on the MIP provision of the rule. This final rule follows publication of the March 25, 2004, interim rule. HUD did not receive any public comments on the interim regulatory change regarding the reduced MIP for HECM refinancings and, therefore, is adopting the interim rule without change.

DATES: *Effective Date:* January 14, 2005.

FOR FURTHER INFORMATION CONTACT: Vance T. Morris, Director, Office of Single Family Program Development, Office of Insured Single Family Housing, Room 9266, Department of Housing and Urban Development, 451 Seventh Street, SW., Washington, DC 20410–8000; telephone (202) 708–2121 (this is not a toll-free number). Individuals with speech or hearing impairments may access this number through TTY by calling the toll-free Federal Information Relay Service at (800) 877–8339.

SUPPLEMENTARY INFORMATION

I. Background

HUD's Home Equity Conversion Mortgage (HECM) Program enables homeowners 62 years of age or older who have paid off their mortgages or have small mortgage balances to stay in their homes while using some of their equity as income. The program enables these homeowners to obtain financing with a Federal Housing Administration (FHA) insured reverse mortgage, which is a mortgage that converts equity into income. The FHA insures HECM loans to protect lenders against loss. Such a loss could occur if amounts withdrawn exceed equity when the homeowner's property is sold. The statutory authority for the HECM Program is section 255 of the National Housing Act (12 U.S.C. 1715z–20) (NHA). HUD's regulations implementing the HECM Program are located at 24 CFR part 206.

Section 201 of the American Homeownership and Economic Opportunity Act of 2000 (Pub. L. 106–569, approved December 27, 2000) (AHEOA) made several changes to the HECM Program. Among other amendments, section 201(a) of AHEOA added a new section 255(k) to the NHA. Section 255(k) in part authorizes FHA to offer mortgage insurance for the refinancing of existing HECMs and establishes several homeowner protection and streamlining requirements concerning such refinancings. On June 5, 2001 (66 FR 30278), HUD published a proposed rule to implement certain statutory changes to the HECM Program made by section 201 of the AHEOA. The proposed rule solicited public comments on the proposed changes to the HECM Program regulations. Two commenters wrote that, in addition to implementing the changes contained in the proposed rule, HUD should also implement its statutory authority to reduce the initial mortgage insurance premium (MIP) for HECM refinancings. Specifically, section 201(a) of AHEOA added a new section 255(k)(4) to the NHA which authorizes HUD to reduce the amount of the initial MIP collected on a HECM refinancing.

On March 25, 2004 (69 FR 15586), HUD published an interim rule that considered the public comments received on the proposed rule and made effective the proposed regulatory changes to the HECM Program contained in the June 5, 2001 proposed rule. In response to the public comments requesting that HUD implement section 255(k)(4) of the NHA, the interim rule also established a reduced MIP for HECM refinancings.

The regulatory provisions of the March 25, 2004, interim rule took effect on April 26, 2004. However, in order to provide for public comments on the amount of the MIP, HUD issued the MIP provision on an interim basis and requested public comments for a period of 60 days on the amount of the initial MIP. HUD did not request public comment on the other provisions of the interim rule, since these provisions were contained in the July 5, 2001, proposed rule and were, therefore, already the subject of public comments.

As noted above, certain statutory changes to the HECM Program were already enumerated in the June 5, 2001, proposed rule. For more information on these prior changes, interested persons should refer to the June 5, 2001, proposed rule preamble; for information on the agency's discussion of the public comments received on the June 5, 2001, proposed rule, interested persons should refer to the March 25, 2004, interim rule preamble.

II. This Final Rule

This final rule follows publication of the March 25, 2004, interim rule. The comment period on the initial MIP provision closed on May 25, 2004. HUD did not receive any public comments on the interim regulatory change regarding the reduced initial MIP for HECM refinancings. Accordingly, this final rule adopts the interim rule of March 25, 2004, without changes.

Specifically, this final rule adopts § 206.53(c), which was established by the March 25, 2004, interim rule. New § 206.53(c) implements the statutory authority provided to HUD by section 255(k) of the NHA to reduce the initial MIP for HECM refinancings. The change provides that the initial MIP paid by the mortgagee shall not exceed two percent of the increase in the maximum claim amount (*i.e.*, the difference between the maximum claim amount for the new home equity conversion mortgage and the maximum claim amount for the existing home equity conversion mortgage that is being refinanced).

HUD believes that the initial MIP limit made effective by this rule will result in a lower initial MIP for a refinanced HECM loan than for a comparable ''first'' HECM secured by a similar property. Also, the initial MIP limit will allow more homeowners to refinance their HECM loans at a lower interest rate, thus allowing homeowners to stay in their homes while using some of their equity.

III. Findings and Certifications

Regulatory Planning and Review

The Office of Management and Budget (OMB) reviewed this rule under Executive Order 12866 (entitled ''Regulatory Planning and Review''). OMB determined that this rule is a ''significant regulatory action'' as defined in section 3(f) of the order (although not economically significant, as provided in section 3(f)(1) of the order). Any changes made to this rule subsequent to its submission to OMB are identified in the docket file, which is available for public inspection in the Regulations Division, Room 10276,

Office of General Counsel, Department of Housing and Urban Development, 451 Seventh Street, SW., Washington, DC 20410–0500.

Information Collection Requirements

The information collection requirements contained in § 206.53 have been approved by OMB in accordance with the Paperwork Reduction Act of 1995 (44 U.S.C. 3501–3520) and assigned OMB control number 2502–0524. An agency may not conduct or sponsor, and a person is not required to respond to, a collection of information unless the collection displays a currently valid control number.

Unfunded Mandates Reform Act

Title II of the Unfunded Mandates Reform Act of 1995 (2 U.S.C. 1531–1538) (UMRA) establishes requirements for Federal agencies to assess the effects of their regulatory actions on State, local, and tribal governments and the private sector. This rule does not impose any Federal mandates on any State, local, or tribal government or the private sector within the meaning of UMRA.

Environmental Impact

A Finding of No Significant Impact with respect to the environment was made at the proposed rule stage in accordance with HUD regulations at 24 CFR part 50, which implement section 102(2)(C) of the National Environmental Policy Act of 1969 (42 U.S.C. 4332(2)(C)). The Finding remains applicable to this final rule and is available for public inspection between the hours of 8 a.m. and 5 p.m. weekdays in the Regulations Division, Room 10276, Office of General Counsel, Department of Housing and Urban Development, 451 Seventh Street, SW., Washington, DC 20410–0500.

Regulatory Flexibility Act

The Regulatory Flexibility Act (RFA) (5 U.S.C. 601 *et seq.*), generally requires an agency to conduct a regulatory flexibility analysis of any rule subject to notice and comment rulemaking requirements unless the agency certifies that the rule will not have a significant economic impact on a substantial number of small entities. The amendments made by this final rule will not impose any economic costs on small lenders and other participants in the HECM Program. Lenders will not be adversely affected by the reductions in the initial MIP established by this final rule, since the initial MIP is payable to HUD and not the lenders. Therefore, the undersigned certifies that this final rule will not have a significant economic impact on a substantial number of small entities.

Executive Order 13132, Federalism

Executive Order 13132 (entitled ''Federalism'') prohibits an agency from publishing any rule that has federalism implications if the rule either imposes substantial direct compliance costs on State and local governments and is not required by statute, or the rule preempts State law, unless the agency meets the consultation and funding requirements of section 6 of the Executive Order. This final rule does not have federalism implications and does not impose substantial direct compliance costs on State and local governments or preempt State law within the meaning of the Executive Order.

Catalog of Domestic Assistance Number

The Catalog of Domestic Assistance Number for the HECM Program is 14.871.

List of Subjects in 24 CFR Part 206

Aged, Condominiums, Loan programs—housing and community development, Mortgage insurance, Reporting and recordkeeping requirements.

Accordingly, for the reasons stated in the preamble, the interim rule for part 206 of subpart B of Title 24 of the Code of Federal Regulations, revising § 206.31(a)(1) and adding § 206.53, published on March 25, 2004, at 69 FR 15586, is promulgated as final, without change.

Dated: November 5, 2004.

John C. Weicher,

Assistant Secretary for Housing-Federal Housing Commissioner.

[FR Doc. 04–27310 Filed 12–14–04; 8:45 am]

BILLING CODE 4210–27–P

Federal Register

Wednesday,
December 15, 2004

Part V

Department of Transportation

Research and Special Programs Administration

49 CFR Parts 171, 172, 173 and 175

Hazardous Materials; Prohibition on the Transportation of Primary Lithium Batteries and Cells Aboard Passenger Aircraft; Final Rule

DEPARTMENT OF TRANSPORTATION

Research and Special Programs Administration

49 CFR Parts 171, 172, 173 and 175

[Docket No. RSPA–04–19886 (HM–224E]

RIN 2137–AE05

Hazardous Materials; Prohibition on the Transportation of Primary Lithium Batteries and Cells Aboard Passenger Aircraft

AGENCY: Research and Special Programs Administration (RSPA), DOT.

ACTION: Interim final rule.

SUMMARY: To protect life and property, RSPA (we), working closely with the Federal Aviation Administration (FAA), is issuing an interim final rule imposing a limited prohibition on offering for transportation and transportation of primary (non-rechargeable) lithium batteries and cells as cargo aboard passenger-carrying aircraft and equipment containing or packed with large primary lithium batteries. This rule applies to both foreign and domestic passenger-carrying aircraft entering, leaving, or operating in the United States and to persons offering primary lithium batteries and cells for transportation as cargo on any passenger-carrying aircraft. This prohibition does not affect the carriage of lithium batteries or devices containing lithium batteries that are transported in a passenger's luggage for personal use. In addition, this rule does not apply to the shipment of equipment that contains or is packed with small primary lithium batteries or to the shipment of secondary (rechargeable) lithium batteries (*e.g.*, lithium ion batteries). RSPA is also amending the Hazardous Materials Regulations to require that, when offered for transport as cargo, shipments of primary lithium batteries and cells that are excepted from classification as a Class 9 (miscellaneous) hazardous material must be marked to indicate that they are forbidden for transport aboard passenger-carrying aircraft. Because this interim final rule addresses an immediate public safety risk, it is impracticable and contrary to the public interest to precede it with a notice of proposed rulemaking and an opportunity for public comment. RSPA and FAA also plan on holding a public meeting on this rulemaking before the end of the comment period. The details of the public meeting, including time and location, will be set forth in a future **Federal Register** notice.

DATES: Effective Date: The effective date of these amendments is December 29, 2004.

Comments: Comments must be received by February 14, 2005.

ADDRESSES: You may submit comments [identified by DOT DMS Docket Number RSPA–04–19886 (HM–224E)] by any of the following methods:

- *Web Site: http://dms.dot.gov.* Follow the instructions for submitting comments on the DOT electronic docket site.
- *Fax:* 202–493–2251.
- *Mail:* Docket Management Facility; U.S. Department of Transportation, 400 Seventh Street, SW., Nassif Building, PL–401, Washington, DC 20590–0001.
- *Hand Delivery:* Room PL–401 on the plaza level of the Nassif Building, 400 Seventh Street, SW., Washington, DC, between 9 a.m. and 5 p.m., Monday through Friday, except Federal holidays.
- Federal eRulemaking Portal: Go to *http://www.regulations.gov.* Follow the online instructions for submitting comments.

Instructions: You must include the agency name (Research and Special Programs Administration and Docket number (RSPA–04–19886 (HM–224E) or the Regulatory Identification Number (RIN) for this rulemaking at the beginning of your comments. You should submit two copies of your comments if you submit them by mail. If you wish to receive confirmation that RSPA received your comments, you must include a self-addressed stamped postcard. Note that all comments received will be posted, without change, to *http://dms.dot.gov* including any personal information provided and will be available to internet users. Please see the Privacy Act section of this document.

Docket: For access to the docket to read background documents and comments received, go to *http://dms.dot.gov* at any time or to Room PL–401 on the plaza level of the Nassif Building, 400 Seventh Street, SW., Washington, DC between 9 a.m. and 5 p.m., Monday through Friday, except Federal holidays.

FOR FURTHER INFORMATION CONTACT: John A. Gale, Office of Hazardous Materials Standards, RSPA, Department of Transportation, 400 Seventh Street, SW., Washington, DC 20590–0001, Telephone (202) 366–8553.

SUPPLEMENTARY INFORMATION: This interim final rule prohibits primary lithium battery cargo shipments on passenger carrying aircraft because they are an immediate threat to the flying public. FAA and RSPA identified this category of cargo shipments by assessing recent lithium battery fires in air transportation and considering a recently released FAA technical report evaluating the flammability of primary lithium batteries and the effect of air carrier fire suppression systems on primary lithium battery fires. At this time we are not prohibiting the shipment of secondary (rechargeable) lithium batteries or those electronic devices (*e.g.*, laptop computer, cells) that contain or are packed with small lithium batteries, and passengers may continue to bring personal electronic devices on-board either in carry-on or checked baggage. RSPA is continuing to evaluate the risks posed by rechargeable lithium batteries, as well as all lithium batteries on-board aircraft, either separately or as part of equipment, and we seek comment on ways to mitigate these risks and the costs of doing so.

I. Background

Federal hazardous materials transportation law (49 U.S.C. 5101 *et seq.*) directs the Secretary of Transportation to establish regulations for the safe and secure transportation of hazardous materials in commerce. Regulations prescribed in accordance with Federal hazardous materials transportation law govern safety aspects, including security, of the transportation of hazardous materials that the Secretary considers appropriate. In 49 CFR 1.53, the Secretary delegated authority to issue regulations for the safe and secure transportation of hazardous materials in commerce to the Research and Special Programs Administrator. The Administrator issues the Hazardous Materials Regulations (HMR; 49 CFR Parts 171 through 180) under that delegated authority. The authority for enforcement of the HMR is shared by RSPA, FAA, the United States Coast Guard, Federal Motor Carrier Safety Administration, and Federal Railroad Administration. FAA has primary enforcement authority concerning transportation and shipments of hazardous materials by air. 49 CFR 1.47(k).

II. Regulation of Lithium Batteries and Cells Under the HMR

Battery manufacturers use lithium in batteries due to its favorable chemical properties. Lithium batteries are used to power both portable and non-portable products. The market for portable, battery-powered products is diverse and growing, encompassing a variety of electronic computer, communications, and entertainment products; a variety of cordless tools; and whole new classes of military and medical products. This diversity has resulted from a unique

synergy between the products themselves, the batteries they use, and the battery charger and power management systems that charge the batteries. Primary (non-rechargeable) lithium batteries are used in a variety of products, such as cameras, memory backup circuits, security devices, calculators, and watches. Secondary (rechargeable) lithium batteries are used in camcorders, cell phones, and other portable electronics.

Under the HMR, lithium batteries and cells and equipment containing or packed with lithium batteries are regulated as Class 9, Miscellaneous Hazardous Materials. In accordance with § 173.185(e) of the HMR, lithium batteries and cells must be tested in accordance with the UN Manual of Tests and Criteria; equipped with an effective means of preventing short circuits; packaged in Packing Group II performance level packagings; and identified on shipping papers and with package markings and labels. However, materials in Class 9 are not subject to the aircraft cargo compartment limits in § 175.75; therefore, there is no limit on the number of lithium batteries and cells that may be loaded in an aircraft cargo compartment. Prior to 1995, lithium batteries and cells that were not otherwise excepted from the HMR were forbidden for transportation aboard passenger carrying aircraft unless such transportation was approved by the Associate Administrator for Hazardous Materials Safety. See 49 CFR 173.185(a) (Oct. 1, 1994 ed.) and RSPA's Dec. 29, 1994 final rule in Docket No. HM–215A (59 FR 67390, 67509).

Section 173.185 provides exceptions from the packaging and hazard communication requirements in the HMR for smaller primary lithium batteries [1] and cells. When the lithium content of the battery or cell does not exceed certain limits, the batteries and cells must be packaged in strong outer packagings and in a manner to protect against short circuit; however, such shipments are excepted from all other HMR requirements.

III. Safety Concerns Associated with the Transport of Lithium Batteries and Cells by Aircraft

A. Incident at Los Angeles International Airport and NTSB Recommendations

On April 28, 1999, at Los Angeles International Airport (LAX) a shipment of two pallets of primary lithium batteries that were excepted from the HMR caught fire and burned after being off-loaded from a passenger-carrying Northwest Airlines flight from Osaka, Japan. The packages and batteries were damaged while the pallets were being handled by cargo handling personnel. The damage resulting from the cargo transfer is believed to have initiated a fire. The fire was initially fought by Northwest employees with portable fire extinguishers and a fire hose. Each time the fire appeared to be extinguished, it flared up again. The two pallets involved in the fire contained 120,000 primary lithium batteries. Under the exceptions in § 173.185(b), these batteries were not required to be tested in accordance with UN Manual of Tests and Criteria; the shipment was excepted from hazard communication requirements (*i.e.*, marking, labeling and shipping papers); and the packages were not required to meet the packaging design and performance testing requirements.

As a result of this incident, the National Transportation Safety Board (NTSB) issued five safety recommendations (a copy of the NTSB letter is in the public docket) to RSPA concerning the transportation of lithium batteries, as follows:

Recommendation A–99–80. With the Federal Aviation Administration, evaluate the fire hazards posed by lithium batteries in an air transportation environment and require that appropriate safety measures be taken to protect airplane and occupants. The evaluation should consider the testing requirements for lithium batteries in the United Nations' Transport of Dangerous Goods Manual of Tests and Criteria, the involvement of packages containing large quantities of tightly packed batteries in a cargo compartment fire, and the possible exposure of batteries to rough handling in an air transportation environment, including being crushed or abraded open.

Recommendation A–99–81. Pending completion of an evaluation of the fire hazards posed by lithium batteries in an air transportation environment, prohibit the transportation of lithium batteries on passenger-carrying aircraft.

Recommendation A–99–82. Require that packages containing lithium batteries be identified as hazardous materials, including appropriate marking and labeling of the packages and proper identification in shipping documents, when transported on aircraft.

Recommendation A–99–83. Pending completion of an evaluation of the fire hazards posed by lithium batteries in an air transportation environment, notify the International Civil Aviation Organization's Dangerous Goods Panel about the circumstances of the fire in the Northwest Airlines cargo facility at Los Angeles International Airport on April 28, 1999. Also pending completion of an evaluation of the fire hazards posed by lithium batteries in an air transportation environment, initiate action through the Dangerous Goods Panel to revise the Technical Instructions for the Safe Transportation of Dangerous Goods by Air to prohibit the transportation of lithium batteries on passenger-carrying aircraft.

Recommendation A–99–84. Initiate action through the Dangerous Goods Panel to revise the Technical Instructions for the Safe Transportation of Dangerous Goods by Air to require that packages containing lithium batteries be identified as hazardous materials when transported on aircraft.

In a letter dated March 29, 2000, responding to the NTSB recommendations, we informed NTSB that, in coordination with FAA, we would initiate a study to assess the hazards associated with the transportation of lithium batteries and cells on board aircraft and to recommend enhanced safety measures if found to be necessary. We also sought additional information from lithium battery manufacturers and Federal agencies with extensive experience with testing and the use of lithium batteries and cells. Finally, as we informed NTSB, we planned to conduct experimental evaluations necessary to obtain information not available from other sources for both primary and rechargeable lithium batteries and cells.

In our response to NTSB, we also stated we could not at that time justify an immediate prohibition on the transportation of lithium batteries on passenger-carrying aircraft, but that we would initiate alternative interim actions to address the risk lithium batteries present in transportation. These alternative actions included developing and distributing information aimed at shippers and airline personnel on the potential hazards of lithium batteries and amendments to both the international and domestic regulations. In addition, we committed to initiate additional rulemaking actions as necessary, based on the findings of our evaluation, to address the hazards of lithium batteries in transportation.

On July 7, 1999, RSPA published a public advisory to remind persons that batteries and electrical devices that contain batteries are forbidden for transport unless properly packaged to prevent the likelihood of creating sparks or generating dangerous heat (64 FR 36743). The FAA also published advisories to the airline industry on July 2, 1999, and again on May 23, 2002.

On April 2, 2002, RSPA published a notice of proposed rulemaking (NPRM; 67 FR 15510) to amend the HMR to: (1) Change the test methods for lithium batteries and cells; (2) revise the exceptions for small batteries and cells (*e.g.*, those of 1 gram or less of lithium content) including adding a requirement that all such batteries and cells be subject to new marking and paper work

[1] "Smaller" primary lithium battery is a battery that effectively has an aggregate lithium content of less 25 grans when fully charged.

requirements and to the test methods for lithium batteries and cells; (3) eliminate the exception for larger batteries and cells (*e.g.*, cells up to 5 grams of lithium content and batteries up to 25 grams of lithium content); and (4) provide an exception for aircraft passengers and crew. The proposals in the NPRM are consistent with amendments that have already been adopted into the UN Recommendations on the Transport of Dangerous Goods and the International Civil Aviation Organization's Technical Instructions for the Safe Transport of Dangerous Goods by Air.

B. FAA Technical Report on Primary Lithium Batteries

As part of DOT's re-evaluation of the hazards posed by lithium batteries in air transportation, FAA initiated a series of tests to assess the flammability characteristics of primary lithium batteries and published a technical report in June 2004 (DOT/FAA/AR/–04/26). This report, which can be found in the docket for this rulemaking, concluded that the presence of a shipment of primary lithium batteries can significantly increase the severity of an in-flight cargo compartment fire. More importantly, the report concluded that primary lithium batteries pose a unique threat in the cargo compartment of an aircraft because primary lithium fires cannot be suppressed by means of Halon 1301, the only FAA certified fire suppressant system permitted for use in cargo compartments of a passenger-carrying aircraft operating in the United States.

The FAA report describes tests conducted by the FAA Fire Safety Branch to assess the potential danger posed to passenger and cargo aircraft by fires involving shipments of bulk-packed primary lithium batteries. The report notes that primary lithium batteries shipped as cargo are packed in bulk-corrugated cardboard containers, stacked on pallets, and shipped in the cargo holds of passenger and cargo aircraft. More than 30,000 batteries may be shipped on a single pallet. The packaging permits close contact between individual batteries in each row with only thin cardboard separating the rows.

The report concludes that once a primary lithium battery begins to burn, the outer plastic coating of the battery easily melts and ignites, contributing to the fire intensity. This increased intensity helps raise the temperature of the surrounding batteries to the self-ignition temperature of lithium, 352 °F. Once the lithium in a single battery begins to burn, it releases enough energy to ignite adjacent batteries. This propagation continues until all batteries have been consumed.

Once ignited, primary lithium battery fires are difficult to combat. This is because lithium is highly reactive and has a relatively low self-ignition temperature. Thus, while Halon 1301 is effective in suppressing a fire associated with the surrounding packing material, it is not effective against the burning lithium batteries. Likewise, Halon 1301 may successfully suppress a fire that starts in the cargo compartment that is unrelated to lithium batteries. However, the air temperature in a cargo compartment may still be above the self-ignition temperature of lithium batteries. Because of this, lithium batteries that are not involved in the initial fire may still ignite and propagate.

The report concludes that the ignition of a primary lithium battery releases burning electrolytes and a molten lithium spray. The cargo liner material used to insulate cargo may be vulnerable to perforation by molten lithium depending on its thickness. If perforated, the cargo liner cannot prevent the Halon 1301 fire suppressant agent from leaking out of the compartment, reducing the agent concentration within the cargo compartment and, thus, the effectiveness of the agent. Additionally, holes in the cargo liner may allow flames to spread outside of the cargo compartment, spreading the fire to other portions of the aircraft.

Similarly, the report concludes that the ignition of primary lithium batteries create a pressure pulse that can raise the air pressure within the cargo compartment. Cargo compartments are only designed to withstand approximately a 1-psi pressure differential. Greater pressure differentials may compromise the integrity of the compartment by activating pressure relief panels. The study found that ignition of only a few batteries was sufficient to increase the air pressure by more than 1-psi in an airtight 10 meter cubed pressure vessel. This increase in pressure has the same effect as perforations in the cargo liner, allowing the Halon 1301 fire suppressant to leak out, reducing its effectiveness, and allowing the fire to spread beyond the cargo compartment.

C. Additional Incidents Continue to Occur

Since 1999, there have been several incidents involving lithium batteries in air transportation. At least four of those incidents involved primary lithium battery fires; one incident required medical treatment for two workers. All of these fires were discovered either just before or just after lithium batteries were transported on an aircraft in a cargo compartment. One of the more significant incidents is described below.

In April of 2002, airport personnel at the Indianapolis International Airport discovered a fire involving lithium batteries that had just arrived on a flight from Morgan Hill, California. The batteries had short-circuited inside their packaging. Airport personnel noticed the smoke coming from the container and isolated and extinguished the fire before it spread. Had the fire ignited sooner or had the flight been delayed by a short time, the fire could have spread in the cargo area of the aircraft while in the air. Although this incident occurred aboard a cargo-only aircraft, it just as easily could have occurred on a passenger-carrying flight.

The number of lithium batteries and cells being transported via aircraft appears to be steadily increasing, as is the lithium content of individual batteries and cells. Import statistics also show an increased demand for lithium batteries. Since 2001, primary lithium battery imports have increased more than 20%, from approximately 151 million units in 2001 to approximately 182 million units in 2003. See U.S. International Trade Commission DataWeb Import Statistics for Primary Cells and Primary Batteries, Lithium, Category 850650. With the growing consumer demand for portable powered devices that have increasing capacity to operate for long periods, more and more batteries that have very large reserves of electrical energy are being shipped. If not properly protected from short circuiting or prevented from accidental activation, these batteries can generate a large quantity of sparks and/or heat for an extended period.

D. Petition from the Air Line Pilots Association

On September 29, 2004 the Air Line Pilots Association, International (ALPA) petitioned RSPA to develop packaging standards for lithium primary batteries similar to those in place for other commodities that, in the event of a fire, including a suppressed cargo fire, would result in the loss of an aircraft. ALPA suggests that the packaging should not only be sufficient to protect the batteries from damage and short-circuiting, but also should be adequate to protect the batteries from self-ignition if exposed to the heat from a suppressed or unsuppressed cargo fire. ALPA further suggests that the severity of the safety problem requires immediate attention and that, if the packaging criteria cannot be met, bulk shipments

of lithium batteries should be prohibited on both passenger-carrying and cargo-only aircraft. ALPA also requested that DOT perform additional testing of lithium ion batteries and lithium batteries contained in equipment.

In its petition, ALPA references the recent RSPA rulemaking published under Docket HM–224B on May 6, 2004 (69 FR 25469), which proposed a requirement for oxygen cylinders to be overpacked in a packaging that would allow the cylinder to withstand a temperature of 400 °F for 3 hours. ALPA states that current packaging standards for lithium batteries provide no such protection against a suppressed cargo fire.

IV. Interim Final Rule

The incident reports and test data discussed above indicate that primary lithium batteries and cells shipped as cargo on passenger-carrying aircraft pose an immediate risk to the traveling public. This information shows that a primary lithium battery that is involved in a fire in a passenger aircraft cargo compartment could overcome the safety features of the cargo compartment; that if primary lithium batteries are not properly packaged or handled, they are capable of initiating a fire that could have catastrophic consequences. Therefore, in this interim final rule, RSPA is prohibiting the transportation as cargo of primary (non-rechargeable) lithium batteries and cells on passenger-carrying flights. We are implementing this restriction by reference to new Special Provisions A100, A101, and A102 in the hazmat table for the lithium battery entries. The current package quantity limitations for secondary lithium batteries have been moved unchanged to new Special Provisions A103 and A104. The action is this interim final rule are consistent with the policies of several airlines (*e.g.*, Northwest Airlines and KLM) who have already prohibited the transport of lithium batteries aboard their aircraft We are also prohibiting the transportation of equipment containing or packed with large primary lithium batteries as cargo (*i.e.* batteries greater than 25 grams) on passenger-carrying aircraft. These prohibitions apply to both domestic flights and international flights.

A. Cargo Aircraft

These prohibitions do not apply to shipments of primary lithium batteries and cells on a cargo-only aircraft. After careful consideration of past experiences with hazardous materials, recent incidents with lithium batteries, and NTSB safety recommendations, RSPA and FAA agree that the greatest risk to public safety is on passenger-carrying operations. While it is certainly possible that an incident involving a primary lithium battery may occur on a cargo-only aircraft, the risk to public safety is much lower.

Generally speaking, the characteristics of all-cargo aircraft provide options to pilots that would allow them to stop airflow to cargo compartments while the aircraft remains at a high altitude. Such action, especially at high altitude, would reduce the amount of oxygen available to a fire. Stopping or reducing the amount of oxygen to a compartment would help mitigate a fire. On a passenger aircraft, it would be more difficult to isolate airflow to a cargo compartment without also isolating air flow to the passenger compartment. The FAA confirmed that at least two major all-cargo air carriers already advise pilots to use these types of procedures to help respond to a fire.

B. Passengers Carrying Batteries in Carry-on or Checked Baggage

This interim final rule does not prohibit a passenger from transporting devices containing lithium batteries for personal use (such as laptop computers, cell phones, cameras, etc.) in carry-on or checked baggage nor does it restrict a passenger from transporting spare lithium batteries for personal use in carry-on or checked baggage.

Under this interim final rule, consumer electronics or medical devices containing a lithium battery, together with spare batteries for the device, are also permitted in checked baggage because it is not clear at this time to what extent the surrounding piece of equipment provides protection for the battery and prevents propagation. For each installed or spare cell or battery, the lithium content of the anode of each cell, when fully charged, may not exceed five grams, and the lithium content of the anodes of each battery, when fully charged, may not exceed 25 grams.

It is RSPA's belief that this interim final rule will have little or no effect on those personal electronic devices that passengers currently carry aboard passenger-carrying aircraft. RSPA and the FAA may consider this issue and others for future rulemaking action.

C. Batteries Shipped in or with Equipment

The prohibition in this interim final rule does not apply to the transportation as cargo on passenger aircraft of small primary lithium batteries that are shipped with or installed in equipment for which they are intended to provide power. The risk associated with shipment of primary lithium batteries in or with equipment is currently unclear. Studies conducted by the FAA and other government agencies focused only on shipments of primary lithium batteries, not on batteries contained in equipment. RSPA and the FAA will continue to study small lithium batteries shipped with equipment and will initiate additional actions as necessary.

Those primary lithium batteries or cells we are continuing to allow to be transported as cargo aboard passenger-carrying aircraft when packed with or in equipment must: (1) comply with the requirements and limitations of § 173.185(b)(1), (b)(2), (b)(3), (b)(4) and (b)(6) or § 173.185(c)(1), (c)(2), (c)(3) and (c)(5); (2) the battery or cell or equipment containing the battery or cell, as appropriate, must be packed in strong packagings; (3) the package contains no more than the number of primary lithium batteries or cells necessary to power the intended piece of equipment; and (4) the total net weight of the primary lithium batteries in the package does not exceed 5 kg. Further, these types of lithium batteries are only allowed to be transported aboard passenger-carrying aircraft when packed with the piece of equipment for which they are intended to provide power.

The provisions in § 173.185(b) and § 173.185(c) deal, in part, with the size of the lithium battery or cell and require that the cell or battery be hermetically sealed and that the batteries and cells be packed to prevent short circuiting. Concerning size limitations, § 173.185(c)(1) restricts the lithium content of the anode of each cell, when fully charged, to not more than five grams and the aggregate lithium content of the anodes of each battery, when fully charged, to not more than 25 grams.

D. Secondary Lithium (Rechargeable/ Lithium Ion) Batteries and Cells

FAA and RSPA have similar concerns with lithium (rechargeable/lithium ion) batteries in that they appear to have similar self-ignition characteristics as primary lithium cells and batteries when subjected to thermal and physical abuse conditions. However, the risks associated with the shipment of secondary (rechargeable/lithium ion) lithium batteries, particularly with respect to their ability to burn in an atmosphere containing Halon, are currently unclear. Studies conducted by the FAA focused only on shipments of primary lithium batteries, not secondary (rechargeable) lithium batteries. RSPA and the FAA will continue to study the

hazards associated with the transportation of secondary lithium batteries and we will initiate additional actions as necessary.

E. Marking of Packages

As noted previously, § 173.185 provides exceptions from the packaging and hazard communication requirements in the HMR for smaller lithium batteries and cells. When the lithium content of the battery or cell does not exceed certain limits, the batteries and cells must be packaged in strong outer packagings and in a manner to protect against short circuit; however, such shipments are excepted from all other HMR requirements. Without an appropriate marking, carriers will be unaware of the presence of primary lithium batteries and cells in these types of packagings and may inadvertently transport primary lithium batteries and cells aboard passenger-carrying aircraft. Therefore, in this interim final rule, we are revising these exceptions to require that excepted packages of primary lithium batteries and cells, when transported by highway, rail, vessel and cargo aircraft, be marked ''Primary Lithium batteries-Forbidden for transport aboard passenger aircraft''.

F. Exemptions and Approvals

RSPA has issued a number of Competent Authority Approvals and exemptions that authorize the transportation of certain lithium batteries on passenger-carrying aircraft. Consistent with the prohibitions imposed by this interim final rule, any existing approval or exemption that authorizes the shipment of primary lithium batteries on passenger-carrying aircraft, may no longer make use of that provision. An approval or exemption authorizing the shipment of lithium batteries on cargo-only aircraft, motor vehicles, rail cars or vessels may continue to be used.

G. Prohibitions Apply to International Flights

Annex 18 to the Convention on International Civil Aviation (Annex 18) addresses the safe transport of dangerous goods by air. The International Civil Aviation Organization (ICAO) publishes Technical Instructions for the Safe Transport of Dangerous Goods by Air. These Technical Instructions are recognized by contracting states as a set of international shipping standards. In the United States, 49 CFR 171.11 establishes limits on the use of the Technical Instructions by shippers and air operators. Section 2.5.1 of Annex 18 addresses state variations and indicates, ''Where a Contracting State adopts different provisions from those specified in the Technical Instructions, it shall notify ICAO promptly of each State variation for publication in the Technical Instructions.'' United States Variation number 1 is published in the Technical Instructions and indicates, in part, ''Transport of Dangerous Goods by air must be in accordance with United States'' Regulations (49 CFR 171–180) or the Technical Instructions as limited by 49 CFR 171.11.'' The new limits described, in part, by § 171.11 (d) (18) in this Interim Final Rule establish that the authority outlined in the Technical Instructions may not be used to transport the affected lithium batteries and cells by passenger aircraft into, out of, or within the United States.

V. Justification for Interim Final Rule

We are issuing this interim final rule without providing an opportunity for prior public notice and comment as is normally required by the Administrative Procedure Act (APA). *See* 5 U.S.C. 553. The APA authorizes agencies to dispense with certain notice and comment procedures if the agency finds good cause that notice and public procedure thereon are impracticable, unnecessary, or contrary to the public interest. *See* 5 U.S.C. 553(b)(3)(B). ''Good cause'' exists in situations when notice unavoidably prevents the due and required execution of agency functions or when an agency finds that due and timely execution of its functions are impeded by the notice otherwise required by the APA. See Administrative Procedure Act: Legislative History, S. Doc. No. 248 79–200 (1946); United States Department of Justice, Attorney General's Manual on the Administrative Procedure Act at 30–31 (1947). The Attorney General's Manual on the Administrative Procedure Act gives an example of an ''impracticable'' good cause situation where air safety rules should be amended without delay if the FAA determines that the safety of the traveling public is at stake. See United States Department of Justice, Attorney General's Manual on the Administrative Procedure Act at 30–31 (1947).

This action meets the good cause exception because of recent evidence that primary lithium batteries and cells shipped as cargo on passenger-carrying aircraft pose an immediate risk to the traveling public. This action is further supported by the fact that there has been several incidents involving lithium batteries in air transportation since 1999, and there have been several serious fires in the past five years, where if circumstances had been slightly different, it is very likely that there would be a significant risk to the safety of the flying public with potentially disastrous consequences. In these situations, if the primary lithium battery cargo had been on a passenger carrying aircraft and the fire occurred a short time later or had not been noticed, there could have been significant loss of life.

The Regulatory Policies and Procedures of DOT (44 FR 110034; February 26, 1979) provide that, to the maximum extent possible, DOT operating administrations should provide an opportunity for public comment on regulations issued without prior notice. Accordingly, we encourage persons to participate in this rulemaking by submitting comments containing relevant information, data, or views. We also invite comments by February 14, 2005 concerning the costs and benefits that may result from the provisions of this interim final rule and particularly the costs that may be incurred by small businesses. We also plan to hold a public meeting before the end of the comment period to hear comments and concerns related to the provisions of this IFR. We expect that the information provided at a public meeting will better enable us to address those concerns and, if necessary, respond rapidly to the need for any modifications to this IFR. We will consider all comments received on or before the closing date for comments. We will consider late-filed comments to the extent practicable. This interim final rule may be amended based on comments received.

VI. Justification for Effective Date Less than 30 Days

This interim final rule is effective fourteen days after publication in the **Federal Register**. The APA requires agencies to delay the effective date of regulations for 30 days after publication, unless the agency finds good cause to make the regulations effective sooner. See 5 U.S.C. 553(d). This interim final rule meets the good cause exception in this instance because of the potential catastrophic consequences should a fire occur in the cargo area of a passenger-carrying aircraft that involves primary lithium batteries. As discussed above, warning signs are clearly evident with several recent close calls, that primary lithium batteries and cells are capable of causing a catastrophic incident. It is imperative that the Department act now to prohibit the shipment of primary lithium batteries and cells on passenger-carrying aircraft. Because some shipments of batteries and cells are already en-route and it may be impossible to immediately identify,

remove, re-mark and re-route cargo currently aboard passenger-carrying aircraft, we are delaying the effective date of this interim final rule for fourteen days, so that primary lithium battery cargo shipments can be identified, properly marked and re-routed. This rule does not apply to those shipments that originated prior to the effective date. Shipments that originated prior to the effective date of the rule, but which will not reach their destination until after the effective date of this rule are not required to be re-routed to avoid passenger-carrying aircraft.

VII. Rulemaking Analysis and Notices

A. Statutory/Legal Authority for This Rulemaking

This interim final rule is published under authority of Federal hazardous materials transportation law (Federal hazmat law; 49 U.S.C. 5101 *et seq.*) and 49 U.S.C. 44701. Section 5103(b) of Federal hamat law authorizes the Secretary of Transportation to prescribe regulations for the safe transportation, including security, of hazardous material in intrastate, interstate, and foreign commerce. Title 49 United States Code § 44701 authorizes the Administrator of the Federal Aviation Administration to promote safe flight of civil aircraft in air commerce by prescribing regulations and minimum standards for practices, methods, and procedure the Administrator finds necessary for safety in air commerce and national security. Under 49 U.S.C. 40113, the Secretary of Transportation has the same authority to regulate the transportation of hazardous material by air, in carrying out § 44701, that he has under 49 U.S.C. 5103.

B. Executive Order 12866 and DOT Regulatory Policies and Procedures

The Department has determined that the transportation of primary lithium batteries and cells on-board passenger-carrying aircraft presents an immediate safety threat. Therefore, this rule is issued to address an emergency situation within the meaning of Section 6(a)(3)(D) of Executive Order 12866. Under Section 6(a)(3)(D), in emergency situations, an agency must notify OMB as soon as possible and, to the extent practicable, comply with subsections (a)(3)(B) and (C) of Section 6 of E.O. 12866. The Department has notified and consulted with OIRA/OMB on this interim final rule. We are preparing an assessment of potential costs and benefits resulting from this regulatory action. RSPA welcomes public comments on potential costs and benefits of this regulatory action.

Under the Department of Transportation's Regulatory Policies and Procedures (44 FR 11034), this rule is considered to be an emergency regulation. The Department has determined that an immediate safety threat exists in the transportation of primary lithium batteries and cells on board passenger aircraft and, therefore, this rule is considered to be an emergency regulation. Because of the need to move quickly to remove primary lithium batteries and cells from transportation on passenger aircraft, it would be impractical, unnecessary and contrary to the public interest to follow the usual procedures under the DOT order.

RSPA and FAA conducted a preliminary analysis of the impact of this interim final rule on current shipments of lithium batteries into and within the United States. Although this rule will clearly require some re-routing of lithium battery shipments, indications are that the overall impact will be limited due to the capacity of all-cargo flights into and within the United States. In addition, lithium batteries may also be shipped by other modes of transport.

RSPA and the FAA estimate that the economic impact of this Interim Final Rule to be less than $2 million for the first year, and less than that amount thereafter. This estimate is based on FAA conversations with industry, available primary lithium battery industry data, and air cargo industry data.

We were unable to identify a source that provides a definitive number of primary lithium batteries or the value of such batteries for the U.S. domestic market. Therefore, we estimated the domestic annual primary lithium battery market to be valued at $540 million. This estimate is based on doubling Department of Commerce import and export statistics for primary lithium batteries. Commerce reported that 244 million batteries valued at approximately $270 million are either imported or exported annually. Given that Commerce reports many more primary lithium batteries are imported, rather than exported, it is likely the domestic market is smaller than the international market and therefore, the estimate of $540 million is probably high.

Based on conversations with various lithium battery industry members, the FAA estimates that domestically, approximately 20% of lithium batteries are shipped via air and 80% are shipped via other modes of transportation. Assuming 20% of the primary lithium battery market (that is shipped by air) is affected by this rule, the annual dollar value of batteries potentially affected by this rule is approximately $108 million (20% of $540 million).

According to data compiled by the FAA, 25% of all air cargo is shipped on passenger aircraft, with 75% sent on all cargo aircraft. Therefore, assuming 25% of the primary lithium batteries sent by air are affected by this rule (75% sent by other modes are not affected), the annual dollar value of primary lithium batteries affected by this rule is approximately $27 million (25% of $108 million).

The FAA also assumes that only the shipping costs of a battery is affected by this rule, not the total value of a battery. Based on conversations with industry, shipping costs for primary lithium batteries is approximately 3% of total cost. Assuming a 3% shipping cost affected by this rule, the annual dollar value is reduced to approximately $810,000 (3% of $27 million).

The FAA estimates this cost to be high because preliminary discussions with industry indicate that some industry members send primary lithium batteries by cargo only aircraft. In addition, discussions with some airlines that have a separate cargo only fleet, indicate that shipping costs are the same for items shipped on a passenger carrying aircraft and a cargo only aircraft.

The FAA also assumes some cost for the marking requirement in this rule. While some cost is expected, this may be diminished because not every package of primary lithium batteries will require a marking, instead one label can be used for a package that contains a number of lithium batteries. In addition, this rule does not apply to primary lithium batteries that are already in the stream of commerce at the time of this rule, so shippers will not have to locate, label, and re-route shipments.

For primary lithium batteries imported to the U.S., the Official Airline Guide reports over 3,000 all-cargo aircraft flights entering the United States each month. A comparison of U.S. primary lithium battery trading partners with the schedule of all-cargo aircraft flights indicates an abundance of all-cargo capacity. For example, approximately 56 percent of all primary lithium battery imports are shipped from Japan, and there are over 300 scheduled all-cargo flights from Japan to the United States each month. Approximately 12 percent of all primary lithium battery imports are shipped from China, and there are over 152 scheduled all-cargo flights from China to the United States each month. In

addition, all-cargo flights from the United States serve major airport hubs world-wide from which cargo such as primary lithium batteries could be transshipped to their ultimate destination. Most importantly, discussions with industry indicate that the current air cargo infrastructure provides all cargo service to virtually every location in the world. Because certain items, including certain hazardous material, are prohibited from passenger aircraft, all cargo service already provides cargo only service to every location in the world. This is accomplished in part by ''feeder'' flights, contracted to local operators to reach remote locations.

While various lithium batteries are not affected by this interim final rule, such as lithium ion batteries, lithium batteries shipped in or with electronic devices, or lithium batteries carried by passengers, interested persons should be aware that the Department may initiate additional regulatory actions in the future to address these topics and others in all modes of transport.

C. Executive Order 13132

This final rule has been analyzed in accordance with the principles and criteria contained in Executive Order 13132 (''Federalism''). This rule preempts State, local, and Indian tribe requirements but does not impose any regulation that has substantial direct effects on the States, the relationship between the national government and the States, or the distribution of power and responsibilities among the various levels of government. Therefore, the consultation and funding requirements of Executive Order 13132 do not apply.

The Federal hazardous materials transportation law, 49 U.S.C. 5101–27, contains express preemption provisions (49 U.S.C. 5125) that preempt inconsistent State, local, and Indian tribe requirements, including requirements on the following subjects:

(1) The designation, description, and classification of hazardous materials;

(2) The packing, repacking, handling, labeling, marking, and placarding of hazardous materials;

(3) The preparation, execution, and use of shipping documents related to hazardous materials and requirements related to the number, contents, and placement of those documents;

(4) The written notification, recording, and reporting of the unintentional release in transportation of hazardous material; or

(5) The design, manufacture, fabrication, marking, maintenance, recondition, repair, or testing of a packaging or container represented, marked, certified, or sold as qualified for use in transporting hazardous material.

This rule addresses subject items (1), and (2) described above and, accordingly, State, local, and Indian tribe requirements on these subjects that do not meet the ''substantively the same'' standard will be preempted.

Federal hazardous materials transportation law provides at § 5125(b)(2) that, if DOT issues a regulation concerning any of the covered subjects, DOT must determine and publish in the **Federal Register** the effective date of Federal preemption. The effective date may not be earlier than the 90th day following the date of issuance of a final rule and not later than two years after the date of issuance. The effective date of Federal preemption is 90 days from publication of this interim final rule in this matter in the **Federal Register**.

D. Executive Order 13175

This final rule has been analyzed in accordance with the principles and criteria contained in Executive Order 13175 (''Consultation and Coordination with Indian Tribal Governments''). Because this final rule does not have tribal implications and does not impose direct compliance costs, the funding and consultation requirements of Executive Order 13175 do not apply.

E. Regulatory Flexibility Act and Executive Order 13272

Section 603 of the Regulatory Flexibility Act (RFA) requires an agency to prepare an initial regulatory flexibility analysis describing impacts on small entities whenever an agency is required by 5 U.S.C. § 553 to publish a general notice of proposed rulemaking for any proposed rule. Similarly, section 604 of the RFA requires an agency to prepare a final regulatory flexibility analysis when an agency issues a final rule under 5 U.S.C. 553 after being required to publish a general notice of proposed rulemaking. Because we have determined that there is an immediate safety threat and that primary lithium batteries and cells must be quickly removed from transportation on passenger aircraft, prior notice and comment would be contrary to the public interest. As prior notice and comment under 5 U.S.C. 553 are not required to be provided in this situation, the analyses in 5 U.S.C. sections 603 and 604 are not required.

F. Unfunded Mandates Reform Act of 1995

This rule does not impose unfunded mandates under the Unfunded Mandates Reform Act of 1995. It does not result in costs of $120.7 million or more, in the aggregate, to any of the following: State, local, or Native American tribal governments, or the private sector.

G. Paperwork Reduction Act

There are no new information collection requirements in this final rule.

H. Regulation Identifier Number (RIN)

A regulation identifier number (RIN) is assigned to each regulatory action listed in the Unified Agenda of Federal Regulations. The Regulatory Information Service Center publishes the Unified Agenda in April and October of each year. The RIN number contained in the heading of this document may be used to cross-reference this action with the Unified Agenda.

I. Environmental Assessment

The National Environmental Policy Act of 1969 (NEPA), as amended (42 U.S.C. 4321–4347), requires Federal agencies to consider the consequences of major federal actions and prepare a detailed statement on actions significantly affecting the quality of the human environment. This interim final rule prohibits primary lithium batteries and cells as cargo aboard passenger-carrying aircraft, thereby reducing the risk of fire aboard passenger-carrying aircraft and any resulting environmental damage. We find that there are no significant environmental impacts associated with this interim final rule.

J. Privacy Act

Anyone is able to search the electronic form for all comments received into any of our dockets by the name of the individual submitting the comments (or signing the comment, if submitted on behalf of an association, business, labor union, etc.). You may review DOT's complete Privacy Act Statement in the **Federal Register** published on April 11, 2000 (Volume 65, Number 70; Pages 19477–78) or you may visit ''*http://dms.dot.gov*''.

List of Subjects

49 CFR Part 171

Exports, Hazardous materials transportation, Hazardous waste, Imports, Incorporation by reference, Reporting and recordkeeping requirements.

49 CFR Part 172

Education, Hazardous materials transportation, Hazardous waste, Labeling, Markings, Packaging and

containers, Reporting and recordkeeping requirements.

49 CFR Part 173

Hazardous materials transportation, Packaging and containers, Radioactive materials, Reporting and recordkeeping requirements, Uranium.

49 CFR Part 175

Air carriers, Hazardous materials transportation, Radioactive materials, Reporting and recordkeeping requirements.

■ In consideration of the foregoing, 49 CFR Chapter I is amended as follows:

PART 171—GENERAL INFORMATION, REGULATIONS, AND DEFINITIONS

■ 1. The authority citation for part 171 continues to read as follows:

Authority: 49 U.S.C. 5101–5127, 44701; 49 1.45 and CFR 1.53; Pub L. 101–410 section 4 (28 U.S.C. 2461); Pub. L. 104–134, section 31001.

■ 2. In § 171.11, paragraph (d)(18) is added to read as follows:

§ 171.11 Use of ICAO Technical Instructions.

* * * * *

(d) * * *

(18) Primary lithium batteries and cells are forbidden for transportation aboard passenger-carrying aircraft. Equipment containing or packed with primary lithium batteries or cells are forbidden from transport aboard passenger-carrying aircraft except as provided in § 172.102, Special Provision A101 or A103, of this subchapter. Except for primary lithium batteries and cells that are contained in or packed with equipment, packagings containing primary lithium batteries and cells that meet the exceptions in § 173.185(b) and (c) of this subchapter must be marked ''PRIMARY LITHIUM BATTERIES—FORBIDDEN FOR TRANSPORT ABOARD PASSENGER AIRCRAFT'' and may be transported aboard cargo-only aircraft.

■ 3. In § 171.12, paragraph (b)(22) is added to read as follows:

§ 171.12 Import and export shipment.

* * * * *

(b) * * *

(22) Except for primary lithium batteries and cells, packagings containing primary lithium batteries and cells that meet the exceptions in § 173.185(b) and (c) of this subchapter must be marked ''PRIMARY LITHIUM BATTERIES—FORBIDDEN FOR TRANSPORT ABOARD PASSENGER AIRCRAFT''.

* * * * *

■ 4. In § 171.12a, paragraph (b)(12) is added to read as follows:

§ 171.12a Canadian shipments and packagings.

* * * * *

(b) * * *

(12) Except for primary lithium batteries and cells, packagings containing primary lithium batteries and cells that meet the exceptions in § 173.185(b) and (c) of this subchapter must be marked ''PRIMARY LITHIUM BATTERIES—FORBIDDEN FOR TRANSPORT ABOARD PASSENGER AIRCRAFT''.

* * * * *

PART 172—HAZARDOUS MATERIALS TABLE, SPECIAL PROVISIONS, HAZARDOUS MATERIALS COMMUNICATIONS, EMERGENCY RESPONSE INFORMATION, AND TRAINING REQUIREMENTS

■ 5. The authority citation for part 172 is revised to read as follows:

Authority: 49 U.S.C. 5101–5127, 44701; 49 CFR 1.53.

§ 172.101 [Amended]

■ 6. In § 172.101, in the Hazardous Materials Table, the following changes are made:

a. For the entry ''Lithium batteries, contained in equipment'', in Column (7), Special Provisions ''A102, A104'' are added and Column (9A) is revised to read ''See A102, A104''.

b. For the entry ''Lithium batteries packed with equipment'', in Column (7), Special Provisions ''A101, A103'' are added and Column (9A) is revised to read ''See A101, A103''.

c. For the entry ''Lithium battery'', in Column 7, Special Provision ''A100'' is added and Column (9A) is revised to read ''See A100''.

■ 7. In § 172.102, in paragraph (c)(1), Special Provision 134 and 157 are revised and in paragraph (c)(2) Special Provisions A100, A101, A102, A103, and A104 are added to read as follows:

§ 172.102 Special provisions.

* * * * *

(c) * * *

(1) * * *

Code/Special Provisions

* * * * *

134 This entry only applies to vehicles, machinery and equipment powered by wet batteries, sodium batteries, or lithium batteries that are transported with these batteries installed. Examples of such items are electrically-powered cars, lawn mowers, wheelchairs, and other mobility aids. Self-propelled vehicles that also contain an internal combustion engine must be consigned under the entry ''Vehicle, flammable gas powered'' or ''Vehicle, flammable liquid powered'', as appropriate. Except as provided in Special Provision A102, vehicles, machinery and equipment powered by primary lithium batteries that are transported with these batteries installed are forbidden aboard passenger-carrying aircraft.

* * * * *

157 This entry includes hybrid electric vehicles powered by both an internal combustion engine and wet, sodium or lithium batteries installed. Vehicles containing an internal combustion engine must be consigned under the entry ''Vehicle, flammable gas powered'' or ''Vehicle, flammable liquid powered'', as appropriate. Except as provided in Special Provision A102, vehicles powered by primary lithium batteries, that are transported with these batteries installed are forbidden aboard passenger-carrying aircraft.

* * * * *

(2) * * *

A100 Primary (non-rechargeable) lithium batteries and cells are forbidden for transport aboard passenger carrying aircraft. Secondary (rechargeable) lithium batteries and cells are authorized aboard passenger carrying aircraft in packages that do not exceed a gross weight of 5 kg.

A101 A primary (non-rechargeable) lithium battery or cell packed with equipment is forbidden for transport aboard a passenger carrying aircraft unless:

a. The battery or cell complies with the requirements and limitations of § 173.185(b)(1), (b)(2), (b)(3), (b)(4) and (b)(6) or § 173.185(c)(1), (c)(2), (c)(3) and (c)(5) of this subchapter;

b. The package contains no more than the number of lithium batteries or cells necessary to power the intended piece of equipment;

c. The equipment and the battery or cell are packed in a strong packaging;

d. The gross weight of the package does not exceed 5 kg. Packages complying with the requirements of this special provision are excepted from all other requirements of this subchapter.

A102 A primary (non-rechargeable) lithium battery or cell contained in equipment is forbidden for transport aboard a passenger carrying aircraft unless:

a. The battery or cell complies with the requirements and limitations of § 173.185(b)(1), (b)(2), (b)(3), (b)(4) and (b)(6) or § 173.185(c)(1), (c)(2), (c)(3) and (c)(5) of this subchapter;

b. The package contains no more than the number of lithium batteries or cells

necessary to power the intended piece of equipment;

c. The equipment containing the battery or cell is packed in strong packagings; and

d. The net weight of the package does not exceed 5 kg. Packages complying with the requirements of this special provision are excepted from all other requirements of this subchapter.

A103 A secondary (rechargeable) lithium battery or cell packed with equipment is authorized aboard passenger carrying aircraft in packages that do not exceed a gross weight of 5 kg.

A104 A secondary (rechargeable) lithium battery or cell packed in equipment is authorized aboard passenger carrying aircraft in packages that do not exceed a net weight of 5 kg.

* * * * *

PART 173—SHIPPERS—GENERAL REQUIREMENTS FOR SHIPMENTS AND PACKAGINGS

■ 8. The authority citation for part 173 continues to read as follows:

Authority: 49 U.S.C. 5101–5127, 44701; 49 CFR 1.45, 1.53.

■ 9. In § 173.4, paragraph (d) is added to read as follows:

§ 173.4 Small quantity exceptions.

* * * * *

(d) Lithium batteries and cells are not eligible for the exceptions provided in this section.

■ 10. In § 173.185, the introductory text of paragraph (b) is revised, paragraph (b)(5) is redesignated as paragraph (b)(6), and new paragraph (b)(5) is added; then the introductory text of paragraph (c) is revised, paragraph (c)(4) is redesignated as paragraph (c)(5), and new paragraph (c)(4) is added; and paragraph (d) is revised to read as follows:

§ 173.185 Lithium batteries and cells.

* * * * *

(b) *Exceptions.* Except for primary (non-rechargeable) lithium batteries and cells transported aboard passenger-carrying aircraft, cells and batteries are not subject to any other requirements of this subchapter if they meet the following:

* * * * *

(5) The outside of each package that contains a primary (non-rechargeable) lithium battery or cell must be marked ''PRIMARY LITHIUM BATTERIES—FORBIDDEN FOR TRANSPORT ABOARD PASSENGER AIRCRAFT'' on a background of contrasting color, in letters:

(i) At least 12 mm (0.5 inch) in height on packages having a gross mass of more than 30 kg (66 pounds); or

(ii) At least 6 mm (0.25 inch) on packages having a gross mass of 30 kg (66 pounds) or less; and

* * * * *

(c) Except for primary lithium (non-rechargeable) batteries and cells transported aboard passenger-carrying aircraft, cells and batteries are not subject to any other requirements of this subchapter if they meet the following:

* * * * *

(4) The outside of each package that contains a primary (non-rechargeable) lithium battery or cell must be marked ''PRIMARY LITHIUM BATTERIES—FORBIDDEN FOR TRANSPORT ABOARD PASSENGER AIRCRAFT'' on a background of contrasting color, in letters:

(i) At least 12 mm (0.5 inch) in height on packages having a gross mass of more than 30 kg (66 pounds); or

(ii) At least 6 mm (0.25 inch) on packages having a gross mass of 30 kg (66 pounds) or less; and

* * * * *

(d) Except for transportation aboard passenger-carrying aircraft, cells and batteries and equipment containing cells and batteries that were first transported prior to January 1, 1995, and were assigned to Class 9 on the basis of the requirements of this subchapter in effect on October 1, 1993, may continue to be transported in accordance with the applicable requirements in effect on October 1, 1993.

* * * * *

■ 11. In § 173.220, paragraphs (d), (e) and (f) are redesignated as paragraphs (e), (f) and (g) and new paragraph (d) is added to read as follows:

§ 173.220 Internal combustion engines, self-propelled vehicles, mechanical equipment containing internal combustion engines, and battery powered vehicles and equipment.

* * * * *

(d) *Lithium batteries.* Except as provided in § 172.102, Special Provision A102, of this subchapter, vehicles and machinery powered by primary lithium batteries that are transported with these batteries installed are forbidden aboard passenger-carrying aircraft. Lithium batteries contained in vehicles or engines must be securely fastened in the battery holder of the vehicle or engine, and be protected in such a manner as to prevent damage and short circuits. Lithium batteries must be of a type that have successfully passed each test in the UN Manual of Tests and Criteria as specified in § 173.185, unless approved by the Associate Administrator. Equipment, other than vehicles or engines, containing lithium batteries must be transported in accordance with § 173.185.

* * * * *

PART 175—CARRIAGE BY AIRCRAFT

■ 12. The authority citation for part 175 is revised to read as follows:

Authority: 49 U.S.C. 5101–5127, 44701; 49 CFR 1.53.

■ 13. In § 175.10, paragraph (a)(27) is added to read as follows:

§ 175.10 Exceptions.

(a) * * *

(27) Except as provided in § 173.21 of this subchapter, consumer electronic and medical devices (watches, calculators, cameras, cellular phones, lap-top computers, camcorders, and hearing aids, etc.) containing lithium cells or batteries, and spare lithium batteries and cells for these devices, when carried by passengers or crew members in carry-on or checked baggage for personal use. In addition, each installed or spare battery must conform to the following:

(i) The lithium content of the anode of each cell, when fully charged, is not more than 5 g; and

(ii) The aggregate lithium content of the anodes of each battery, when fully charged, is not more than 25 g.

* * * * *

Issued in Washington, DC, on December 10, 2004 under authority delegated in 49 CFR Part 1.

Samuel G. Bonasso,

Deputy Administrator.

[FR Doc. 04–27423 Filed 12–10–04; 1:59 pm]

BILLING CODE 4910–60–P

Federal Register

Wednesday,
December 15, 2004

Part VI

Department of Labor

Office of the Secretary

Research Misconduct; Statement of Policy; Technical Correction; Notice

DEPARTMENT OF LABOR

Office of the Secretary

Research Misconduct; Statement of Policy; Technical Correction

AGENCY: Office of the Secretary, Labor.

ACTION: Statement of policy on research misconduct; technical correction.

SUMMARY: On Friday, September 12, 2003 (**Federal Register**/Vol. 68, No. 177) USDOL published its policies implementing the Federal Policy on Research Misconduct issued by the Executive Office of the President's Office of Science and Technology on December 6, 2000. Following public comment, and in order to eliminate a possible ambiguity in the USDOL policy statement, the USDOL hereby publishes this technical correction to its policy statement on research misconduct. Though this technical correction changes only two words in the September 12, 2003 USDOL policy statement on research misconduct, the USDOL is hereby publishing the entire USDOL Policy statement.

FOR FURTHER INFORMATION CONTACT: Ruth M. Samardick, Office of Programmatic Policy, Office of the Assistant Secretary for Policy, U.S. Department of Labor at 202–693–5075.

SUPPLEMENTARY INFORMATION: The Office of Science and Technology Policy issued a final Federal research misconduct policy on December 6, 2000 in 65 FR 76260–76264 (the ''Federal Policy''). The Federal Policy consists of a definition of research misconduct and basic guidelines to help Federal agencies and Federally funded research institutions respond to allegations of research misconduct.

The U.S. Department of Labor (USDOL) is publishing its policies on research misconduct fully consistent with the Federal Policy. This is a policy statement intended as a guide to USDOL managers and supervisors. It is not intended to provide any binding requirements on Department of Labor agencies, officials, or the public. It is not intended to create or recognize any legally enforceable right in any person. We refer to the USDOL policy as the ''USDOL Policy.''

The Federal Policy provides a uniform Federal definition of research misconduct. It defines research misconduct as fabrication, falsification, or plagiarism in proposing, performing, or reviewing research or reporting research results. The Federal Policy also defines ''fabrication,'' ''falsification,'' and ''plagiarism.'' The USDOL Policy adopts the definition of research misconduct set forth in the Federal Policy.

Consistent with the Federal Policy, USDOL officials should, as appropriate, seek to protect research misconduct investigative and adjudicative files from mandatory disclosure under the Freedom of Information Act, where permitted by law and regulation.

The Department of Labor Manual Series (DLMS) 8, Audits and Investigations, Chapter 700—Incident Reporting and Whistleblower Protection, establishes USDOL procedures and assigns responsibility for reporting and investigating allegations of wrongdoing that would include allegations of research misconduct. The USDOL Policy presented below does not supersede DLMS 8, Chapter 700, but is designed to provide supplementary policies for research misconduct issues.

Authority: 5 U.S.C. 301 and **Federal Register**/Vol. 65 No. 235, December 6, 2000, Notification of Final Policy, Executive Office of the President, Office of Science and Technology Policy.

Definitions

(1) The ''Federal Policy'' means the Federal research misconduct policy issued by the Office of Science and Technology Policy on December 6, 2000 in 65 FR 76260–76264.

(2) ''Research misconduct'' means conduct which a preponderance of the evidence demonstrates to be a significant departure from accepted practices and intentional, knowing, or reckless fabrication, falsification, or plagiarism in proposing, performing, or reviewing research or reporting research results. Research misconduct does not include honest error or differences of opinion.

(a) ''Fabrication'' means making up data or results and recording or reporting them.

(b) ''Falsification'' means manipulating research materials, equipment, or processes, or changing or omitting data or results such that the research record is not accurately represented in the research record.

(c) ''Plagiarism'' means the appropriation of another person's ideas, processes, results or words without giving appropriate credit.

(3) ''USDOL'' means the United States Department of Labor as an entity, or to any agency of the United States Department of Labor acting under the authority of the United States Department of Labor, with the exception of the Office of Inspector General of the United States Department of Labor.

(4) ''Appropriate USDOL Agency'' means the USDOL agency that has supported or contracted for the research that involves an allegation of research misconduct.

(5) ''OIG'' means the Office of Inspector General of the United States Department of Labor.

(6) ''Agency Head'' (AH) means the director of a USDOL agency that has the authority to or has been delegated the authority to commit USDOL support for research or to purchase research services or products for the USDOL or one of its agencies.

(7) ''Awardee Institution'' means an institution or organization that has received research support from a USDOL agency or that has received a contract or grant to provide research services or products to a USDOL agency.

(8) ''The USDOL Policy'' means the policy and procedures issued by the USDOL to deal with allegations of research misconduct involving research supported by or contracted for by a USDOL agency.

General Policies

(1) USDOL agencies support research activities through grants or other agreements to provide research support. USDOL agencies also purchase research services and products through contracts and purchase orders.

(2) USDOL should take appropriate action against individuals or institutions upon a finding that research misconduct has occurred while conducting or performing research that has been supported by a USDOL agency or that has been contracted for by a USDOL agency.

(3) Allegations of research misconduct against employees of USDOL while in the performance of their official duties are covered by existing laws, rules, regulations and Departmental policy relating to misconduct of its employees, and not by ''The USDOL Policy,'' but in cases involving alleged research misconduct against DOL employees while in the performance of their official duties, DOL officials should apply these laws, rules, regulations and Departmental policy in a manner consistent with the ''Federal Policy.''

(4) USDOL officials should issue a finding of research misconduct only after a careful inquiry and investigation by (a) an awardee institution, (b) by another Federal agency, (c) by the OIG, or (d) by the Appropriate USDOL Agency. An inquiry consists of preliminary information-gathering and preliminary fact-finding to determine whether an allegation or apparent instance of research misconduct has substance and if an investigation is warranted. An investigation should ordinarily be undertaken if the inquiry

determines the allegation or apparent instance of research misconduct has substance. An investigation is a formal development, examination and evaluation of a factual record to determine whether research misconduct has taken place, to assess its extent and consequences, and to evaluate appropriate action.

Pending Proposals and Awards

(1) Upon learning of alleged research misconduct the appropriate USDOL Agency should take steps to identify potentially implicated awards or proposals and, when appropriate, should ensure that program, grant, and contract officers handling them are informed.

(2) Neither a suspicion nor allegation of research misconduct nor a pending inquiry or investigation will normally delay review of proposals. Not informing reviewers or panelists of allegations or of ongoing inquiries or investigations will avoid inappropriate influence on their reviews. However, if allegations, inquiries, or investigations have been rumored or publicized, the responsible Agency Head, after consultations with the USDOL Office of Solicitor and the appropriate USDOL contract and grant officers, should consider appropriate steps to avoid inappropriate influence. They might, for example, defer review, inform reviewers to disregard the matter, or inform reviewers of the status of the matter.

Initial USDOL Handling of Research Misconduct Matters

(1) Officials should normally report allegations of research misconduct on the part of USDOL employees while in the performance of official duties to the immediate supervisor of the employee(s) against which the misconduct is alleged. These allegations should be handled under existing laws, rules, regulations and USDOL policy relating to misconduct of employees of USDOL. In applying these laws, DOL officials should consider utilizing the definitions of research misconduct adopted by the Federal Policy and should consider approaches to the application of existing laws that maximize consistency with the Federal Policy.

(2) Individuals or groups of individuals who wish to report allegations of research misconduct involving research supported by or contracted for a USDOL agency should report the allegation in writing either to the Awardee Institution involved or to the Agency Head of the Appropriate USDOL Agency.

(3) The Agency Head should forward reports of research misconduct promptly to the OIG.

(4) After forwarding a report of alleged research misconduct to the OIG, it would contribute to an orderly handling of these matters if the Agency Head would:

(a) Defer further action until informed by the OIG that the OIG will be conducting an investigation of the allegation or until a reasonable time period passes without such a notification (The reasonableness of the time period will depend on the particular circumstances, but agency heads may wish to consider the appropriateness of a 30–90 day period);

(b) If informed that an OIG investigation of the allegation will be conducted, the agency head may wish to defer to the OIG investigation of the allegation by taking no further investigatory action at that time;

(5) If the Agency Head is informed by the OIG that there will be no OIG investigation of the allegation or if a reasonable time period passes since the Agency Head has referred the allegation of research misconduct to the OIG, the Agency Head should consider the following actions:

(a) If the alleged misconduct is with activities under research support to or contract with an institution or enterprise, inform the awardee institution or enterprise of the alleged research misconduct, decide if the institution or enterprise has the capacity to undertake an inquiry and investigation, and if in the judgment of the Agency Head that capacity exists, request in writing that the institution or enterprise undertake an inquiry and, if warranted, an investigation; should the institution fail to notify the Agency Head within a reasonable time after receiving the written request that it will be undertaking an inquiry, the Agency Head may wish to proceed with its own inquiry and, if warranted, its own investigation. Agency heads may wish to consider a brief waiting period to hear from the institution, for example 30 days. They should attempt to conclude their own inquiries promptly. It will often be possible to conclude an inquiry within 90 days after its initiation and any investigation within 180 days after its initiation. The Agency Head should call upon all necessary assistance and expertise that can be provided by the Office of the Solicitor of the USDOL.

(b) If the alleged misconduct is with activities under research support to an individual or group of individuals, the Agency Head should consider proceeding with its own inquiry and, if warranted, its own investigation after informing each of the individuals of the alleged research misconduct. It may often be possible to complete any inquiry within 90 days after its initiation and any investigation within 180 days after its initiation. The Agency Head should call upon all necessary assistance and expertise that can be provided by the Office of the Solicitor of the USDOL.

Roles of Awardee Institutions

USDOL supports research activities in various ways, including the award of grants, contracts, purchase orders, or other agreements to provide support. Grants that include support for research activities are made to institutions, usually to universities and research institutes, and not directly to individuals. Similarly, most contracts for research services and products, including purchase orders, are entered into with institutions, including universities, research institutes, and business enterprises, rather than directly with individuals. In some cases, the USDOL will enter into a contract with or will provide support for research directly to an individual or to a group of individuals.

When the grant or contract or support of research is awarded directly to an individual or group of individuals rather than to an institution or enterprise there will be no role for such an institution or enterprise.

When the grant or contract or support of research is awarded to an institution or business enterprise.

(1) The awardee institution or enterprise may often be willing to bear primary responsibility for prevention and detection of research misconduct and for the inquiry, investigation, and adjudication of alleged research misconduct. If in the judgment of the Appropriate USDOL Agency, the awardee institution or enterprise has the capacity to conduct an inquiry, investigation, and adjudication, the appropriate USDOL Agency may want to rely on the awardee institution or enterprise to promptly:

(a) Initiate an inquiry into any suspected or alleged research misconduct;

(b) Conduct a subsequent investigation, if warranted;

(c) Take action necessary to ensure the integrity of research, the rights and interests of research subjects and the public, and the observance of legal requirements or responsibilities; and

(d) Provide appropriate safeguards for subjects of allegations as well as informants.

(2) If an institution or enterprise wishes the Appropriate USDOL Agency

to defer independent inquiry or investigation, it may eliminate the need for such inquiry or investigation by:

(a) Completing any inquiry and deciding whether an investigation is warranted promptly, so that the USDOL Agency can be satisfied that the public interest will be served. Completion within 90 days would be preferable. If completion of an inquiry is delayed, but the institution wishes USDOL deferral to continue, the Appropriate USDOL Agency may want to ask the institution to provide periodic status reports.

(b) Informing the Appropriate USDOL Agency if an initial inquiry supports a formal investigation.

(c) Keeping the Appropriate USDOL Agency informed during such an investigation.

(d) Completing any investigation and reaching a disposition within a reasonable time, preferably within 180 days of the initiation of the investigation. If completion of an investigation is delayed, but the institution wishes USDOL deferral to continue, the Appropriate USDOL Agency may ask the institution to submit periodic status reports.

(e) Providing the appropriate USDOL Agency with the final report from any investigation.

(3) USDOL believes it is in the public interest that if during an investigation into research misconduct, any individuals or groups of individuals become aware of any of the following they should follow the guidelines in the Federal Policy:

(a) Public health or safety is at risk;

(b) USDOL's resources, reputation, or other interests need protecting;

(c) There is reasonable indication of possible violations of civil or criminal law;

(d) Research activities should be suspended;

(e) Federal action may be needed to protect the interests of a subject of the investigation or of others potentially affected; or

(f) The scientific community or the public should be informed.

(4) To facilitate awareness of the USDOL Policy among contract and grant research recipients, Agency Heads should consider working with their contract and grant officers to insert language into contract and grant documents that makes Awardee institutions aware of the USDOL Policy and of the Federal Policy. For example, the language could include informational references to the Federal Policy as stated in the **Federal Register** Vol. 65. No. 235, December 6, 2000 and to the Department of Labor Manual Series (DLMS) Chapter 800.

Investigations

(1) When an awardee institution or the OIG or a Federal agency other than the Appropriate USDOL Agency, has promptly initiated its own inquiry and investigation, the Appropriate USDOL Agency may wish to defer its own inquiry or investigation until it receives the results of that external inquiry and investigation. If the Appropriate USDOL Agency does not receive the results of the external inquiry within what it believes to be a reasonable time, the Appropriate USDOL Agency should proceed with its own inquiry and, if warranted, its own investigation. It will often be appropriate for the Agency to proceed with its own inquiry if it does not receive the results of the external inquiry within 90 days and to proceed with its own investigation if it does not receive the results of an external investigation within 180 days.

(2) If the Appropriate USDOL Agency decides to initiate an investigation, it should be conducted with fairness. Among the fair procedures that agencies should consider are giving prompt written notice to the individual or institutions to be investigated where such notice would not prejudice the investigation or relate to a criminal investigation that is underway or under active consideration. Where notice is delayed, agencies should consider the need to give the notice as soon as it will no longer prejudice the investigation or contravene requirements of law or Federal law-enforcement policies.

(3) If a criminal investigation by the Department of Justice, the Federal Bureau of Investigation, or another Federal agency is underway or under active consideration by these agencies, the Appropriate USDOL Agency should decide what information, if any, may be disclosed to the subject of the investigation or to other USDOL employees.

(4) An investigation by the Appropriate USDOL Agency may include:

(a) Review of award files, reports, and other documents already readily available at USDOL or in the public domain;

(b) Review of procedures or methods and inspection of data, laboratory materials, and records at awardee institutions;

(c) Interviews with subjects or witnesses;

(d) Review of any documents or other evidence provided by or properly obtainable from parties, witnesses, or other sources;

(e) Cooperation with other Federal agencies; and

(f) Opportunity for the subject of the investigation to be heard.

(5) The Appropriate USDOL Agency may wish to contract with or invite outside consultants or experts to participate in a USDOL investigation.

(6) The Appropriate USDOL Agency should make every reasonable effort to complete a USDOL investigation and to report its recommendations, if any, to the Assistant Secretary of Labor for Administration and Management promptly. It will often be possible to complete such investigation within 180 days after initiating it, and, within 60 days after completing the investigation, to submit the investigative report along with a recommended disposition to the Assistant Secretary for Administration and Management.

(7) The subject of the investigation may wish to hire legal representation to assist in responding to allegations.

(8) In many cases, Agency Heads will be relying on outside inquiries and investigations, e.g., those being conducted by awardee institutions or by the OIG, or by another federal agency. However, there may be cases when Agency Heads have no alternative but to conduct their own inquiry and, if necessary, their own investigation. One possible way to proceed is to contract out the inquiry and/or investigation to an institution with expertise in research misconduct issues, for example, a large research university or professional organization. Another way would be to proceed with the inquiry and/or investigation using a panel of experts, both internal and external to USDOL to review all documents and interview all participants to the dispute and the allegation and to produce a report. The agency head should call upon whatever assistance can be provided by USDOL contract and grant officers and by the USDOL Office of the Solicitor as it proceeds.

Interim Administrative Actions

(1) After an inquiry or during an external investigation or an investigation by the Appropriate USDOL Agency, the Assistant Secretary of Labor for Administration and Management or other appropriate USDOL official may recommend that interim actions be taken to protect Federal resources or to guard against continuation of any suspected or alleged research misconduct. The Assistant Secretary or other appropriate USDOL official should consider making such recommendation when requested by the Agency Head of the Appropriate USDOL Agency, and should consult with the appropriate USDOL Grant or Contract

Officer and the Office of the Solicitor of the USDOL.

(2) When suspension of a grant or contract or other award is believed to be appropriate, the official responsible for making decisions should be legally authorized to take such actions and should ordinarily be the appropriate USDOL Grant or Contract Officer.

(3) Officials should consider taking such interim actions whenever information developed during an investigation indicates a need to do so. The appropriate Grant or Contract Officer should periodically review such interim actions during an investigation and modify them as warranted. An interested party may wish to request a review or modification by the immediate supervisor of the suspending official.

(4) The suspending official should make, and the Appropriate USDOL Agency should retain, a record of interim actions taken and the reasons for taking them.

Dispositions

(1) Agency heads should carefully consider any report they may receive from (a) an external investigation by an awardee institution or (b) a report from an OIG investigation, or (c) a report from an investigation by another Federal agency, or (d) a report from an investigation conducted by the Appropriate USDOL Agency. It would be appropriate for the Agency Head of the Appropriate USDOL Agency to assess not only the accuracy and completeness of the report, but also whether the investigating entity followed reasonable procedures. The Agency head will ordinarily be able, within 30 days, either to recommend adoption of the findings in whole or in part or to initiate a new investigation. If a new investigation is initiated, it can normally be completed within 90 days of its initiation.

(2) When any satisfactory external investigation or an investigation by the Appropriate USDOL Agency fails to confirm alleged misconduct,

(a) The Appropriate USDOL Agency should notify the subject of the investigation and, if appropriate, those who reported the suspected or alleged misconduct. This notification may include the investigation report.

(b) Any interim administrative restrictions that were imposed should ordinarily be lifted.

(3) When a satisfactory external investigation or an investigation by the Appropriate USDOL Agency confirms misconduct, the agency head, in consultation with the Office of the Solicitor of USDOL, should recommend to the Assistant Secretary for Administration and Management an appropriate disposition and any final actions to be taken by USDOL.

(a) In cases in which debarment from further contracts or grants is considered by the Appropriate USDOL Agency to be the preferred disposition, the case should be referred to the relevant office of contracts and grants management within the USDOL but:

(i) The debarring official should normally be either the Assistant Secretary of Labor for Administration and Management, or an official designated by the Assistant Secretary.

(ii) Except in unusual circumstances, the investigation report and recommended disposition should be included among the materials that appropriate officials provided to the subject of the investigation as part of the notice of proposed debarment.

(iii) It would be helpful to the subject if the notice of a debarring official's decision would include instructions on how to pursue any appeal.

(b) In other cases,

(i) Except in unusual circumstances, the investigation report should be provided by the Appropriate USDOL Agency to the subject of the investigation, who should be invited to submit comments or rebuttal within a reasonable time period. Thirty days will ordinarily be a sufficient time period for subjects to submit these comments or rebuttals. Any response should receive full consideration and may lead to revision of the report or of a recommended disposition.

(ii) Normally within 60 days after completion of an investigation by the Appropriate USDOL Agency or the receipt of a report from a satisfactory external investigation, it will be practicable for the Agency Head of the Appropriate USDOL Agency to submit to the Assistant Secretary of Labor for Administration and Management the investigation report, any comments or rebuttal from the subject of the investigation, and a recommended disposition. The recommended disposition may include proposals for any final actions to be taken by USDOL.

(iii) The Assistant Secretary of Labor for Administration and Management should review the investigation report and the recommended disposition. The Assistant Secretary may initiate further hearings or investigation.

Final Actions

(1) In the case of findings of research misconduct involving research supported by the USDOL or one of its agencies, possible final actions to be considered are listed below for guidance purposes and range from minimal restrictions (Group I) to the most severe and restrictive (Group III). They are not mandated, nor exhaustive and do not include possible criminal sanctions.

(a) Group I Actions:

(i) Send a letter of reprimand to the individual or institution.

(ii) Require, as a condition of any future award of a grant or contract or purchase order or other support for research, that for a specified period an individual or institution obtain special prior approval of particular activities from the Assistant Secretary for Administration and Management or the designee of the Assistant Secretary.

(iii) Require, for a specified period, that an institutional official other than those guilty of misconduct certify the accuracy of reports generated under an award or provide assurance of compliance with particular policies, regulations, guidelines, or special terms and conditions.

(b) Group II Actions:

(i) Totally or partially suspend an active award, or restrict for some specified period designated, activities or expenditures under an active award.

(ii) Require special reviews of all requests for funding or support of research from an affected individual or institution, for a specified period, to ensure that steps have been taken to prevent repetition of the misconduct.

(iii) Require a correction to the research record.

(c) Group III Actions:

(i) Terminate an active award or other agreement of support for research.

(ii) Require the return to USDOL of any funds that have been disbursed to the grantee or contractor.

(iii) Prohibit participation of an individual as a USDOL reviewer, advisor, or consultant for a specified period.

(iv) Using prescribed procedures and through the authorized USDOL official, debar or suspend an individual or institution from participation in USDOL contracts or grants or purchase orders or research support for a specified period.

(v) In the event of such debarment or suspension, provide appropriate documentation to the authorized USDOL official setting forth the basis for recommending suspension and/or debarment from government wide federal contracting and/or grant opportunities for a specified period, including placement on the ''Excluded Parties Listing Services'' maintained by the General Services Administration (GSA) at *http://www.epls.gov.*

(2) In deciding what final actions are appropriate when misconduct is found, USDOL officials should consider:

(a) How serious the misconduct was;

(b) The degree to which the misconduct was knowing, intentional, or reckless;

(c) Whether it was an isolated event or part of a pattern;

(d) Whether it had a significant impact on the research record, research subjects, other researchers, institutions or the public welfare; and

(e) Other relevant circumstances.

Appeals

(1) Any adverse action against a grantee or contractor arising from research misconduct or otherwise is subject to applicable DOL procedures, including any appeal/disputes procedures.

(2) The Secretary of Labor may wish to appoint an uninvolved USDOL officer or employee to review an appeal and make recommendations. The official deciding appeals should inform the appellant when a final decision has been reached. It will normally be practicable to make an appellate decision within 60 days after receiving the appeal.

Signed at Washington, DC this 9th day of December 2004.

Elaine L. Chao,

Secretary of Labor.

[FR Doc. 04–27421 Filed 12–14–04; 8:45 am]

BILLING CODE 4510–23–P

Reader Aids

Federal Register

Vol. 69, No. 240

Wednesday, December 15, 2004

CUSTOMER SERVICE AND INFORMATION

Federal Register/Code of Federal Regulations	
General Information, indexes and other finding aids	**202–741–6000**
Laws	**741–6000**
Presidential Documents	
Executive orders and proclamations	**741–6000**
The United States Government Manual	**741–6000**
Other Services	
Electronic and on-line services (voice)	**741–6020**
Privacy Act Compilation	**741–6064**
Public Laws Update Service (numbers, dates, etc.)	**741–6043**
TTY for the deaf-and-hard-of-hearing	**741–6086**

ELECTRONIC RESEARCH

World Wide Web

Full text of the daily Federal Register, CFR and other publications is located at: **http://www.gpoaccess.gov/nara/index.html**

Federal Register information and research tools, including Public Inspection List, indexes, and links to GPO Access are located at: **http://www.archives.gov/federal__register/**

E-mail

FEDREGTOC-L (Federal Register Table of Contents LISTSERV) is an open e-mail service that provides subscribers with a digital form of the Federal Register Table of Contents. The digital form of the Federal Register Table of Contents includes HTML and PDF links to the full text of each document.

To join or leave, go to **http://listserv.access.gpo.gov** and select *Online mailing list archives, FEDREGTOC-L, Join or leave the list (or change settings);* then follow the instructions.

PENS (Public Law Electronic Notification Service) is an e-mail service that notifies subscribers of recently enacted laws.

To subscribe, go to **http://listserv.gsa.gov/archives/publaws-l.html** and select *Join or leave the list (or change settings);* then follow the instructions.

FEDREGTOC-L and **PENS** are mailing lists only. We cannot respond to specific inquiries.

Reference questions. Send questions and comments about the Federal Register system to: **fedreg.info@nara.gov**

The Federal Register staff cannot interpret specific documents or regulations.

FEDERAL REGISTER PAGES AND DATE, DECEMBER

69805–70050 1
70051–70178 2
70179–70350 3
70351–70536 6
70537–70870 7
70871–71338 8
71339–71690 9
71691–72108 10
72109–74404 13
74405–74946 14
74947–75222 15

CFR PARTS AFFECTED DURING DECEMBER

At the end of each month, the Office of the Federal Register publishes separately a List of CFR Sections Affected (LSA), which lists parts and sections affected by documents published since the revision date of each title.

3 CFR

Proclamations:
7850 70351
7851 70353
7852 71689
7853 74945
7854 74947

Executive Orders:
12473 (Amended by EO 13365) 71333
13286 (See EO 13362) 70173
13289 (See EO 13363) 70175
13303 (Amended by EO 13364) 70177
13315 (See EO 13364) 70177
13350 (See EO 13364) 70177
13362 70173
13363 70175
13364 70177
13365 71333

Administrative Orders:
Memorandums:
Memorandum of October 21, 2004 70349
Memorandum of December 8, 2004 74935
Memorandum of December 8, 2004 74937
Memorandum of December 8, 2004 74939
Memorandum of December 8, 2004 74941
Presidential Determinations:
No. 2005–07 of November 29, 2004 72109
No. 2005–08 of November 29, 2004 74931
No. 2005–09 of December 6, 2004 74933

5 CFR

317 70355
352 70355
359 70355
451 70355
530 70355
531 70355
534 70355
575 70355
841 69805
842 69805
843 69805

6 CFR

Proposed Rules:
5 70402

7 CFR

210 .....70871, 70872
220 70872
319 71691
354 71660
457 74405
905 70874
1005 71697
1006 71697
1007 71697
1464 70367
1775 70877
1951 70883

Proposed Rules:
319 71736
929 69996
930 71744
983 71749
989 71753

9 CFR

166 70179
317 74405
381 74405
430 70051

10 CFR

25 74949
95 74949

Proposed Rules:
25 75007
95 75007

11 CFR

Proposed Rules:
300 71388

12 CFR

Proposed Rules:
226 70925

13 CFR

121 70180

Proposed Rules:
121 70197

14 CFR

23 .....70885, 74407
39 .....69807, 69810, 70368, 70537, 70539, 71339, 71340, 71342, 71344, 71347, 71349, 71351, 71353, 74411, 74412
71 .....70053, 70185, 70371, 70372, 70541, 70542, 71701, 71702, 72111, 72112, 74953, 74954, 74955
73 .....70887, 72113
91 74413
95 74413
97 74415

Proposed Rules:
39 .....69829, 69832, 69834, 69836, 69838, 69842, 69844,

70202, 70204, 70564, 70566, 70568, 70571, 70574, 70936, 70938, 72134, 72136, 74461, 74463, 74465
61 74898
63 74898
65 74898
67 74898
71 ....70208, 71756
91 74898
121 74898
135 74898

15 CFR

6 74416
732 71356
734 71356
740 71356
742 71356
744 71356
750 69814
772 71356
806 70543
Proposed Rules:
710 70754
711 70754
712 70754
713 70754
714 70754
715 70754
716 70754
717 70754
718 70754
719 70754
720 70754
721 70754
722 70754
723 70754
724 70754
725 70754
726 70754
727 70754
728 70754
729 70754

17 CFR

240 70852
248 71322
275 72054
279 72054
Proposed Rules:
240 ....71126, 71256
242 71126
249 71126

18 CFR

11 71364
Proposed Rules:
Ch. 1 70077

21 CFR

1 ....71562, 71655
10 74418
11 71562
510 70053
520 ....70053, 74418
522 ....70054, 70055
558 70056
880 70702
1310 74957
Proposed Rules:
165 70082
1301 70576

22 CFR

122 70888
129 70888

23 CFR

650 74419
655 69815

24 CFR

200 74894
206 75204
570 70864
Proposed Rules:
206 70244
970 75188
2004 70868
3280 70016

25 CFR

Proposed Rules:
542 69847

26 CFR

1 ....70547, 70550
25 70547
31 ....69819, 70547
53 70547
55 70547
156 70547
301 70547
602 ....70547, 70550
Proposed Rules:
1 ....70578, 71757
26 70404
301 71757

27 CFR

9 ....70889, 71372

28 CFR

16 72114

29 CFR

1926 70373
4011 69820
4022 ....69820, 74973
4044 ....69821, 74973

30 CFR

18 70752
938 ....71528, 71551

31 CFR

103 74439

33 CFR

100 ....70551, 70552
117 ....70057, 70059, 70373, 71704, 71706, 74441, 74975
165 ....70374, 71708, 71709, 74442
Proposed Rules:
100 70578
110 ....71758, 75009
117 ....70091, 70209, 72138, 75011, 75013
165 ....70211, 71758, 75009

35 CFR

Ch. I 71375

36 CFR

13 70061
242 70074
1228 74976
Proposed Rules:
242 70940

37 CFR

201 70377
253 69822

38 CFR

21 74977

40 CFR

9 70552
52 ....69823, 70893, 70895, 71375, 71712, 72115, 72118
63 74979
180 ....70897, 71714
271 ....70898, 74444
300 74448
712 70552
Proposed Rules:
52 ....69863, 70944, 70945, 71390, 71764
60 ....69864, 71472
63 ....69864, 75015
93 72140
271 ....70946, 74467
272 71391
300 74467
721 70404

41 CFR

Proposed Rules:
51-2 70214
51-3 70214
51-4 70214

42 CFR

1003 74451
Proposed Rules:
1001 71766

43 CFR

44 70557
1880 70557

44 CFR

64 70377
65 ....70185, 71718, 72128
67 ....70191, 70192, 71721, 72131
Proposed Rules:
67 ....72156, 72158

45 CFR

Proposed Rules:
650 71395

46 CFR

310 74454

47 CFR

0 70316
1 ....70378, 72020, 75144
2 ....71380, 72020
4 70316
11 72020
15 ....71380, 72020
18 70562
21 72020
22 75144
24 75144
27 ....70378, 72020, 75144
54 74985
63 70316
64 71383
73 ....71384, 71385, 71386, 71387, 72020, 74988
74 ....70378, 72020
76 72020
78 72020
79 72020
90 ....70378, 75144
101 ....70378, 72020
Proposed Rules:
1 ....72046, 75174
22 75174
24 75174
27 ....72046, 75174
73 ....71396, 75016, 75017
90 74174

48 CFR

203 74989
206 74990
209 74989
212 74991
213 74991
217 74992
219 74995
App. I 74995
225 74991
236 75000
237 75000
252 ....74989, 74991
909 75001
970 75001
Proposed Rules:
901 75017
970 75017

49 CFR

171 ....70902, 75208
172 75208
173 ....70902, 75208
174 70902
175 ....70902, 75208
176 70902
177 70902
178 70902
219 72133
571 ....70904, 74848
585 70904
586 70904
589 70904
590 70904
596 70904
597 70904
Proposed Rules:
571 75020
572 70947
1507 71767

50 CFR

14 70379
17 ....70382, 71723
100 70074
222 69826
223 69826
300 71731
622 70196
635 ....70396, 71732, 71735
648 ....70919, 70923
679 ....69828, 70924, 74455, 75004, 75005
Proposed Rules:
17 ....69878, 70412, 70580, 70971, 71284, 72161, 74468
20 71770
100 70940
226 ....71880, 74572
229 70094
635 71771
648 70414
660 70973
679 ....70589, 70605, 70974

REMINDERS

The items in this list were editorially compiled as an aid to Federal Register users. Inclusion or exclusion from this list has no legal significance.

RULES GOING INTO EFFECT DECEMBER 15, 2004

COMMERCE DEPARTMENT

National Oceanic and Atmospheric Administration

Fishery conservation and management:
- Alaska; fisheries of Exclusive Economic Zone—
  - Bering Sea and Aleutian Islands groundfish; published 12-15-04
- Caribbean, Gulf, and South Atlantic fisheries—
  - Gulf of Mexico red snapper; published 12-3-04

DEFENSE DEPARTMENT

Acquisition regulations:
- Competition requirements; published 12-15-04
- Construction and architect-engineer services; published 12-15-04
- Debarment, suspension, and business ethics; improper business practices and contractor qualifications; published 12-15-04
- Firefighting services contracts; published 12-15-04
- Pilot Mentor-Protege Program; published 12-15-04
- Task and delivery order contracts; contract period; published 12-15-04
- U.S.-Chile and U.S.-Singapore Free Trade Agreements; implementation; published 12-15-04

HOMELAND SECURITY DEPARTMENT

Coast Guard

Drawbridge operations:
- Iowa and Illinois; published 12-15-04

SOCIAL SECURITY ADMINISTRATION

Social security benefits:
- Federal old age, survivors, and disability insurance—
  - Malignant neoplastic diseases; medical criteria evaluation; published 11-15-04

VETERANS AFFAIRS DEPARTMENT

Vocational rehabilitation and education:
- Veterans education—
  - Montgomery GI Bill-Active Duty Program; rates payable increase; published 12-15-04

COMMENTS DUE NEXT WEEK

AGRICULTURE DEPARTMENT

Agricultural Marketing Service

Cotton classing, testing and standards:
- Classification services to growers; 2004 user fees; Open for comments until further notice; published 5-28-04 [FR 04-12138]

Raisins produced from grapes grown in—
- California; comments due by 12-20-04; published 12-10-04 [FR 04-27162]

Spearmint oil produced in—
- Far West; comments due by 12-20-04; published 10-21-04 [FR 04-23628]

AGRICULTURE DEPARTMENT

Animal and Plant Health Inspection Service

Plant-related quarantine, foreign:
- Pine shoot beetle; comments due by 12-20-04; published 10-20-04 [FR 04-22220]

AGRICULTURE DEPARTMENT

Rural Utilities Service

Telecommunications specifications and standards:
- Materials, equipment and construction—
  - Cable splicing connectors; comments due by 12-20-04; published 10-20-04 [FR 04-23477]

COMMERCE DEPARTMENT

Industry and Security Bureau

National security industrial base regulations:
- Defense priorities and allocations system; rated orders rejection; electronic transmission of reasons; comments due by 12-22-04; published 11-22-04 [FR 04-25718]

COMMERCE DEPARTMENT

National Oceanic and Atmospheric Administration

Fishery conservation and management:
- Northeastern United States fisheries—
  - Atlantic surfclams, ocean quahogs, and Maine mahogany ocean quahogs; comments due by 12-20-04; published 11-18-04 [FR 04-25640]
  - Northeast multispecies; comments due by 12-20-04; published 11-19-04 [FR 04-25722]
  - Summer flounder, scup and black sea bass; comments due by 12-21-04; published 12-6-04 [FR 04-26724]
- West Coast States and Western Pacific fisheries—
  - Pacific sardine; comments due by 12-23-04; published 12-8-04 [FR 04-26953]

COURT SERVICES AND OFFENDER SUPERVISION AGENCY FOR THE DISTRICT OF COLUMBIA

Semi-annual agenda; Open for comments until further notice; published 12-22-03 [FR 03-25121]

DEFENSE DEPARTMENT

Acquisition regulations:
- Pilot Mentor-Protege Program; Open for comments until further notice; published 12-15-04 [FR 04-27351]

ENERGY DEPARTMENT

Meetings:
- Environmental Management Site-Specific Advisory Board—
  - Oak Ridge Reservation, TN; Open for comments until further notice; published 11-19-04 [FR 04-25693]

ENERGY DEPARTMENT

Energy Efficiency and Renewable Energy Office

Commercial and industrial equipment; energy efficiency program:
- Test procedures and efficiency standards—
  - Commercial packaged boilers; Open for comments until further notice; published 10-21-04 [FR 04-17730]

ENERGY DEPARTMENT

Federal Energy Regulatory Commission

Electric rate and corporate regulation filings:
- Virginia Electric & Power Co. et al.; Open for comments until further notice; published 10-1-03 [FR 03-24818]

ENVIRONMENTAL PROTECTION AGENCY

Air quality implementation plans; approval and promulgation; various States:
- California; comments due by 12-20-04; published 11-19-04 [FR 04-25625]
- Oregon; comments due by 12-22-04; published 11-22-04 [FR 04-25628]

Environmental statements; availability, etc.:
- Coastal nonpoint pollution control program—
  - Minnesota and Texas; Open for comments until further notice; published 10-16-03 [FR 03-26087]

Solid waste:
- Land disposal restrictions—
  - Chemical Waste Management, Chemical Services, LLC; site-specific treatment standard variance for selenium waste; comments due by 12-20-04; published 11-19-04 [FR 04-25716]
  - Chemical Waste Management, Chemical Services, LLC; site-specific treatment standard variance for selenium waste; comments due by 12-20-04; published 11-19-04 [FR 04-25717]

Toxic substances:
- Preliminary assessment information reporting; addition of chemicals; comments due by 12-21-04; published 12-7-04 [FR 04-26821]

Water pollution control:
- National Pollutant Discharge Elimination System—
  - Concentrated animal feeding operations in New Mexico and Oklahoma; general permit for discharges; Open for comments until further notice; published 12-7-04 [FR 04-26817]

Water pollution; effluent guidelines for point source categories:
- Meat and poultry products processing facilities; Open for comments until further notice; published 9-8-04 [FR 04-12017]

HEALTH AND HUMAN SERVICES DEPARTMENT

Food and Drug Administration

Food for human consumption:

Salmonella; shell egg producers to implement prevention measures; comments due by 12-21-04; published 9-22-04 [FR 04-21219]
Meetings; comments due by 12-21-04; published 10-7-04 [FR 04-22476]
Reports and guidance documents; availability, etc.:
Evaluating safety of antimicrobial new animal drugs with regard to their microbiological effects on bacteria of human health concern; Open for comments until further notice; published 10-27-03 [FR 03-27113]
Medical devices—
Dental noble metal alloys and base metal alloys; Class II special controls; Open for comments until further notice; published 8-23-04 [FR 04-19179]

HOMELAND SECURITY DEPARTMENT

Coast Guard

Anchorage regulations:
Maryland; Open for comments until further notice; published 1-14-04 [FR 04-00749]

HOUSING AND URBAN DEVELOPMENT DEPARTMENT

Practice and procedure:
Applications for grants and other financial assistance; electronic submission; comments due by 12-23-04; published 11-23-04 [FR 04-25893]

INTERIOR DEPARTMENT

Fish and Wildlife Service

Endangered and threatened species permit applications
Recovery plans—
Paiute cutthroat trout; Open for comments until further notice; published 9-10-04 [FR 04-20517]
Endangered and threatened species:
Boulder darter and spotfin chub; reintroduction to Shoal Creek, AL and TN; comments due by 12-20-04; published 10-21-04 [FR 04-23587]

NUCLEAR REGULATORY COMMISSION

Environmental statements; availability, etc.:
Fort Wayne State Developmental Center; Open for comments until further notice; published 5-10-04 [FR 04-10516]

SMALL BUSINESS ADMINISTRATION

Disaster loan areas:
Maine; Open for comments until further notice; published 2-17-04 [FR 04-03374]

SOCIAL SECURITY ADMINISTRATION

Social Security benefits:
Federal old age, survivors, and disability insurance—
Administrative review process; incorporation by reference of oral findings of fact and rationale in wholly favorable written decisions; comments due by 12-20-04; published 10-20-04 [FR 04-23357]

OFFICE OF UNITED STATES TRADE REPRESENTATIVE

Trade Representative, Office of United States

Generalized System of Preferences:
2003 Annual Product Review, 2002 Annual Country Practices Review, and previously deferred product decisions; petitions disposition; Open for comments until further notice; published 7-6-04 [FR 04-15361]

TRANSPORTATION DEPARTMENT

Federal Aviation Administration

Airworthiness directives:
B-series combustion heaters, models B1500, B2030, B3040, B3500, B4050, and B4500; comments due by 12-20-04; published 10-22-04 [FR 04-23620]
Boeing; comments due by 12-20-04; published 11-3-04 [FR 04-24540]
Hartzell Propeller Inc.; comments due by 12-20-04; published 10-20-04 [FR 04-23366]
McDonnell Douglas; comments due by 12-20-04; published 11-5-04 [FR 04-24729]
Airworthiness standards:
Special conditions—
Cessna Model 172 series airplanes; comments due by 12-22-04; published 11-22-04 [FR 04-25697]
Thielert Aircraft Engines modified Cessna Model 172 series airplanes; comments due by 12-20-04; published 11-19-04 [FR 04-25698]
Class E airspace; comments due by 12-20-04; published 11-3-04 [FR 04-24461]

TRANSPORTATION DEPARTMENT

National Highway Traffic Safety Administration

Motor vehicle safety standards:
Rear impact guards; comments due by 12-20-04; published 11-5-04 [FR 04-24737]

TREASURY DEPARTMENT

Internal Revenue Service

Procedure and administration:
Timely mailing of documents and payments treated as timely filing and paying; comments due by 12-20-04; published 9-21-04 [FR 04-21218]

LIST OF PUBLIC LAWS

This is a continuing list of public bills from the current session of Congress which have become Federal laws. It may be used in conjunction with "PLUS" (Public Laws Update Service) on 202–741–6043. This list is also available online at *http://www.archives.gov/federal_register/public_laws/public_laws.html*.

The text of laws is not published in the **Federal Register** but may be ordered in "slip law" (individual pamphlet) form from the Superintendent of Documents, U.S. Government Printing Office, Washington, DC 20402 (phone, 202–512–1808). The text will also be made available on the Internet from GPO Access at *http://www.gpoaccess.gov/plaws/index.html*. Some laws may not yet be available.

H.R. 2655/P.L. 108–449

To amend and extend the Irish Peace Process Cultural and Training Program Act of 1998. (Dec. 10, 2004; 118 Stat. 3469)

H.R. 4302/P.L. 108–450

District of Columbia Mental Health Civil Commitment Modernization Act of 2004 (Dec. 10, 2004; 118 Stat. 3472)

S. 437/P.L. 108–451

Arizona Water Settlements Act (Dec. 10, 2004; 118 Stat. 3478)

S. 1466/P.L. 108–452

Alaska Land Transfer Acceleration Act (Dec. 10, 2004; 118 Stat. 3575)

S. 2192/P.L. 108–453

Cooperative Research and Technology Enhancement (CREATE) Act of 2004 (Dec. 10, 2004; 118 Stat. 3596)

S. 2486/P.L. 108–454

Veterans Benefits Improvement Act of 2004 (Dec. 10, 2004; 118 Stat. 3598)

S. 2873/P.L. 108–455

To extend the authority of the United States District Court for the Southern District of Iowa to hold court in Rock Island, Illinois. (Dec. 10, 2004; 118 Stat. 3628)

S. 3014/P.L. 108–456

To reauthorize the Harmful Algal Bloom and Hypoxia Research and Control Act of 1998, and for other purposes. (Dec. 10, 2004; 118 Stat. 3630)

Last List December 13, 2004

Public Laws Electronic Notification Service (PENS)

PENS is a free electronic mail notification service of newly enacted public laws. To subscribe, go to *http://listserv.gsa.gov/archives/publaws-l.html*

Note: This service is strictly for E-mail notification of new laws. The text of laws is not available through this service. **PENS** cannot respond to specific inquiries sent to this address.