G. Review Under the Unfunded Mandates Reform Act of 1995

The Unfunded Mandates Reform Act of 1995 (Pub. L. 104–4) requires a Federal agency to perform a detailed assessment of costs and benefits of any rule imposing a Federal Mandate with costs to State, local or tribal governments, or to the private sector, of $100 million or more in any single year. This rulemaking does not impose a Federal mandate on State, local or tribal governments or on the private sector.

H. Review Under the Treasury and General Government Appropriations Act, 1999

Section 654 of the Treasury and General Government Appropriations Act, 1999 (Pub. L. 105–277), requires Federal agencies to issue a Family Policymaking Assessment for any rule or policy that may affect family well-being. This rule will have no impact on family well being.

I. Review Under Executive Order 13211

Executive Order 13211, Actions Concerning Regulations That Significantly Affect Energy Supply, Distribution, or Use, (66 FR 28355, May 22, 2001) requires Federal agencies to prepare and submit to the OIRA, Office of Management and Budget, a Statement of Energy Effects for any significant energy action. A ''significant energy action'' is defined as any action by an agency that promulgates or is expected to lead to promulgation of a final rule, and that: (1) Is a significant regulatory action under Executive Order 12866, or any successor order; and (2) is likely to have a significant adverse effect on the supply, distribution, or use of energy, or (3) is designated by the Administrator of OIRA as a significant energy action. For any significant energy action, the agency must give a detailed statement of any adverse effects on energy supply, distribution, or use should the proposal be implemented, and of reasonable alternatives to the action and their expected benefits on energy supply, distribution, and use.

Today's rule is not a significant energy action. Accordingly, DOE has not prepared a Statement of Energy Effects.

J. Review Under the Treasury and General Government Appropriations Act, 2001

The Treasury and General Government Appropriations Act, 2001, 44 U.S.C. 3516, note, provides for agencies to review most disseminations of information to the public under implementing guidelines established by each agency pursuant to general guidelines issued by OMB. OMB's guidelines were published at 67 FR 8452 (February 22, 2002), and DOE's guidelines were published at 67 FR 62446 (October 7, 2002). DOE has reviewed today's notice under the OMB and DOE guidelines and has concluded that it is consistent with applicable policies in those guidelines.

K. Approval by the Office of the Secretary of Energy

The Office of the Secretary of Energy has approved issuance of this proposed rule.

List of Subjects in 48 CFR Parts 901 and 970

Government procurement.

Issued in Washington, DC, on December 8, 2004.

Richard H. Hopf,

Director, Office of Procurement and Assistance Management, Office of Management, Budget and Evaluation, Department of Energy.

Robert C. Braden, Jr.,

Director, Office of Acquisition and Supply Management, National Nuclear Security Administration.

For the reasons set out in the preamble, DOE proposes to amend Chapter 9 of Title 48 of the Code of Federal Regulations as set forth below:

1. The authority citation for part 901 is revised to read as follows:

Authority: 42 U.S.C. 2201; 2282a; 2282b; 2282c; 42 U.S.C. 7101, et. seq.; 41 U.S.C. 418b; 50 U.S.C. 2401, et seq.

PART 901—FEDERAL ACQUISITION REGULATIONS SYSTEM

2. Section 901.105 is amended by revising the second sentence to read as follows:

901.105 OMB control numbers.

* * * The OMB control number for the collection of information under 48 CFR chapter 9 is 1910–4100 except for Reporting and Recordkeeping Requirements for Safety Management (see 48 CFR 970.5223–1) which is 1910–5103.

3. The authority citation for part 970 continues to read as follows:

Authority: 42 U.S.C. 2201; 2282a; 2282b; 2282c; 42 U.S.C. 7101, et. seq.; 41 U.S.C. 418b; 50 U.S.C. 2401, et seq.

PART 970—DOE MANAGEMENT AND OPERATING CONTRACTS

970.1504–4–1–970.1504–4–3 [Removed and Reserved]

4. Sections 970.1504–4–1 through 970.1504–4–3 are removed and reserved.

970.1504–5 [Amended]

5. Section 970.1504–5 is amended by removing paragraph (b), and redesignating paragraphs (c), (d) and (e) as paragraphs (b), (c) and (d) respectively.

970.5203–1 [Amended]

6. Section 970.5203–1 is amended by revising the clause date to read [Date (Month and Year) 30 days following the date of publication of the final rule in the **Federal Register**] and by adding in paragraph (a)(1), second sentence, the words ''including consideration of outsourcing of functions'' after the word ''promoted''.

970.5203–2 [Amended]

7. Section 970.5203–2, is amended by revising the clause date to read [Date (Month and Year) 30 days following the date of publication of the final rule in the **Federal Register**] and by adding in paragraph (a), last sentence, the words ''outsourcing decisions,'' after the words ''changes in organization.''

970.5215–2 [Removed and Reserved]

8. Section 970.5215–2, Make-or-Buy plan, is removed and reserved.

9. Section 970.5244–1 is amended by revising the clause date and by removing and reserving paragraph (n) to read as follows:

970.5244–1 Contractor purchasing system.

* * *

Contractor Purchasing System

[Date (Month and Year) 30 days following date of publication of the final rule in the **Federal Register**]

* * * * *

(n) [Removed and Reserved].

* * * * *

[FR Doc. 04–27417 Filed 12–14–04; 8:45 am]

BILLING CODE 6450–01–P

DEPARTMENT OF TRANSPORTATION

National Highway Traffic Safety Administration

49 CFR Part 571

[Docket No. NHTSA–2004–19840]

RIN 2127–AH34

Federal Motor Vehicle Safety Standards; Door Locks and Door Retention Components and Side Impact Protection

AGENCY: National Highway Traffic Safety Administration, Department of Transportation.

ACTION: Notice of proposed rulemaking (NPRM).

SUMMARY: We are proposing to amend Federal Motor Vehicle Safety Standard (FMVSS) No. 206, *Door locks and door retention components*, in order to add and update requirements and test procedures and to harmonize with the world's first global technical regulation for motor vehicles. If adopted, today's proposal would add test requirements and test procedures for sliding doors, add secondary latched position requirements for doors other than hinged side doors and back doors, provide a new test procedure for assessing inertial forces, and extend the application of FMVSS No. 206 to buses with a Gross Vehicle Weight Rating (GVWR) of less than 10,000 pounds, including 12–15 passenger vans.

DATES: *Comment closing date:* You should submit your comments early enough to ensure that Document Management receives them not later than February 14, 2005. *See* **SUPPLEMENTARY INFORMATION** section for proposed effective date.

ADDRESSES: For purposes of identification, please mention the docket number of this document in your comments. You may submit those comments by any of the following methods:

- Web Site: *http://dms.dot.gov.* Follow the instructions for submitting comments on the DOT electronic docket site.
- Fax: 1–202–493–2251.
- Mail: Docket Management Facility; U.S. Department of Transportation, 400 Seventh Street, SW., Nassif Building, Room PL–401, Washington, DC 20590–001.
- Hand Delivery: Room PL–401 on the plaza level of the Nassif Building, 400 Seventh Street, SW., Washington, DC, between 9 a.m. and 5 p.m., Monday through Friday, except Federal Holidays.
- Federal eRulemaking Portal: Go to *http://www.regulations.gov.* Follow the online instructions for submitting comments.

Instructions: All submissions must include the agency name and docket number or Regulatory Identification Number (RIN) for this rulemaking. For detailed instructions on submitting comments and additional information on the rulemaking process, see the Public Comments heading of the **SUPPLEMENTARY INFORMATION** section of this document. Note that all comments received will be posted without change to *http://dms.dot.gov*, including any personal information provided. Please see the discussion of the Privacy Act under the Public Comments section.

Docket: For access to the docket to read background documents or comments received, go to *http://dms.dot.gov* at any time or to Room PL–401 on the plaza level of the Nassif Building, 400 Seventh Street, SW., Washington, DC, between 9 a.m. and 5 p.m., Monday through Friday, except Federal Holidays.

FOR FURTHER INFORMATION CONTACT: *For technical issues:* Dr. George Mouchahoir, Chief Structures and Special Systems Division, Office of Crashworthiness Standards, National Highway Traffic Safety Administration, 400 Seventh Street, SW., Washington, DC 20590; telephone (202) 366–4919; telefax (202) 493–2739; *gmouchahoir@nhtsa.dot.gov.*

For legal issues: Mr. Christopher Calamita, Office of the Chief Counsel, National Highway Traffic Safety Administration, 400 Seventh Street, SW., Washington, DC 20590; telephone (202) 366–2992; telefax (202) 366–3820.

SUPPLEMENTARY INFORMATION: *Proposed effective date:* If adopted, the amendments proposed in this rulemaking action would become effective September 1, two years following the next model year after the date of publication of a final rule in the **Federal Register**. For example, if a final rule were adopted on December 1, 2005, the rule would be effective beginning September 1, 2008. Optional early compliance would be permitted on and after the date of publication of the final rule in the **Federal Register**.

Table of Contents

I. Executive Summary
II. Background
III. Current Requirements of FMVSS No. 206
IV. Scope of the Safety Problem
V. Harmonization Efforts
VI. Proposed Improvements to FMVSS No. 206
A. Hinged Door Issues
1. Load Tests
2. Inertial Test
3. Door Hinges
B. Side Sliding Door Issues
C. Door Locks
D. Applicability to Buses
E. Summary of Improvements
VII. Alternative Approaches to Testing Retention Components on Hinged Doors That Were Considered but Are Not Proposed
A. Hinged Side Door System Tests (Full Door Tests)
B. Combination Component Test
VIII. Door Closure and Operability Requirements
IX. Costs, Benefits, and the Proposed Effective Date
X. Differences Between the GTR and the NPRM
XI. Effective Date
XII. Regulatory Analysis and Notices
XIII. Public Comments

I. Executive Summary

Currently, door lock systems and door retention components on passenger cars, trucks, and multipurpose passenger vehicles must comply with a series of requirements established in FMVSS No. 206 in the early 1970s in order to minimize the ejections of occupants through side door openings. In 1995, these requirements were expanded to address back doors. While these requirements have significantly improved door performance over the level of pre-standard doors, occupants continue to be ejected through doors.

Given the sources and magnitude of the overall safety problem posed by ejections from vehicles, the agency intends to address the problem comprehensively, focusing on ejections through glazing as well as ejections through doors. Ejections through glazing (*i.e.*, ejections through a vehicle window) comprise 59 percent of all ejections and the data show that the greatest potential ejection mitigation benefits will come from reducing these ejections.[1] To address ejections through glazing, the agency has a multi-phase approach. The first phase is an upgrade to FMVSS No. 214, *Side impact protection*, which would likely induce vehicle manufacturers to use side curtains as a countermeasure. A proposal for that upgrade was issued earlier this year. In the next phase, we plan to propose occupant containment requirements for those side curtains in non-rollover crashes. Additional phases could include a study of the benefits of rollover sensors that would deploy the curtains when they sense an impending rollover.

Ejections through openings other than side glazing and doors, such as windshields, open convertible tops, and open truck beds comprise 26% of the ejections. It is hard for NHTSA to evaluate countermeasures designed to reduce ejections through these various paths, since the paths are through openings that are not on all vehicles, thus making it harder to obtain data. Further, there are not any potential countermeasures for the vehicles that have these openings. The remaining ejections are ejections through doors, which constitute the other 15 percent of the ejection problem, and are the focus of this proposal.

Crashes such as offset frontals, near side impacts, and especially rollovers,

[1] The scope of the safety problem is described in greater detail in section IV of this notice.

which pose the greatest risk of ejection for occupants, may lead to complex loading conditions to the vehicle door structure. In recognition of this, the agency tried to develop a new combination test that would subject the door latch components to simultaneously applied loads from different directions as occurs in rollover and other crashes in order to reduce related door ejections. We also wanted to update the existing requirements and test procedures established to ensure the strength of individual latch components for load conditions that are less complex, such as those that occur in many non-rollover collisions.

The agency's efforts to improve the requirements and test procedures of FMVSS 206 in order to address door ejections coincided with the adoption of the initial Program of Work under the 1998 Global Agreement.[2] That program includes door lock and door retention systems as one of the promising areas for the establishment of a global technical regulation (GTR). The agency sought to work collaboratively on door ejections with other contracting parties to the 1998 Global Agreement, particularly the European Union and Japan. Through the exchange of information on ongoing research and testing and through the leveraging of resources for testing and evaluations, the agency led successful efforts that culminated in the establishment of the first GTR under the 1998 Agreement. We believe that the provisions of the GTR, if adopted at the domestic level, would improve the current requirements and test procedures of FMVSS 206 and improve the door retention regulations of other countries.

The U.S., as a Contracting Party of the 1998 Global Agreement that voted in favor of establishing this GTR at the November 18, 2004 Session of the Executive Committee, is obligated under the Agreement to initiate the process for adopting the provisions of the GTR.[3] This proposal is closely based on the GTR.

NHTSA had anticipated that the GTR and this proposal would address both rollover related door ejections as well as non-rollover related door ejections. The problem of rollover related door ejections is significantly greater in the United States than in other countries. This is primarily due to the fact that light trucks, vans, and sport utility vehicles, which have a greater propensity for rollover than passenger cars, together comprise a larger portion of the U.S. vehicle fleet than they do of the vehicle fleets in other countries. Differences in safety belt use rates also play a role. Thus, other countries have not focused on developing and issuing regulations designed to prevent ejections through the door in rollover crashes. Nevertheless, the world community was willing to investigate ways to address complex loading conditions, as occur in rollover related door ejections. Specifically, countries participating in the development of the GTR helped to evaluate the new combination test procedure, which is intended to replicate the application of forces in the real world and in part address the rollover related door ejections. However, difficulties were encountered with following the test procedure due to the inability to conduct the test on some types of latches, thus rendering the procedure unusable. Our inability to proceed at this time with a combination test limited our focus in this rulemaking on improving non-rollover door ejections. However, the agency expects continued efforts to develop an alternative procedure for complex loading conditions, and hopes to be able to propose a requirement and procedure in the future. The agency will also continue to study the overall problem of rollover related ejections under its comprehensive rollover plan and will address them accordingly.

Non-rollover door ejections are the type of door ejections that the GTR, this proposal and the regulations of other countries are seeking to prevent. Even though non-rollover door ejections occur at a lower rate than rollover door ejections, the non-rollover door ejections account for 59 percent of all door ejections.

This proposal, if made final, would improve the current FMVSS No. 206 requirements in several areas. First and foremost, with respect to sliding doors, given that the existing standard has a door-in-frame requirement to test sliding door retention strength, but does not provide a test procedure, it would replace the existing requirement with new requirements and an associated full vehicle test procedure. It would also require that sliding side doors either have a secondary latched position, which serves as a backup to the fully latched position and increases the likelihood that a striker will remain engaged with the latch when the door is incompletely closed, or a visual telltale signaling that the door is not fully closed. The fully latched and secondary latched positions would also be load tested and would be required to meet inertial requirements the same way as the latches on hinged doors. Second, it would require a secondary latched position for double-doors, currently referred to as ''cargo-doors.'' This requirement already exists in the European and Japanese regulations. Third, it would add a dynamic inertial test procedure to FMVSS No. 206 as an optional alternative to the current inertial calculation. Such a test procedure is more representative of the real world and has been conducted in Europe for type approval purposes. Fourth, it would add new requirements for rear-hinged side doors to prevent potential inadvertent openings while the vehicle is moving. Finally, it would extend the application of FMVSS No. 206 to buses with a Gross Vehicle Weight Rating (GVWR) of 4,536 kg (10,000 pounds) or less, including 12–15 passenger vans. This last requirement addresses a uniquely U.S. issue and thus is not included in the GTR.

With the improvements proposed in this notice to address non-rollover door ejections, we estimate that we would prevent 7 deaths and 4 serious injuries, annually. These benefits come primarily from the changes to the sliding door requirements and test procedure.

The total costs of these proposals are estimated to be slightly over $8 million. All of those costs are associated with adding a second latch to those sliding doors that do not currently have one. Adding a second latch is necessary in order for sliding doors to meet the existing sliding door requirements when tested according to the new sliding door test procedure. The door retention components would need only small changes, if any. Vans currently meet the proposed secondary latch position requirement for double doors. We do not anticipate that the proposed inertial load test would add significant cost on manufacturing operations, particularly given that it would be an optional alternative.

Vehicle manufacturers, and ultimately, consumers, both here and abroad, can expect to achieve cost savings through the formal harmonization of differing sets of standards when the contracting parties to the 1998 Global Agreement implement the new GTR. Further, adopting amendments based on the GTR will not only result in improvements to the FMVSS No. 206, but also to the door

[2] The 1998 Global Agreement was concluded under the auspices of the United Nations and provides for the establishment of globally harmonized vehicle regulations. This Agreement, whose conclusion was spearheaded by the United States, entered into force in 2000 and is administered by the UN Economic Commission for Europe's World Forum for the Harmonization of Vehicle Regulations (WP.29).

[3] While the Agreement obligates such contracting parties to begin their processes, it leaves the ultimate decision of whether to adopt the GTR into their domestic law to the parties themselves.

lock and door retention component regulation of the United Nations' Economic Commission for Europe (ECE R.11), which is used by the majority of the world community. In addition to the sliding door test procedure, the rear-hinged side door requirements, and the inertial test procedure that are discussed above, ECE R. 11, when amended per the GTR, will benefit from the inclusion of back door requirements and rear door locking requirements. To date, those requirements have been in place only in the U.S. and Canada.

II. Background

As originally conceived, FMVSS No. 206 was intended to reduce the likelihood of occupant deaths and injuries resulting from ejections through door openings by keeping vehicle doors closed in crashes. The opening of these doors was primarily due to structural failures in the latch, striker, or hinges. Sheet metal failures in the door structure or the B-pillar were rare. In crashes involving the opening of doors, the latch, striker, and hinges were subjected to tensile and compressive forces along the vehicle's longitudinal (forward-to-aft) and lateral (side-to-side) axes. These force directions could cause the latch or striker to fail under as little as 5,000 newtons (N) of force. Based on these findings, the automotive community concluded that the most effective means of reducing door openings would be through increasing the strength of the door retention components. In 1964, the Society of Automotive Engineers (SAE) developed and issued the first test procedures designed to address door retention components: SAE Recommended Practice J839, *Passenger Car Side Door Latch Systems* (SAE J839); and SAE Recommended Practice J934, *Vehicle Passenger Door Hinge Systems* (SAE J934).

As initially issued in the early 1970's, FMVSS No. 206 was based, in large part, on the SAE recommended practices in existence at that time, except that we increased the recommended test force requirement in the lateral direction.[4] Aside from the changes made in 1995 to address back door openings, no significant changes have been made to the current regulation since the early 1970's. While these regulations were proven to be largely effective in the 1970's, ejections due to door openings continue to account for 15 percent of all ejections.

III. Current Requirements of FMVSS No. 206

FMVSS No. 206 applies to all passenger cars, trucks and multipurpose passenger vehicles, regardless of their GVWR, and provides that certain door retention components on any door leading directly into an occupant compartment, *i.e.*, a compartment containing seating accommodations for one or more occupants, must comply with the requirements of the standard. The standard excludes folding doors, roll-up doors, doors that are designed to be easily attached to or removed from vehicles manufactured for operation without doors, and side doors that are equipped with wheelchair lifts and that are linked to either an audible or visible alarm system that is activated when the doors are open.[5]

Hinged side door requirements. The standard requires that each latch on hinged side doors have both a fully latched and a secondary latched position.[6] In this notice, a latch with both a fully latched and a secondary latched position will be referred to as a ''primary door latch.'' As currently required, a primary door latch and striker cannot separate when a longitudinal force of 11,000 N (2,500 lb) or a lateral force of 8,900 N (2,000 lb) is applied while the components are fully engaged.[7] Also, a primary door latch with a striker will be referred to as a primary door latch system. During testing, the longitudinal force is applied to the primary door latch system perpendicular to the latch face. For conventional door latch systems,[8] this force is applied parallel to the vehicle's longitudinal axis. The longitudinal test is designed to simulate door openings in which the striker is pulled away from the latch faceplate. The lateral force is applied in the direction in which the door opens. The lateral procedure is intended to simulate door openings in which the striker is pulled away from the latch in that direction. The standard also requires that the coupled latch and striker may not separate when a longitudinal or a lateral force of 4,450 N (1,000 lb) is applied to the primary door latch system while in its secondary closure position.

Further, a hinged side door latch must not disengage from the fully latched position when an inertial force of 30 g is applied to the latch system in either the vehicle's longitudinal or the lateral axes.[9] Latch systems are subjected to inertial loading when the vehicle comes to an abrupt stop. This type of loading has the potential to release the latch even though the door latch may be undamaged. FMVSS No. 206 provides that demonstration of compliance with this requirement is to be accomplished either by following an agency-approved test procedure or by completing a mathematical formula specified in SAE J839. While NHTSA approved an inertial loading test procedure submitted by General Motors (GM) in 1967, it has never adopted such a procedure into the standard and no other test procedures were approved.

The standard also requires each hinge system[10] to support the door, and not separate when separate longitudinal (11,000 N (2,500 lb)) and lateral (8,900 N (2,000 lb)) forces are applied to the system.

Hinged side cargo doors. With slight modifications, hinged side door requirements are specified for the latch and hinge systems on hinged side cargo doors. Cargo door latch systems need not currently have a secondary latching system. A ''cargo-type door'' is defined in the standard as ''a door designed primarily to accommodate cargo loading including, but not limited to, a two-part door that latches to itself,'' and is typically designed with two doors that attach to one another. Because of the design of these doors, cargo door systems typically have more than one door latch. The standard requires that latches on a single door jointly resist the force loading in the lateral direction.

Back doors. Back door latches are tested in three directions: (1) The

[4] The force was increased to reduce the number of door openings resulting from occupant impacts on the interior of the door. SAE responded by adopting the same lateral force requirement in SAE J839.

[5] Door retention components on side doors equipped with wheelchair lifts that are linked to either a visual or audible warning were excluded from the standard in 1985. 50 FR 12029 March 27, 1985.

[6] The fully latched position keeps the striker, which is typically attached to the vehicle structure, firmly coupled with the latch, which is typically incorporated into the door. The secondary latched position serves as a backup to the fully latched position, increasing the likelihood that the striker will remain engaged with the latch when the door is incompletely closed.

[7] The latch is designed with a cam that has two closure positions. When the latch is fully engaged or fully closed, the opening in the latch is at its furthest position away from the striker.

[8] A conventional door latch system is one that is located at the rear portion of the door opening, as opposed to a system that is located at the bottom of the door opening.

[9] Inertia is the property of matter that requires that a force be applied on a body to accelerate it. An inertial force is a force resulting from acceleration of mass and is calculated by multiplying the mass of a body by its acceleration. In this instance, the inertial force relates to the force produced by accelerating the mass of the latching system and its components to an acceleration of 30 g.

[10] A hinge system is a system of one or more hinges. Under the standard, all hinges on a single door can be tested together to meet the required load.

direction of door opening, (2) perpendicular to the latch face and (3) orthogonal to the first two directions. By referencing the direction of the test loads to the latch instead of the vehicle, it allows the appropriate test load to be applied despite differences in orientation for back door latches. Also, while back doors are required to have at least one primary door latch, they may have other latches that do not have both a fully and secondary latched position.

Sliding doors. Unlike the types of doors described above, sliding doors are regulated under the current standard as integrated systems. All sliding door retention components, including the door, track and slide combination, or other supporting means, may not separate when a total lateral force of 17,792 N (4,000 lb) is applied to the entire system with the door in the closed position. There is no requirement that the door have a primary door latch system, or even a latch system with only a fully latched position. Rather, the entire door, with its door retention components, is tested. While vehicle manufacturers are required to certify compliance to this requirement, NHTSA has not conducted compliance tests on sliding doors because the standard does not have a test procedure for these doors.

IV. Scope of the Safety Problem

Based on a review of NASS and FARS data from 1995–2003, there were 5,023,879 vehicle occupants involved in tow away vehicle crashes on an annual basis; 54,082 of those occupants were ejected from their vehicle. *See* Table 1. In ejections in which the route of ejection is known, 59 percent of ejections occur through side glazing and 26 percent of the ejections occur through openings other than side glazing or doors (*i.e.*, convertible tops, sunroofs, windshields, open truck beds). The remaining, 15 percent of ejections occurred through a vehicle door. The rate of ejections through doors is heavily dependent on belt use. Of the serious injuries and fatalities attributable to ejections through doors in the U.S., 94 percent involve unbelted occupants.

To address the ejections through side glazing, the agency has indicated that we will initiate rulemaking within the next couple of years to establish occupant containment performance requirements for side air bags and side curtains now being incorporated into the vehicle fleet for side impact occupant protection. Ejections through openings other than side glazing and doors, such as windshields, open convertible tops, and open truck beds comprise 26 percent of the ejections. It is hard for NHTSA to evaluate countermeasures designed to reduce ejections through these various paths, since the path is through openings that are not on all vehicles and potential countermeasures are not apparent for the particular vehicle classification and use.

TABLE 1.—TOTAL EJECTIONS: 1995–2003 NASS AND FARS OCCUPANTS IN TOWED LIGHT DUTY VEHICLE CRASHES ADJUSTED FOR FATALITY AND DAMAGE AREA ON AN ANNUAL BASIS

	Total occupants	Unejected	All ejection	Rate (percent)	Ejection with unknown routes	Ejection with known routes
All crashes	5,023,879	4,969,797	54,082	1.08	3,078	51,004
Rollovers	444,267	410,420	33,847	7.62	2,399	31,448
Non-rollovers	4,579,612	4,559,377	20,235	0.44	680	19,555

TABLE 2.—EJECTION ROUTES

	Door ejections	Rate 1* (percent)	Rate 2** (percent)	Side glazing ejections	Rate 1* (percent)	Rate 2** (percent)	Other ejections	Rate 1* (percent)	Rate 2** (percent)
All crashes	7,622	0.16	14.94	29,877	0.63	58.58	13,505	0.29	26.48
Rollovers	3,089	0.75	9.82	19,098	4.63	60.73	9,261	2.24	29.45
Non-rollovers	4,533	0.10	23.18	10,779	0.24	55.12	4,243	0.10	21.70

* Rate 1 = [Rate 2 for (Ejections for Door, Glazing, or Other Route)] * [Rate for All Ejections].
[*Example:* For all crashes, the rate for Door Ejection = 14.94%*1.08% = 0.16%].
** Rate 2 = [(Ejections for Door, Glazing, or Other) / (All Ejections–Unknown Ejection Routes)].
[*Example:* For all crashes, the rate for Door Ejection with respect to Ejection with Known Routes = 7,622/51,004 = 14.94%].

In further analyzing the door ejections, the agency found that of the 15 percent (7,622) vehicle ejections that occurred through a door, 4,533 ejections occurred in non-rollover crashes (*i.e.*, frontal, side, and rear impact crashes) verses 3,089 ejections in rollover crashes. *See* Table 2. However, the data indicate that rollover crashes have a higher rate of ejection than non-rollover crashes, and that the rate for ejection through a vehicle door is also higher for rollover crashes, as opposed to non-rollover crashes. For all crashes, the rate for ejection in rollover crashes is 7.62 percent, verses 0.44 percent for non-rollover crashes. *See* Table 1. The rate for ejection through a door in rollover crashes is 0.75 percent.[11] Conversely, the rate for ejection through a door in non-rollover crashes is 0.10 percent[12]. *See* Table 2. The agency tried to address complex loading conditions such as those which can occur in rollover related door ejections by developing a new combination test that would subject the door latch components to simultaneously applied loads from different directions.[13] Further discussion of this test and the reasons it was not adopted are discussed in section VII.

Door ejections, due to non-rollover door openings, account for 23 percent of the total non-rollover ejections with known routes. A portion of these ejections occurs through sliding door openings and from doors in 12–15

[11] [door ejections in rollovers (3,089) / all door ejections through known routes in rollovers (31,448)] * [rate for all ejections in rollovers (7.62%)]

[12] [door ejections in non-rollovers (4,533) / all door ejections through known routes in non-rollovers (19,555)] * [rate for all ejections in rollovers (7.62%)]

[13] Complex combination loadings also occur in other, non-rollover crashes, for which the combination test was also intended to apply.

passenger vans. Of those ejected through a sliding door, each year approximately 20 people are killed and 30 people are seriously injured, based on the 1995–2003 data from NASS. In fact, based on the 2003 sales data, about 85 percent of vans sold in the U.S. have sliding doors. Only 15 percent of vans sold have double doors. Additionally, we are concerned that the individuals with the greatest exposure to sliding door failures are children. Children sit in the back of vehicles in disproportionately high numbers.[14] We do not believe that this exposure is acceptable when measures can be taken to minimize the likelihood that a sliding door would open in a crash. Finally, with the increasing popularity of vehicles with sliding doors on both the driver and passenger side of the vehicle, we expect the number of overall sliding door failures to increase unless they are required to be designed in a way that reduces the likelihood of a door opening.

V. Harmonization Efforts

The agency's efforts to update the requirements and test procedures of FMVSS No. 206 in order to address these safety issues coincided with the adoption of the initial Program of Work of the 1998 Global Agreement. Globally, there are several existing regulations, directives, and standards that pertain to door lock and door retention components. As all share similarities, the international motor vehicle safety community tentatively determined that these components might be amenable to the development of a GTR under the 1998 Global Agreement (1998 Agreement). During the 126th session of WP.29 of March 2002, the Executive Committee of the 1998 Agreement adopted a Program of Work, which included the development of a GTR to address inadvertent door opening in crashes. The Executive Committee also charged the Working Party on Passive Safety (GRSP) to form an informal working group to discuss and evaluate relevant issues concerning requirements for door locks and door retention components and to make recommendations regarding a potential GTR.[15] The informal working group was established in September 2002.

The United States of America (U.S.) volunteered to lead the group's efforts and develop a document detailing the recommended requirements for the GTR. The U.S., through this agency, sought to work collaboratively on door ejections with other contracting parties to the 1998 Global Agreement, particularly the European Union and Japan. The U.S. presented a formal proposal to develop the GTR to the Executive Committee of the 1998 Agreement, which was adopted in June 2003 (TRANS/WP.29/2003/49, this document has been placed in the docket). The GRSP then drafted the door locks and door retention GTR. The draft GTR was discussed in full at the December 2003 and the May 2004 GRSP meetings.

In developing language for the draft GTR, the GRSP considered all relevant standards, regulations, and directives. An analysis was made to identify the differences in the application, requirements, and test procedures of the North American and UNECE Regulations (TRANS/WP.29/2003/49).

The following regulations, directives and international voluntary standards were considered in drafting the GTR:

- UN/ECE Regulation 11—Uniform provisions concerning the approval of vehicles with regard to door latches and door retention components.
- U.S. Federal Motor Vehicle Safety Standard No. 206, Door locks and door retention components. (FMVSS No. 206)
- EU Directive 70/387/EEC, concerning the doors of motor vehicles and their trailers.
- Canada Motor Vehicle Safety Regulation No. 206—Door locks and door retention components. (CMVSS No. 206). [**Note:** The North American regulations FMVSS and CMVSS No. 206 are substantially similar].
- Japan Safety regulation for Road Vehicle Article 25.
- Australian Design Rule 2/00—Side Door Latches and Hinges.
- SAE J839, September 1998—Passenger Car Side Door Latch Systems.
- SAE J934, September 1998—Vehicle Passenger Door Hinge Systems.

The only significant differences between the sets of standards were found in FMVSS No. 206 and UN/ECE Regulation 11 (ECE R11). This is because the U.S. and Canadian standards mirror each other, as do the ECE and Japanese regulations. The Australian regulation combines elements of both sets of regulations. All regulations are largely based on SAE J839 and SAE J934.

In addition, the GRSP evaluated alternative requirements and test procedures developed and presented by the U.S. and Canada, as well as refinements suggested by other GRSP delegates and representatives. Details of the discussions can be found in the final progress report of the working group (TRANS/WP29/2004/70, *http://www.unece.org/trans/main/wp29/wp29wgs/wp29gen/gen2004.html,* document 2004/70, this document can be found in the docket). A draft GTR for door retention components was presented to the GRSP on May 3, 2004. The GRSP thoroughly discussed the draft and an amended copy was developed into a formal document (TRANS/WP29/2004/69, *http://www.unece.org/trans/main/wp29/wp29wgs/wp29gen/gen2004.html,* document 2004/69, this document can be found in the docket).

The GRSP concluded its work and agreed to recommend the establishment of this GTR to the Executive Committee. On November 18, 2004, the Executive Committee approved establishment of the GTR. The U.S., as a Contracting Party of the 1998 Agreement and voting in favor of establishing this global technical regulation, is obligated to initiate rulemaking to adopt the provisions of the GTR.

The established GTR provides improvements over the current FMVSS No. 206, as well as those regulations of other countries. With respect to sliding doors, given that the existing standards have a door-in-frame requirement to test sliding door retention strength but do not provide a test procedure, the GTR provides a replacement for the existing requirements and a new associated full vehicle test procedure. It also provides that sliding doors either have a secondary latched position or a visual telltale signalling that the door is not fully closed. For doors with rear mounted hinge systems, it would add new requirements to prevent potential inadvertent openings while a vehicle is moving. In addition, the GTR ensured that existing requirements that were either in the FMVSS or the ECE were included, such as back door, double doors and door lock requirements.

VI. Proposed Improvements to FMVSS No. 206

A. Hinged Doors Issues

1. Load Tests

We are not proposing significant changes to the existing requirements for latches on hinged side doors. FMVSS No. 206 requires load tests of the hinge systems in the longitudinal and transverse directions. In the GTR, these

[14] "Child Restraint use in 2002: Results from the 2002 NOPUS Controlled Intersection Study." *http://www-nrd.nhtsa.dot.gov/pdf/nrd-30/NCSA/Rpts/2003/ChildRestraints.pdf.*

[15] The GRSP is made up of delegates from many countries around the world, and who have voting privileges. Representatives from manufacturing and consumer groups also attend and participate in the GRSP and informal working groups that are developing GTRs. Those that chose not to participate are kept apprised of the GTR progress from progress reports presented at the GRSP meetings.

tests were retained, but the regulatory text was reworded to remove any implication that the load is applied relative to the vehicle orientation. In addition, the force levels specified in the GTR are the result of harmonization of FMVSS 206 and ECE R11 to eliminate variations due to rounding of unit conversions. Finally, the GTR requires a secondary latched position for ''double doors'', which are referred to as cargo-doors in FMVSS 206. To the extent a requirement for the secondary positions may prevent inadvertent door openings, we believe it would be beneficial for double doors. Currently, all vans with such doors have cargo doors with primary door latch systems, which includes secondary positions. Double doors generally have more than one latch system; the GTR also requires that the transverse requirement apply only to the primary door latch system and not auxiliary door latch systems. We are proposing that FMVSS 206 be amended to include these GTR requirements.

2. Inertial Test

The GTR has a provision for a full vehicle dynamic inertial test procedure, as an option to the inertial calculation. Currently, the FMVSS 206 has a provision that manufacturers may certify to an agency-approved test procedure. As discussed earlier, NHTSA approved a GM test procedure in the 1960s. Since that time, no other requests have been approved. Such an approach is inconsistent with the manner in which the agency has historically operated. Accordingly, we propose to replace the current ''agency-approved'' provision with the specified test procedure from the GTR that manufacturers may use for certification.

As in FMVSS No. 206, ECE R11 has a provision for a dynamic inertial loading test, but there is no specified test procedure. In the process of drafting the GTR, it was recommended that the test procedure be developed based on one type of testing currently conducted for ECE R11 type approval. The GTR test procedure was validated by the U.S. and Canada.[16] It places inertial forces on doors, either when installed in the vehicle or when tested on a test fixture, in the longitudinal and transverse directions. The agency is aware additional specificity may be required in characterizing the test fixture in order to avoid issues with the enforceability of the proposed procedure. The agency intends to discuss this issue with Transport Canada and the European laboratories that have conducted this test. The U.S. plans to adopt requirements and a procedure to accommodate this optional dynamic test and will incorporate in its compliance procedure a tolerance for the inertial load limits to account for minor deviations in conducting full vehicle or sled testing.

In addition to the longitudinal and transverse tests, tests in the vertical direction were considered. Conducting the inertial test in the vertical direction is feasible, but is much more difficult to conduct than the tests in the longitudinal and transverse directions. Since the most common failure mode demonstrated in the inertial tests conducted by Canada was in the direction of door opening,[17] the GRSP determined that a test in the vertical direction appeared to be beneficial only for back door designs, which commonly open in the vertical direction. Therefore, we are only proposing this optional test procedure in the vertical direction for back doors.

3. Door Hinges

The load testing requirements for door hinges in the GTR are the same as those currently in FMVSS 206 and ECE R11. The side door requirements for hinges, which are based on SAE Recommended Practice J934, *Vehicle Passenger Door Hinge Systems*, appear to test adequately the strength and design of door hinges. NHTSA has fully analyzed its crash data and possible failure modes associated with the failure of door retention components. We have not identified a significant safety problem with door hinges currently installed in vehicles. Accordingly, we are not proposing to change the requirements of FMVSS No. 206, although we are proposing to articulate the test procedure for door hinges rather than relying on a modified incorporation by reference of the applicable SAE J839 recommended practice.

B. Side Sliding Doors Issues

We are also proposing to amend the current sliding door requirement and add a sliding door test procedure to improve the standard and harmonize with the GTR. The current requirements and test procedures in both ECE R11 and the North American standards were incorporated in the GTR. This includes the ECE R11 requirements for the latch/striker systems. However, neither ECE R11 nor FMVSS No. 206 have a detailed full vehicle sliding door test procedure that simulates real world door openings in crashes.

The GTR requires that sliding doors have either a primary door latch system that meets the same requirements as primary door latch systems on hinged side doors, or a system with a fully latched position and a mechanism for determining when a sliding door is not fully latched. We propose to adopt the same latch system requirement. We are unaware of any sliding door designs that do not use some type of latch system. Accordingly, FMVSS No. 206 already has a mechanism for testing these latches. If the sliding door is not equipped with a primary door latch system, a latch system without a secondary latched position is permitted as long as the vehicle is equipped with a telltale that informs the driver of the vehicle that the door is not fully latched. We are proposing this requirement because we believe this approach will assure vehicle occupants that a sliding door is completely closed. We are unaware of any systems that do not already meet this requirement.

The absence of a test procedure for the current FMVSS No. 206 sliding side door requirements is an obvious area for revision. Both NHTSA and Transport Canada had been working on the development of this test procedure for some time. The procedure that was adopted in the GTR is based on a procedure that Transport Canada had developed. The test is intended to address door failures that occur in front, rear, and rollover crashes. Since the test produces some level of longitudinal force, in addition to the direct lateral loading, the door components deform and twist. Therefore it is likely that compliant door latch systems will be more robust than in the past.

The procedure involves a full vehicle test in which a sliding door is tested by applying force against the two edges of the door. The test setup is initiated by placing two loading plates against the interior of the door. The loading plates are placed adjacent to the latch/striker system located at the door edge. If the door edge has two latch/striker systems along one edge, the loading plate is placed between the two systems. If a door edge does not have a latch/striker system, the loading plate is placed at a point midway along the length of the door edge. An outward lateral force of 18,000 N total is then applied to the loading plates.

The proposed test procedure for the sliding door transverse loading test specifies that the force application device would be mounted on the vehicle floor. We are requesting comments on the appropriateness and feasibility of mounting the force

[16] *See* presentation from Transport Canada in the DOT Docket NHTSA–1999–3705.

[17] Id.

application device external to the vehicle being tested.

A test failure would be indicated by (1) a 100 mm separation of the interior of the door from the exterior of the vehicle's doorframe at any point, or (2) either force application device's reaching a total displacement of 300 mm. The GTR requires that there be no more than 100 mm of separation, even if the latch system does not fail, to account for partial ejections through separation of sliding doors from the frame without the latch system failing. The 100 mm limit is based on a commonly used measurement for maximum allowable open space in the U.S. and Canada for school bus opening requirements.

C. Door Locks

We are proposing to retain the existing requirements for door locks largely as is. However, two minor changes are proposed. First, we are distinguishing between exterior and interior door locks. All exterior door locks must be capable of being unlocked from the interior of the vehicle by means of a lock release device which, when engaged, shall prevent operation of the exterior door handle or other exterior latch release control and which has an operating means and a lock release/engagement device located within the interior of the vehicle. Interior door locks are subject to the same requirements except that for rear side doors and back doors, this release mechanism must require a separate action distinct from the simple actuation of the door handle, and the release device must be readily accessible to the driver of the vehicle or an occupant seated adjacent to the door. The reason for differentiating between interior and exterior locks is that automatic door locks actually have two separate door lock devices, which may or may not use the same release device. For manual locks, there would be only one lock that secures the latch from both the interior and the exterior of the vehicle.

D. Applicability to Buses

We are proposing to extend the applicability of FMVSS No. 206 to buses with a GVWR of less than 10,000 lb. Historically, FMVSS No. 206 has not applied to buses because the types of doors installed on buses in the 1960s were not amenable to testing under the standard. However, with the advent of 12- and 15-passenger vans, smaller buses may now be equipped with traditional side hinged doors. There does not appear to be any reason not to subject these doors to the requirements of FMVSS No. 206, just as the doors on passenger cars and all trucks, regardless of weight, are currently regulated. We have developed a definition of a folding door that we believe will accommodate those types of bus doors that remain unsuitable for testing. While the standard has always exempted folding doors, it has never defined them. We anticipate that the impact of the extension will have little additional cost to vehicle manufacturers in meeting compliance. The agency is aware that all 12–15 passenger vans currently share the same door system and latching components as other smaller size vans, which already meet the requirements of our standard.

E. Summary of Improvements

This proposal, if made final, would improve the current FMVSS No. 206 requirements in several areas. First and foremost, with respect to sliding doors, given that the existing standard has a door in frame requirement to test sliding door retention strength but does not provide a test procedure, it would replace the existing requirement with new requirements and an associated full vehicle test procedure. It would also require that sliding doors either have a secondary latched position or a visual telltale signaling that the door is not fully closed. The fully latched and secondary latched positions would also be load tested and would be required to meet inertial requirements the same way as the latches on hinged doors. Second, it would require a secondary latched position for double-doors, currently referred to as ''cargo-doors.'' This requirement already exists in the European and Japanese regulations. Third, it would add a dynamic inertial test procedure to FMVSS No. 206 as an optional alternative to the current inertial calculation. Such a test procedure is more representative of the real world and has been conducted in Europe for type approval purposes. Fourth, it would add new requirements for rear-hinged side doors to prevent potential inadvertent opening while a vehicle is moving. Finally, it would extend the application of FMVSS No. 206 to buses with a Gross Vehicle Weight Rating (GVWR) of 4,536 kg (10,000 pounds) or less, including 12–15 passenger vans.

VII. Alternative Approaches to Testing Retention Components on Hinged Doors That Were Considered but Are Not Proposed

The agency has developed a series of new test procedures designed to simulate real world door opening in crashes. These tests consist of two door-in-frame quasi-static (full door) tests and a bench-type component test, known as the combination test. However, because of issues regarding (1) the practicability of the tests, and (2) complications in developing the compliance tests, we are not proposing them in this document.

A. Hinged Side Door System Tests (Full Door Tests)

The agency has designed lateral and longitudinal full door tests in which a vehicle door is placed in a test frame as opposed to remaining on the vehicle. The lateral full door test is designed to simulate latch failures in crashes that produce outward forces on the door (*i.e.*, through occupant loading or inertial loading) such as side crashes that result in vehicle spin and rollover. The longitudinal full door test is designed to simulate a collision in which the side of the vehicle is stretched, leading to the possibility that the striker could be torn from its mated latch (*i.e.*, far side door in side impacts, and front and rear offset crashes on the opposite side door).

We have decided against proposing these full door tests because they create undue restrictions on certain door designs and have an unenforceable test procedure. Additionally, we have determined that even if the problems could be resolved, it is unlikely that the full door tests would provide additional value over the existing component tests.

In addition, as part of the GTR drafting process, some GSRP delegates and representatives independently evaluated the contemplated test procedures. They expressed concern that the new procedure would be unduly design restrictive, given the limitations of the test frame. For example, it could be complicated to construct test frames individualized to each available door system design. A test frame may not be representative of real world conditions, in which a door system design may incorporate advanced devices such as door clips or door interlocks.[18] Additionally, building a test frame to adequately address new latch designs that may be mounted in non-traditional locations may be difficult. Likewise, the procedures do not allow manufacturers to use door trim that provides structural support to the door because of the need to remove the trim to accommodate placement of the loading device.

By the same token, conducting the proposed tests on the full vehicle may

[18] Door clips and interlocks are devices that are built into the door frame and attach to the door to retain and prevent the door from intruding into the vehicle when impacted.

be impractical because not all loads can be applied to a closed door. Alternatively, it may be possible to cut away the door frame and attach it to the test frame. However, such an approach may not fully replicate the actual door-in-frame as installed in the vehicle since cutting the door frame may change its characteristics. This approach would require that the agency develop an acceptable procedure for cutting away the vehicle door system in such a way to address the fit between the latch and striker, as well as the physical characteristics of the door and the doorframe. The agency decided that expending additional effort on this was not warranted given the small number of potential benefits.

B. Combination Component Test

NHTSA also developed a new component test that would require simultaneous application of two loads. In theory, the combination test procedure is representative of the combination of longitudinal compressive and lateral tensile forces that occur in real-world latch failures. Currently, no regulation, directive, or international voluntary standard has such a requirement. Examples of the types of crashes in which such forces could occur are rollover crashes and crashes in which either the front or the rear of the vehicle is impacted (including in an offset mode). The combination test procedure is a static bench test that may be capable of evaluating the strength of the latching systems.

Unlike the full door tests discussed immediately above, NHTSA's initial and current evaluation of the combination test procedure and existing crash data indicate that the procedure may reduce a substantial number of door openings at a level that is statistically significant. No other test procedure within FMVSS No. 206 or ECE R11 simulates these types of latch failure conditions. For these reasons, the combination test procedure was considered for inclusion in the GTR. There was significant support from GRSP delegates and representatives for a test that addresses the door failure modes represented by this test. However, in some vehicles, the test setup is such that the striker cannot interface with the faceplate of the latch, rendering the test meaningless.[19] While it is possible to (1) modify the striker portion of the latch system so that the test can be conducted, or (2) test using a full vehicle, the GRSP delegates and representatives expressed strong concern regarding the adoption of this type of procedure and its potential for enforceability questions. NHTSA shares these concerns. A test procedure that cannot be conducted in an objective manner from vehicle to vehicle is problematic in terms of enforcement. Thus, while NHTSA expects a test procedure that addresses the retention failures identified by the combination test to be pursued, we do not presently believe we have a test procedure that can be incorporated into a motor vehicle safety standard.

However, there is widespread support in the international community for a test that addresses the door failure modes and potential benefits represented by the combination test. Therefore, the GRSP delegates and representatives agreed to continue to review work on the modification of the U.S.-based procedure, as well as to look for other new procedures to capture the benefits associated with door failures due to simultaneous compressive longitudinal and tensile lateral loading of latch systems in real world crashes. Any acceptable procedure developed, if practicable and enforceable, could then be added to the GTR as an amendment. We seek comments on other viable procedures that could be considered for simultaneous combination of loading of the latch systems. Please provide sufficient detail on the procedure(s) and support test data.

VIII. Door Closure and Operability Requirements

Currently, FMVSS No. 206 does not have door retention and door operability requirements in dynamic crash tests. At present, the agency has door retention requirements and evaluates door closure as part of FMVSS No. 208, ''Frontal Occupant Protection,'' which requires that the doors be retained and the test dummies remain in the vehicle until both the vehicle and the dummies have ceased moving after the test. FMVSS No. 214 also contains retention requirements for doors struck by a movable deformable barrier in testing under the standard to remain attached to the vehicle, as well as a requirement for non-struck doors to remain closed during and after crashes. However, the standards do not have a test procedure for evaluating these requirements in dynamic crash testing.

The GTR and ECE R11 do not contain requirements for door retention and door operability. The European Union has requirements to evaluate door retention and door operability in their frontal and side impact standards (ECE R94 and ECE R95). However, as in the U.S., the European Union also does not have established compliance procedures for compliance with these requirements.

The agency has developed test procedures for evaluating door retention and door operability requirements for dynamically tested vehicles in frontal and side impacts. Following validation of these procedures, the agency plans address the door operability and retention issues in a separate notice.

IX. Costs, Benefits, and the Proposed Effective Date

This proposal, if made final, would add and update test procedures for door latches. We believe that only one of these, a new sliding door test procedure for FMVSS No. 206 would add costs to vehicles and provide quantifiable benefits for consumers. There were almost 1.4 million vans sold in 2003 that had sliding doors. The sliding door test procedure essentially requires sliding doors to have two latches. An estimated 660,000 vans with 1.2 million sliding doors need a second latch to comply. The incremental cost of adding a second latch is estimated to average $7.00 per door. Total costs are estimated at $8.4 million (in 2003 economics).

The average annual ejections through sliding doors from 1995–2003 resulted in 20 fatalities and 30 injuries. When an occupant is retained in a vehicle and the ejection is eliminated, it does not necessarily mean that the occupant escapes injury. When all vehicles with sliding doors meet this proposal, annually an estimated 7 fatalities and 4 occupants with serious to severe injuries would be reduced in severity to minor injuries (AIS 1) as a result of remaining inside the vehicle.

The agency has tentatively determined that, aside from sliding doors that will require the addition of a second latch, the current vehicle fleet would comply with the proposal, if made final. Therefore, we are proposing a lead time of two complete model years from when a final rule is published. For example, if a final rule were adopted on December 1, 2005, the rule would be effective beginning September 1, 2008. We believe that this would provide manufacturers adequate time to make the necessary design changes. Optional early compliance would be permitted on and after the date of publication of the final rule in the **Federal Register**.

X. Differences Between the GTR and the NPRM

This NPRM fulfills our obligation to initiate domestic rulemaking to adopt the provisions of the GTR. With the exception of minor differences, the

[19] See Transport Canada presentation on testing in Docket NHTSA–1999–3705 and VRTC report second series (in preparation).

NPRM is based closely on the GTR. These minor differences are as follows:

• The NPRM proposes application to 12- and 15-passenger vans and smaller buses under 10,000 lb with hinged or sliding doors; the GTR does not. This reflects the fact that these vehicles comprise a larger portion of the U.S. vehicle fleet than when compared globally.

• The NPRM proposes to maintain, but clarify the language of the current requirements of FMVSS No. 206 for rear side door locks. The GTR allows for an option of the rear door lock system meeting either the current FMVSS No. 206 requirement or requiring a system that allows the door to be unlocked and opened with a simple actuation of the interior door handle as long as there is a child safety lock. These options for the rear side door lock system in the GTR address the need for egress from a rear seat, while respecting the need to prevent children from opening a locked door. In the GTR, neither type of system is prohibited as a supplemental safety device. It was left to a country's discretion which system would be required as the primary safety device. The NPRM does not prohibit child safety locks as a supplemental system.

• The GTR also allows the option of the sliding door tests to be performed on either a vehicle or door body-in-white (*i.e.*, pre-production), or the post-production door or vehicle. The body-in-white option is important for countries that certify components and vehicles under a type approval system. Since the U.S. does not use a type approval system and conducting these tests on body-in-white vehicles or doors would create enforceability issues, the NPRM specifies that the tests be conducted on the post-production vehicle or door.

The GRSP and the WP.29 are aware that the U.S. intended to deviate from the GTR in these areas. Regardless of these minor differences, we believe that the provisions of the GTR, if adopted, would improve vehicle safety here in the United States and abroad.

XI. Regulatory Analyses and Notices

A. Vehicle Safety Act

Under 49 U.S.C. Chapter 301, *Motor Vehicle Safety* (49 U.S.C. 30101 *et seq.*), the Secretary of Transportation is responsible for prescribing motor vehicle safety standards that are practicable, meet the need for motor vehicle safety, and are stated in objective terms. 49 U.S.C. 30111(a). When prescribing such standards, the Secretary must consider all relevant, available motor vehicle safety information. 49 U.S.C. 30111(b). The Secretary must also consider whether a proposed standard is reasonable, practicable, and appropriate for the type of motor vehicle or motor vehicle equipment for which it is prescribed and the extent to which the standard will further the statutory purpose of reducing traffic accidents and associated deaths. *Id*. Responsibility for promulgation of Federal motor vehicle safety standards was subsequently delegated to NHTSA. 49 U.S.C. 105 and 322; delegation of authority at 49 CFR 1.50.

The agency carefully considered these statutory requirements in proposing these amendments to FMVSS Nos. 206 and 214.

We believe that the proposed amendments to FMVSS No. 206 will be practicable. This document does not propose significant changes to the current requirements of FMVSS No. 206. Currently, 40 percent of the sliding doors will pass the proposed test. Additionally, if made final, the amendments would harmonize the U.S. requirements with the global technical regulation.

We believe that this proposed rule would be appropriate for the vehicles subject to the requirements. If adopted, the proposal would continue to exclude vehicle doors for which the requirements and test procedures are impractical or unnecessary (*e.g.*, folding doors, roll-up-doors).

Finally, the agency has tentatively determined that the proposed amendments would provide objective procedures for determining compliance. The proposed test procedures have been evaluated by the agency, and we have tentatively determined that they produce repeatable and reproducible results. The sliding door load test procedure and the inertial test procedure have been vetted by the international automotive community, which has determined them to be acceptable. Further, we are proposing test procedures to provide additional objectivity to existing requirements.

B. Executive Order 12866 and DOT Regulatory Policies and Procedures

Executive Order 12866, ''Regulatory Planning and Review'' (58 FR 51735, October 4, 1993), provides for making determinations whether a regulatory action is ''significant'' and therefore subject to Office of Management and Budget (OMB) review and to the requirements of the Executive Order. The Order defines a ''significant regulatory action'' as one that is likely to result in a rule that may:

(1) Have an annual effect on the economy of $100 million or more or adversely affect in a material way the economy, a sector of the economy, productivity, competition, jobs, the environment, public health or safety, or State, local, or tribal governments or communities;

(2) Create a serious inconsistency or otherwise interfere with an action taken or planned by another agency;

(3) Materially alter the budgetary impact of entitlements, grants, user fees, or loan programs or the rights and obligations of recipients thereof; or

(4) Raise novel legal or policy issues arising out of legal mandates, the President's priorities, or the principles set forth in the Executive Order.

We have considered the impact of this rulemaking action under Executive Order 12866 and the Department of Transportation's regulatory policies and procedures. This rulemaking would not have an annual effect on the economy of $100 million or more, but is significant due to public interest in the issues. Therefore, this document was reviewed by the Office of Management and Budget under E.O. 12866, ''Regulatory Planning and Review.'' This document would amend 49 CFR part 571.206 by adding new performance requirements for hinged side doors and a new compliance test procedure for side sliding doors. These requirements would have to be met by vehicle manufacturers.

The estimated cost of the new requirements, if adopted, would be minor. We have estimated the cost of modifications for sliding doors with one latch at $7.00 per door, for a total cost to the entire fleet of approximately $8.4 million (2003 dollars). For a further explanation of the estimated costs, *see* the Preliminary Regulatory Evaluation provided in the docket for this proposal.

C. Executive Order 13132

Executive Order 13132 requires NHTSA to develop an accountable process to ensure ''meaningful and timely input by State and local officials in the development of regulatory policies that have federalism implications.'' ''Policies that have federalism implications'' is defined in the Executive Order to include regulations that have ''substantial direct effects on the States, on the relationship between the National Government and the States, or on the distribution of power and responsibilities among the various levels of government.'' Under Executive Order 13132, the agency may not issue a regulation with federalism implications, that imposes substantial direct compliance costs, and that is not

required by statute, unless the Federal Government provides the funds necessary to pay the direct compliance costs incurred by State and local governments, the agency consults with State and local governments, or the agency consults with State and local officials early in the process of developing the proposed regulation. NHTSA also may not issue a regulation with federalism implications and that preempts State law unless the agency consults with State and local officials early in the process of developing the proposed regulation.

We have analyzed this rule in accordance with the principles and criteria set forth in Executive Order 13132 and have determined that this rule does not have sufficient Federal implications to warrant consultation with State and local officials or the preparation of a federalism summary impact statement. The rule would not have any substantial impact on the States, or on the current Federal-State relationship, or on the current distribution of power and responsibilities among the various local officials.

D. Executive Order 13045

Executive Order 13045 (62 FR 19885, April 23, 1997) applies to any rulemaking that: (1) is determined to be ''economically significant'' as defined under E.O. 12866, and (2) concerns an environmental, health or safety risk that NHTSA has reason to believe may have a disproportionate effect on children. If the regulatory action meets both criteria, we must evaluate the environmental health or safety effects of the planned rule on children, and explain why the planned regulation is preferable to other potentially effective and reasonably feasible alternatives considered by us.

This rulemaking is not subject to the Executive Order because it is not economically significant as defined in E.O. 12866. It also does not involve decisions based on health risks that disproportionately affect children.

E. Executive Order 12778

Pursuant to Executive Order 12778, ''Civil Justice Reform,'' we have considered whether this proposed rule would have any retroactive effect. This proposed rule, if adopted, would not have any retroactive effect. A petition for reconsideration or other administrative proceeding will not be a prerequisite to an action seeking judicial review of this rule if it is adopted. This proposed rule would not preempt the states from adopting laws or regulations on the same subject, except that it would preempt a State regulation that is in actual conflict with the Federal regulation or makes compliance with the Federal regulation impossible or interferes with the implementation of the Federal statute.

F. Regulatory Flexibility Act

Pursuant to the Regulatory Flexibility Act (5 U.S.C. 601 *et seq.*, as amended by the Small Business Regulatory Enforcement Fairness Act (SBREFA) of 1996) whenever an agency is required to publish a notice of rulemaking for any proposed or final rule, it must prepare and make available for public comment a regulatory flexibility analysis that describes the effect of the rule on small entities (*i.e.*, small businesses, small organizations, and small governmental jurisdictions). However, no regulatory flexibility analysis is required if the head of an agency certifies the rule would not have a significant economic impact on a substantial number of small entities. SBREFA amended the Regulatory Flexibility Act to require Federal agencies to provide a statement of the factual basis for certifying that a rule would not have a significant economic impact on a substantial number of small entities.

I have considered the effects of this rulemaking action under the Regulatory Flexibility Act (5 U.S.C. 601 *et seq.*) and certify that this proposal would not have a significant economic impact on a substantial number of small entities. Vehicle manufacturers typically have their door latches designed and produced by wholly-owned subsidiaries. Accordingly, there are very few independent vehicle door latch manufacturers.

G. National Environmental Policy Act

We have analyzed this proposed amendment for the purposes of the National Environmental Policy Act and determined that it would not have any significant impact on the quality of the human environment.

H. Paperwork Reduction Act

Under the Paperwork Reduction Act of 1995, a person is not required to respond to a collection of information by a Federal agency unless the collection displays a valid OMB control number. The proposed rule does not contain any new information collection requirements.

I. National Technology Transfer and Advancement Act

Section 12(d) of the National Technology Transfer and Advancement Act of 1995 (NTTAA), Public Law 104–113, section 12(d) (15 U.S.C. 272) directs us to use voluntary consensus standards in its regulatory activities unless doing so would be inconsistent with applicable law or otherwise impractical. Voluntary consensus standards are technical standards (*e.g.*, materials specifications, test methods, sampling procedures, and business practices) that are developed or adopted by voluntary consensus standards bodies, such as the Society of Automotive Engineers (SAE). The NTTAA directs us to provide Congress, through OMB, explanations when we decide not to use available and applicable voluntary consensus standards.

No voluntary consensus standards were used in developing the proposed requirements because no voluntary standards exist that address the subject of this rulemaking. However, the SAE Recommended Practice J934, September 1998, *Vehicle Passenger Door Hinge Systems* and SAE Recommended Practice J839, September 1998, *Passenger Car Side Door Latch Systems* would continue to be incorporated by reference in the regulatory text.

J. Unfunded Mandates Reform Act

Section 202 of the Unfunded Mandates Reform Act of 1995 (UMRA) requires Federal agencies to prepare a written assessment of the costs, benefits and other effects of proposed or final rules that include a Federal mandate likely to result in the expenditure by State, local or tribal governments, in the aggregate, or by the private sector, of more than $100 million in any one year (adjusted for inflation with base year of 1995). Before promulgating a NHTSA rule for which a written statement is needed, section 205 of the UMRA generally requires us to identify and consider a reasonable number of regulatory alternatives and adopt the least costly, most cost-effective or least burdensome alternative that achieves the objectives of the rule. The provisions of section 205 do not apply when they are inconsistent with applicable law. Moreover, section 205 allows us to adopt an alternative other than the least costly, most cost-effective or least burdensome alternative if we publish with the final rule an explanation why that alternative was not adopted.

The proposed rule would not impose any unfunded mandates under the Unfunded Mandates Reform Act of 1995. This rulemaking does not meet the definition of a Federal mandate because it would not result in costs of $100 million or more to either State, local, or tribal governments, in the aggregate, or to the private sector. Thus, this rulemaking is not subject to the

requirements of sections 202 and 205 of the UMRA.

K. Regulation Identifier Number (RIN)

The Department of Transportation assigns a regulation identifier number (RIN) to each regulatory action listed in the Unified Agenda of Federal Regulations. The Regulatory Information Service Center publishes the Unified Agenda in April and October of each year. You may use the RIN contained in the heading at the beginning of this document to find this action in the Unified Agenda.

XII. Public Comments

How Do I Prepare and Submit Comments?

Your comments must be written and in English. To ensure that your comments are correctly filed in the Docket, please include the docket number of this document in your comments.

Your comments must not be more than 15 pages long. (49 CFR 553.21). We established this limit to encourage you to write your primary comments in a concise fashion. However, you may attach necessary additional documents to your comments. There is no limit on the length of the attachments.

Please submit two copies of your comments, including the attachments, to Docket Management at the address given above under **ADDRESSES**.

How Can I Be Sure That My Comments Were Received?

If you wish Docket Management to notify you upon its receipt of your comments, enclose a self-addressed, stamped postcard in the envelope containing your comments. Upon receiving your comments, Docket Management will return the postcard by mail.

How Do I Submit Confidential Business Information?

If you wish to submit any information under a claim of confidentiality, you should submit three copies of your complete submission, including the information you claim to be confidential business information, to the Chief Counsel, NHTSA, at the address given above under **FOR FURTHER INFORMATION CONTACT**. In addition, you should submit two copies, from which you have deleted the claimed confidential business information, to Docket Management at the address given above under **ADDRESSES.** When you send a comment containing information claimed to be confidential business information, you should include a cover letter setting forth the information specified in our confidential business information regulation. (49 CFR part 512.)

Will the Agency Consider Late Comments?

We will consider all comments that Docket Management receives before the close of business on the comment closing date indicated above under **DATES**. To the extent possible, we will also consider comments that Docket Management receives after that date. If Docket Management receives a comment too late for us to consider it in developing a final rule (assuming that one is issued), we will consider that comment as an informal suggestion for future rulemaking action.

How Can I Read the Comments Submitted by Other People?

You may read the comments received by Docket Management at the address given above under **ADDRESSES**. The hours of the Docket are indicated above in the same location.

You may also see the comments on the Internet. To read the comments on the Internet, take the following steps:

- Go to the Docket Management System (DMS) Web page of the Department of Transportation (*http://dms.dot.gov/*).
- On that page, click on ''search.''
- On the next page (*http://dms.dot.gov/search/*), type in the four-digit docket number shown at the beginning of this document. Example: If the docket number were ''NHTSA–1998–1234,'' you would type ''1234.'' After typing the docket number, click on ''search.''
- On the next page, which contains docket summary information for the docket you selected, click on the desired comments. You may download the comments.

Please note that even after the comment closing date, we will continue to file relevant information in the Docket as it becomes available. Further, some people may submit late comments. Accordingly, we recommend that you periodically check the Docket for new material.

Anyone is able to search the electronic form of all comments received into any of our dockets by the name of the individual submitting the comment (or signing the comment, if submitted on behalf of an association, business, labor union, etc.). You may review DOT's complete Privacy Act Statement in the **Federal Register** published on April 11, 2000 (Volume 65, Number 70; Pages 19477–78) or you may visit *http://dms.dot.gov.*

List of Subjects in 49 CFR Part 571

Motor vehicle safety, Reporting and recordkeeping requirements, and Tires.

In consideration of the foregoing, NHTSA proposes to amend 49 CFR part 571.206 as follows:

PART 571—FEDERAL MOTOR VEHICLE SAFETY STANDARDS

1. The authority citation for part 571 would continue to read as follows:

Authority: 49 U.S.C. 322, 30111, 30115, 30117 and 30166; delegation of authority at 49 CFR 1.50.

2. 49 CFR 571.206 would be amended by:

a. Revising S1; S2; the definitions of ''auxiliary door latch,'' ''back door,'' ''fork-bolt,'' ''primary door latch,'' ''side front door,'' ''side rear door,'' and ''trunk lid'' in S3; S4 through S4.1.1.3; S4.1.2; S4.2 through S4.2.1.2; S4.2.2; S4.3; S5.1 through S5.1.1.2; S5.1.2; S5.2; S5.2.1; S5.2.2; Figure 1; and

b. Adding ''auxiliary door latch system,'' ''body member,'' 'door closure warning system,'' ''door hinge system,'' ''door latch system,'' ''door member,'' ''door system,'' ''double door,'' ''folding door,'' ''force application zone,'' ''fork-bolt opening direction,'' ''fully-latched position,'' ''hinge,'' ''hinge pin,'' ''latch,'' ''primary door latch system,'' ''secondary latched position,'' ''striker,'' to the definitions in S3; S4.1.1.4; S4.1.2.1 through S4.1.2.3; S4.2.1.3; S4.2.2.1; S4.2.2.2; S4.3.1; S4.3.2; S5; S5.1.1.3; S5.1.1.4; S5.1.2.1 through S5.1.2.4; S5.2.1.1 through S5.2.1.4; S5.2.2.1 through S5.2.2.4; S5.3; Figures 2 through 4, Table 1, Figures 5 through 9; and

c. Removing ''cargo-type door'' and ''fork-bolt opening'' from the definitions in S3, S4.1.3, S4.1.3.1, S4.4 through S4.5, S5.4 through S5.5.

The revisions and additions read as follows:

§ 571.206 Standard No. 206; Door locks and door retention components.

S1. *Scope and Purpose.* This regulation specifies requirements for vehicle door locks and door retention components, including latches, hinges, and other supporting means, to minimize the likelihood of occupants being ejected from a vehicle as a result of impact.

S2. *Application.* This regulation applies to vehicle door locks and door retention components on side or back doors that lead directly into a compartment that contains one or more seating accommodations in passenger cars, multipurpose vehicles, and trucks and in buses with a gross vehicle weight rating (GVWR) of 4,536 kg or less.

S3. *Definitions.*

Auxiliary door latch is a latch equipped with a fully latched position and fitted to a door or door system equipped with a primary door latch system.

Auxiliary door latch system consists, at a minimum, of an auxiliary door latch and a striker.

Back door is a door or door system on the back end of a motor vehicle through which passengers can enter or depart the vehicle or cargo can be loaded or unloaded. It does not include:

(a) A trunk lid; or

(b) A door or window composed entirely of glazing material and whose latches and/or hinge systems are attached directly to the glazing material.

Body member is that portion of the hinge normally affixed to the body structure.

* * * * *

Door closure warning system is a system that will activate a visual signal located where it can be clearly seen by the driver when a door latch system is not in its fully latched position and while the vehicle ignition is activated.

Door hinge system is one or more hinges used to support a door.

Door latch system consists, at a minimum, of a latch and a striker.

Door member is that portion of the hinge normally affixed to the door structure and constituting the swinging member.

Door system is the door, latch, striker, hinges, sliding track combinations and other door retention components on a door and its surrounding doorframe. The door system of a double door includes both doors.

Double door is a system of two doors where the front door or wing door opens first and connects to the rear door or bolted door, which opens second.

Folding door is a movable barrier, which will close off an entranceway to a bus, multipurpose passenger vehicle or truck, consisting of two or more hinge panels that swing, slide, or rotate; does not have a striker and latch assembly; and is normally controlled from a location adjacent to the vehicle's driver seat.

Force application zone is defined by a rectangular area on the door or rear hatch bounded by the projection onto the door or hatch exterior of two vertical lines, 25 mm on either side of the right or left edges of the exterior handle or the latch release handle, and the projection of two horizontal lines 10 mm and 110 mm below the lowest point of the exterior door handle or the latch release handle. In the event there is insufficient space below the release handle the force application zone shall be located above the release handle.

Fork-bolt is the part of the latch that engages and retains the striker when in a latched position.

Fork-bolt opening direction is the direction opposite to that in which the striker enters the latch to engage the fork-bolt.

Fully latched position is the coupling condition of the latch that retains the door in a completely closed position.

Hinge is a device system used to position the door relative to the body structure and control the path of the door swing for passenger ingress and egress.

Hinge pin is that portion of the hinge normally interconnecting the body and door members and establishing the swing axis.

Latch is a device employed to maintain the door in a closed position relative to the vehicle body with provisions for deliberate release (or operation).

Primary door latch is a latch equipped with both a fully latched position and a secondary latched position.

Primary door latch system consists, at a minimum, of a primary door latch and a striker.

Secondary latched position refers to the coupling condition of the latch that retains the door in a partially closed position.

Side front door is a door that, in a side view, has 50 percent or more of its opening area forward of the rearmost point on the driver's seat back, when the seat back is adjusted to its most vertical and rearward position.

Side rear door is a door that, in a side view, has 50 percent or more of its opening area to the rear of the rearmost point on the driver's seat back, when the driver's seat is adjusted to its most vertical and rearward position.

Striker is a device with which the latch engages to maintain the door in the fully latched or secondary latched position.

Trunk lid is a movable body panel that provides access from outside the vehicle to a space wholly partitioned from the occupant compartment by a permanently attached partition or fixed or fold-down seat back.

S4. *Requirements.* The requirements apply to all side and back doors and door components except for those on folding doors, roll-up doors, detachable doors, and doors that are designated to provide emergency egress.

S4.1 *Hinged Doors.*

S4.1.1 *Primary Door Latch System.* Each hinged door system shall be equipped with at least one primary door latch system.

S4.1.1.1 *Load Test One.*

(a) Each primary door latch system and auxiliary door latch system, when in the fully latched position, shall not separate when a load of 11,000 N is applied in the direction perpendicular to the face of the latch such that the latch and the striker anchorage are not compressed against each other, when tested in accordance with S5.1.1.1.

(b) When in the secondary latched position, the primary door latch system shall not separate when a load of 4,500 N is applied in the same direction specified in paragraph (a) of this section when demonstrated in accordance with S5.1.1.1.

S4.1.1.2 *Load Test Two.*

(a) Each primary door latch system and auxiliary door latch system, when in the fully latched position, shall not separate when a load of 9,000 N is applied in the fork-bolt opening direction and parallel to the face of the latch, when demonstrated in accordance with S5.1.1.2.

(b) When in the secondary latched position, the primary door latch system shall not separate when a load of 4,500 N is applied in the same direction specified in (a) when demonstrated in accordance with S5.1.1.2.

S4.1.1.3 *Load Test Three.* Each primary door latch system on back doors shall not disengage from the fully latched position when a load of 9,000 N is applied in a direction orthogonal to the directions specified in S4.1.1.1 and S4.1.1.2 when tested in accordance with S5.1.1.3.

S4.1.1.4 *Inertial Load.* Each primary door latch system and auxiliary door latch system shall meet either the dynamic requirements specified in paragraphs (a) and (b) of this section or the calculation of inertial load resistance specified in paragraph (c) of this section.

(a) Each primary door latch and auxiliary door latch on each hinged door shall not disengage from the fully latched position when an inertia load of 30 g is applied to the door latch system, including the latch and its activation device, in the directions parallel to the vehicle's longitudinal and transverse axes with the locking device disengaged and demonstrated in accordance with S5.1.1.4.

(b) Each primary door latch and auxiliary door latch on each hinged back door shall also not disengage from the fully latched position when an inertia load of 30g is applied to the door latch system, including the latch and its activation device, in the direction parallel to the vehicle's vertical axis with the locking device disengaged and

when demonstrated in accordance with S5.1.1.4.

(c) Each component or subassembly can be calculated for its minimum inertia load resistance in a particular direction. The combined resistance to the unlatching operation must assure that the door latch system, when properly assembled in the vehicle door, will remain latched when subjected to an inertia load of 30 g in the vehicle directions specified in paragraph (a) or (b) of this section, as applicable, when demonstrated in accordance with S5.1.1.4(a).

S4.1.2 *Door Hinges.*

S4.1.2.1 When tested in accordance with S5.1.2, each door hinge system shall

(a) Support the door,

(b) Not separate when a longitudinal load of 11,000 N is applied,

(c) Not separate when a transverse load of 9,000 N is applied, and

(d) Not separate when a vertical load of 9,000 N is applied.

S4.1.2.2 If a single hinge within the hinge system is tested instead of the entire hinge system, the hinge must bear a load proportional to the total number of hinges in the hinge system.

S4.1.2.3 On side doors with rear mounted hinges that can be operated independently of other doors, (a) The interior door handle shall be inoperative when the speed of the vehicle is greater than or equal to 4 km/h, and

(b) A door closure warning system shall be provided for those doors.

S4.2 *Sliding Side Doors.*

S4.2.1 *Latch System.* Each sliding door system shall be equipped with either:

(a) At least one primary door latch system, or

(b) A door latch system with a fully latched position and a door closure warning system.

S4.2.1.1 *Load Test One.*

(a) At least one door latch system, when in the fully latched position, shall not separate when a load of 11,000 N is applied in the direction perpendicular to the face of the latch such when tested in accordance with S5.2.1.1.

(b) In the case of a primary door latch system, when in the secondary latched position, the door latch system shall not separate when a load of 4,500 N is applied in the same direction when tested in accordance with S5.2.1.1.

S4.2.1.2 *Load Test Two.*

(a) At least one door latch system, when in the fully latched position, shall not separate when a load of 9,000 N is applied in the fork-bolt opening direction and parallel to the face of the latch when tested in accordance with S5.2.1.2.

(b) In the case of a primary door latch system, when in the secondary latched position, the door latch system shall not separate when a load of 4,500 N is applied in the same direction when tested in accordance with S5.2.1.2.

S4.2.1.3 *Inertial Load.* Each door latch system certified as meeting the requirements of S4.2.1.1 and S4.2.1.2 shall meet either the dynamic requirements specified in paragraph (a) of this section or the calculation of inertial load resistance specified in paragraph (b) of this section.

(a) The door latch system shall not disengage from the fully latched position when an inertial load of 30g is applied to the door latch system, including the latch and its activation mechanism, in the directions parallel to the vehicle's longitudinal and transversal axes with the locking mechanism disengaged and when tested in accordance with 5.2.1.4.

(b) The minimum inertial load resistance can be calculated for each component or subassembly. Their combined resistance to the unlatching operation must assure that the door latch system, when properly assembled in the vehicle door, will remain latched when subjected to an inertia load of 30 g in the vehicle directions specified in S4.2.1.1 or S4.2.1.2, as applicable, in accordance with S5.1.1.4.

S4.2.2 *Door System.*

S4.2.2.1 The track and slide combination or other supporting means for each sliding door, while in the closed fully latched position, shall not separate from the door frame when a total force of 18,000 N along the vehicle transverse axis is applied to the door in accordance with S5.2.2.

S4.2.2.2 The sliding door, when tested in accordance with S5.2.2, fails the requirement of S4.2.2.1 if any one of the following occurs:

(a) A separation between the interior of the door and the exterior edge of the doorframe exceeds 100 mm, while the required force is maintained.

(b) Either force application device reaches a total displacement of 300 mm.

S4.3 *Door Locks.* Each door shall be equipped with at least one locking device which, when engaged, shall prevent operation of the exterior door handle or other exterior latch release control and which has an operating means and a lock release/engagement device located within the interior of the vehicle.

S4.3.1 *Rear side doors.*

Each rear side door shall be equipped with at least one locking device which has a lock release/engagement mechanism located within the interior of the vehicle and readily accessible to the driver of the vehicle or an occupant seated adjacent to the door, and which, when engaged, prevents operation of the interior door handle or other interior latch release control and requires separate actions to unlock the door and operate the interior door handle or other interior latch release control.

S4.3.2 *Back doors.*

Each back door equipped with an interior door handle or other interior latch release control, shall be equipped with at least one locking device that meets the requirements of S4.3.1.

S5 *Test Procedures.*

S5.1 *Hinged Doors.*

S5.1.1 *Primary Door Latches.*

S5.1.1.1 *Load Test One Force Application.* Compliance with S4.1.1.1 and S4.2.1 is demonstrated in accordance with the following:

(a) *Fully Latched Position.*

(1) Adapt the test fixture shown in Figure 1 to the mounting provisions of the latch and striker. Align the direction of engagement parallel to the linkage of the fixture. Mount the latch and striker in the fully latched position to the test fixture.

(2) Locate weights to apply a 900 N load tending to separate the latch and striker in the direction of the door opening.

(3) Apply the test load, in the direction specified in S4.1.1.1 and Figure 4, at a rate not to exceed 5 mm/min until the required load has been achieved. Record the maximum load achieved.

(b) *Secondary Latched Position.*

(1) Adapt the test fixture shown in Figure 1 to the mounting provisions of the latch and striker. Align the direction of engagement parallel to the linkage of the fixture. Mount the latch and striker in the secondary latched position to the test fixture.

(2) Locate weights to apply a 900 N load tending to separate the latch and striker in the direction of the door opening.

(3) Apply the test load, in the direction specified in S4.1.1.1 and Figure 4, at a rate not to exceed 5 mm/min until the required load has been achieved. Record maximum load achieved.

(4) The test plate on which the door latch is mounted will have a striker cut-out configuration similar to the environment in which the door latch will be mounted on normal vehicle doors.

S5.1.1.2 *Load Test Two Force Application.* Compliance with S4.1.1.2 and S4.2.2 is demonstrated in accordance with the following:

(a) *Fully Latched Position.*

(1) Adapt the test fixture shown in Figure 2 to the mounting provisions of

the latch and striker. Mount the latch and striker in the fully latched position to the test fixture.

(2) Apply the test load, in the direction specified in S4.1.1.2 and Figure 4, at a rate not to exceed 5 mm/min until the required load has been achieved. Record the maximum load achieved.

(b) *Secondary Latched Position.*

(1) Adapt the test fixture shown in Figure 2 to the mounting provisions of the latch and striker. Mount the latch and striker in secondary latched position to the test fixture.

(2) Apply the test load, in the direction specified in S4.1.1.2 and Figure 4, at a rate not to exceed 5 mm/min until the required load has been achieved. Record the maximum load achieved.

S5.1.1.3 *Load Test Three Force Application.* Compliance with S4.1.1.3 is demonstrated in accordance with the following:

(a) Adapt the test fixture shown in Figure 3 to the mounting provisions of the latch and striker. Mount the latch and striker in fully latched position to the test fixture.

(b) Apply the test load, in the directions specified in S4.1.1.3 and Figure 4, at a rate not to exceed 5 mm/min until the required load has been achieved. Record the maximum load required.

S5.1.1.4 *Inertia Force Application.* Compliance with S4.1.1.4 and S4.2.3 is demonstrated in accordance with either paragraph (a) or (b) of this section.

(a) *Calculation.* Compliance shall be demonstrated in accordance with paragraph 6 of Society of Automotive Engineers Recommended Practice J839, *Passenger Car Side Door Latch Systems,* June 1991.

(b) *Dynamic Test.*

(1) *Test Setup and Directions for Full Vehicle Test.*

(i) Test Setup.

(A) Rigidly secure the full vehicle to an acceleration device that, when accelerated together, will assure that all points on the crash pulse curve are within the corridor defined in Table 1 and Figure 5.

(B) Install the equipment used to record door opening (doors may be tethered to avoid damaging the recording equipment).

(C) Close the door(s) to be tested and ensure that the door latch(es) is in the fully-latched position, that the door(s) is unlocked, and that all windows, if provided, on the door(s) are closed.

(ii) Test Directions. (*See* Figure 6).

(A) Longitudinal Setup 1. Orient the vehicle so that its longitudinal axis is aligned with the axis of the acceleration device, simulating a frontal impact.

(B) Longitudinal Setup 2. Orient the vehicle so that its longitudinal axis is aligned with the axis of the acceleration device, simulating a rear impact.

(C) Transverse Setup 1. Orient the vehicle so that its transverse axis is aligned with the axis of the acceleration device, simulating a driver-side impact.

(D) Transverse Setup 2. (Only for vehicles having different door arrangements on each side.) Orient the vehicle so that its transverse axis is aligned with the axis of the acceleration device, simulating a side impact in the direction opposite to that described in paragraph (*C*).

(2) *Test Setup and Directions for Door Test.*

(i) Test Setup.

(A) Mount the door assemblies, consisting of at least the door latch(es), exterior door handle(s) with mechanical latch operation, interior door opening lever(s), and locking device(s), either separately or combined to a test fixture. Each door and striker shall be mounted to the test fixture to correspond to its orientation on the vehicle and to the directions specified in paragraph (b)(1)(ii) of this section.

(B) Mount the test fixture to the acceleration device, and install the equipment used to record door opening.

(C) Ensure that the door latch is in the fully-latched position, that the door is tethered and unlocked, and that any windows are closed.

(ii) Test Directions. (*See* Figure 6)

(A) Longitudinal Setup 1. Orient the door subsystem(s) on the acceleration device in the direction of a frontal impact.

(B) Longitudinal Setup 2. Orient the door subsystem(s) on the acceleration device in the direction of a rear impact.

(C) Transverse Setup 1. Orient the door subsystem(s) on the acceleration device in the direction of a driver-side impact.

(D) Transverse Setup 2. Orient the door subsystem(s) on the acceleration device in the direction opposite to that described in paragraph (C).

(E) Vertical Setup 1 (back doors only). Orient the door subsystem(s) on the acceleration device so that its vertical axis (when mounted in the vehicle) is aligned with the axis of the acceleration device, simulating a rollover impact where the force is applied in the direction from the top to the bottom of the door (when mounted in a vehicle).

(F) Vertical Setup 2 (back doors only). Orient the door subsystem(s) on the acceleration device so that its vertical axis (when mounted in the vehicle) is aligned with the axis of the acceleration device, simulating a rollover impact where the force is applied in the direction opposite to that described in paragraph (b)(2)(ii)(E) of this section.

(3) *Test Operation.*

(i) Maintaining a minimum acceleration level of 30 g for a period of at least 30 ms, while keeping the acceleration within the pulse corridor defined in Table 1 and Figure 5, accelerate the acceleration device in the following directions:

(A) For Full Vehicle Tests, in the directions specified in S5.1.1.4(b)(1)(ii)(A) through S5.1.1.4(b)(1)(ii)(D).

(B) For Door Tests,in the directions specified in S5.1.1.4(b)(2)(ii)(A) through S5.1.1.4(b)(2)(ii)(F).

(ii) Check recording device for door opening and/or closure during the test.

(iii) If at any point in time, the pulse exceeds 36 g and the test requirements are fulfilled, the test shall be considered valid.

S5.1.2 *Door Hinges.* Compliance with S4.1.2 is demonstrated in accordance with the following:

S5.1.2.1 *Multiple Hinge Evaluation.*

S5.1.2.1.1 *Longitudinal Load Test.*

(a) Attach the hinge system to the mounting provision of the test fixture illustrated in Figure 7. Hinge attitude must simulate vehicle position (door fully closed) relative to the hinge centerline. For test purposes, the distance between the extreme ends of one hinge in the system to the extreme end of another hinge in the system is to be set at 406 mm ± 4 mm. The load is to be applied equidistant between the linear center of the engaged portions of the hinge pin and through the centerline of the hinge pin in the longitudinal vehicle direction (*see* figure 8).

(b) Apply the test load at a rate not to exceed 5 mm/min until the required load has been achieved. Record maximum load achieved.

S5.1.2.1.2 *Transverse Load Test.*

(a) Attach the hinge system to the mounting provisions of the test fixture illustrated in figure 7. Hinge attitude must simulate vehicle position (door fully closed) relative to the hinge centerline. For test purposes, the distance between the extreme ends of one hinge in the system to the extreme opposite end of another hinge in the system is to be set at 406 mm ± 4mm. The load is to be applied equidistant between the linear center of the engaged portions of the hinge pins and through the centerline of the hinge pin in the transverse vehicle direction (*see* figure 8).

(b) Apply the test load at a rate not to exceed 5 mm/min until the required load has been achieved. Record maximum load achieved.

S5.1.2.2 *Vertical Load Test* (back doors only).

(a) Attach the hinge system to the mounting provisions of the test fixture illustrated in figure 7. Hinge attitude must simulate vehicle position (door fully closed) relative to the hinge centerline. For test purposes, the distance between the extreme ends of one hinge system in the system to the extreme opposite end of another hinge system is to be set at 406 mm ± 4 mm. The load is to be applied through the centerline of the hinge pin in a direction orthogonal to the longitudinal and transverse loads (*see* figure 8).

(b) Apply the test load at a rate not to exceed 5 mm/min until the required load has been achieved. Failure consists of a separation of either hinge. Record the maximum load achieved.

S5.1.2.3 *Single Hinge Evaluation.* In some circumstances, it may be necessary to test the individual hinges of a hinge system. In such cases, the results for an individual hinge, when tested in accordance with the procedures below, shall be such as to indicate that system requirements in S4.1.2 are met. (For example, an individual hinge in a two-hinge system must be capable of withstanding 50 percent of the load requirements of the total system.)

(a) *Longitudinal Load.* Attach the hinge system to the mounting provision of the test fixture illustrated in figure 7. Hinge attitude must simulate the vehicle position (door fully closed) relative to the hinge centerline. For test purposes, the load is to be applied equidistant between the linear center of the engaged portions of the hinge pin and through the centerline of the hinge pin in the longitudinal vehicle direction. Apply the test load at a rate not to exceed 5 mm/min until the required load has been achieved. Failure consists of a separation of either hinge. Record maximum load achieved.

(b) *Transverse Load.* Attach the hinge system to the mounting provision of the test fixture illustrated in figure 7. Hinge attitude must simulate the vehicle position (door fully closed) relative to the hinge centerline. For test purposes, the load is to be applied equidistant between the linear center of the engaged portions of the hinge pin and through the centerline of the hinge pin in the transverse vehicle direction. Apply the test load at a rate not to exceed 5 mm/min until the required load has been achieved. Failure consists of a separation of either hinge. Record maximum load achieved.

(c) *Vertical Load.* Attach the hinge system to the mounting provision of the test fixture illustrated in figure 7. Hinge attitude must simulate the vehicle position (door fully closed) relative to the hinge centerline. For test purposes, the load is to be applied centerline of the hinge pin in a direction orthogonal to the longitudinal and transverse loads. Apply the test load at a rate not to exceed 5 mm/min until the required load has been achieved. Failure consists of a separation of either hinge. Record maximum load achieved.

S5.1.2.4 For piano-type hinges, the hinge spacing requirements are not applicable and arrangement of the test fixture is altered so that the test forces are applied to the complete hinge.

S5.2 *Sliding Side Doors.*

S5.2.1 *Door Latches.*

S5.2.1.1 *Load Test One Force Application.* Compliance with S4.2.1.1 is demonstrated in accordance with the test procedures specified in S5.1.1.1.

S5.2.1.2 *Load Test Two Force Application.* Compliance with S4.2.1.2 is demonstrated in accordance with the test procedures specified in S5.1.1.2.

S5.2.1.3 [Reserved]

S5.2.1.4 *Inertial Force Application.* Compliance with 4.2.1.3 is demonstrated in accordance with the test procedures specified in S5.1.1.4.

S5.2.2 *Door System.* Compliance with S4.2.2 is demonstrated in accordance with the following:

S5.2.2.1 Tests are conducted using a full vehicle with the sliding door and its retention components.

S5.2.2.2. The test is conducted using two force application devices capable of applying the outward transverse forces specified in S5.2.2.4. The test setup is shown in figure 9. The force application system shall include the following:

(a) Two force application plates.

(b) Two force application devices capable of applying the outward transverse load requirements for a minimum displacement of 300 mm.

(c) Two load cells of sufficient capacity to measure the applied loads specified in S5.2.2.4.

(d) Two linear displacement measurement devices required for measuring force application device displacement during the test.

(e) Equipment for measuring at least 100 mm of separation between the interior of the door and the exterior edge of the doorframe, while respecting all relevant safety and health requirements.

S5.2.2.3 *Test Setup.*

(a) Remove all interior trim and decorative components from the sliding door assembly.

(b) Remove seats and any interior components that may interfere with the mounting and operation of the test equipment.

(c) Mount the force application devices and associated support structure to the floor of the test vehicle.

(d) Determine the forward and aft edge of the sliding door, or its adjoining vehicle structure, that contains a latch/striker.

(e) Close the sliding door, ensuring that all door retention components are fully engaged.

(f) For any tested door edge that contains one latch/striker, the following set-up procedures are used:

(1) The force application plate is 150 mm in length, 50 mm in width, and at least 15 mm in thickness.

(2) Place the force application device and force application plate against the door so that the applied force is perpendicular to the vertical longitudinal plane that passes through the vehicle's longitudinal centerline, and vertically centered on the door-mounted portion of the latch/striker.

(3) The force application plate is positioned as close to the edge of the door as possible. It is not necessary for the force application plate to be vertical.

(g) For any tested door edge that contains more than one latch/striker, the following setup procedures are used:

(1) The force application plate is 300 mm in length, 50 mm in width, and at least 15 mm in thickness.

(2) Place the force application device and force application plate against the door so that the applied force is perpendicular to the vertical longitudinal plane that passes through the vehicle's longitudinal centerline, and vertically centered on a point mid-way between the outermost edges of the latch/striker assemblies.

(3) The force application plate is positioned as close to the edge of the door as possible. It is not necessary for the force application plate to be vertical.

(h) For any tested door edge that does not contain at least one latch/striker, the following set-up procedures are used:

(1) The force application plate is 300 mm in length, 50 mm in width, and at least 15 mm in thickness.

(2) Place the force application device and force application plate against the door so that the applied force is perpendicular to the vertical longitudinal plane that passes through horizontal the vehicle's longitudinal centerline, and vertically centered on a point mid-way along the length of the door edge ensuring that the loading device avoids contact with the window glazing.

(3) The force application plate is positioned as close to the edge of the door as possible. It is not necessary for the force application plate to be vertical.

(i) The door is unlocked. No extra fixtures or components may be welded or affixed to the sliding door or any of its components.

(j) Attach any equipment used for measuring door separation that will be used to determine separation levels during the test procedure.

(k) Place the load application structure so that the force application plates are in contact with the interior of the sliding door.

S5.2.2.4 *Test Procedure.*

(a) Move each force application device at a rate of 20–90 mm per minute until a force of 9,000 N is achieved on each force application device or until either force application device reaches a total displacement of 300 mm.

(b) If one of the force application devices reaches the target force of 9,000 N prior to the other, maintain the 9,000 N force with that force application device until the second force application device reaches the 9,000 N force.

(c) Once both force application devices have achieved 9,000 N each, stop forward movement of the force application devices and hold the resulting load for a minimum of 10 seconds.

(d) Maintain the force application device position of paragraph (c) and measure the separation between the exterior edge of the doorframe and the interior of the door along the perimeter of the door.

S5.3 [Reserved]

BILLING CODE 4910–59–P

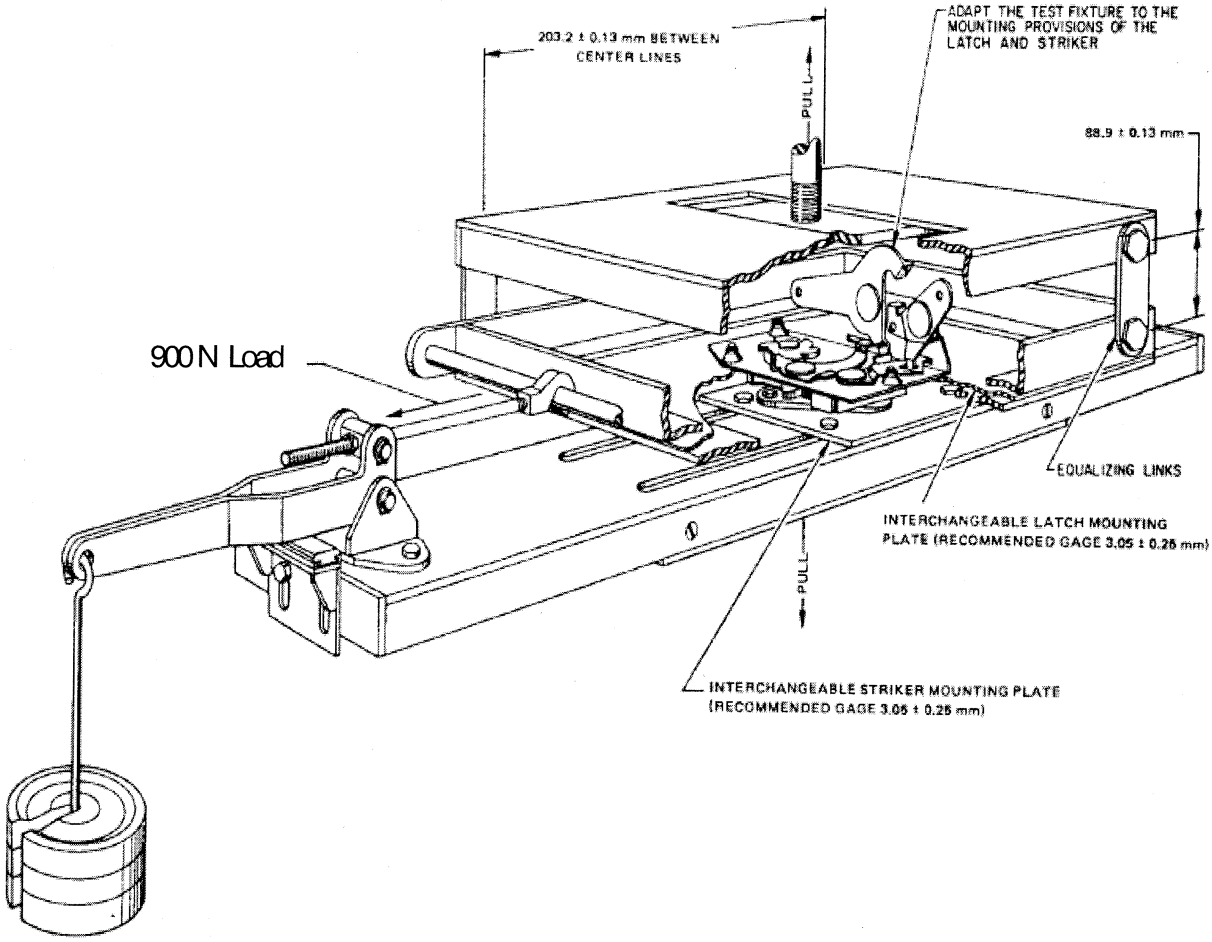

Figure1 – Door Latch - Tensile Testing Fixture for Load Test 1

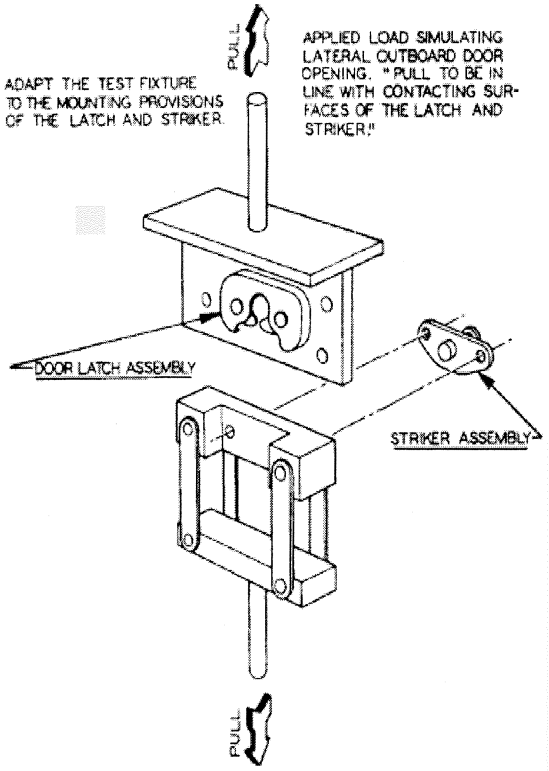

Figure 2 – Door Latch – Tensile Testing Fixture for Load Test 2

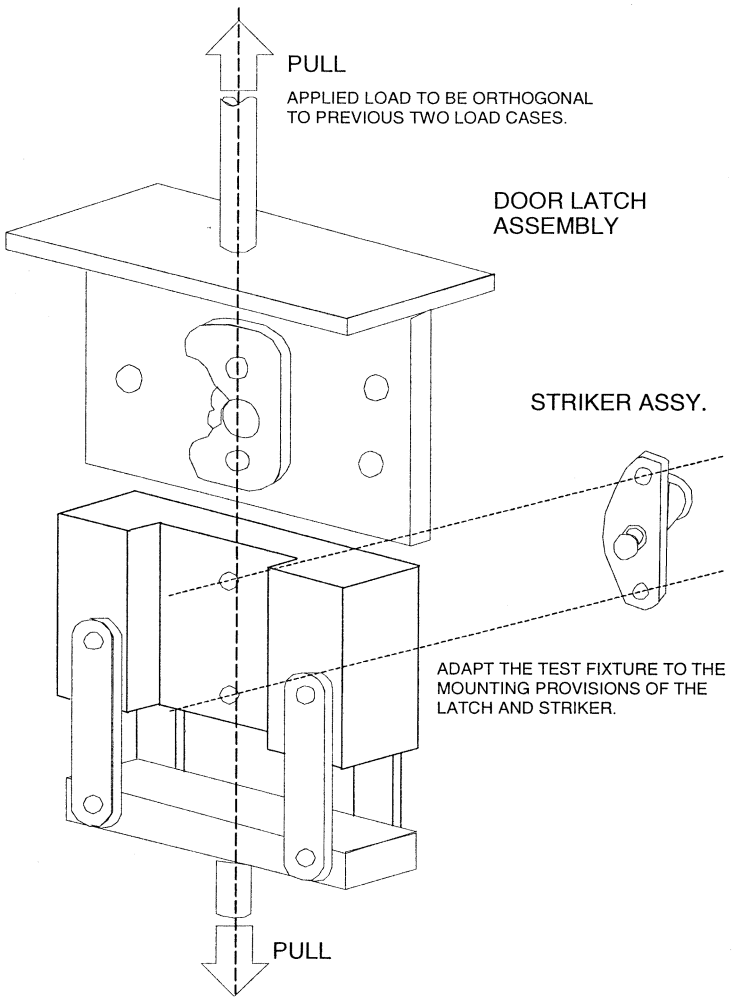

Figure 3 - Door Latch – Tensile Testing Fixture for Load Test 3 (Back Doors Only)

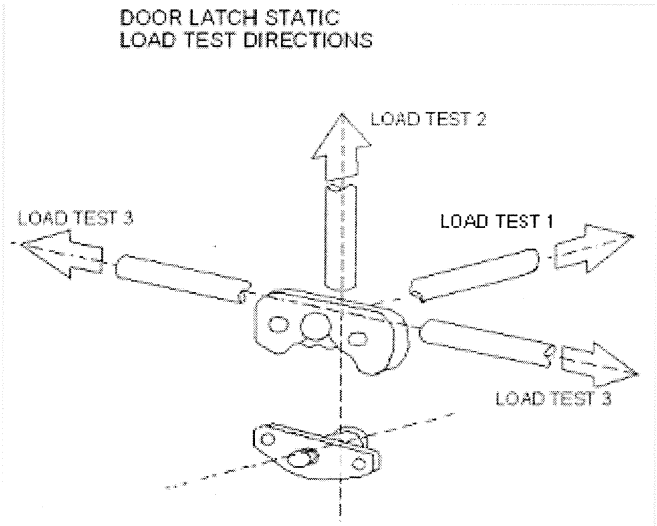

Figure 4 – Door Static Load Test Directions

Upper Bound			Lower Bound		
Point	Time (ms)	Acceleration (g)	Point	Time (ms)	Acceleration (g)
A	0	6	E	5	0
B	20	36	F	25	30
C	60	36	G	55	30
D	100	0	H	70	0

Acceleration Pulse Corridor
Table 1

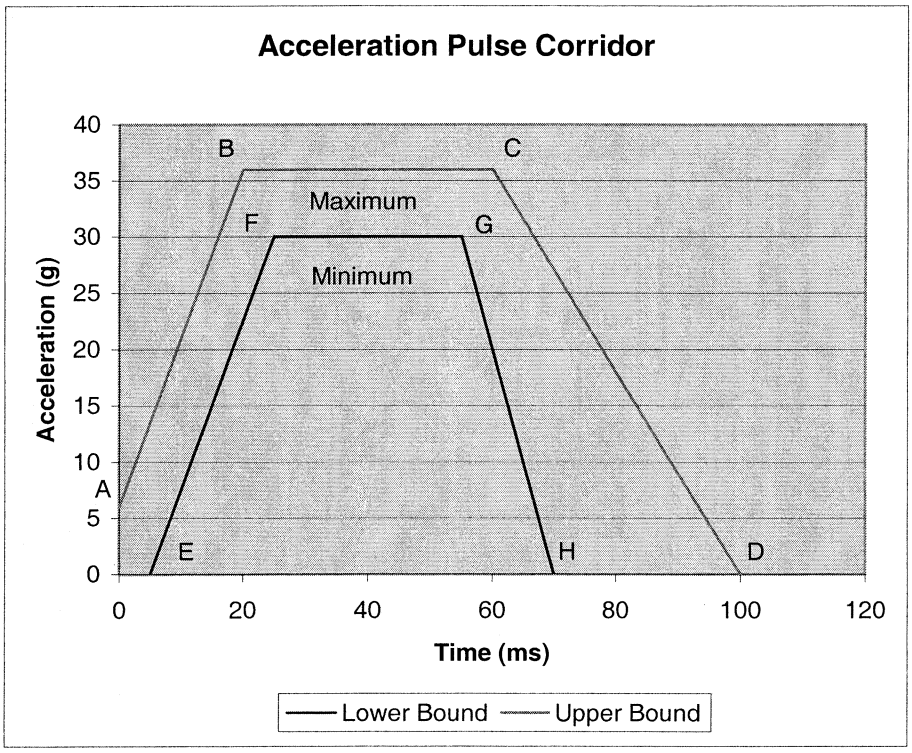

Figure 5 – Acceleration Pulse

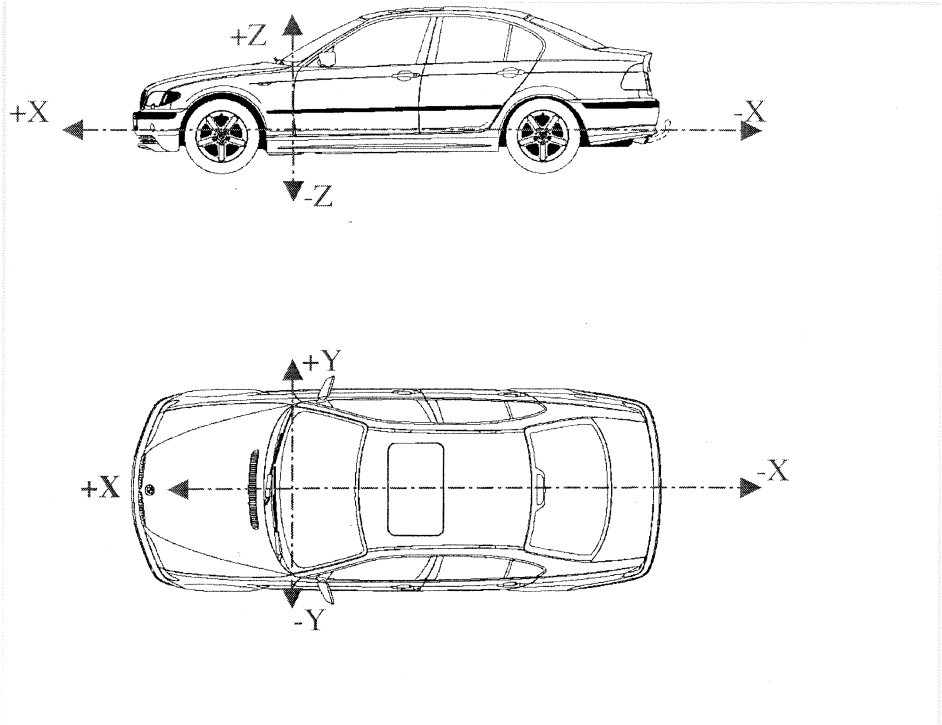

X = longitudinal direction
Y = transversal direction
Z = vertical direction

Figure 6 - Vehicle Coordinate Reference System for Inertial Testing

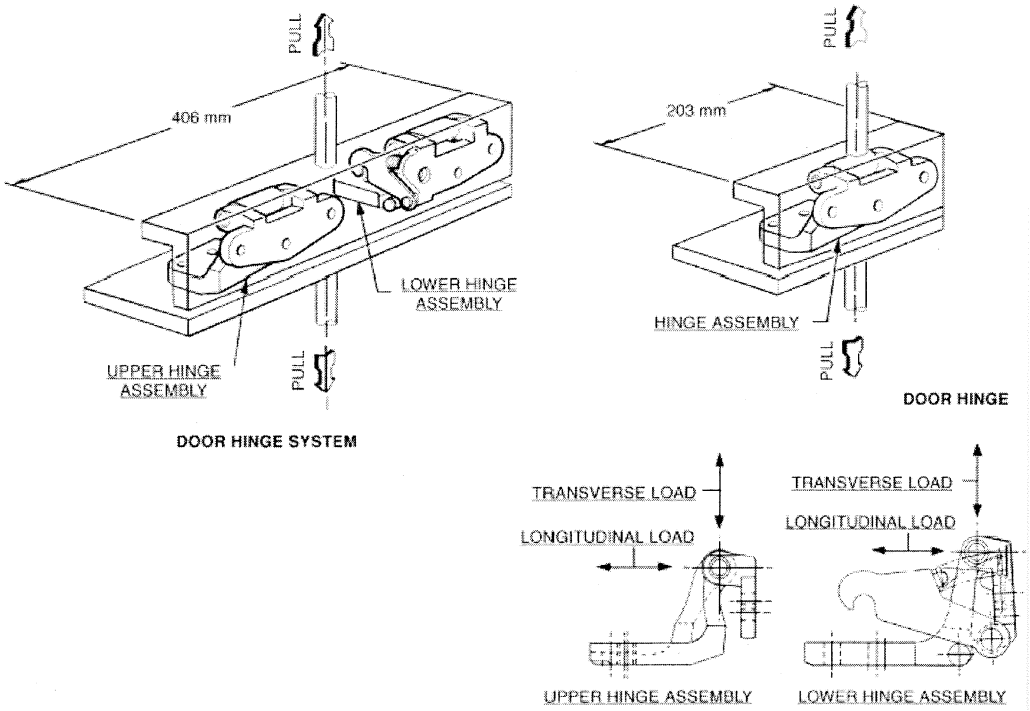

Figure 7 – Static test fixtures for back doors

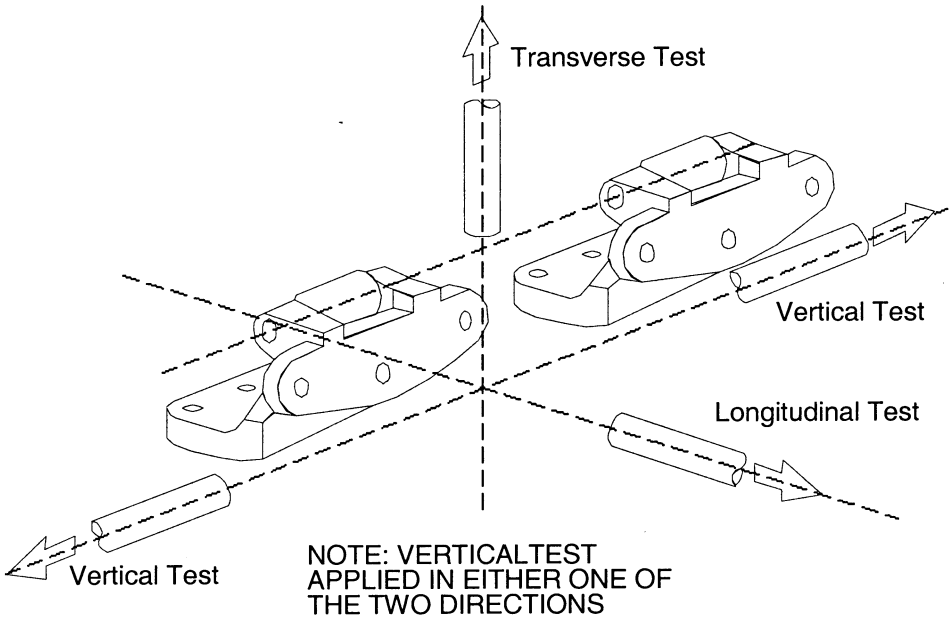

Figure 8 – Static load test directions for back doors

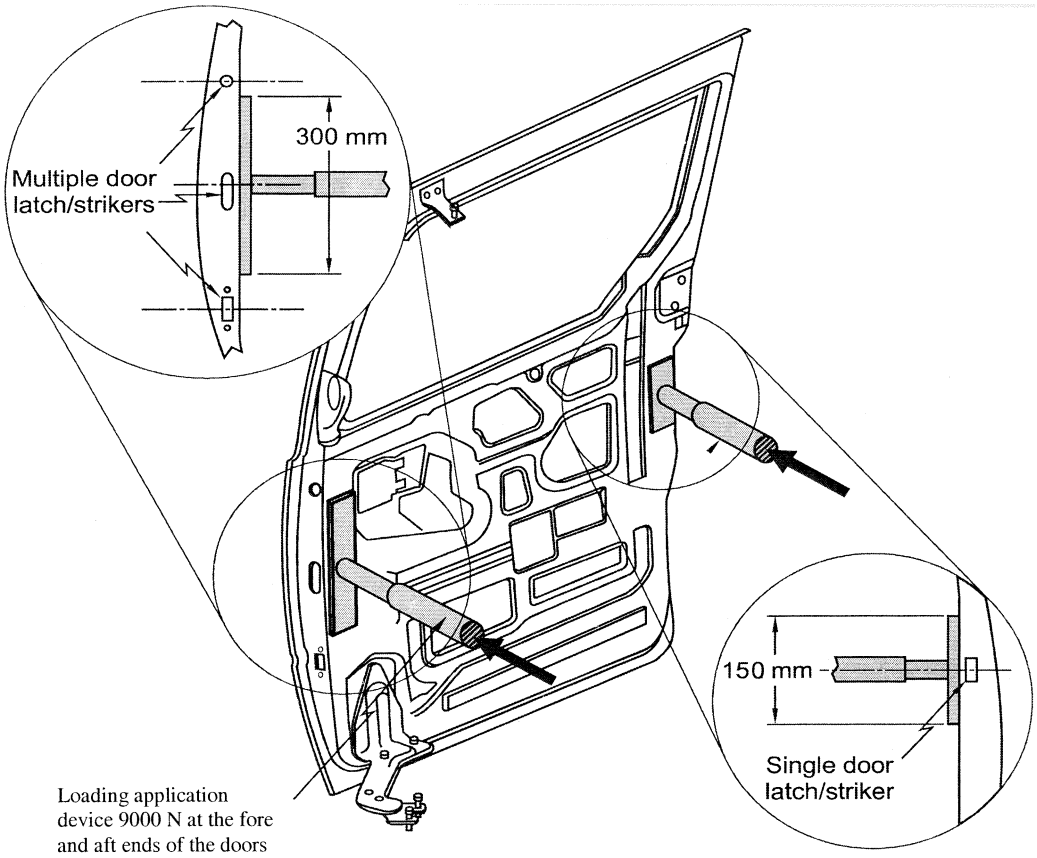

Figure 9 – Sliding Side Door Full Vehicle Test Procedure
(Note: Sliding door is shown separated from the vehicle)

Issued on: December 7, 2004.

Stephen R. Kratzke,

Associate Administrator for Rulemaking.

[FR Doc. 04–27215 Filed 12–14–04; 8:45 am]

BILLING CODE 4910–59–C