Federal Register

9–15–04 Wednesday
Vol. 69 No. 178 Sept. 15, 2004

Pages 55499–55718

The **FEDERAL REGISTER** (ISSN 0097–6326) is published daily, Monday through Friday, except official holidays, by the Office of the Federal Register, National Archives and Records Administration, Washington, DC 20408, under the Federal Register Act (44 U.S.C. Ch. 15) and the regulations of the Administrative Committee of the Federal Register (1 CFR Ch. I). The Superintendent of Documents, U.S. Government Printing Office, Washington, DC 20402 is the exclusive distributor of the official edition. Periodicals postage is paid at Washington, DC.

The **FEDERAL REGISTER** provides a uniform system for making available to the public regulations and legal notices issued by Federal agencies. These include Presidential proclamations and Executive Orders, Federal agency documents having general applicability and legal effect, documents required to be published by act of Congress, and other Federal agency documents of public interest.

Documents are on file for public inspection in the Office of the Federal Register the day before they are published, unless the issuing agency requests earlier filing. For a list of documents currently on file for public inspection, see *www.archives.gov.*

The seal of the National Archives and Records Administration authenticates the Federal Register as the official serial publication established under the Federal Register Act. Under 44 U.S.C. 1507, the contents of the **Federal Register** shall be judicially noticed.

The **Federal Register** is published in paper and on 24x microfiche. It is also available online at no charge as one of the databases on GPO Access, a service of the U.S. Government Printing Office.

The online edition of the **Federal Register** *www.gpoaccess.gov/nara,* available through GPO Access, is issued under the authority of the Administrative Committee of the Federal Register as the official legal equivalent of the paper and microfiche editions (44 U.S.C. 4101 and 1 CFR 5.10). It is updated by 6 a.m. each day the **Federal Register** is published and includes both text and graphics from Volume 59, Number 1 (January 2, 1994) forward.

For more information about GPO Access, contact the GPO Access User Support Team, call toll free 1-888-293-6498; DC area 202-512-1530; fax at 202-512-1262; or via email at *gpoaccess@gpo.gov.* The Support Team is available between 7:00 a.m. and 9:00 p.m. Eastern Time, Monday–Friday, except official holidays.

The annual subscription price for the **Federal Register** paper edition is $749 plus postage, or $808, plus postage, for a combined **Federal Register, Federal Register** Index and List of CFR Sections Affected (LSA) subscription; the microfiche edition of the **Federal Register** including the **Federal Register** Index and LSA is $165, plus postage. Six month subscriptions are available for one-half the annual rate. The prevailing postal rates will be applied to orders according to the delivery method requested. The price of a single copy of the daily **Federal Register,** including postage, is based on the number of pages: $11 for an issue containing less than 200 pages; $22 for an issue containing 200 to 400 pages; and $33 for an issue containing more than 400 pages. Single issues of the microfiche edition may be purchased for $3 per copy, including postage. Remit check or money order, made payable to the Superintendent of Documents, or charge to your GPO Deposit Account, VISA, MasterCard, American Express, or Discover. Mail to: New Orders, Superintendent of Documents, P.O. Box 371954, Pittsburgh, PA 15250-7954; or call toll free 1-866-512-1800, DC area 202-512-1800; or go to the U.S. Government Online Bookstore site, see *bookstore.gpo.gov.*

There are no restrictions on the republication of material appearing in the **Federal Register.**

How To Cite This Publication: Use the volume number and the page number. Example: 69 FR 12345.

Postmaster: Send address changes to the Superintendent of Documents, Federal Register, U.S. Government Printing Office, Washington DC 20402, along with the entire mailing label from the last issue received.

SUBSCRIPTIONS AND COPIES

PUBLIC

Subscriptions:

Paper or fiche	**202–512–1800**
Assistance with public subscriptions	**202–512–1806**

General online information **202–512–1530; 1–888–293–6498**

Single copies/back copies:

Paper or fiche	**202–512–1800**
Assistance with public single copies	**1–866–512–1800 (Toll-Free)**

FEDERAL AGENCIES

Subscriptions:

Paper or fiche	**202–741–6005**
Assistance with Federal agency subscriptions	**202–741–6005**

What's NEW!

Federal Register Table of Contents via e-mail

Subscribe to FEDREGTOC, to receive the **Federal Register** Table of Contents in your e-mail every day.

If you get the HTML version, you can click directly to any document in the issue.

To subscribe, go to **http://listserv.access.gpo.gov** and select:

Online mailing list archives
FEDREGTOC-L
Join or leave the list

Then follow the instructions.

What's NEW!

Regulations.gov, the award-winning Federal eRulemaking Portal

Regulations.gov is the one-stop U.S. Government web site that makes it easy to participate in the regulatory process.

Try this fast and reliable resource to find all rules published in the *Federal Register* that are currently open for public comment. Submit comments to agencies by filling out a simple web form, or use available email addresses and web sites.

The Regulations.gov e-democracy initiative is brought to you by NARA, GPO, EPA and their eRulemaking partners.

Visit the web site at: **http://www.regulations.gov**

Printed on recycled paper.

Contents

Federal Register

Vol. 69, No. 178

Wednesday, September 15, 2004

Agency for International Development
NOTICES
Agency information collection activities; proposals, submissions, and approvals, 55572

Arts and Humanities, National Foundation
See National Foundation on the Arts and the Humanities

Centers for Medicare & Medicaid Services
See Inspector General Office, Health and Human Services Department

Chemical Safety and Hazard Investigation Board
RULES
Federal Tort Claims Act; administrative claims, 55512–55515

Children and Families Administration
NOTICES
Agency information collection activities; proposals, submissions, and approvals, 55636–55637

Coast Guard
RULES
Ports and waterways safety:
San Francisco Bay, CA
Security zones, 55502–55505

Commerce Department
See International Trade Administration
See National Institute of Standards and Technology
See Patent and Trademark Office
NOTICES
Agency information collection activities; proposals, submissions, and approvals, 55572–55573

Defense Department
NOTICES
Agency information collection activities; proposals, submissions, and approvals, 55586–55587
Arms sales notification, transmittal letter, etc., 55587–55600
Committees; establishment, renewal, termination, etc.:
Defense Intelligence Agency Advisory Board, 55600
Courts-Martial Manual; amendments, 55600–55604
Meetings:
Science Board task forces, 55604
Privacy Act:
Systems of records
Marine Corps, 55604–55605

Employment Standards Administration
NOTICES
Agency information collection activities; proposals, submissions, and approvals, 55653–55654

Energy Department
See Federal Energy Regulatory Commission
NOTICES
Meetings:
National Petroleum Council, 55629

Environmental Protection Agency
RULES
Pesticides; tolerances in food, animal feeds, and raw agricultural commodities:
Thiamethoxam, 55506–55512
PROPOSED RULES
Water programs:
Pollutants analysis test procedures; guidelines—
Detection and quantitation procedures; stakeholder process, 55547
NOTICES
Grants and cooperative agreements; availability, etc.:
Environmental Education Program, 55610–55622
Meetings:
National Pollution Prevention and Toxics Advisory Committee, 55622–55623
Pesticide, food, and feed additive petitions:
Nippon Soda Co., 55625–55629
Syngenta Seeds, 55605–55608
Pesticide registration, cancellation, etc.:
Creosote wood preservative and other creosote products, 55623–55625

Executive Office of the President
See Presidential Documents

Federal Aviation Administration
RULES
Class E airspace
Correction, 55499
NOTICES
Passenger facility charges; applications, etc.:
Tri-Cities Airport, WA, 55658

Federal Communications Commission
RULES
Common carrier services:
Public mobile and personal communications services—
Cellular carriers analog service requirement and electronic serial numbers use in cellular telephones; removal decisions affirmed; correction, 55516–55517
Satellite communications—
Space station licensing rules and policies, 55516
Radio stations; table of assignments:
Michigan, 55517
PROPOSED RULES
Radio stations; table of assignments:
Various states, 55547–55548
NOTICES
Agency information collection activities; proposals, submissions, and approvals, 55630
Practice and procedure:
Elimination of market barriers for small telecommunications businesses and allocations of spectrum-based services for small and minority-owned businesses, 55630–55631

Federal Emergency Management Agency
NOTICES
Meetings:
Mitigation of Severe Repetitive Loss Properties Pilot Program, 55642–55643

Federal Energy Regulatory Commission
NOTICES
Meetings:
American Wind Energy Association; interconnection of large wind generators; technical conference, 55609–55610
Applications, hearings, determinations, etc.:
Vista del Sol LNG Terminal, L.P., 55609

Federal Highway Administration
NOTICES
Environmental statements; availability, etc.:
Arlington County, VA and District of Columbia, 55658–55659

Federal Maritime Commission
NOTICES
Agreements filed, etc., 55631

Federal Railroad Administration
NOTICES
Exemption petitions, etc.
Wabtec Corp., 55659

Federal Reserve System
NOTICES
Banks and bank holding companies:
Formations, acquisitions, and mergers, 55631–55632
Permissible nonbanking activities, 55632

Federal Trade Commission
NOTICES
Meetings:
E-mail authentication standards; summit participation and comments request, 55632–55636

Fish and Wildlife Service
NOTICES
Endangered and threatened species:
Incidental take permits—
Baldwin County, AL; Alabama beach mouse, 55645–55647
Endangered and threatened species permit applications, 55643–55645

Food and Drug Administration
NOTICES
Meetings:
Hemodialysis or peritoneal dialysis solutions; safety and efficacy evaluation, 55637–55638

Health and Human Services Department
See Children and Families Administration
See Food and Drug Administration
See Health Resources and Services Administration
See Inspector General Office, Health and Human Services Department
RULES
Health insurance reform:
Civil money penalties; investigations procedures, penalties imposition, and hearings, 55515–55516
NOTICES
Meetings:
Medicare Trustee Reports Technical Advisory Panel, 55636

Health Resources and Services Administration
NOTICES
Agency information collection activities; proposals, submissions, and approvals, 55638
Withdrawn, 55638–55639
Reports and guidance documents; availability, etc.:
Federal Tort Claims Act coverage of free clinic volunteer health care professionals; withdrawn, 55639

Homeland Security Department
See Coast Guard
See Federal Emergency Management Agency

Indian Affairs Bureau
NOTICES
Land acquisitions into trust:
Picayune Rancheria of California, 55647

Inspector General Office, Health and Human Services Department
NOTICES
Program exclusions; list, 55639–55642

Interior Department
See Fish and Wildlife Service
See Indian Affairs Bureau
See Land Management Bureau

Internal Revenue Service
RULES
Income taxes:
Duplicate Forms 5472; electronic filing, 55499–55500

International Trade Administration
NOTICES
Antidumping:
Antifriction bearings and parts from—
Various countries, 55574–55581
Heavy forged hand tools, finished or unfinished, with or without handles from—
China, 55581–55585

International Trade Commission
NOTICES
Import investigations:
Polyvinyl alcohol from—
Taiwan, 55653

Labor Department
See Employment Standards Administration
See Occupational Safety and Health Administration

Land Management Bureau
NOTICES
Oil and gas leases:
Wyoming, 55648
Realty actions; sales, leases, etc.:
California, 55648–55649
Nevada, 55649–55651
Recreation management restrictions, etc.:
Butte Field Office-administered recreational lands, MT; fee collection sites; supplementary rules, 55651–55652

National Archives and Records Administration
RULES
Public availability and use:
Records and donated historical materials use; research room procedures
Correction, 55505

National Foundation on the Arts and the Humanities
NOTICES
Agency information collection activities; proposals, submissions, and approvals, 55654–55655
Meetings:
Arts Advisory Panel, 55655

National Highway Traffic Safety Administration
RULES
Motor vehicle safety standards:
Power-operated window, partition, and roof panel systems, 55517–55546
PROPOSED RULES
Anthropomorphic test devices:
Occupant crash protection—
ES-2re side impact crash test dummy; 50th percentile adult male; specifications and qualification requirements, 55550–55571
Motor vehicle safety standards:
Lamps, reflective devices, and associated equipment—
Signal lamps and reflectors; geometric visibility requirements; worldwide harmonization; withdrawn, 55548–55550

National Institute of Standards and Technology
NOTICES
Meetings:
National Construction Safety Team Advisory Committee, 55585–55586
Personal identity verification of Federal employees and contractors; workshop, 55586

Neighborhood Reinvestment Corporation
NOTICES
Meetings; Sunshine Act, 55655

Nuclear Regulatory Commission
NOTICES
Meetings; Sunshine Act, 55656

Occupational Safety and Health Administration
RULES
Shipyard employment safety and health standards:
Fire protection, 55667–55708

Patent and Trademark Office
RULES
Patent cases:
Fee revisions (2005 FY)
Correction, 55505–55506

Pension Benefit Guaranty Corporation
RULES
Single-employer plans:
Allocation of assets—
Interest assumptions for valuing and paying benefits, 55500–55502
NOTICES
Multi-employer plans:
Interest rates and assumptions, 55656–55657

Postal Service
RULES
Postage meters:
Rented postage meters; cautionary label requirements, 55506

Presidential Documents
PROCLAMATIONS
Special observances:
National Alcohol and Drug Addiction Recovery Month (Proc. 7809), 55709–55712
National Days of Prayer and Remembrance (Proc. 7811), 55715
National Ovarian Cancer Awareness Month (Proc. 7810), 55713–55714
Patriot Day (Proc. 7812), 55717

Small Business Administration
NOTICES
Meetings:
Audit and Financial Management Advisory Committee, 55657

Social Security Administration
NOTICES
Senior Executive Service:
Performance Review Board; membership, 55657

Surface Transportation Board
NOTICES
Railroad operation, acquisition, construction, etc.:
CSX Transportation, Inc., 55659–55660

Transportation Department
See Federal Aviation Administration
See Federal Highway Administration
See Federal Railroad Administration
See National Highway Traffic Safety Administration
See Surface Transportation Board
NOTICES
Aviation proceedings:
Agreements filed, etc., 55657
Certificates of public convenience and necessity and foreign air carrier permits; weekly applications, 55657–55658

Treasury Department
See Internal Revenue Service

Veterans Affairs Department
NOTICES
Agency information collection activities; proposals, submissions, and approvals, 55660–55665

Separate Parts In This Issue

Part II
Labor Department, Occupational Safety and Health Administration, 55667–55708

Part III
Executive Office of the President, Presidential Documents, 55709–55715

Reader Aids

Consult the Reader Aids section at the end of this issue for phone numbers, online resources, finding aids, reminders, and notice of recently enacted public laws.

To subscribe to the Federal Register Table of Contents LISTSERV electronic mailing list, go to http://listserv.access.gpo.gov and select Online mailing list archives, FEDREGTOC-L, Join or leave the list (or change settings); then follow the instructions.

CFR PARTS AFFECTED IN THIS ISSUE

A cumulative list of the parts affected this month can be found in the Reader Aids section at the end of this issue.

3 CFR

Proclamations:

7809 55711
7810 55713
7811 55715
7812 55717

14 CFR

71 55499

26 CFR

1 55499

29 CFR

1915 55668
4022 55500
4044 55500

33 CFR

165 55502

36 CFR

1254 55505

37 CFR

1 55505
41 55505

39 CFR

501 55506

40 CFR

180 55506
1620 55512

Proposed Rules:

136 55547

45 CFR

160 55515

47 CFR

1 55516
22 55516
24 55516
25 55516
73 55517

Proposed Rules:

73 55547

49 CFR

571 (2 documents) 55517, 55531

Proposed Rules:

571 55548
572 55550

Rules and Regulations

Federal Register

Vol. 69, No. 178

Wednesday, September 15, 2004

This section of the FEDERAL REGISTER contains regulatory documents having general applicability and legal effect, most of which are keyed to and codified in the Code of Federal Regulations, which is published under 50 titles pursuant to 44 U.S.C. 1510.

The Code of Federal Regulations is sold by the Superintendent of Documents. Prices of new books are listed in the first FEDERAL REGISTER issue of each week.

DEPARTMENT OF TRANSPORTATION

Federal Aviation Administration

14 CFR Part 71

[Docket FAA 2004–18924; Airspace Docket 04–ANM–14]

Correction to Class E Airspace; Kalispell, MT

AGENCY: Federal Aviation Administration [FAA], DOT.

ACTION: Final rule; correction.

SUMMARY: This action corrects an error in the latitude and longitude in the east and west boundary description of the Class E airspace at Kalispell, MT, that was published on April 13, 2004 (69 FR 19317).

DATES: Effective 0901 UTC, October 28, 2004.

FOR FURTHER INFORMATION CONTACT: Ed Haeseker, Air Traffic Division, Federal Aviation Administration, 1601 Lind Avenue SW., Renton, Washington 98055–4056; telephone (425) 227–2527.

SUPPLEMENTARY INFORMATION:

History

Federal Register Document 2003–16214, Airspace Docket 02–ANM–11, published on April 13, 2004 (69 FR 19317), revised Class E Airspace at Glacier Park International Airport, Kalispell, MT, effective August 5, 2004. An error was discovered in the geographic coordinates for the east and west sides of the Class E airspace boundary. This action corrects this error.

List of Subjects in 14 CFR Part 71

Airspace, Incorporation by reference, Navigation (air).

The Proposed Correction

■ In consideration of the foregoing, the Federal Aviation Administration proposes to correct 14 CFR Part 71 as follows:

PART 71—DESIGNATION OF CLASS A, CLASS B, CLASS C, CLASS D, ADN CLASS E AIRSPACE AREAS; AIRWAYS; ROUTES; AND REPORTING POINTS

■ 1. The authority citation for 14 CFR Part 71 continues to read as follows:

Authority: 49 U.S.C. 106(g), 40103, 40113, 40120; E.O. 10854, 24 FR 9565, 3 CFR, 1959–1963 Comp., p. 389.

§ 71.1 [Correction]

■ 2. The incorporation by reference in 14 CFR Part 71.1 of the Federal Aviation Administration Order 7400.9L, Airspace Designations and Reporting Points, dated September 02, 2003, and effective September 16, 2003, is corrected as follows:

Paragraph 6005 Class E Airspace extending upward from 700 feet above the surface.

* * * * *

ANM MT E5 Kalispell, MT [Corrected]

Kalispell/Glacier Park International Airport, MT
(Lat. 48°18′41″ N., long. 114°15′18″ W.)
Smith Lake Non Directional Beacon (NDB)
(Lat. 48°06′30″ N., long. 114°27′40″ W.)

That airspace extending upward from 700 feet above the surface of the earth within a 7 mile radius of Kalispell/Glacier Park International Airport, and within 4.8 miles each side of the 035° and 215° bearings from the Smith Lake NDB extending from the 7 mile radius to 10.5 miles southwest of the NDB; that airspace extending upward from 1,200 feet above the surface of the earth bounded by a line from lat. 47°30′00″ N., long. 112°37′30″ W.; to lat. 47°43′30″ N., long. 112°37′30″ W.; thence along the southern boundary of V536 to lat. 47°55′30″ N., long. 113°30′00″ W.; to lat. 48°30′00″ N., long. 113°30′00″ W.; to lat. 48°30′00″ N., long. 116°03′35″ W.; thence south along the Montana/Idaho state boundary to lat. 47°30′00″ N., long. 115°42′00″ W.; thence to point of origin; excluding Kalispell/Glacier Park International Airport Class D airspace, Class E2 airspace, and that airspace within federal Airways.

* * * * *

Issued in Seattle, Washington, on August 30, 2004.

Raul C. Treviño,

Area Director, Western En Route and Oceanic Operations.

[FR Doc. 04–20800 Filed 9–14–04; 8:45 am]

BILLING CODE 4910–13–M

DEPARTMENT OF THE TREASURY

Internal Revenue Service

26 CFR Part 1

[TD 9161]

RIN 1545–BD03

Electronic Filing of Duplicate Forms 5472

AGENCY: Internal Revenue Service (IRS), Treasury.

ACTION: Final regulation and removal of temporary regulation.

SUMMARY: This document contains a final regulation providing that a Form 5472 that is timely filed electronically is treated as satisfying the requirement timely to file a duplicate Form 5472 with the Internal Revenue Service Center in Philadelphia, Pennsylvania. This action is necessary to clarify how the duplicate filing requirements for Form 5472 apply when a reporting corporation electronically files its income tax return (including any attachments such as Form 5472). This document affects corporations subject to the reporting requirements in sections 6038A and 6038C that file Form 5472 electronically.

DATES: *Effective Date:* This regulation is effective September 15, 2004.

Applicability Date: For the dates of applicability, see §§ 1.6038A–1(n) and 1.6038A–2(h).

FOR FURTHER INFORMATION CONTACT: Edward R. Barret, (202) 622–3880 (not a toll-free number).

SUPPLEMENTARY INFORMATION:

Background

On February 9, 2004, final and temporary regulations (TD 9113) relating to the duplicate filing requirements for Form 5472 were published in the **Federal Register** (69 FR 5931). The temporary regulation addressed how the duplicate filing requirements for Form 5472 apply when a reporting corporation electronically files its income tax return (including any attachments such as Form 5472). On February 9, 2004, a notice of proposed rulemaking and public hearing (REG–167217–03) was also published in the **Federal Register** (69 FR 5940) with respect to the provisions of the temporary regulation. No written or

electronic comments were received in response to the notice of proposed rulemaking. No requests to speak at the public hearing were received, and, accordingly, the hearing was canceled.

Explanation of Provisions

This Treasury decision adopts the language of the proposed regulation without change. The temporary regulation is removed.

Special Analyses

It has been determined that this Treasury decision is not a significant regulatory action as defined in Executive Order 12866. Therefore, a regulatory assessment is not required. It also has been determined that section 553(b) of the Administrative Procedure Act (5 U.S.C. chapter 5) does not apply to this regulation, and because this regulation does not impose a collection of information on small entities, the Regulatory Flexibility Act (5 U.S.C. chapter 6) does not apply. Pursuant to section 7805(f) of the Code, the notice of proposed rulemaking preceding this regulation was submitted to the Chief Counsel for Advocacy of the Small Business Administration for comment on its impact on small businesses.

Drafting Information

The principal author of this regulation is Edward R. Barret, Office of the Associate Chief Counsel (International). However, other personnel from the IRS and Treasury Department participated in its development.

List of Subjects in 26 CFR Part 1

Income taxes, Reporting and recordkeeping requirements.

Adoption of amendments to the Regulations

■ Accordingly, 26 CFR part 1 is amended as follows:

PART 1—INCOME TAXES

■ **Paragraph 1.** The authority citation for part 1 continues to read in part as follows:

Authority: 26 U.S.C. 7805 * * *

■ **Par. 2.** Section 1.6038A–1 is amended by revising paragraph (n)(2) to read as follows:

§ 1.6038A–1 General requirements and definitions.

* * * * *

(n) * * * (1) * * *

(2) *Section 1.6038A–2.* Section 1.6038A–2 (relating to the requirement to file Form 5472) generally applies for taxable years beginning after July 10, 1989. However, § 1.6038A–2 as it applies to reporting corporations whose sole trade or business in the United States is a banking, financing, or similar business as defined in § 1.864–4(c)(5)(i) applies for taxable years beginning after December 10, 1990. The final sentence of § 1.6038A–2(d) applies for taxable years ending on or after January 1, 2003. For taxable years ending prior to January 1, 2003, see § 1.6038A–2(d) in effect prior to January 1, 2003 (see 26 CFR part 1 revised as of April 1, 2002).

* * * * *

■ **Par. 3.** Section 1.6038A–2 is amended by revising paragraph (d) to read as follows:

§ 1.6038A–2 Requirement of return.

* * * * *

(d) *Time and place for filing returns.* A Form 5472 required under this section shall be filed with the reporting corporation's income tax return for the taxable year by the due date (including extensions) of that return. A duplicate Form 5472 (including any attachments and schedules) shall be filed at the same time with the Internal Revenue Service Center, Philadelphia, PA 19255. A Form 5472 that is timely filed electronically satisfies the duplicate filing requirement.

* * * * *

§ 1.6038A–2T [Removed]

■ **Par. 4.** Section 1.6038A–2T is removed.

Mark E. Matthews,

Deputy Commissioner for Services and Enforcement.

Approved: August 30, 2004.

Gregory Jenner,

Acting Assistant Secretary of the Treasury.

[FR Doc. 04–20804 Filed 9–14–04; 8:45 am]

BILLING CODE 4830–01–P

PENSION BENEFIT GUARANTY CORPORATION

29 CFR Parts 4022 and 4044

Benefits Payable in Terminated Single-Employer Plans; Allocation of Assets in Single-Employer Plans; Interest Assumptions for Valuing and Paying Benefits

AGENCY: Pension Benefit Guaranty Corporation.

ACTION: Final rule.

SUMMARY: The Pension Benefit Guaranty Corporation's regulations on Benefits Payable in Terminated Single-Employer Plans and Allocation of Assets in Single-Employer Plans prescribe interest assumptions for valuing and paying benefits under terminating single-employer plans. This final rule amends the regulations to adopt interest assumptions for plans with valuation dates in October 2004. Interest assumptions are also published on the PBGC's Web site (*http://www.pbgc.gov*).

DATES: Effective October 1, 2004.

FOR FURTHER INFORMATION CONTACT: Harold J. Ashner, Assistant General Counsel, Office of the General Counsel, Pension Benefit Guaranty Corporation, 1200 K Street, NW., Washington, DC 20005, 202–326–4024. (TTY/TDD users may call the Federal relay service toll-free at 1–800–877–8339 and ask to be connected to 202–326–4024.)

SUPPLEMENTARY INFORMATION: The PBGC's regulations prescribe actuarial assumptions—including interest assumptions—for valuing and paying plan benefits of terminating single-employer plans covered by title IV of the Employee Retirement Income Security Act of 1974. The interest assumptions are intended to reflect current conditions in the financial and annuity markets.

Three sets of interest assumptions are prescribed: (1) A set for the valuation of benefits for allocation purposes under section 4044 (found in Appendix B to part 4044), (2) a set for the PBGC to use to determine whether a benefit is payable as a lump sum and to determine lump-sum amounts to be paid by the PBGC (found in Appendix B to part 4022), and (3) a set for private-sector pension practitioners to refer to if they wish to use lump-sum interest rates determined using the PBGC's historical methodology (found in Appendix C to part 4022).

Accordingly, this amendment (1) adds to Appendix B to part 4044 the interest assumptions for valuing benefits for allocation purposes in plans with valuation dates during October 2004, (2) adds to Appendix B to part 4022 the interest assumptions for the PBGC to use for its own lump-sum payments in plans with valuation dates during October 2004, and (3) adds to Appendix C to part 4022 the interest assumptions for private-sector pension practitioners to refer to if they wish to use lump-sum interest rates determined using the PBGC's historical methodology for valuation dates during October 2004.

For valuation of benefits for allocation purposes, the interest assumptions that the PBGC will use (set forth in Appendix B to part 4044) will be 4.00 percent for the first 20 years following the valuation date and 5.00 percent thereafter. These interest assumptions represent a decrease (from those in effect for September 2004) of 0.20

percent for the first 20 years following the valuation date and are otherwise unchanged.

The interest assumptions that the PBGC will use for its own lump-sum payments (set forth in Appendix B to part 4022) will be 3.00 percent for the period during which a benefit is in pay status and 4.00 percent during any years preceding the benefit's placement in pay status. These interest assumptions represent a decrease (from those in effect for September 2004) of 0.25 percent for the period during which a benefit is in pay status and are otherwise unchanged.

For private-sector payments, the interest assumptions (set forth in Appendix C to part 4022) will be the same as those used by the PBGC for determining and paying lump sums (set forth in Appendix B to part 4022).

The PBGC has determined that notice and public comment on this amendment are impracticable and contrary to the public interest. This finding is based on the need to determine and issue new interest assumptions promptly so that the assumptions can reflect, as accurately as possible, current market conditions.

Because of the need to provide immediate guidance for the valuation and payment of benefits in plans with valuation dates during October 2004, the PBGC finds that good cause exists for making the assumptions set forth in this amendment effective less than 30 days after publication.

The PBGC has determined that this action is not a ''significant regulatory action'' under the criteria set forth in Executive Order 12866.

Because no general notice of proposed rulemaking is required for this amendment, the Regulatory Flexibility Act of 1980 does not apply. *See* 5 U.S.C. 601(2).

List of Subjects

29 CFR Part 4022

Employee benefit plans, Pension insurance, Pensions, Reporting and recordkeeping requirements.

29 CFR Part 4044

Employee benefit plans, Pension insurance, Pensions.

■ In consideration of the foregoing, 29 CFR parts 4022 and 4044 are amended as follows:

PART 4022—BENEFITS PAYABLE IN TERMINATED SINGLE-EMPLOYER PLANS

■ 1. The authority citation for part 4022 continues to read as follows:

Authority: 29 U.S.C. 1302, 1322, 1322b, 1341(c)(3)(D), and 1344.

■ 2. In appendix B to part 4022, Rate Set 132, as set forth below, is added to the table. (The introductory text of the table is omitted.)

Appendix B to Part 4022—Lump Sum Interest Rates for PBGC Payments

* * * * *

Rate set	For plans with a valuation date		Immediate annuity rate (percent)	Deferred annuities (percent)				
	On or after	Before		i_1	i_2	i_3	n_1	n_2
*	*	*	*	*	*	*	*	
132	10–1–04	11–1–04	3.00	4.00	4.00	4.00	7	8

■ 3. In appendix C to part 4022, Rate Set 132, as set forth below, is added to the table. (The introductory text of the table is omitted.)

Appendix C to Part 4022—Lump Sum Interest Rates for Private-Sector Payments

* * * * *

Rate set	For plans with a valuation date		Immediate annuity rate (percent)	Deferred annuities (percent)				
	On or after	Before		i_1	i_2	i_3	n_1	n_2
*	*	*	*	*	*	*	*	
132	10–1–04	11–1–04	3.00	4.00	4.00	4.00	7	8

PART 4044—ALLOCATION OF ASSETS IN SINGLE-EMPLOYER PLANS

■ 4. The authority citation for part 4044 continues to read as follows:

Authority: 29 U.S.C. 1301(a), 1302(b)(3), 1341, 1344, 1362.

■ 5. In appendix B to part 4044, a new entry, as set forth below, is added to the table. (The introductory text of the table is omitted.)

Appendix B to Part 4044—Interest Rates Used to Value Benefits

* * * * *

For valuation dates occurring in the month—	The values of i_t are:					
	i_t	for t =	i_t	for t =	i_t	for t =
* * * *		*		*		*
October 2004	.0400	1–20	.0500	>20	N/A	N/A

Issued in Washington, DC, on this 9th day of September, 2004.

Joseph H. Grant,

Deputy Executive Director and Chief Operating Officer, Pension Benefit Guaranty Corporation.

[FR Doc. 04–20737 Filed 9–14–04; 8:45 am]

BILLING CODE 7708–01–P

DEPARTMENT OF HOMELAND SECURITY

Coast Guard

33 CFR Part 165

[COTP San Francisco Bay 04–002]

RIN 1625–AA87

Security Zones; Monterey Bay and Humboldt Bay, CA

AGENCY: Coast Guard, DHS.

ACTION: Temporary final rule; change in effective period.

SUMMARY: The Coast Guard is revising the enforcement period of moving and fixed security zones extending 100 yards in the U.S. navigable waters around and under all cruise ships, tank vessels, and High Interest Vessels (HIVs) that enter, are moored or anchored in, or depart from the designated waters of Monterey Bay or Humboldt Bay, California. These security zones are needed for national security reasons to protect the public and ports of Monterey Bay and Humboldt Bay from potential subversive acts. Entry into these security zones is prohibited, unless specifically authorized by the Captain of the Port San Francisco Bay, or his designated representative.

DATES: This rule is effective from 11:59:01 p.m. on September 5, 2004, to 11:59 p.m. on March 5, 2005.

ADDRESSES: Documents indicated in this preamble, as being available in the docket, are part of docket COTP San Francisco Bay 04–002 and are available for inspection or copying at the Waterways Management Branch between 9 a.m. and 4 p.m., Monday through Friday, except Federal holidays.

FOR FURTHER INFORMATION CONTACT: Lieutenant Doug Ebbers, Waterways Management Branch, U.S. Coast Guard Marine Safety Office San Francisco Bay, (510) 437–2770.

SUPPLEMENTARY INFORMATION:

Regulatory Information

We did not publish a notice of proposed rulemaking (NPRM) for this regulation. Under 5 U.S.C. 553(b)(B), the Coast Guard finds that good cause exists for not publishing an NPRM because the threat to U.S. assets and the public currently exists and is ongoing. Under 5 U.S.C. 553(d)(3), the Coast Guard finds that good cause exists for making this rule effective less than 30 days after publication in the **Federal Register** because the threat of maritime attacks is real as evidenced by the October 2002 attack of a tank vessel off the coast of Yemen and the continuing threat to U.S. assets as described in the President's finding in Executive Order 13273 of August 21, 2002 (67 FR 56215, September 3, 2002), that the security of the U.S. is endangered by the September 11, 2001, attacks and that such disturbances continue to endanger the international relations of the United States. *See also* Continuation of the National Emergency with Respect to Certain Terrorist Attacks, (67 FR 58317, September 13, 2002); Continuation of the National Emergency With Respect To Persons Who Commit, Threaten To Commit, Or Support Terrorism, (67 FR 59447, September 20, 2002). Additionally, a Maritime Advisory was issued to: Operators of U.S. Flag and Effective U.S. controlled Vessels and other Maritime Interests, detailing the current threat of attack, MARAD 02–07 (October 10, 2002). As a result, a heightened level of security has been established around all cruise ships, tank vessels, and High Interest Vessels (HIVs) in Monterey Bay and Humboldt Bay, California. Additionally, the measures contemplated by this rule are intended to prevent future terrorist attacks against individuals and facilities within or adjacent to cruise ships, tank vessels, and HIVs located in Monterey Bay and Humboldt Bay. Any delay in the effective date of this TFR is impractical and contrary to the public interest.

In addition to this temporary final rule (TFR), we will be publishing a notice of proposed rulemaking (NPRM) under docket COTP San Francisco Bay 04–003, in which we propose to make permanent these temporary security zones around cruise ships, tank vessels, and HIVs in Monterey Bay and Humboldt Bay. In the NPRM, we propose to amend 33 CFR 165.1183, which was added by the final rule (COTP San Francisco Bay 02–019) published in the **Federal Register** (67 FR 79854) on December 31, 2002, and later amended by final rule (COTP San Francisco Bay 03–002) published in the **Federal Register** (69 FR 8817) on February 26, 2004. Section 165.1183, ''Security Zones; Cruise Ships, Tank Vessels, and High Interest Vessels, San Francisco Bay and Delta ports, California'', established security zones around cruise ships, tank vessels, and HIVs in the San Francisco Bay and Delta ports, but does not address security zones around these vessels when they are located in Monterey Bay and Humboldt Bay, California. This temporary rule will provide security in Monterey Bay and Humboldt Bay during a notice-and-comment rulemaking for a permanent rule, and § 165.1183 will remain in effect until amended by a future rule.

Background and Purpose

Since the September 11, 2001, terrorist attacks on the World Trade Center in New York, the Pentagon in Arlington, Virginia and Flight 93, the Federal Bureau of Investigation (FBI) has issued several warnings concerning the potential for additional terrorist attacks within the United States. In addition, the ongoing hostilities in Afghanistan and the conflict in Iraq have made it prudent for U.S. ports to be on a higher state of alert because Al-Qaeda and other organizations have declared an ongoing intention to conduct armed attacks on U.S. interests worldwide.

The threat of maritime attacks is real as evidenced by the attack on the USS COLE and the subsequent attack in October 2002 against a tank vessel off the coast of Yemen. These threats manifest a continuing threat to U.S. assets as described in the President's finding in Executive Order 13273 of August 21, 2002 (67 FR 56215, September 3, 2002), that the security of the U.S. is endangered by the September 11, 2001, attacks and that such aggression continues to endanger the international relations of the United States. See also Continuation of the National Emergency with Respect to Certain Terrorist Attacks (67 FR 58317, September 13, 2002), and Continuation of the National Emergency with Respect to Persons Who Commit, Threaten To Commit, Or Support Terrorism (67 FR 59447, September 20, 2002). The U.S. Maritime Administration (MARAD) in Advisory 02–07 advised U.S. shipping interests to maintain a heightened status of alert against possible terrorist attacks. MARAD more recently issued Advisory 03–05 informing operators of maritime interests of increased threat possibilities to vessels and facilities and a higher risk of terrorist attack to the transportation community in the United States. Ongoing foreign hostilities have made it prudent for U.S. ports and waterways to be on a higher state of alert because the Al-Qaeda organization and other similar organizations have declared an ongoing intention to conduct armed attacks on U.S. interests worldwide.

In its effort to thwart terrorist activity, the Coast Guard has increased safety and security measures on U.S. ports and waterways. As part of the Diplomatic Security and Antiterrorism Act of 1986 (Pub. L. 99–399), Congress amended section 7 of the Ports and Waterways Safety Act (PWSA), 33 U.S.C. 1226, to allow the Coast Guard to take actions, including the establishment of security and safety zones, to prevent or respond to acts of terrorism against individuals, vessels, or public or commercial structures. The Coast Guard also has authority to establish security zones pursuant to the Act of June 15, 1917, as amended by the Magnuson Act of August 9, 1950 (50 U.S.C. 191 *et seq.*), and implementing regulations promulgated by the President in subparts 6.01 and 6.04 of part 6 of title 33 of the Code of Federal Regulations.

In this particular rulemaking, to address the aforementioned security concerns, and to take steps to prevent the catastrophic impact that a terrorist attack against a cruise ship, tank vessel, or HIV would have on the public interest, the Coast Guard is extending the enforcement period for security zones around and under cruise ships, tank vessels, and HIVs entering, departing, moored or anchored within designated waters of Monterey Bay and Humboldt Bay, California. These security zones help the Coast Guard to prevent vessels or persons from engaging in terrorist actions against these types of vessels. Due to these heightened security concerns, and the catastrophic impact a terrorist attack on a cruise ship, tank vessel, or HIV would have on the crew and passengers on board, and the surrounding area and communities, security zones are prudent for these types of vessels.

Discussion of Rule

On December 31, 2002, we published the final rule (COTP San Francisco Bay 02–019) adding § 165.1183, ''Security Zones; Cruise Ships and Tank Vessels, San Francisco Bay and Delta ports, California'' in the **Federal Register** (67 FR 79854). That section set forth security zones for cruise ships and tank vessels in San Francisco Bay and delta ports. A subsequent final rule (COTP San Francisco Bay 03–002) published in the **Federal Register** (69 FR 8817) on February 26, 2004, amended section 165.1183 to include HIVs as protected vessels in that section, along with cruise ships and tank vessels.

On March 29, 2004, we published a temporary final rule (COTP San Francisco Bay 04–002) in the **Federal Register** (69 FR 16163) that established security zones around all cruise ships, tank vessels, and HIVs that are anchored, moored or underway within designated waters of Monterey Bay and Humboldt Bay, California. In this temporary rule, the Coast Guard is extending the enforcement period of these security zones for an additional six months.

For Monterey Bay, a security zone is activated when any cruise ship, tank vessel, or HIV passes shoreward of a line drawn between Santa Cruz Light (LLNR 305) to the north in position 36°57.10′ N, 122°01.60′ W, and Cypress Point, Monterey to the south, in position 36°34.90′ N, 121°58.70′ W.

For Humboldt Bay, a security zone is activated when any cruise ship, tank vessel, or HIV enters an area within a 4 nautical mile radius line drawn west of the Humboldt Bay Entrance Lighted Whistle Buoy HB (LLNR 8130), in position 40°46.25′ N, 124°16.13′ W, or enters waters within the Humboldt Bay Harbor.

The security zone remains in effect while the cruise ship, tank vessel, or HIV is underway, anchored or moored within the designated waters of Monterey Bay or Humboldt Bay. When activated, the security zone will encompass all waters, extending from the surface to the sea floor, within 100 yards ahead, astern and extending 100 yards along either side of the vessel. This security zone is automatically deactivated when the vessel departs from the areas of Monterey Bay or Humboldt Bay designated in this rule. Vessels and people may be allowed to enter an established security zone on a case-by-case basis with authorization from the Captain of the Port.

The Captain of the Port will enforce this zone and may enlist the aid and cooperation of any Federal, State, county, municipal, and private agency to assist in the enforcement of the regulation. Section 165.33 of title 33, Code of Federal Regulations, prohibits any unauthorized person or vessel from entering or remaining in a security zone. Vessels or persons violating this section may be subject to the penalties set forth in 33 U.S.C. 1232 and 50 U.S.C. 192. Pursuant to 33 U.S.C. 1232, any violation of the security zone described herein, is punishable by civil penalties (not to exceed $32,500 per violation, where each day of a continuing violation is a separate violation), criminal penalties (imprisonment from 5 to 10 years and a maximum fine of $250,000), and in rem liability against the offending vessel. Any person who violates this section using a dangerous weapon, or who engages in conduct that causes bodily injury or fear of imminent bodily injury to any officer authorized to enforce this regulation, will also face imprisonment from 10 to 25 years. Vessels or persons violating this section are also subject to the penalties set forth in 50 U.S.C. 192: Seizure and forfeiture of the vessel to the United States, a maximum criminal fine of $10,000, imprisonment up to 10 years, and a civil penalty of not more than $25,000 for each day of a continuing violation.

Regulatory Evaluation

This rule is not a ''significant regulatory action'' under section 3(f) of Executive Order 12866, Regulatory Planning and Review, and does not require an assessment of potential costs and benefits under section 6(a)(3) of that Order. The Office of Management and Budget has not reviewed it under that Order. It is not ''significant'' under the regulatory policies and procedures of the Department of Homeland Security (DHS).

Although this regulation restricts access to a portion of navigable waters, the effect of this regulation will not be significant because: (i) The zones encompass only a small portion of the waterway; (ii) vessels are able to pass safely around the zones; and (iii) vessels may be allowed to enter these zones on a case-by-case basis with permission of the Captain of the Port or his designated representative.

The size of the zones is the minimum necessary to provide adequate protection for all cruise ships, tank vessels, and HIVs, other vessels operating in the vicinity of these vessels, adjoining areas, and the public. The entities most likely to be affected are fishing vessels and pleasure craft engaged in recreational activities and sightseeing.

Small Entities

Under the Regulatory Flexibility Act (5 U.S.C. 601–612), we have considered whether this rule would have a significant economic impact on a substantial number of small entities. The term ''small entities'' comprises small businesses, not-for-profit organizations that are independently owned and operated and are not dominant in their fields, and governmental jurisdictions with populations of less than 50,000.

The Coast Guard certifies under 5 U.S.C. 605(b) that this rule will not have a significant economic impact on a substantial number of small entities. We expect this rule may affect owners and operators of vessels, some of which may be small entities, intending to fish, sightsee, transit, or anchor in the waters affected by these security zones. These security zones will not have a

significant economic impact on a substantial number of small entities for several reasons: Small vessel traffic will be able to pass safely around the area and vessels engaged in recreational activities, sightseeing and commercial fishing have ample space outside of the security zones to engage in these activities. Small entities and the maritime public will be advised of these security zones via public notice to mariners.

Assistance for Small Entities

Under section 213(a) of the Small Business Regulatory Enforcement Fairness Act of 1996 (Pub. L. 104–121), we offer to assist small entities in understanding the rule so that they could better evaluate its effects on them and participate in the rulemaking process. If the rule will affect your small business, organization, or government jurisdiction and you have questions concerning its provisions or options for compliance, please contact the person listed under **FOR FURTHER INFORMATION CONTACT** for assistance in understanding this rule.

Small businesses may send comments on the actions of Federal employees who enforce, or otherwise determine compliance with, Federal regulations to the Small Business and Agriculture Regulatory Enforcement Ombudsman and the Regional Small Business Regulatory Fairness Boards. The Ombudsman evaluates these actions annually and rates each agency's responsiveness to small business. If you wish to comment on actions by employees of the Coast Guard, call 1–888–REG–FAIR (1–888–734–3247).

Collection of Information

This rule calls for no new collection of information under the Paperwork Reduction Act of 1995 (44 U.S.C. 3501–3520).

Federalism

A rule has implications for federalism under Executive Order 13132, Federalism, if it has a substantial direct effect on State or local governments and would either preempt State law or impose a substantial direct cost of compliance on them. We have analyzed this rule under that Order and have determined that it does not have implications for federalism.

Unfunded Mandates Reform Act

The Unfunded Mandates Reform Act of 1995 (2 U.S.C. 1531–1538) requires Federal agencies to assess the effects of their discretionary regulatory actions. In particular, the Act addresses actions that may result in the expenditure by a State, local, or tribal government, in the aggregate, or by the private sector of $100,000,000 or more in any one year. Though this rule will not result in such an expenditure, we do discuss the effects of this rule elsewhere in this preamble.

Taking of Private Property

This rule will not effect a taking of private property or otherwise have taking implications under Executive Order 12630, Governmental Actions and Interference with Constitutionally Protected Property Rights.

Civil Justice Reform

This rule meets applicable standards in sections 3(a) and 3(b)(2) of Executive Order 12988, Civil Justice Reform, to minimize litigation, eliminate ambiguity, and reduce burden.

Protection of Children

We have analyzed this rule under Executive Order 13045, Protection of Children from Environmental Health Risks and Safety Risks. This rule is not an economically significant rule and does not create an environmental risk to health or risk to safety that may disproportionately affect children.

Indian Tribal Governments

This rule does not have tribal implications under Executive Order 13175, Consultation and Coordination with Indian Tribal Governments, because it does not have a substantial direct effect on one or more Indian tribes, on the relationship between the Federal Government and Indian tribes, or on the distribution of power and responsibilities between the Federal Government and Indian tribes.

Energy Effects

We have analyzed this rule under Executive Order 13211, Actions Concerning Regulations That Significantly Affect Energy Supply, Distribution, or Use. We have determined that it is not a ''significant energy action'' under that order because it is not a ''significant regulatory action'' under Executive Order 12866 and is not likely to have a significant adverse effect on the supply, distribution, or use of energy. The Administrator of the Office of Information and Regulatory Affairs has not designated it as a significant energy action. Therefore, it does not require a Statement of Energy Effects under Executive Order 13211.

Technical Standards

The National Technology Transfer and Advancement Act (NTTAA) (15 U.S.C. 272 note) directs agencies to use voluntary consensus standards in their regulatory activities unless the agency provides Congress, through the Office of Management and Budget, with an explanation of why using these standards would be inconsistent with applicable law or otherwise impractical. Voluntary consensus standards are technical standards (*e.g.*, specifications of materials, performance, design, or operation; test methods; sampling procedures; and related management systems practices) that are developed or adopted by voluntary consensus standards bodies.

This proposed rule does not use technical standards. Therefore, we did not consider the use of voluntary consensus standards.

Environment

We have analyzed this rule under Commandant Instruction M16475.lD, which guides the Coast Guard in complying with the National Environmental Policy Act of 1969 (NEPA) (42 U.S.C. 4321–4370f), and have concluded that there are no factors in this case that would limit the use of a categorical exclusion under section 2.B.2 of the Instruction. Therefore, this rule is categorically excluded, under figure 2–1, paragraph (34)(g), of the Instruction, from further environmental documentation because we are establishing a security zone.

A final ''Environmental Analysis Check List'' and a final ''Categorical Exclusion Determination'' will be available in the docket where located under **ADDRESSES.**

List of Subjects in 33 CFR Part 165

Harbors, Marine safety, Navigation (water), Reporting and recordkeeping requirements, Security measures, Waterways.

■ For the reasons discussed in the preamble, the Coast Guard amends 33 CFR part 165 as follows:

PART 165—REGULATED NAVIGATION AREAS AND LIMITED ACCESS AREAS

■ 1. The authority citation for part 165 continues to read as follows:

Authority: 33 U.S.C. 1226, 1231; 46 U.S.C. Chapter 701; 50 U.S.C. 191, 195; 33 CFR 1.05–1(g), 6.04–1, 6.04–6, and 160.5; Pub. L. 107–295, 116 Stat. 2064; Department of Homeland Security Delegation No. 0170.1.

■ 2. Reinstate temporary § 165.T11–004, and revise paragraph (f) to read as follows:

§ 165.T11–004 Security Zones; Monterey Bay and Humboldt Bay, California.

(a) *Definitions.* As used in this section—

Cruise ship means a passenger vessel, except for a ferry, over 100 feet in length, authorized to carry more than 12 passengers for hire; making voyages lasting more than 24 hours, any part of which is on the high seas; and for which passengers are embarked or disembarked in the ports of Monterey or Humboldt Bay.

High Interest Vessel or *HIV* means any vessel deemed by the Captain of the Port or higher authority as a vessel requiring protection based upon risk assessment analysis of the vessel and is therefore escorted by a Coast Guard or other law enforcement vessel with an embarked Coast Guard commissioned, warrant, or petty officer.

Tank vessel means any self-propelled tank ship that is constructed or adapted primarily to carry oil or hazardous material in bulk as cargo or cargo residue in the cargo spaces. The definition of tank ship does not include tank barges.

(b) *Locations.* The following areas are security zones:

(1) *Monterey Bay.* All waters extending from the surface to the sea floor, within 100 yards of all cruise ships, tank vessels, and HIVs within the waters of Monterey Bay east of a line drawn between Santa Cruz Light (LLNR 305) to the north in position 36°57.10′ N, 122°01.60′ W, and Cypress Point, Monterey to the south, in position 36°34.90′ N, 121°58.70′ W.

(2) *Humboldt Bay.* All waters extending from the surface to the sea floor, within 100 yards of all cruise ships, tank vessels, and HIVs within the waters of Humboldt Bay and the waters of the Pacific Ocean within a 4 nautical mile radius of the Humboldt Bay Entrance Lighted Whistle Buoy HB (LLNR 8130), in position 40°46.25′ N, 124°16.13′ W.

(c) *Regulations.* (1) In accordance with the general regulations in § 165.33 of this part, entry into these security zones is prohibited, unless doing so is specifically authorized by the Captain of the Port San Francisco Bay, or his designated representative.

(2) Persons desiring to transit the area of a security zone may contact the Captain of the Port at telephone number 415–399–3547 or on VHF-FM channel 16 (156.8 MHz) to seek permission to transit the area. If permission is granted, all persons and vessels must comply with the instructions of the Captain of the Port or his or her designated representative.

(3) When a cruise ship, tank vessel, or HIV approaches within 100 yards of a vessel that is moored or anchored, the stationary vessel must stay moored or anchored while it remains within the cruise ship, tank vessel or HIV's security zone unless it is either ordered by, or given permission from, the COTP San Francisco Bay to do otherwise.

(d) *Authority.* The authority for this section includes 33 U.S.C. 1226, 1231; 50 U.S.C. 191, 195.

(e) *Enforcement.* All persons and vessels shall comply with the instructions of the Coast Guard Captain of the Port or the designated on-scene patrol personnel. Patrol personnel comprise commissioned, warrant, and petty officers of the Coast Guard onboard Coast Guard, Coast Guard Auxiliary, local, state, and federal law enforcement vessels. Upon being hailed by U.S. Coast Guard patrol personnel by siren, radio, flashing light, or other means, the operator of a vessel shall proceed as directed. The U.S. Coast Guard may be assisted in the patrol and enforcement of these security zones by local law enforcement as necessary.

(f) *Effective period.* This section is effective from 11:59 p.m. on March 5, 2004, to 11:59 p.m. on March 5, 2005.

Dated: August 31, 2004.

Gerald M. Swanson,

Captain, U.S. Coast Guard, Captain of the Port, San Francisco Bay, California.

[FR Doc. 04–20717 Filed 9–14–04; 8:45 am]

BILLING CODE 4910–15–P

NATIONAL ARCHIVES AND RECORDS ADMINISTRATION

36 CFR Part 1254

RIN 3095–AB10

Revision of NARA Research Room Procedures; Correction

AGENCY: National Archives and Records Administration (NARA).

ACTION: Correcting amendment.

SUMMARY: This document contains a correction to the final regulations, which were published in the **Federal Register** of Wednesday, June 30, 2004, (69 FR 39313). The regulations related to the revision of NARA research room procedures.

DATES: Effective on July 30, 2004.

FOR FURTHER INFORMATION CONTACT: Jennifer Davis Heaps at (301) 837–1801.

SUPPLEMENTARY INFORMATION:

Background

The final regulations that are the subject of this correction apply to the use of personal paper-to-paper copiers at the National Archives at College Park and affect the public.

Need for Correction

As published, the final regulations omitted the Office of Management and Budget (OMB) Control Number for the information collection described in § 1254.86(a).

List of Subjects in 36 CFR Part 1254

Archives and records, Micrographics.

■ Accordingly, 36 CFR part 1254 is corrected by making the following correcting amendment:

PART 1254—USING RECORDS AND DONATED HISTORICAL MATERIALS

■ 1. The authority citation for part 1254 continues to read as follows:

Authority: 44 U.S.C. 2101–2118.

■ 2. Add paragraph (h) to § 1254.86 to read as follows:

§ 1254.86 May I use a personal paper-to-paper copier at the National Archives at College Park?

* * * * *

(h) The collection of information contained in this section has been approved by the Office of Management and Budget with the control number 3095–0035.

Dated: September 10, 2004.

Nancy Y. Allard,

Federal Register Liaison.

[FR Doc. 04–20762 Filed 9–14–04; 8:45 am]

BILLING CODE 7515–01–P

DEPARTMENT OF COMMERCE

Patent and Trademark Office

37 CFR Parts 1 and 41

[Docket No. 2003–C–027]

RIN 0651–AB70

Revision of Patent Fees for Fiscal Year 2005; Correction

AGENCY: Patent and Trademark Office, Commerce.

ACTION: Final rule; correction.

SUMMARY: The United States Patent and Trademark Office published in the **Federal Register** of August 27, 2004, a final rule revising certain patent fee amounts for fiscal year 2005. Inadvertently, an incorrect fee amount was stated for an appeal fee in section 41.20(b)(3). This notice corrects this appeal fee amount for fiscal year 2005.

DATES: Effective October 1, 2004.

FOR FURTHER INFORMATION CONTACT: Tamara McClure by e-mail at *Tamara.McClure@uspto.gov,* by

telephone at (703) 308–5075, or by fax at (703) 308–5077.

SUPPLEMENTARY INFORMATION: A final rule revising certain patent fee amounts for fiscal year 2005 was published as FR Doc. 69–52604 in the **Federal Register** of August 27, 2004 (69 FR 52604). The final rule contains an error for an appeal fee in section 41.20(b)(3). The fee amount for fiscal year 2005 was incorrectly stated as $170.00 for a small entity, and $340.00 for other than a small entity. This correction revises this appeal fee amount.

■ In rule FR Doc. 69–52604 published on August 27, 2004 (69 FR 52604), make the following correction. On page 52606, in the third column, change the appeal fee amount for 41.20(b)(3) to $150.00 for a small entity, and $300.00 for other than a small entity.

Dated: September 8, 2004.

Jon W. Dudas,

Under Secretary of Commerce for Intellectual Property and Director of the United States Patent and Trademark Office.

[FR Doc. 04–20766 Filed 9–14–04; 8:45 am]

BILLING CODE 3510–16–P

POSTAL SERVICE

39 CFR Part 501

Authorization To Manufacture and Distribute Postage Meters

AGENCY: Postal Service.

ACTION: Final rule.

SUMMARY: This rule corrects outdated or incorrect information in the text of the cautionary label required to be placed on rented postage meters.

DATES: Effective September 15, 2004.

FOR FURTHER INFORMATION CONTACT: Stanley F. Mires, (202) 268–2958.

SUPPLEMENTARY INFORMATION: Amendment of part 501 is necessary to ensure that the cautionary labels required to be placed on rented postage meters contain current information.

List of Subjects in 39 CFR Part 501

Administrative practice and procedure.

■ For the reasons set forth above, the Postal Service amends 39 CFR part 501 as follows:

PART 501—[AMENDED]

■ 1. The authority citation for part 501 continues to read as follows:

Authority: 5 U.S.C. 552(a); 39 U.S.C. 101, 401, 403, 404, 410, 2601, 2605; Inspector General Act of 1978, as amended (Pub. L. 95–452, as amended), 5 U.S.C. App. 3.

■ 2. Revise § 501.23(r)(1) to read as follows:

§ 501.23 Distribution controls.

* * * * *

(r) * * *

(1) The cautionary label must be placed on all meters in a conspicuous and highly visible location. Words printed in capital letters should be emphasized, preferably printed in red. The minimum width of the label should be 3.25 inches, and the minimum height should be 1.75 inches. The label should read as follows:

RENTED POSTAGE METER—NOT FOR SALE PROPERTY OF [NAME OF MANUFACTURER]

Use of this meter is permissible only under U.S. Postal Service license. Call [Name of Manufacturer] at (800) ###–#### to relocate/return this meter.

WARNING! METER TAMPERING IS A FEDERAL OFFENSE. IF YOU SUSPECT METER TAMPERING, CALL POSTAL INSPECTORS AT 1–800–654–8896

REWARD UP TO $50,000 for information leading to the conviction of any person who misuses postage meters resulting in the Postal Service not receiving correct postage payments.

* * * * *

Previous versions of the cautionary label are out of date, and should be replaced by the manufacturer when the meter is returned by the licensee for any reason or inspected under § 501.26.

Stanley F. Mires,

Chief Counsel, Legislative.

[FR Doc. 04–20095 Filed 9–14–04; 8:45 am]

BILLING CODE 7710–12–P

ENVIRONMENTAL PROTECTION AGENCY

40 CFR Part 180

[OPP–2004–0254; FRL–7675–6]

Thiamethoxam; Pesticide Tolerances for Emergency Exemptions

AGENCY: Environmental Protection Agency (EPA).

ACTION: Final rule.

SUMMARY: This regulation establishes a time-limited tolerance for combined residues of thiamethoxam and CGA–322704 in or on cranberries at 0.02 parts per million (ppm). This action is in response to EPA's granting of an emergency exemption under section 18 of the Federal Insecticide, Fungicide, and Rodenticide Act (FIFRA) authorizing use of the pesticide on cranberries. This regulation establishes a maximum permissible level for residues of thiamethoxam in this food commodity. The tolerance will expire and is revoked on December 31, 2007.

DATES: This regulation is effective September 15, 2004. Objections and requests for hearings must be received on or before November 15, 2004.

ADDRESSES: To submit a written objection or hearing request, follow the detailed instructions as provided in Unit VII. of the **SUPPLEMENTARY INFORMATION.** EPA has established a docket for this action under Docket identification (ID) number OPP–2004–0254. All documents in the docket are listed in the EDOCKET index at *http://www.epa.gov/edocket.* Although listed in the index, some information is not publicly available, i.e., CBI or other information whose disclosure is restricted by statute. Certain other material, such as copyrighted material, is not placed on the Internet and will be publicly available only in hard copy form. Publicly available docket materials are available either electronically in EDOCKET or in hard copy at the Public Information and Records Integrity Branch (PIRIB), Rm. 119, Crystal Mall #2, 1801 S. Bell St., Arlington, VA. This docket facility is open from 8:30 a.m. to 4 p.m., Monday through Friday, excluding legal holidays. The docket telephone number is (703) 305–5805.

FOR FURTHER INFORMATION CONTACT: Stacey Milan Groce, Registration Division (7505C), Office of Pesticide Programs, Environmental Protection Agency, 1200 Pennsylvania Ave., NW., Washington, DC 20460–0001; telephone number: (703) 305–2505; e-mail address:*milan.stacey@epa.gov.*

SUPPLEMENTARY INFORMATION:

I. General Information

A. Does this Action Apply to Me?

You may be potentially affected by this action if you a Federal or State Government Agency involved in administration of environmental quality programs (i.e. United States Departments of Agriculture, Environment, etc). Potentially affected entities may include, but are not limited to:

- Federal or State Government Entity (NAICS 9241)

This listing is not intended to be exhaustive, but rather provides a guide for readers regarding entities likely to be affected by this action. Other types of entities not listed in this unit could also be affected. The North American Industrial Classification System (NAICS) codes have been provided to

assist you and others in determining whether this action might apply to certain entities. If you have any questions regarding the applicability of this action to a particular entity, consult the person listed under **FOR FURTHER INFORMATION CONTACT**.

B. How Can I Access Electronic Copies of this Document and Other Related Information?

In addition to using EDOCKET *(http://www.epa.gov/edocket/)*, you may access this **Federal Register** document electronically through the EPA Internet under the ''**Federal Register**'' listings at *http://www.epa.gov/fedrgstr/*. A frequently updated electronic version of 40 CFR part 180 is available at E-CFR Beta Site Two at *http://www.gpoaccess.gov/ecfr/*.

II. Background and Statutory Findings

EPA, on its own initiative, in accordance with sections 408(e) and 408 (l)(6) of the Federal Food, Drug, and Cosmetic Act (FFDCA), 21 U.S.C. 346a, is establishing a tolerance for combined residues of the insecticide thiamethoxam and CGA–322704, in or on cranberries at 0.02 parts per million (ppm). This tolerance will expire and is revoked on December 31, 2007. EPA will publish a document in the **Federal Register** to remove the revoked tolerance from the Code of Federal Regulations.

Section 408(l)(6) of the FFDCA requires EPA to establish a time-limited tolerance or exemption from the requirement for a tolerance for pesticide chemical residues in food that will result from the use of a pesticide under an emergency exemption granted by EPA under section 18 of FIFRA. Such tolerances can be established without providing notice or period for public comment. EPA does not intend for its actions on section 18 related tolerances to set binding precedents for the application of section 408 of the FFDCA and the new safety standard to other tolerances and exemptions. Section 408(e) of the FFDCA allows EPA to establish a tolerance or an exemption from the requirement of a tolerance on its own initiative, i.e., without having received any petition from an outside party.

Section 408(b)(2)(A)(i) of the FFDCA allows EPA to establish a tolerance (the legal limit for a pesticide chemical residue in or on a food) only if EPA determines that the tolerance is ''safe.'' Section 408(b)(2)(A)(ii) of the FFDCA defines ''safe'' to mean that ''there is a reasonable certainty that no harm will result from aggregate exposure to the pesticide chemical residue, including all anticipated dietary exposures and all other exposures for which there is reliable information.'' This includes exposure through drinking water and in residential settings, but does not include occupational exposure. Section 408(b)(2)(C) of the FFDCA requires EPA to give special consideration to exposure of infants and children to the pesticide chemical residue in establishing a tolerance and to ''ensure that there is a reasonable certainty that no harm will result to infants and children from aggregate exposure to the pesticide chemical residue. . . .''

Section 18 of the FIFRA authorizes EPA to exempt any Federal or State agency from any provision of FIFRA, if EPA determines that ''emergency conditions exist which require such exemption.'' This provision was not amended by the Food Quality Protection Act of 1996 (FQPA). EPA has established regulations governing such emergency exemptions in 40 CFR part 166.

III. Emergency Exemption for Thiamethoxam on Cranberries and FFDCA Tolerances

The State of Massachusetts has requested the use of thiamethoxam on cranberries to control cranberry weevil. EPA has authorized under FIFRA section 18 the use of thiamethoxam on cranberries for control of cranberry weevil in Massachusetts. After having reviewed the submission, EPA concurs that emergency conditions exist for this State.

As part of its assessment of this emergency exemption, EPA assessed the potential risks presented by residues of thiamethoxam in or on cranberries. In doing so, EPA considered the safety standard in section 408(b)(2) of the FFDCA, and EPA decided that the necessary tolerance under section 408(l)(6) of the FFDCA would be consistent with the safety standard and with FIFRA section 18. Consistent with the need to move quickly on the emergency exemption in order to address an urgent non-routine situation and to ensure that the resulting food is safe and lawful, EPA is issuing this tolerance without notice and opportunity for public comment as provided in section 408(l)(6) of the FFDCA. Although this tolerance will expire and is revoked on December 31, 2007, under section 408(l)(5) of the FFDCA, residues of the pesticide not in excess of the amounts specified in the tolerance remaining in or on cranberries after that date will not be unlawful, provided the pesticide is applied in a manner that was lawful under FIFRA, and the residues do not exceed a level that was authorized by this tolerance at the time of that application. EPA will take action to revoke this tolerance earlier if any experience with, scientific data on, or other relevant information on this pesticide indicate that the residues are not safe.

Because this tolerance is being approved under emergency conditions, EPA has not made any decisions about whether thiamethoxam meets EPA's registration requirements for use on cranberries or whether a permanent tolerance for this use would be appropriate. Under these circumstances, EPA does not believe that this tolerance serves as a basis for registration of thiamethoxam by a State for special local needs under FIFRA section 24(c). Nor does this tolerance serve as the basis for any State other than Massachusetts to use this pesticide on this crop under section 18 of FIFRA without following all provisions of EPA's regulations implementing FIFRA section 18 as identified in 40 CFR part 166. For additional information regarding the emergency exemption for thiamethoxam, contact the Agency's Registration Division at the address provided under **FOR FURTHER INFORMATION CONTACT**.

IV. Aggregate Risk Assessment and Determination of Safety

EPA performs a number of analyses to determine the risks from aggregate exposure to pesticide residues. For further discussion of the regulatory requirements of section 408 of the FFDCA and a complete description of the risk assessment process, see the final rule on Bifenthrin Pesticide Tolerances (62 FR 62961, November 26, 1997) (FRL–5754–7).

Consistent with section 408(b)(2)(D) of the FFDCA, EPA has reviewed the available scientific data and other relevant information in support of this action. EPA has sufficient data to assess the hazards of thiamethoxam and to make a determination on aggregate exposure, consistent with section 408(b)(2) of the FFDCA, for a time-limited tolerance for combined residues of thiamethoxam and CGA–322704 in or on cranberries at 0.02 ppm. EPA's assessment of the dietary exposures and risks associated with establishing the tolerance follows.

A. Toxicological Endpoints

The dose at which no adverse effects are observed (the NOAEL) from the toxicology study identified as appropriate for use in risk assessment is used to estimate the toxicological endpoint. However, the lowest dose at which adverse effects of concern are

identified (the LOAEL) is sometimes used for risk assessment if no NOAEL was achieved in the toxicology study selected. An uncertainty factor (UF) is applied to reflect uncertainties inherent in the extrapolation from laboratory animal data to humans and in the variations in sensitivity among members of the human population as well as other unknowns. An UF of 100 is routinely used, 10X to account for interspecies differences and 10X for intraspecies differences.

For dietary risk assessment (other than cancer) the Agency uses the UF to calculate an acute or chronic reference dose (acute RfD or chronic RfD) where the RfD is equal to the NOAEL divided by the appropriate UF (RfD = NOAEL/UF). Where an additional safety factor is retained due to concerns unique to the FQPA, this additional factor is applied to the RfD by dividing the RfD by such additional factor. The acute or chronic Population Adjusted Dose (aPAD or cPAD) is a modification of the RfD to accommodate this type of FQPA SF.

For non-dietary risk assessments (other than cancer) the UF is used to determine the level of concern (LOC). For example, when 100 is the appropriate UF (10X to account for interspecies differences and 10X for intraspecies differences) the LOC is 100. To estimate risk, a ratio of the NOAEL to exposures (margin of exposure (MOE) = NOAEL/exposure) is calculated and compared to the LOC.

The linear default risk methodology (Q*) is the primary method currently used by the Agency to quantify carcinogenic risk. The Q* approach assumes that any amount of exposure will lead to some degree of cancer risk. A Q* is calculated and used to estimate risk which represents a probability of occurrence of additional cancer cases (e.g., risk is expressed as 1×10^{-6} or one in a million). Under certain specific circumstances, MOE calculations will be used for the carcinogenic risk assessment. In this non- linear approach, a ''point of departure'' is identified below which carcinogenic effects are not expected. The point of departure is typically a NOAEL based on an endpoint related to cancer effects though it may be a different value derived from the dose response curve. To estimate risk, a ratio of the point of departure to exposure (MOE_{cancer} = point of departure/exposures) is calculated. For a detailed summary of the toxicological endpoints for thiamethoxam used for human risk assessment, refer to Table 1 in the August 27, 2003 **Federal Register** (68 FR 51471, FRL–7320–2) final rule establishing tolerances for the combined residues of thiamethoxam on hops, bean, succulent, and bean, dried.

B. Exposure Assessment

1. *Dietary exposure from food and feed uses.* Tolerances have been established (40 CFR 180.565) for the combined residues of thiamethoxam, in or on a variety of raw agricultural commodities. The following crop sites have established tolerances: Barley, canola, cotton, sorghum, wheat, tuberous and corn vegetables crop subgroup, fruiting vegetables crop group, tomato paste, cucurbit vegetables crop group, pome fruits crop group, milk and meat, and meat by products of cattle, goats, horses, and sheep. Risk assessments were conducted by EPA to assess dietary exposures from thiamethoxam in food as follows:

i. *Acute exposure.* Acute dietary risk assessments are performed for a food-use pesticide if a toxicological study has indicated the possibility of an effect of concern occurring as a result of a one day or single exposure. The Dietary Exposure Evaluation Model (DEEM™) analysis evaluated the individual food consumption as reported by respondents in the USDA 1994–1996 nationwide Continuing Surveys of Food Intake by Individuals (CSFII) and accumulated exposure to the chemical for each commodity. The following assumptions were made for the acute exposure assessments: Tolerance level residues and 100% crop treated.

ii. *Chronic exposure.* In conducting this chronic dietary risk assessment the DEEM™ analysis evaluated the individual food consumption as reported by respondents in the USDA 1994–1996 nationwide CSFII and accumulated exposure to the chemical for each commodity. The following assumptions were made for the chronic exposure assessments: Tier 3 analyses that incorporate anticipated residues and percent crop treated (PCT) refinements for most commodities.

iii. *Cancer.* The cancer exposure estimates are based on Tier 3 analyses that incorporate anticipated residues and PCT information for most commodities.

iv. *Anticipated residue and PCT information.* Section 408(b)(2)(E) of the FFDCA authorizes EPA to use available data and information on the anticipated residue levels of pesticide residues in food and the actual levels of pesticide chemicals that have been measured in food. If EPA relies on such information, EPA must require that data be provided 5 years after the tolerance is established, modified, or left in effect, demonstrating that the levels in food are not above the levels anticipated. Following the initial data submission, EPA is authorized to require similar data on a time frame it deems appropriate. As required by section 408(b)(2)(E) of the FFDCA, EPA will issue a Data Call-In for information relating to anticipated residues to be submitted no later than 5 years from the date of issuance of this tolerance.

Section 408(b)(2)(F) of the FFDCA states that the Agency may use data on the actual percent of food treated for assessing chronic dietary risk only if the Agency can make the following findings: Condition 1, that the data used are reliable and provide a valid basis to show what percentage of the food derived from such crop is likely to contain such pesticide residue; Condition 2, that the exposure estimate does not underestimate exposure for any significant subpopulation group; and Condition 3, if data are available on pesticide use and food consumption in a particular area, the exposure estimate does not understate exposure for the population in such area. In addition, the Agency must provide for periodic evaluation of any estimates used. To provide for the periodic evaluation of the estimate of PCT as required by section 408(b)(2)(F) of the FFDCA, EPA may require registrants to submit data on PCT.

The Agency used PCT information as follows: Potatoes, 19%; fruiting vegetables, 15%; cucumbers, 5%; melons, 13%; casabas, 44%; crenshaws, 44%; squash, 44%; pumpkins, 44%; apples, 5%; crabapples, 53%; pears, 9%; quinces, 53%; loquat, 53%; barley, 0.1%; sorghum, 9%; wheat, 2%; canola, 55%; cotton, 20%.

The Agency believes that the three conditions listed above have been met. With respect to Condition 1, PCT estimates are derived from Federal and private market survey data, which are reliable and have a valid basis. EPA uses a weighted average PCT for chronic dietary exposure estimates. This weighted average PCT figure is derived by averaging State-level data for a period of up to 10 years, and weighting for the more robust and recent data. A weighted average of the PCT reasonably represents a person's dietary exposure over a lifetime, and is unlikely to underestimate exposure to an individual because of the fact that pesticide use patterns (both regionally and nationally) tend to change continuously over time, such that an individual is unlikely to be exposed to more than the average PCT over a lifetime. For acute dietary exposure estimates, EPA uses an estimated maximum PCT. The exposure estimates resulting from this approach reasonably represent the highest levels to which an individual could be

exposed, and are unlikely to underestimate an individual's acute dietary exposure. The Agency is reasonably certain that the percentage of the food treated is not likely to be an underestimation. As to Conditions 2 and 3, regional consumption information and consumption information for significant subpopulations is taken into account through EPA's computer-based model for evaluating the exposure of significant subpopulations including several regional groups. Use of this consumption information in EPA's risk assessment process ensures that EPA's exposure estimate does not understate exposure for any significant subpopulation group and allows the Agency to be reasonably certain that no regional population is exposed to residue levels higher than those estimated by the Agency. Other than the data available through national food consumption surveys, EPA does not have available information on the regional consumption of food to which thiamethoxam may be applied in a particular area.

2. *Dietary exposure from drinking water*. The Agency lacks sufficient monitoring exposure data to complete a comprehensive dietary exposure analysis and risk assessment for thiamethoxam in drinking water. Because the Agency does not have comprehensive monitoring data, drinking water concentration estimates are made by reliance on simulation or modeling taking into account data on the physical characteristics of thiamethoxam.

The Agency uses the Generic Estimated Environmental Concentration (GENEEC) or the Pesticide Root Zone/ Exposure Analysis Modeling System (PRZM/EXAMS) to estimate pesticide concentrations in surface water and Screening Concentrations in Groundwater (SCI-GROW), which predicts pesticide concentrations in ground water. In general, EPA will use GENEEC (a tier 1 model) before using PRZM/EXAMS (a tier 2 model) for a screening-level assessment for surface water. The GENEEC model is a subset of the PRZM/EXAMS model that uses a specific high-end runoff scenario for pesticides. GENEEC incorporates a farm pond scenario, while PRZM/EXAMS incorporate an index reservoir environment in place of the previous pond scenario. The PRZM/EXAMS model includes a percent crop area factor as an adjustment to account for the maximum percent crop coverage within a watershed or drainage basin.

None of these models include consideration of the impact processing (mixing, dilution, or treatment) of raw water for distribution as drinking water would likely have on the removal of pesticides from the source water. The primary use of these models by the Agency at this stage is to provide a coarse screen for sorting out pesticides for which it is highly unlikely that drinking water concentrations would ever exceed human health levels of concern.

Since the models used are considered to be screening tools in the risk assessment process, the Agency does not use estimated environmental concentrations (EECs) from these models to quantify drinking water exposure and risk as a %RfD or %PAD. Instead drinking water levels of comparison (DWLOCs) are calculated and used as a point of comparison against the model estimates of a pesticide's concentration in water. DWLOCs are theoretical upper limits on a pesticide's concentration in drinking water in light of total aggregate exposure to a pesticide in food, and from residential uses. Since DWLOCs address total aggregate exposure to thiamethoxam they are further discussed in the aggregate risk sections below.

Based on the PRZM/EXAMS and SCI-GROW models the estimated environmental concentrations (EECs) of thiamethoxam for acute exposures are estimated to be 7.1 parts per billion (ppb) for surface water and 1.94 ppb for ground water. The EECs for chronic exposures are estimated to be 0.43 (non-cancer) and 0.13 ppb (cancer) for surface water and 1.94 ppb for ground water (cancer and non-cancer).

3. *From non-dietary exposure*. The term ''residential exposure'' is used in this document to refer to non-occupational, non-dietary exposure (e.g., for lawn and garden pest control, indoor pest control, termiticides, and flea and tick control on pets). Thiamethoxam is not registered for use on any sites that would result in residential exposure.

4. *Cumulative exposure to substances with a common mechanism of toxicity*. Section 408(b)(2)(D)(v) of the FFDCA requires that, when considering whether to establish, modify, or revoke a tolerance, the Agency consider ''available information'' concerning the cumulative effects of a particular pesticide's residues and ''other substances that have a common mechanism of toxicity.''

EPA does not have, at this time, available data to determine whether thiamethoxam has a common mechanism of toxicity with other substances or how to include this pesticide in a cumulative risk assessment. Unlike other pesticides for which EPA has followed a cumulative risk approach based on a common mechanism of toxicity, thiamethoxam does not appear to produce a toxic metabolite produced by other substances. For the purposes of this tolerance action, therefore, EPA has not assumed that thiamethoxam has a common mechanism of toxicity with other substances. For information regarding EPA's efforts to determine which chemicals have a common mechanism of toxicity and to evaluate the cumulative effects of such chemicals, see the final rule for Bifenthrin Pesticide Tolerances (62 FR 62961, November 26, 1997).

C. Safety Factor for Infants and Children

1. *In general*. Section 408 of the FFDCA provides that EPA shall apply an additional tenfold margin of safety for infants and children in the case of threshold effects to account for prenatal and postnatal toxicity and the completeness of the data base on toxicity and exposure unless EPA determines that a different margin of safety will be safe for infants and children. Margins of safety are incorporated into EPA risk assessments either directly through use of a MOE analysis or through using uncertainty (safety) factors in calculating a dose level that poses no appreciable risk to humans.

2. *Prenatal and postnatal sensitivity*. The developmental toxicity studies indicated no quantitative or qualitative evidence of increased susceptibility of rat or rabbit fetus to in utero exposure based on the fact that the developmental NOAELs are either higher than or equal to the maternal NOAELs. However, the reproductive studies indicate effects in male rats in the form of increased incidence and severity of testicular tubular atrophy. These data are considered to be evidence of increased quantitative susceptibility for male pups when compared to the parents.

3. *Conclusion. Based on*:

i. Effects on endocrine organs observed across species.

ii. The significant decrease in alanine amino transferase levels in the companion animal studies and in the dog studies.

iii. The mode of action of this chemical in insects (interferes with the nicotinic acetyl choline receptors of the insect's nervous system) thus a developmental neurotoxicity study is required.

iv. The transient clinical signs of neurotoxicity in several studies across species.

v. The suggestive evidence of increased quantitative susceptibility in the rat reproduction study, the Agency is retaining the FQPA factor which is l0X.

D. Aggregate Risks and Determination of Safety

To estimate total aggregate exposure to a pesticide from food, drinking water, and residential uses, the Agency calculates DWLOCs which are used as a point of comparison against the model estimates of a pesticide's concentration in water EECs. DWLOC values are not regulatory standards for drinking water. DWLOCs are theoretical upper limits on a pesticide's concentration in drinking water in light of total aggregate exposure to a pesticide in food and residential uses. In calculating a DWLOC, the Agency determines how much of the acceptable exposure (i.e., the PAD) is available for exposure through drinking water [e.g., allowable chronic water exposure (mg/kg/day) = cPAD - (average food + chronic non-dietary, non-occupational exposure). This allowable exposure through drinking water is used to calculate a DWLOC.

A DWLOC will vary depending on the toxic endpoint, drinking water consumption, and body weights. Default body weights and consumption values as used by the USEPA Office of Water are used to calculate DWLOCs: 2 liter (L)/70 kg (adult male), 2L/60 kg (adult female), and 1L/10 kg (child). Default body weights and drinking water consumption values vary on an individual basis. This variation will be taken into account in more refined screening-level and quantitative drinking water exposure assessments. Different populations will have different DWLOCs. Generally, a DWLOC is calculated for each type of risk assessment used: Acute, short-term, intermediate-term, chronic, and cancer.

When EECs for surface water and ground water are less than the calculated DWLOCs, OPP concludes with reasonable certainty that exposures to thiamethoxam in drinking water (when considered along with other sources of exposure for which OPP has reliable data) would not result in unacceptable levels of aggregate human health risk at this time. Because OPP considers the aggregate risk resulting from multiple exposure pathways associated with a pesticide's uses, levels of comparison in drinking water may vary as those uses change. If new uses are added in the future, OPP will reassess the potential impacts of thiamethoxam on drinking water as a part of the aggregate risk assessment process.

1. *Acute risk*. Using the exposure assumptions discussed in this unit for acute exposure, the acute dietary exposure from food to thiamethoxam will occupy 3% of the aPAD for the U.S. population, 2% of the aPAD for females 13 years and older, 7% of the aPAD for all infants < 1 year old and 9% of the aPAD for children 1–2 years old. In addition, despite the potential for acute dietary exposure to thiamethoxam in drinking water, after calculating DWLOCs and comparing them to conservative model estimated environmental concentrations of thiamethoxam in surface and ground water, EPA does not expect the aggregate exposure to exceed 100% of the aPAD.

2. *Chronic risk*. Using the exposure assumptions described in this unit for chronic exposure, EPA has concluded that exposure to thiamethoxam from food will utilize 4% of the cPAD for the U.S. population, 8% of the cPAD for all infants < 1 year old and 12% of the cPAD for children 1–2 years old. There are no residential uses for thiamethoxam that result in chronic residential exposure to thiamethoxam. In addition, despite the potential for chronic dietary exposure to thiamethoxam in drinking water, after calculating DWLOCs and comparing them to conservative model estimated environmental concentrations of thiamethoxam in surface water and ground water, EPA does not expect the aggregate exposure to exceed 100% of the cPAD.

For a detailed discussion of the aggregate risk assessments and determination of safety, refer to the August 27, 2003 (68 FR 51471, FRL–7320–2) final rule establishing tolerances for combined residues of thiamethoxam on hops, bean, succulent, and bean, dried. EPA relies upon that risk assessment and the findings made in the **Federal Register** document in support of this action.

3. *Short-term risk*. Short-term aggregate exposure takes into account residential exposure plus chronic exposure to food and water (considered to be a background exposure level). Thiamethoxam is not registered for use on any sites that would result in residential exposure. Therefore, the aggregate risk is the sum of the risk from food and water, which were previously addressed.

4. *Intermediate-term risk*. Intermediate-term aggregate exposure takes into account non-dietary, non-occupational exposure plus chronic exposure to food and water (considered to be a background exposure level). Thiamethoxam is not registered for use on any sites that would result in residential exposure. Therefore, the aggregate risk is the sum of the risk from food and water, which were previously addressed.

5. *Aggregate cancer risk for U.S. population*. At the present time, there are no uses of thiamethoxam that will result in non-dietary, non-occupational (i.e., residential) exposures. Therefore, aggregate cancer risk estimates for thiamethoxam address only the food and drinking water pathways of exposure. Estimated environmental concentrations for thiamethoxam for comparison to the DWLOCs is 1.94 µg/L for cancer scenarios. The Agency does not have aggregate risk concerns when the estimated residues in water are less than the DWLOCs.

For cancer risk, which is estimated for the total U.S. population only, the DWLOC is 2.15 µg/L and assumes a negligible risk level of 3×10^{-6}. For risk management purposes, EPA considers a cancer risk to be greater than negligible when it exceeds the range of 1 in 1 million, however the Agency has generally treated cancer risks up to 3 in 1 million as within the range of 1 in 1 million. The DWLOC value indicates that aggregate exposure to thiamethoxam is not likely to exceed the Agency's level of concern.

EPA recognizes that the active ingredient clothianidin is identical to the thiamethoxam metabolite-of-concern CGA–322704, however, clothianidin has not been classified as a carcinogen and therefore, it has been removed from the cancer assessment.

6. *Determination of safety*. Based on these risk assessments, EPA concludes that there is a reasonable certainty that no harm will result to the general population, and to infants and children from aggregate exposure to thiamethoxam residues.

V. Other Considerations

A. Analytical Enforcement Methodology

Adequate enforcement methodology High Performance Liquid Chromatography using ultra violet or mass spectrometry (HPLC/UV or MS) is available to enforce the tolerance expression. The method may be requested from: Calvin Furlow, PIRIB, IRSD (7502C), Office of Pesticide Programs, Environmental Protection Agency, 1200 Pennsylvania Ave., NW., Washington, DC 20460; telephone number: (703) 305–5229; e-mail address: *furlow.calvin@epa.gov*.

B. International Residue Limits

There are no CODEX, Canadian, or Mexican maximum residue limits that impact this action.

C. Conditions

Rotational crop restrictions. The thiamethoxam label currently contains the following rotational crop restriction: Immediate rotation to any crop on the label or to cucurbit vegetables, fruiting vegetables, cotton, sorghum, corn, wheat, barley, canola, tuberous and corm vegetables, and tobacco. For all other crops, a 120–day plant back interval must be observed.

VI. Conclusion

Therefore, the tolerance is established for the combined residues of thiamethoxam and CGA–322704, in or on cranberries at 0.02 ppm.

VII. Objections and Hearing Requests

Under section 408(g) of the FFDCA, as amended by the FQPA, any person may file an objection to any aspect of this regulation and may also request a hearing on those objections. The EPA procedural regulations which govern the submission of objections and requests for hearings appear in 40 CFR part 178. Although the procedures in those regulations require some modification to reflect the amendments made to the FFDCA by the FQPA, EPA will continue to use those procedures, with appropriate adjustments, until the necessary modifications can be made. The new section 408(g) of the FFDCA provides essentially the same process for persons to ''object'' to a regulation for an exemption from the requirement of a tolerance issued by EPA under new section 408(d) of the FFDCA, as was provided in the old sections 408 and 409 of the FFDCA. However, the period for filing objections is now 60 days, rather than 30 days.

A. What Do I Need to Do to File an Objection or Request a Hearing?

You must file your objection or request a hearing on this regulation in accordance with the instructions provided in this unit and in 40 CFR part 178. To ensure proper receipt by EPA, you must identify docket ID number OPP–2004–0254 in the subject line on the first page of your submission. All requests must be in writing, and must be mailed or delivered to the Hearing Clerk on or before November 15, 2004.

1. *Filing the request*. Your objection must specify the specific provisions in the regulation that you object to, and the grounds for the objections (40 CFR 178.25). If a hearing is requested, the objections must include a statement of the factual issues(s) on which a hearing is requested, the requestor's contentions on such issues, and a summary of any evidence relied upon by the objector (40 CFR 178.27). Information submitted in connection with an objection or hearing request may be claimed confidential by marking any part or all of that information as CBI. Information so marked will not be disclosed except in accordance with procedures set forth in 40 CFR part 2. A copy of the information that does not contain CBI must be submitted for inclusion in the public record. Information not marked confidential may be disclosed publicly by EPA without prior notice.

Mail your written request to: Office of the Hearing Clerk (1900L), Environmental Protection Agency, 1200 Pennsylvania Ave., NW., Washington, DC 20460–0001. You may also deliver your request to the Office of the Hearing Clerk in Suite 350, 1099 14th St., NW., Washington, DC 20005. The Office of the Hearing Clerk is open from 8 a.m. to 4 p.m., Monday through Friday, excluding legal holidays. The telephone number for the Office of the Hearing Clerk is (202) 564–6255.

2. *Copies for the Docket*. In addition to filing an objection or hearing request with the Hearing Clerk as described in Unit VII..A., you should also send a copy of your request to the PIRIB for its inclusion in the official record that is described in **ADDRESSES**. Mail your copies, identified by the docket ID number OPP–2004–0254, to: Public Information and Records Integrity Branch, Information Resources and Services Division (7502C), Office of Pesticide Programs, Environmental Protection Agency, 1200 Pennsylvania Ave., NW., Washington, DC 20460–0001. In person or by courier, bring a copy to the location of the PIRIB described in **ADDRESSES**. You may also send an electronic copy of your request via e-mail to: *opp-docket@epa.gov*. Please use an ASCII file format and avoid the use of special characters and any form of encryption. Copies of electronic objections and hearing requests will also be accepted on disks in WordPerfect 6.1/8.0 or ASCII file format. Do not include any CBI in your electronic copy. You may also submit an electronic copy of your request at many Federal Depository Libraries.

B. When Will the Agency Grant a Request for a Hearing?

A request for a hearing will be granted if the Administrator determines that the material submitted shows the following: There is a genuine and substantial issue of fact; there is a reasonable possibility that available evidence identified by the requestor would, if established resolve one or more of such issues in favor of the requestor, taking into account uncontested claims or facts to the contrary; and resolution of the factual issues(s) in the manner sought by the requestor would be adequate to justify the action requested (40 CFR 178.32).

VIII. Statutory and Executive Order Reviews

This final rule establishes a time-limited tolerance under section 408 of the FFDCA. The Office of Management and Budget (OMB) has exempted these types of actions from review under Executive Order 12866, entitled *Regulatory Planning and Review* (58 FR 51735, October 4, 1993). Because this rule has been exempted from review under Executive Order 12866 due to its lack of significance, this rule is not subject to Executive Order 13211, *Actions Concerning Regulations That Significantly Affect Energy Supply, Distribution, or Use* (66 FR 28355, May 22, 2001). This final rule does not contain any information collections subject to OMB approval under the Paperwork Reduction Act (PRA), 44 U.S.C. 3501 *et seq.*, or impose any enforceable duty or contain any unfunded mandate as described under Title II of the Unfunded Mandates Reform Act of 1995 (UMRA) (Public Law 104–4). Nor does it require any special considerations under Executive Order 12898, entitled *Federal Actions to Address Environmental Justice in Minority Populations and Low-Income Populations* (59 FR 7629, February 16, 1994); or OMB review or any Agency action under Executive Order 13045, entitled *Protection of Children from Environmental Health Risks and Safety Risks* (62 FR 19885, April 23, 1997). This action does not involve any technical standards that would require Agency consideration of voluntary consensus standards pursuant to section 12(d) of the National Technology Transfer and Advancement Act of 1995 (NTTAA), Public Law 104–113, section 12(d) (15 U.S.C. 272 note). Since tolerances and exemptions that are established on the basis of a FIFRA section 18 exemption under section 408 of the FFDCA, such as the tolerance in this final rule, do not require the issuance of a proposed rule, the requirements of the Regulatory Flexibility Act (RFA) (5 U.S.C. 601 *et seq.*) do not apply. In addition, the Agency has determined that this action will not have a substantial direct effect on States, on the relationship between the national government and the States, or on the distribution of power and responsibilities among the various levels of government, as specified in Executive Order 13132, entitled *Federalism* (64 FR 43255, August 10, 1999). Executive Order 13132 requires EPA to develop an accountable process

to ensure ''meaningful and timely input by State and local officials in the development of regulatory policies that have federalism implications.'' ''Policies that have federalism implications'' is defined in the Executive Order to include regulations that have ''substantial direct effects on the States, on the relationship between the national government and the States, or on the distribution of power and responsibilities among the various levels of government.'' This final rule directly regulates growers, food processors, food handlers, and food retailers, not States. This action does not alter the relationships or distribution of power and responsibilities established by Congress in the preemption provisions of section 408(n)(4) of the FFDCA. For these same reasons, the Agency has determined that this rule does not have any ''tribal implications'' as described in Executive Order 13175, entitled *Consultation and Coordination with Indian Tribal Governments* (65 FR 67249, November 6, 2000). Executive Order 13175, requires EPA to develop an accountable process to ensure ''meaningful and timely input by tribal officials in the development of regulatory policies that have tribal implications.'' ''Policies that have tribal implications'' is defined in the Executive Order to include regulations that have ''substantial direct effects on one or more Indian tribes, on the relationship between the Federal Government and the Indian tribes, or on the distribution of power and responsibilities between the Federal Government and Indian tribes.'' This rule will not have substantial direct effects on tribal governments, on the relationship between the Federal Government and Indian tribes, or on the distribution of power and responsibilities between the Federal Government and Indian tribes, as specified in Executive Order 13175. Thus, Executive Order 13175 does not apply to this rule.

IX. Congressional Review Act

The Congressional Review Act, 5 U.S.C. 801 *et seq.*, as added by the Small Business Regulatory Enforcement Fairness Act of 1996, generally provides that before a rule may take effect, the agency promulgating the rule must submit a rule report, which includes a copy of the rule, to each House of the Congress and to the Comptroller General of the United States. EPA will submit a report containing this rule and other required information to the U.S. Senate, the U.S. House of Representatives, and the Comptroller General of the United States prior to publication of this final rule in the **Federal Register**. This final rule is not a ''major rule'' as defined by 5 U.S.C. 804(2).

List of Subjects in 40 CFR Part 180

Environmental protection, Administrative practice and procedure, Agricultural commodities, Pesticides and pests, Reporting and recordkeeping requirements.

Dated: August 25, 2004.

Lois Rossi,

Director, Registration Division, Office of Pesticide Programs.

■ Therefore, 40 CFR chapter I is amended as follows:

PART 180—[AMENDED]

■ 1. The authority citation for part 180 continues to read as follows:

Authority: 21 U.S.C. 321(q), 346a and 371.

■ 2. Section 180.565 is amended by alphabetically adding the commodity to the table in paragraph (b) to read as follows:

§ 180.565 Thiamethoxam; tolerances for residues.

* * * * *

(b) * * *

Commodity	Parts per million	Expiration/revocation date
*	* *	* *
Cranberry	0.02 ppm	12/31/07
*	* *	* *

* * * * *

[FR Doc. 04–20797 Filed 9–14–04; 8:45 am]

BILLING CODE 6560–50–S

CHEMICAL SAFETY AND HAZARD INVESTIGATION BOARD

40 CFR Part 1620

Administrative Claims Arising Under the Federal Tort Claims Act

AGENCY: Chemical Safety and Hazard Investigation Board.

ACTION: Final rule.

SUMMARY: The Chemical Safety and Hazard Investigation Board (CSB) adopts the following rule to aid the processing of administrative claims for monetary damages filed under the Federal Tort Claims Act (FTCA). This rule provides information to members of the public who suffer loss or damage of property, personal injury, death, or other damages allegedly caused by the negligence or other wrongful act or omission of CSB officers or employees while acting in the scope of their office or employment. The rule also governs the procedures by which such claims are administratively processed.

DATES: This rule is effective November 15, 2004.

FOR FURTHER INFORMATION CONTACT: Christopher M. Lyon, CSB Office of General Counsel, (202) 261–7600.

SUPPLEMENTARY INFORMATION: The Federal Tort Claims Act (FTCA), 28 U.S.C. 1346(b), 2401(b), 2671–2680, waives the federal government's sovereign immunity to civil suits for damages in certain instances arising out of the negligent or otherwise wrongful acts or omissions committed by federal employees while acting within the scope of their employment. General regulations issued by the U.S. Department of Justice for processing FTCA claims, found at 28 CFR 14.11, authorize federal agencies to issue supplementing regulations. Accordingly, the CSB is adopting this rule to inform the public about the CSB's method of accepting and processing claims arising under the FTCA filed against the agency. This rule provides the public with guidance in presenting a tort claim against the CSB, while also ensuring that the agency has established procedures to receive, investigate and adjudicate such claims. The CSB published a proposed rule on administrative claims arising under the FTCA, and invited public comments on the rule, in the **Federal Register** of June 17, 2004 (69 FR 33879). No comments were received. This final rule is being published unchanged from the proposed version.

Regulatory Impact

Regulatory Flexibility Act

The Regulatory Flexibility Act (5 U.S.C. 601 *et seq.*) requires that a rule that has a significant economic impact on a substantial number of small entities, small businesses, or small organizations must include an initial regulatory flexibility analysis describing the regulation's impact on such small entities. This analysis need not be undertaken if the agency has certified that the regulation will not have a significant economic impact on a substantial number of small entities. 5 U.S.C. 605(b). The CSB has considered the impact of this rule under the Regulatory Flexibility Act. The CSB's General Counsel hereby certifies that this rule will not have a significant economic impact on a substantial number of small business entities.

Paperwork Reduction Act

This rule does not contain any information collection requirements that

require the approval of the Office of Management and Budget under the Paperwork Reduction Act (44 U.S.C. 3501 *et seq.*).

Unfunded Mandates Reform Act of 1995

This rule does not require the preparation of an assessment statement in accordance with the Unfunded Mandates Reform Act of 1995, 2 U.S.C. 1531. This rule does not include a Federal mandate that may result in the expenditure by State, local, and tribal governments, in the aggregate, or by the private sector, of $100 million or more (adjusted annually for inflation) in any one year.

List of Subjects in 40 CFR Part 1620

Claims, Administrative practice and procedure.

Dated: September 9, 2004.

Christopher W. Warner,

General Counsel.

■ Accordingly, for the reasons set forth in the preamble, the Chemical Safety and Hazard Investigation Board adds a new 40 CFR Part 1620 to read as follows:

PART 1620—ADMINISTRATIVE CLAIMS ARISING UNDER THE FEDERAL TORT CLAIMS ACT

Sec.

1620.1 Purpose and scope of regulations.
1620.2 Administrative claim; when presented.
1620.3 Administrative claim; who may file.
1620.4 Investigations.
1620.5 Administrative claim; evidence and information to be submitted.
1620.6 Authority to adjust, determine, compromise, and settle.
1620.7 Limitations on authority.
1620.8 Referral to Department of Justice.
1620.9 Final denial of claim.
1620.10 Action on approved claim.

Authority: 28 U.S.C. 2672; 42 U.S.C. 7412(r)(6)(N); 28 CFR 14.11.

§ 1620.1 Purpose and scope of regulations.

The regulations in this part apply only to administrative claims presented or filed with the Chemical Safety and Hazard Investigation Board (CSB), under the Federal Tort Claims Act (FTCA), 28 U.S.C. 1346(b), 2401(b), 2671–2680, as amended, for money damages against the United States for damage to or loss of property, personal injury, death, or other damages caused by the negligent or wrongful act or omission of an officer or employee of CSB while acting within the scope of his or her office or employment, but only under circumstances where the United States, if a private person, would be liable to the claimant in accordance with the law of the place where the act or omission occurred.

§ 1620.2 Administrative claim; when presented.

(a) For purposes of the provisions of 28 U.S.C. 2401(b), 2672, and 2675, a claim is deemed to have been presented when the CSB receives from a claimant, and/or his or her authorized agent, attorney, or other legal representative, an executed Standard Form 95 (Claim for Damage, Injury or Death), or other written notification of an incident, accompanied by a claim for money damages stating a sum certain (a specific dollar amount) for specified damage to or loss of property, personal injury, death, or other compensable damages alleged to have occurred as a result of the incident. A claimant must present a claim within 2 years of the date of accrual of the claim. The date of accrual generally is determined to be the time of death, injury, or other alleged damages, or if the alleged damages are not immediately apparent, when the claimant discovered (or reasonably should have discovered) the alleged damages and its cause, though the actual date of accrual will always depend on the facts of each case. Claimants should be advised that mailing a claim by the 2-year time limit is not sufficient if the CSB does not receive the claim through the mail by that date. Additionally, claimants should be advised that a claim is not considered presented by the CSB until the CSB receives all information requested in this paragraph. Incomplete claims will be returned to the claimant.

(b) All claims filed under the FTCA as a result of the alleged negligence or wrongful act or omission of the CSB or its employees must be mailed or delivered to the Office of the General Counsel, 2175 K Street NW., Suite 650, Washington, DC 20037.

(c) The FTCA requires that a claim must be presented to the Federal agency whose activities gave rise to the claim. A claim that should have been presented to CSB, but was mistakenly addressed to or filed with another Federal agency, is presented to the CSB, as required by 28 U.S.C. 2401(b), as of the date the claim is received by the CSB. When a claim is mistakenly presented to the CSB, the CSB will transfer the claim to the appropriate Federal agency, if ascertainable, and advise the claimant of the transfer, or return the claim to the claimant if the appropriate Federal agency cannot be determined.

(d) A claimant whose claim arises from an incident involving the CSB and one or more other Federal agencies will identify each agency to which the claim has been submitted at the time the claim is presented to the CSB. The CSB will contact all other affected Federal agencies in order to designate a single agency that will investigate and decide the merits of the claim. In the event a designation cannot be agreed upon by the affected agencies, the Department of Justice will be consulted and that agency will designate a specific agency to investigate and determine the merits of the claim. The designated agency will then notify the claimant that all future correspondence concerning the claim must be directed to the designated Federal agency. All involved Federal agencies may agree to conduct their own administrative reviews and to coordinate the results, or to have the investigation conducted solely by the designated Federal agency. However, in any event, the designated agency will be responsible for the final determination of the claim.

(e) A claim presented in compliance with paragraph (a) of this section may be amended by the claimant at any time prior to final agency action or prior to the exercise of the claimant's option under 28 U.S.C. 2675(a). Amendments must be in writing and signed by the claimant or his or her authorized agent, attorney, or other legal representative. Upon the timely filing of an amendment to a pending claim, the CSB will have an additional 6 months in which to investigate the claim and to make a final disposition of the claim as amended. A claimant's option under 28 U.S.C. 2675(a) will not accrue until 6 months after the filing of an amendment.

§ 1620.3 Administrative claim; who may file.

(a) A claim for damage to or loss of property may be presented by the owner of the property, or his or her authorized agent, attorney, or other legal representative.

(b) A claim for personal injury may be presented by the injured person, or his or her authorized agent, attorney or other legal representative.

(c) A claim based on death may be presented by the executor or administrator of the decedent's estate, or by any other person legally entitled to assert a claim under the applicable State law, provided that the basis for the representation is documented in writing.

(d) A claim for loss totally compensated by an insurer with the rights to subrogate may be presented by the insurer. A claim for loss partially compensated by an insurer with the rights to subrogate may be presented by the insurer or the insured individually

as their respective interests appear, or jointly. When an insurer presents a claim asserting the rights to subrogate the insurer must present appropriate evidence that it has the rights to subrogate.

(e) A claim presented by an agent or legal representative must be presented in the name of the claimant, be signed by the agent, attorney, or other legal representative, show the title or legal capacity of the person signing, and be accompanied by evidence of his or her authority to present a claim on behalf of the claimant as agent, attorney, executor, administrator, parent, guardian, conservator, or other legal representative.

§ 1620.4 Investigations.

CSB may investigate, or may request any other Federal agency to investigate, a claim filed under this part.

§ 1620.5 Administrative claim; evidence and information to be submitted.

(a) *Death.* In support of a claim based on death, the claimant may be required to submit the following evidence or information:

(1) An authenticated death certificate or other competent evidence showing cause of death, date of death, and age of the decedent.

(2) Decedent's employment or occupation at time of death, including his or her monthly or yearly salary or earnings (if any), and the duration of his or her last employment or occupation.

(3) Full names, addresses, birth date, kinship and marital status of the decedent's survivors, including identification of those survivors who were dependent on support provided by the decedent at the time of death.

(4) Degree of support afforded by the decedent to each survivor dependent on him or her for support at the time of death.

(5) Decedent's general physical and mental condition before death.

(6) Itemized bills for medical and burial expenses incurred by reason of the incident causing death, or itemized receipts of payment for such expenses.

(7) If damages for pain and suffering before death are claimed, a physician's detailed statement specifying the injuries suffered, duration of pain and suffering, any drugs administered for pain, and the decedent's physical condition in the interval between injuries and death.

(8) True and correct copies of relevant medical treatment records, laboratory and other tests, including X-Rays, MRI, CT scans and other objective evidence of medical evaluation and diagnosis, treatment of injury/illness, and prognosis, if any had been made.

(9) Any other evidence or information that may have a bearing on either the responsibility of the United States for the death or the amount of damages claimed.

(b) *Personal injury.* In support of a claim for personal injury, including pain and suffering, the claimant may be required to submit the following evidence or information:

(1) A written report by the attending physician or dentist setting forth the nature and extent of the injury, nature and extent of treatment, any degree of temporary or permanent disability, the prognosis, period of hospitalization, and any diminished earning capacity. If damages for pain and suffering are claimed, a physician's detailed statement specifying the duration of pain and suffering, a listing of drugs administered for pain, and the claimant's general physical condition.

(2) True and correct copies of relevant medical treatment records, laboratory and other tests including X-Rays, MRI, CT scans and other objective evidence of medical evaluation and diagnosis, treatment injury/illness and prognosis.

(3) The claimant may be required to submit to a physical or mental examination by a physician employed by CSB or another Federal agency. On written request, CSB will make available to the claimant a copy of the report of the examining physician employed by the United States, provided the claimant has furnished CSB with the information noted in paragraphs (b)(1) and (b)(2) of this section. In addition, the claimant must have made or agrees to make available to CSB all other physicians' reports previously or thereafter made of the physical or mental condition that is subject matter of his or her claim.

(4) Itemized bills for medical, dental, and hospital expenses incurred, and/or itemized receipts of payment for such expenses.

(5) If the prognosis reveals the necessity for future treatment, a statement of the expected treatment and the expected expense for such treatment.

(6) If a claim is made for loss of time from employment, a written statement from his or her employer showing actual time lost from employment, whether he or she is a full-time or part-time employee, and wages or salary actually lost.

(7) If a claim is made for loss of income and the claimant is self-employed, documentary evidence showing the amount of earnings actually lost.

(8) Any other evidence or information that may have a bearing on either the responsibility of the United States for the personal injury or the damages claimed.

(c) *Property damage.* In support of a claim for damage to or loss of property, real or personal, the claimant may be required to submit the following evidence or information:

(1) Proof of ownership of the property.

(2) A detailed statement of the amount claimed with respect to each item of property.

(3) An itemized receipt of payment for necessary repairs or itemized written estimates of the cost of such repairs.

(4) A statement listing date of purchase, purchase price, and salvage value.

(5) Photographs or video footage documenting the damage, including photographs showing the condition of the property at issue both before and after the alleged negligence or wrongful act or omission.

(6) Any other evidence or information that may have a bearing on either the responsibility of the United States for the damage to or loss of property or the damages claimed.

§ 1620.6 Authority to adjust, determine, compromise, and settle.

The General Counsel of CSB, or his or her designee, is delegated authority to consider, ascertain, adjust, determine, compromise and settle claims under the provision of 28 U.S.C. 2672, and this part. The General Counsel, in his or her discretion, has the authority to further delegate the responsibility for adjudicating, considering, adjusting, compromising and settling any claim submitted under the provision of 28 U.S.C. 2672, and this part, that is based on the alleged negligence or wrongful act or omission of a CSB employee acting in the scope of his or her employment. However, in any case, any offer of compromise or settlement in excess of $5,000 exercised by the CSB Chairperson or any other lawful designee can only be made after a legal review is conducted by an attorney within the CSB Office of General Counsel.

§ 1620.7 Limitations on authority.

(a) An award, compromise, or settlement of a claim under 28 U.S.C. 2672, and this part, in excess of $25,000 can be made only with the prior written approval of the CSB General Counsel and Chairperson, after consultation and approval by the Department of Justice. For purposes of this paragraph a principal claim and any derivative or subrogated claim will be treated as a single claim.

(b) An administrative claim may be adjusted, determined, compromised or

settled under this part only after consultation with the Department of Justice when, in the opinion of the General Counsel of CSB, or his or her designee:

(1) A new precedent or a new point of law is involved; or

(2) A question of policy is or may be involved; or

(3) The United States is or may be entitled to indemnity or contribution from a third party and CSB is unable to adjust the third party claim; or

(4) The compromise of a particular claim, as a practical matter, will or may control the disposition of a related claim in which the amount to be paid may exceed $25,000.

(c) An administrative claim may be adjusted, determined, compromised or settled under 28 U.S.C. 2672 and this part only after consultation with the Department of Justice when CSB is informed or is otherwise aware that the United States or an employee, agent or contractor of the United States is involved in litigation based on a claim arising out of the same incident or transaction.

§ 1620.8 Referral to Department of Justice.

When Department of Justice approval or consultation is required, or the advice of the Department of Justice is otherwise to be requested, under this regulation, the written referral or request will be transmitted to the Department of Justice by the General Counsel of CSB, or his or her designee.

§ 1620.9 Final denial of claim.

Final denial of an administrative claim must be in writing and sent to the claimant, his or her agent, attorney, or other legal representative by certified or registered mail. The notification of final denial may include a statement of the reasons for the denial. However, it must include a statement that, if the claimant is dissatisfied with the CSB action, he or she may file suit in an appropriate United States District Court not later than 6 months after the date of mailing of the notifications, along with the admonition that failure to file within this 6 month timeframe could result in the suit being time-barred by the controlling statute of limitations. In the event that a claimant does not hear from the CSB after 6 months have passed from the date that the claim was presented, a claimant should consider the claim denied and, if desired, should proceed with filing a civil action in the appropriate U.S. District Court.

§ 1620.10 Action on approved claim.

(a) Payment of a claim approved under this part is contingent on claimant's execution of a Standard Form 95 (Claim for Damage, Injury or Death); a claims settlement agreement; and a Standard Form 1145 (Voucher for Payment), as well as any other forms as may be required. When a claimant is represented by an attorney, the Voucher for Payment will designate both the claimant and his or her attorney as payees, and the check will be delivered to the attorney, whose address is to appear on the Voucher for payment.

(b) Acceptance by the claimant, his or her agent, attorney, or legal representative, of an award, compromise or settlement made under 28 U.S.C. 2672 or 28 U.S.C. 2677 is final and conclusive on the claimant, his or her agent, attorney, or legal representative, and any other person on whose behalf or for whose benefit the claim has been presented, and constitutes a complete release of any and all claims against the United States and against any employee of the Federal Government whose act(s) or omission(s) gave rise to the claim, by reason of the same subject matter. To that end, as noted above, the claimant, as well as any agent, attorney or other legal representative that represented the claimant during any phase of the process (if applicable) must execute a settlement agreement with the CSB prior to payment of any funds.

[FR Doc. 04–20771 Filed 9–14–04; 8:45 am]

BILLING CODE 6350–01–P

DEPARTMENT OF HEALTH AND HUMAN SERVICES

Office of the Secretary

45 CFR Part 160

[CMS–0010–IFC]

RIN 0938—AM63

Civil Money Penalties: Procedures for Investigations, Imposition of Penalties, and Hearings—Extension of Expiration Date

AGENCY: Office of the Secretary, HHS.

ACTION: Final rule.

SUMMARY: An interim final rule establishing procedures for the imposition, by the Secretary of Health and Human Services, of civil money penalties on entities that violate standards adopted by the Secretary under the Administrative Simplification provisions of the Health Insurance Portability and Accountability Act of 1996 (HIPAA) was published on April 17, 2003. The interim final rule expires on September 16, 2004. This regulatory action extends the expiration date one year to avoid the disruption of ongoing enforcement actions while HHS proceeds with rulemaking to develop a more comprehensive enforcement rule.

DATES: Effective September 15, 2004, the expiration date of 45 CFR part 160, subpart E is extended from September 16, 2004, to September 16, 2005.

FOR FURTHER INFORMATION CONTACT: Karen Shaw, (202) 205–0154.

SUPPLEMENTARY INFORMATION:

I. Background

On April 17, 2003, the Secretary of Health and Human Services published an interim final rule with request for comments. 68 FR 18895. The interim final rule adopted rules of procedure for the imposition by the Department of Health and Human Services (HHS) of civil money penalties on entities that violate standards and requirements adopted by HHS under the Administrative Simplification provisions of the Health Insurance Portability and Accountability Act of 1996 (HIPAA), Public Law 104–191. These rules are codified at 45 CFR part 160, subpart E (subpart E).

As corrected at 68 FR 22453 (April 28, 2003), subpart E expires on September 16, 2004. HHS intends to propose in the near future a rule to establish complete procedural and substantive provisions for the enforcement of the HIPAA rules through the imposition of civil money penalties. The final rule that will result from this forthcoming rulemaking will supersede subpart E. However, as additional time is needed to complete the rulemaking, HHS has decided to extend the expiration date of subpart E from September 16, 2004 to September 16, 2005.

II. Comments on Subpart E

The April 17, 2003 interim final rule requested comment, and HHS received 19 public comments during the public comment period. We will describe and respond to those comments in the preamble to the forthcoming proposed rule.

III. Procedural Requirements

A. Determination To Issue Final Rule Extending Expiration Date Without Notice and Comment, To Be Effective in Less Than 30 Days

As noted, HHS expects to propose a rule to amend subpart E in the near future. However, this forthcoming rulemaking will not be completed by September 16, 2004, when the interim final rule that adopted subpart E is scheduled to expire. The resulting hiatus in the procedures for civil money penalty enforcement actions could

create confusion for both the public and HHS with respect to enforcement during this period. Thus, HHS hereby extends the expiration date of subpart E by one year. This action is being taken under HHS's authority at 42 U.S.C. 1302(a) and 1320d-6.

Notwithstanding this extension, HHS fully expects to issue the final rule that will result from the forthcoming rulemaking as soon as possible rather than at or near the new September 16, 2005 expiration date. However, a one-year extension should provide HHS with a period sufficient to avoid another extension, should unexpected circumstances delay the regulatory development process.

The Administrative Procedure Act generally requires agencies to provide advance notice and an opportunity to comment on agency rulemakings. However, there are certain exceptions to this requirement. As the preamble to the April 17, 2003 interim final rule explained, subpart E sets out—

> the procedures for provision by the agency of the statutorily required notice and hearing and procedures for issuing administrative subpoenas. Such provisions are exempted from the requirement for notice-and-comment rulemaking under the ''rules of agency * * * procedure, or practice'' exemption at 5 U.S.C. 553(b)(3)(A).

68 FR 18897. Since this regulatory action does no more than extend the effectiveness of a rule that itself was not required to be issued through notice-and-comment rulemaking, the extension of the rule likewise comes within the exemption of 5 U.S.C. 553(b)(3)(A). Accordingly, we do not request comment on the extension.

We have also determined that good cause exists to waive the requirement of publication 30 days in advance of the rule's effective date under 5 U.S.C. 553(d)(3). Since subpart E is already in effect, no useful purpose would be served in delaying the effective date of this action, as those entities who are subject to subpart E are already on notice of its terms. Making this extension effective on less than 30 days notice accordingly will not impose a burden upon anyone. In addition, to the extent that a delayed effective date occasioned a hiatus in the effectiveness of subpart E, it could cause the confusion that the extension seeks to avoid. Accordingly, we find good cause under 5 U.S.C. 553(d)(3) for not delaying the effective date of this action.

B. Review Under Procedural Statutes and Executive Orders

We have reviewed this final rule under the following statutes and executive orders governing rulemaking procedures: the Unfunded Mandates Reform Act of 1995, 2 U.S.C. 1501 *et seq.*; the Regulatory Flexibility Act, 5 U.S.C. 601 *et seq.*; the Small Business Regulatory Enforcement Fairness Act of 1996, 5 U.S.C. 801 *et seq.*; the Paperwork Reduction Act, 44 U.S.C. 3501 *et seq.*; Executive Order 12866 (Regulatory Planning and Review), as amended by Executive Order 13258; and Executive Order 13132 (Federalism). Since this rule merely extends the expiration date of subpart E, the information in the compliance statements that we published on April 17, 2003 with the existing rule continues to apply.

List of Subjects in 45 CFR Part 160

Administrative practice and procedure, Computer technology, Electronic transactions, Employer benefit plan, Health, Health care, Health facilities, Health insurance, Health records, Hospitals, Investigations, Medicaid, Medical research, Medicare, Penalties, Privacy, Reporting and record keeping requirements, Security.

Dated: August 6, 2004.

Tommy G. Thompson,

Secretary.

[FR Doc. 04–20842 Filed 9–13–04; 10:15 am]

BILLING CODE 4120–01–P

FEDERAL COMMUNICATIONS COMMISSION

47 CFR Parts 1 and 25

[IB Docket No. 02–34; FCC 04–92]

Space Station Licensing Rules and Policies

AGENCY: Federal Communications Commission.

ACTION: Final rule, announcement of effective date.

SUMMARY: The Commission adopted rule revisions to extend mandatory electronic filing to all satellite and earth station applications. Certain rules contained new or modified information requirements and were published in the **Federal Register** on August 6, 2004. This document announces the effective date of these published rules. 47 CFR 25.110, 25.114, 25.115, 25.116, 25.117, 25.118(a), 25.130, 25.131, 25.154.

DATES: The revisions to §§ 25.110, 25.114, 25.115, 25.116, 25.117, 25.118(a), 25.130, 25.131, and 25.154, published at 69 FR 47790, August 6, 2004, became effective August 24, 2004.

FOR FURTHER INFORMATION CONTACT: Steven Spaeth, Satellite Division, International Bureau, at (202) 418–1539.

SUPPLEMENTARY INFORMATION: On August 24, 2004, the Office of Management and Budget (OMB) approved the information collection requirement contained in §§ 25.110, 25.114, 25.115, 25.116, 25.117, 25.118(a), 25.130, 25.131, and 25.154, pursuant to OMB Control No. 3060–0678.

Accordingly, the information collection requirement contained in these rules became effective on August 24, 2004.

Federal Communications Commission.

Marlene H. Dortch,

Secretary.

[FR Doc. 04–20786 Filed 9–14–04; 8:45 am]

BILLING CODE 6712–01–P

FEDERAL COMMUNICATIONS COMMISSION

47 CFR Parts 22 and 24

[WT Docket No. 01–108; DA 04–2590]

Year 2000 Biennial Regulatory Review—Amendment of Part 22 of the Commission's Rules To Modify or Eliminate Outdated Rules Affecting the Cellular Radiotelephone Service and Other Commercial Mobile Radio Services

AGENCY: Federal Communications Commission.

ACTION: Final rule; correction.

SUMMARY: The Federal Communications Commission published in the **Federal Register** of April 1, 2004, a document relating to the resolution of Petitions for Reconsideration filed in the Commission's part 22 Cellular Biennial Regulatory Review proceeding in WT Docket No. 01–108, which incorrectly indicated that a new or modified information collection exists that requires approval by the Office of Management and Budget (''OMB''), and contained an incorrect DATES section. The effective date for the document (69 FR 17063) is corrected to read: **DATES:** Effective June 1, 2004. This document corrects the **DATES** section of the April 1, 2004 document.

DATES: Effective June 1, 2004.

FOR FURTHER INFORMATION CONTACT: Linda C. Chang, Federal Communications Commission, Wireless Telecommunications Bureau, 445 12th St., Washington, DC 20554, (202) 418–0620.

SUPPLEMENTARY INFORMATION: The FCC published a document in the **Federal Register** of April 1, 2004, (69 FR 17063) relating to the resolution of petitions for reconsiderations filed in the Commission's Part 22 Cellular Biennial

Regulatory Review proceeding. In FR Doc. 04–6822, published in the **Federal Register** of April 1, 2004, the document incorrectly indicated that a new or modified information collection exists that requires approval by the Office of Management and Budget (''OMB''), and contained an incorrect **DATES:** section. This document corrects the **DATES** section to read: **DATES:** Effective June 1, 2004.

Dated: September 9, 2004.

Linda C. Chang,

Associate Division Chief, Mobility Division.

[FR Doc. 04–20784 Filed 9–14–04; 8:45 am]

BILLING CODE 6712–01–P

FEDERAL COMMUNICATIONS COMMISSION

47 CFR Part 73

[DA 04–2670; MM Docket No. 02–335; RM–10545]

Radio Broadcasting Services; Coopersville, Hart and Pentwater, MI

AGENCY: Federal Communications Commission.

ACTION: Final rule.

SUMMARY: This document denies a Petition for Reconsideration filed by Fort Bend Broadcasting Company directed to the *Report and Order* in this proceeding. *See* 69 FR 8334, February 24, 2004. With this action, the proceeding is terminated.

DATES: Effective September 15, 2004.

FOR FURTHER INFORMATION CONTACT: Robert Hayne, Media Bureau (202) 418–2177.

SUPPLEMENTARY INFORMATION: This is a synopsis of the *Memorandum Opinion and Order* in MB Docket No. 02–335 adopted September 1, 2004, and released September 3, 2004. The full text of this decision is available for inspection and copying during normal business hours in the FCC Reference Information Center at Portals II, CY–A257, 445 12th Street, SW., Washington, DC. The complete text of this decision may also be purchased from the Commission's copy contractor, Best Copy and Printing, Inc., 445 12th Street, SW., Room CY–B402, Washington, DC 20554, telephone 1–800–378–3160 or *www.BCPIWEB.com.* The Commission will not send a copy of this *Memorandum Opinion and Order* pursuant to the Congressional Review Act, *see* 5 U.S.C. 801(a)(1)(A), because this document denied the petition for reconsideration.

Federal Communications Commission.

John A. Karousos,

Assistant Chief, Audio Division, Media Bureau.

[FR Doc. 04–20788 Filed 9–14–04; 8:45 am]

BILLING CODE 6712–01–P

DEPARTMENT OF TRANSPORTATION

National Highway Traffic Safety Administration

49 CFR Part 571

[Docket No. NHTSA 2004–19032]

RIN 2127–AG36

Federal Motor Vehicle Safety Standards; Power-Operated Window, Partition, and Roof Panel Systems

AGENCY: National Highway Traffic Safety Administration, DOT.

ACTION: Final rule.

SUMMARY: This final rule amends our standard for power-operated windows, partitions, and roof panel systems to require that switches for these windows and other items in new motor vehicles be resistant to accidental actuation that causes those items to begin to close. The purpose of this amendment is to reduce the number of injuries and fatalities to people, especially children, that occur when they unintentionally close those power-operated items on themselves by accidentally leaning against or kneeling or standing on the switch or when other occupants accidentally actuate the switch in that manner.

There are simple, effective and inexpensive manufacturing solutions that vehicle manufacturers can use to meet the requirements of this final rule. Vehicle manufacturers could comply by shielding or recessing their switches or by designing them so that pressing on them in the manner described above will not cause these windows and other items to begin to close.

Although they need not do so, manufacturers may choose instead to address the problem through the use of more advanced technology. Manufacturers that install power-operated windows, partitions or roof panel systems meeting the automatic reversal requirements of the standard need not comply with the requirements of this final rule.

In this document, the agency is also denying two petitions for rulemaking requesting that the agency require power windows in new vehicles to be equipped with an automatic reversal system or other anti-entrapment feature.

DATES: *Effective Date:* The amendment made in this final rule is effective November 15, 2004.

Compliance Date: This final rule becomes mandatory for all vehicles manufactured for sale in the U.S. on or after October 1, 2008. Voluntary compliance is permitted before that date.

Petitions: If you wish to submit a petition for reconsideration for this rule, your petition must be received by November 1, 2004.

ADDRESSES: Petitions for reconsideration should refer to the docket number above and be submitted to: Administrator, Room 5220, National Highway Traffic Safety Administration, 400 Seventh Street, SW., Washington, DC 20590.

See the **SUPPLEMENTARY INFORMATION** portion of this document (Section X; Rulemaking Analyses and Notice) for DOT's Privacy Act Statement regarding documents submitted to the agency's dockets.

FOR FURTHER INFORMATION CONTACT: For non-legal issues, you may call Mr. Michael Pyne, Office of Crash Avoidance Standards (Telephone: 202–366–2720) (Fax: 202–366–4329).

For legal issues, you may call Mr. Eric Stas, Office of the Chief Counsel (Telephone: 202–366–2992) (Fax: 202–366–3820).

You may send mail to these officials at National Highway Traffic Safety Administration, 400 Seventh Street, SW., Washington, DC 20590.

SUPPLEMENTARY INFORMATION:

Table of Contents

I. Executive Summary
II. Background
  A. Requirements of FMVSS No. 118
  B. Power Window Switches in Motor Vehicles
III. Petitions for Rulemaking
  A. The Moore Petition
  B. The Little Petition
  C. Center for Auto Safety Petition
IV. Notice of Proposed Rulemaking and Public Comments
  A. The NPRM
  B. Public Comments on the NPRM
V. Post-Comment Period Developments
VI. Summary of the Safety Problem
VII. The Final Rule
  A. Decision To Move to Final Rule
  B. Summary of the Requirements
  C. Effectiveness of New Switch Requirements
  D. Test Device and Methodology
  E. Orientation and Placement of Switches
  F. Automatic Reversal
VIII. Denial of Petitions for Rulemaking
IX. Methods of Compliance
X. Lead Time and Compliance Date
XI. Benefits
XII. Costs
XIII. Rulemaking Analyses and Notices

I. Executive Summary

This final rule amends Federal Motor Vehicle Safety Standard No. 118, *Power-Operated Window, Partition, and Roof Panel Systems,* to add a requirement for new vehicles that will make switches for those systems resistant to accidental actuation, particularly by children.[1] These amendments to the standard apply to passenger cars, multipurpose passenger vehicles, and trucks with a gross vehicle weight rating (GVWR) of 4,536 kg (10,000 lbs.) or less.[2]

Available information indicates that a small, but persistent problem of injuries and fatalities are occurring when vehicle occupants (particularly young children) unintentionally close power windows on themselves or other occupants when they accidentally actuate power window switches by leaning against or kneeling or standing on them. Although these power window incidents are generally low-frequency events, averaging about 1.5 deaths per year in recent years (1999–2002), there is a higher incidence in some individual years (*e.g.*, five deaths of this type were recorded in 1998, and a similar number have been reported in 2004).

These tragic incidents continued to occur despite other safeguards in the standard (*i.e.*, requirement in S4 that power windows will only operate when the key is in the ignition [3] or when the presence of an adult can be presumed for some other reason, *e.g.*, the key has been removed, but neither vehicle front door has been opened since the removal of the key).

Research has led the agency to conclude that switch design is related to such injuries. In the accidental actuation incidents for which the type of switch is known, virtually all of the vehicles involved had ''rocker'' and ''toggle'' switches, which are much more prone to accidental actuation as compared to pull up-push down type switches that must be lifted to close the window.[4] If the accidental pressure of a knee, foot or elbow actuated a pull up-push down switch, it would cause the window to open, not close. Rocker and toggle switches are also much more prone to accidental actuation if they are not shielded or recessed so that they cannot readily be contacted by a foot, knee or elbow.

Accordingly, the agency has decided to amend FMVSS No. 118 by adding a new paragraph S6, specifying that power window switches in new motor vehicles subject to the standard must pass an accidental actuation test that uses a test device simulating a child's knee. The test device is a hemisphere with a smooth, rigid surface and a radius of 20 mm ± 1 mm. When the test device is applied with a force not to exceed 135 Newtons (30 lbs.) to any switch or the housing surrounding a switch that can be used to close a power-operated window, partition, or roof panel, such application must not cause the window, partition, or roof panel to begin to close.

The accidental actuation test in S6 does not apply to switches that are both roof-mounted and incapable of ''one-touch'' closure. In addition, they do not apply to power-operated systems that meet the automatic reversal requirements of S5 of the Standard. We note that while a number of vehicles have automatic reversal systems, we are not aware of any that are certified to meet the requirements of S5. However, we believe that exclusion from the accidental actuation test in S6 would be appropriate for any such systems, because either inadvertent actuation would not occur or entrapment would be prevented by the system.

We believe that the accidental actuation test in S6 provides a simple and effective means of evaluating power window systems and will enhance the protection of people, especially children, thereby furthering NHTSA's mission of preventing motor vehicle-related deaths and injuries. We estimate that, on average, at least one child fatality and one serious injury (*e.g.*, brain damage from near suffocation) per year could be prevented by the requirements of this final rule. The agency believes that this estimate is conservative because, in making our estimate, we excluded cases in which more than one child was in the vehicle (because both inadvertent switch actuation and intentional switch actuation are possible causes of the injury in those cases) and cases in which the type of switch was unknown. If further information on these cases were available, it might indicate that the estimated benefits should be higher.

There are simple, effective, and inexpensive manufacturing solutions that vehicle manufacturers can use to meet the requirements of this final rule. Vehicle manufacturers could comply by shielding or recessing their switches or by designing them so that pressing on them in the manner described above will not cause these windows and other items to close. Many vehicles already incorporate those solutions.

Although they need not do so, manufacturers may choose to address the problem through more advanced technology. Manufacturers need not comply with the new requirement if they use power-operated windows, partitions or roof panel systems meeting the automatic reversal requirements of the standard.

All new light vehicles produced on or after October 1, 2008, for sale in the U.S. must comply with the amended power window switch requirements in this final rule. The agency believes that this four-year lead time will allow manufacturers to incorporate the required changes into their vehicles in accordance with their normal production cycles. As a result, the cost impacts of this rule should be close to zero.

Further, this document denies two petitions for rulemaking requesting that the agency mandate the installation of automatic reversal systems that comply with the requirements of S5 in all new vehicles. We have reached this decision because much of the potential benefit that might be provided by those systems will instead be provided by the accidental actuation test. Further, while the cost of better switches will be negligible, the cost of automatic reversal systems is significant.

II. Background

Requirements of FMVSS No. 118

Federal Motor Vehicle Safety Standard (FMVSS) No. 118, *Power-Operated Window, Partition, and Roof Panel Systems,* regulates power-operated windows, partitions, and roof panels by specifying requirements to

[1] We note this rulemaking does not address incidents in which one occupant intentionally operates the switch by hand and either knowingly or unknowingly entraps another person.

[2] For the sake of simplicity, the preamble to this final rule collectively refers to these three types of systems—power windows, interior partitions, and power roof panels (sunroofs)—as ''power windows,'' all of which are covered by FMVSS No. 118. Power roof panels and partitions are similar to power windows in their operation. However, any distinctions in applicability among the three types of systems will be delineated clearly in both the preamble and the amended regulatory text.

[3] In adopting that provision, the agency reasoned that the key would normally be in the ignition only if the driver were still in or near the vehicle, and thus in a position to supervise the operation of the vehicle windows.

[4] ''Rocker'' switches are designed to pivot on a center hinge, effectively operating like a ''see-saw.'' ''Toggle'' switches operate using small levers that push back and forth to open and close a window. As a result of their design, downward pressure (*e.g.*, caused by a child kneeling or leaning) on a rocker or toggle switch could result in a window's either opening or closing, depending upon how such force is applied.

In contrast, ''push-pull'' switches function such that pressing down on the switch will only cause the window to open, but the switch must be actively pulled up in order to close the window. Thus, accidental pressing with a hand, knee or foot on a push-pull switch could not cause a window to close, although it might cause it to open.

reduce the likelihood of death or injury from their accidental operation. As a matter of particular concern, the standard addresses the threat to unsupervised children of being strangled or suffering limb-crushing injuries by closing power windows. The standard applies to passenger cars, multipurpose passenger vehicles, and trucks with a gross vehicle weight rating (GVWR) of 4,536 kg (10,000 lbs.) or less.

When the standard was first adopted, it required that activation of power windows be linked to the vehicle's ignition lock. The standard prohibited activation of power windows unless the vehicle's ignition was turned to the ''On,'' ''Start,'' or ''Accessory'' position. The agency presumed that making the presence of the ignition key a precondition to power window activation would help ensure that a driver would be present to provide adult supervision and also would provide a simple means of disabling the power windows in a parked vehicle (*i.e.*, key removal).

Since its initial adoption, FMVSS No. 118 has undergone periodic revision in order to accommodate technological developments related to power window systems. For example, the standard has been amended to permit power windows to close in certain situations in which the key is not in the ignition, but the existence of adult supervision could be presumed for other reasons (*see* section S4 of FMVSS No. 118).

In the most recent rulemaking, which was in 1991, NHTSA responded to the interest of manufacturers in offering remote controls for window closing (*see* 56 FR 15290 (April 16, 1991)). When amending the standard, the agency was mindful that the unrestricted allowance of remote controls, especially ones that activated windows using radio frequency signals that can penetrate obstructing walls, could pose a danger to child occupants because the person activating the window might not be able to see a child in the window opening. Therefore, to help ensure the proximity of a supervising person, the agency amended the standard to permit power windows to be operable through the use of remote controls only if the controls had a very limited range (*i.e.*, not more than 6 meters (m) (20 ft)). A longer range, up to 11 m (36 ft), was permitted for controls that were operable only if there were an unobstructed line of sight between the control and the vehicle.

Another condition enumerated in section S4 allows power windows to operate in the interval after ignition key removal but before either front door of the vehicle is opened. Another condition allows windows to close by use of a key lock on the outside of the vehicle. Windows are also permitted to close if they initially are open only 4 mm (0.16 in) (*i.e.*, to facilitate closing of doors on a vehicle with an air-tight occupant compartment).

Section S5 makes an exception to the allowable conditions for power window operation listed in section S4 if the vehicle is equipped with an automatic reversal or ''anti-entrapment'' feature that complies with specified operational force levels. In adopting this exception, the agency reasoned that the provisions permitting remote control of a power window need not be premised on the likely proximity of supervision, if the window closing system itself could sense the child's hand or head when it became trapped between the window and the window frame, and thereupon stop and reverse to release the child. Therefore, the agency established a provision permitting power windows equipped with an automatic reversal system to be closed in any manner (*e.g.*, with or without a key) desired by the manufacturer. It also permitted remote controls of unrestricted range, as well as new products (*e.g.*, devices to open and close windows automatically in response to heat and rain), if there is an automatic reversal system.

However, we note here that the present rulemaking action was deemed necessary because deaths and serious injuries involving power windows continue to occur, despite the safeguards already incorporated in the standard. The complete success of the earlier safeguards is dependent on children not being left unattended in vehicle, or, if they are, on removal of the ignition key. However, power window injuries and fatalities are occurring in cases where children were left alone in vehicles with keys in the ignition. These tragic injuries and loss of life could have been prevented if a supervising adult had removed the key from the ignition, but the persistent recurrence of such incidents involving children have led us to the conclusion that the additional protections set forth in this rulemaking are necessary.

Power Window Switches in Motor Vehicles

Prior to the amendments contained in this final rule, FMVSS No. 118 has not regulated the switches provided in motor vehicle occupant compartments for operating power windows. In vehicles equipped with power windows, those switches generally are of three types: (1) ''Rocker'' switches, (2) ''toggle'' switches, and (3) ''push-pull'' switches.

Power windows with rocker switches, which are very common in current motor vehicles, are particularly susceptible to inadvertent closure because almost any contact with the switch can cause the window to operate. Power windows with toggle switches are similarly susceptible to inadvertent actuation.

In contrast, power windows operated by push-pull (fishhook-style) switches are considered resistant to inadvertent closure because incidental contact with those switches will not readily cause a window to begin to close, although it may cause a window to open. Only by actively pulling upwards on push-pull switches is it possible to operate such windows in the closing direction.

Protection from inadvertent actuation of power windows also may depend on switch location and orientation in a vehicle. For example, a rocker switch that is set into a recess on a vertical door panel is inherently less susceptible to casual contact by occupants, especially a child standing or kneeling on a door armrest while being partially extended outside of the open window, than is a switch mounted flush on a horizontal surface. Likewise, console-mounted switches for sunroofs are very susceptible to inadvertent actuation as compared to switches located on the vehicle's headliner, because a child attempting to look out of an open sunroof would very likely stand on the console to do so.

III. Petitions for Rulemaking

The Moore Petition

On September 26, 1995, Michael Garth Moore, an attorney in Hilliard, Ohio, submitted a petition for rulemaking [5] to NHTSA requesting that the agency amend FMVSS No. 118 in two areas. First, the petitioner asked the agency to require that all power windows be equipped with an anti-entrapment safety feature, so that a vehicle's windows would stop and reverse direction if they were to encounter an obstruction while closing.

In his petition, Mr. Moore stated that automatic reversal technology is of proven effectiveness and is economically feasible for mandatory installation. The petitioner further stated that, while it was difficult to determine the magnitude of child injuries and fatalities related to power windows, the prevention of even one

[5] Docket No. NHTSA–2004–17216–21. (The original docket number for this rulemaking was Docket No. NHTSA–96–117. However, with the advent of NHTSA's electronic docketing system, available at *http://dms.dot.gov/*, all relevant materials discussed in this notice have also been included in Docket No. NHTSA–2004–17216.)

catastrophic incident warranted action, given the minimal costs associated with such a requirement.

However, the agency denied that request primarily because of its high cost, and for other reasons associated with the limitations of force-sensing automatic reversal systems (discussed in further detail subsequently).

Second, the petitioner requested that the agency modify FMVSS No. 118 to prevent the inadvertent closure of power windows by requiring manufacturers to protect switches from unintended operation either by shielding them or by placing them in a less accessible location (*e.g.*, in a recess in a door panel). In addition, Mr. Moore asked that manufacturers be required to design switches such that ''downward pressure on any control can only cause the window/partition/roof panel to open,'' thereby preventing inadvertent closure. The petitioner argued that such a requirement would protect a child left in a vehicle with its ignition enabled, because the child would no longer be at risk of inadvertently closing a power window merely by kneeling or standing on a power window switch.

NHTSA granted that portion of the Moore petition related to safer power window switches. Accordingly, the agency initiated rulemaking on this topic, as discussed in further detail below.

The Little Petition

On January 13, 2003, David W. Little, an attorney in Oklahoma City, Oklahoma, submitted a petition for rulemaking [6] to NHTSA requesting essentially the same rulemaking actions contained in the Moore petition. Mr. Little represented the families of five victims of power window accidents, and he petitioned the agency on behalf of the Zoie Foundation. The Little petition sought to amend FMVSS No. 118 to require that all new U.S. vehicles be equipped with automatic reversal systems and with power window switches that are resistant to inadvertent actuation.

To supplement his petition, Mr. Little provided a ''sampling'' of cases, including various records such as death certificates, coroners' reports, and police investigation reports for five instances of children either severely injured or killed by power windows. In addition, the petitioner provided news articles, copies of comments to NHTSA's public docket, and manufacturers' information on automatic reversal systems (*e.g.*, information from Brose and Omron). The Little petition also included a listing of consumer complaints through February 1996 from NHTSA's Office of Defects Investigation (ODI) database, which reported 107 power window complaints; twelve of these complaints involved entrapment, out of about 350,000 total consumer complaints. These complaints included some severe injuries (*e.g.*, limb amputation) and fatalities, several of which involved children.

We decided to address the Little petition in this document.

The Center for Auto Safety Petition

On August 19, 2003, a coalition of petitioners consisting of the Center for Auto Safety (CAS), Public Citizen, Kids and Cars, Advocates for Highway and Automotive Safety, the Consumer Federation of America, Consumers for Auto Reliability and Safety, the Zoie Foundation, and the Trauma Foundation, submitted a petition for rulemaking [7] (hereinafter referred to as the CAS petition) to NHTSA requesting essentially the same rulemaking actions contained in the earlier Moore and Little petitions.

The CAS petition discussed the history of the agency's power window rulemaking in some detail, and it included a list of 33 fatalities (all children) killed in power window accidents since FMVSS No. 118 first took effect in 1971. In its petition, CAS stated, ''More power window deaths have been recorded in the last two years than in any other two-year period since 1971.'' CAS claimed that the rate of power window accidents has increased as power windows have proliferated, stating that the 18 fatalities recorded in the last seven years are more than the 15 fatalities recorded over the previous 25 years. CAS provided data indicating that power window installations on North American-produced vehicles numbered 1.9 million in 1971 (19.2 percent of the market), but grew to 7.9 million (62 percent of the market) in 1994.

In support of its requests, CAS mentioned a 1997 NHTSA technical report that extrapolated from 10 actual cases of power window-related injuries and estimated that annually, there are 499 power window-related incidents nationwide that result in emergency room visits.[8] That report included incidents of both inadvertent and intentional actuation of power window switches. The report found that most of these injuries were minor (*i.e.*, 91% of those injured persons were treated and released without hospitalization), and none of the actual 10 cases involved a fatality.

The CAS petition also argued that with an automatic reversal system in place, defects in power windows could be prevented from becoming deadly. Petitioners provided the example of three child fatalities associated with a defect case involving Model Year 1982–1986 Jeep Wagoneers, which, in certain cases, the failure of a key-operated switch on the tailgate caused the tailgate windows to close uncontrollably. The CAS petition argued that injuries and fatalities in the Wagoneer cases could have been prevented, had the vehicles been equipped with power window automatic reversal systems.

The CAS petition also suggested that other power-operated features, such as power sliding doors on minivans, are similarly likely to proliferate. Accordingly, CAS and the other petitioners urged NHTSA to be proactive in this area by establishing safety performance standards to protect children from entrapment and injury.

In addition, the CAS petition argued that automatic reversal technology for power windows is both available and sufficiently inexpensive to be mandated in new vehicles. The petition cited a letter from Nartron Corp. estimating the cost for a proprietary anti-entrapment automatic reversal system using capacitive sensing technology to be $12.50 per vehicle window. The CAS petition analogized the technology for power window automatic reversal systems to that which the Consumer Product Safety Commission (CPSC) has required on residential garage door-closing systems since 1991. CAS stated that the CPSC standard was later upgraded in 1993 and now requires automatic garage door to have two types of sensors to prevent bodily entrapment (*e.g.*, pressure sensors on their leading edge and ''electronic eyes'').[9]

We decided to address the CAS petition in this document.

IV. Notice of Proposed Rulemaking (NPRM) and Public Comments

The NPRM

On November 15, 1996, NHTSA published a notice of proposed rulemaking (NPRM) in the **Federal Register** (61 FR 58504) proposing to amend FMVSS No. 118 to require each power-operated window, interior partition, and roof panel in a motor vehicle to be equipped with a switch designed so that contact by a form

[6] Docket No. NHTSA–2004–17216–20.

[7] Docket No. NHTSA–2004–17216–19.

[8] ''Injuries Associated With Specific Motor Vehicle Hazards: Radiators, Batteries, Power Windows, and Power Roofs,'' (DOT 808 598) (July 1997) (Docket No. NHTSA–2004–17216–29).

[9] *See* 16 CFR Part 1211 (CPSC Safety Standard for Automatic Residential Garage Door Operators).

representing a child's knee would not cause inadvertent closure.

As noted previously, in the NPRM, the agency denied the Moore petition's request to require that all power windows be equipped with an automatic reversal feature. NHTSA concluded that such a requirement would be unreasonably expensive (*i.e.*, costing approximately $100 per window or $400 per vehicle) and not practicable with the technology (*i.e.*, force-sensing) then in existence (*e.g.*, such devices prevent reliable window closure in the presence of snow, ice, and even the friction of cold or tight weather stripping). The reasoning for the agency's denial of the request for an automatic reversal requirement was explained in detail in the NPRM (*see* 61 FR 58504, 58505–06).

However, the agency decided to grant the petitioner's request to initiate rulemaking to amend FMVSS No. 118 in other ways (*e.g.*, shielding switches and using switches that, if accidentally leaned on, would open, not close windows) to provide additional protection from inadvertent closure of power windows. At the time of the NPRM, NHTSA recognized the potential safety problem raised in the Moore petition and had collected a number of anecdotal reports of power window injuries and fatalities. In light of the anticipated safety benefits associated with remedying this problem, NHTSA decided to issue an NPRM proposing new switch requirements. Specifically, the agency proposed that if a switch used to close a power-operated window is contactable by a rigid spherical ball 25 mm (1 inch) in diameter, pressing that ball in a nondestructive way against the switch in any direction must not cause the window to begin to close. A 25 mm (1 inch) ball was considered by the agency to be generally representative of the bent knee of a child under the age of six.

The agency proposed this amendment for several reasons, as explained in the NPRM. First, the agency stated its belief that the proposed requirements would offer a safety benefit in reducing the number of fatalities and injuries resulting from inadvertent closure of power windows. The information available to NHTSA demonstrated that such injuries were occurring, and children's natural curiosity, coupled with the ongoing problem of children being left unsupervised in vehicles, suggested that the problem would be likely to continue absent regulatory intervention.

Further, the agency expressed its belief in the NPRM that the proposed requirement would be practicable and would result in very little cost burden on vehicle manufacturers, particularly if sufficient lead time were provided. The required switch modifications could be achieved merely by changing the shape of the switches and/or the surrounding housing and would not affect any other aspects of the operation of the power windows. In addition, the agency noted in the NPRM that several major vehicle manufacturers already had incorporated push-pull switches or recessed switches across all or some of their model lines.

Public Comments on the NPRM

Overview

Comments on the NPRM were received from 14 entities, including a consumer advocacy group, trade associations, automobile manufacturers, a manufacturer of power window equipment, and a law firm, as well as one individual.[10]

Commenters expressed an array of views on the NPRM, ranging from support to opposition. Commenters opposing the proposed amendment claimed that the agency had not conducted a sufficiently methodical effort to quantify the alleged safety problem or to identify the types of switches involved in the few known cases of death or serious injury. Generally, these commenters argued that existing safety measures (*i.e.*, requiring keys to be in the ignition in order for the power windows to operate) are adequate. They also stated that most vehicles also have a driver-controlled lock-out for at least the rear windows, if not all the windows. In addition, these commenters argued that the agency had not provided evidence to demonstrate that the proposed switch requirements would achieve the desired goal of preventing power window entrapment incidents.

Specific Comments

Justification for the Regulation

AAMA, AIAM, Volkswagen and Mercedes commented that neither the petitioner nor the agency had provided any data demonstrating a safety need for the NPRM's proposed requirements, particularly when NHTSA itself had acknowledged that manufacturers were voluntarily developing and implementing design changes consistent with the agency's regulatory goals. Mercedes also argued that the proposed regulatory language is overly broad and too vague to address the alleged safety problem. Further, Mercedes questioned whether the agency had any data to show that push-pull switches are also not susceptible to inadvertent actuation by children and suggested that the agency should conduct additional research. For all these reasons, Mercedes argued that the proposal could not be justified in its present form.

Volvo's comments acknowledged that an improved design of power window switch to make them safer against inadvertent closure could provide some added protection to children left unattended in vehicles. However, Volvo also questioned whether regulation is necessary, in light of the trend toward installation of recessed or lift-up switches and the effects of market forces.

AAMA commented that the agency has not investigated any of the reported incidents of power window injury discussed in the NPRM to determine whether the proposed regulatory changes would have prevented the reported injuries.

The comments of Mr. Flanagan, an individual, expressed a contrary view, stating that the agency should concentrate very seriously on enacting regulations that would require push-down/pull-up power window switches. Mr. Flanagan asserted that such action would eliminate the overwhelming majority of inadvertent power window switch activation resulting in serious child injuries.

Test Objectivity

Advocates for Highway and Auto Safety expressed concern that the test procedures for the proposed amendments to FMVSS No. 118 were not objective. Specifically, Advocates stated that the rigidity of the test ball was not specified, that the term ''nondestructive'' was not defined, and that no force level was specified for pressing the 25 mm (1 inch) ball against the switch. Mercedes commented that the phrase ''in a non-destructive manner'' in the regulatory language is meaningless and unenforceable.

Volvo suggested using an alternative test device similar to one used in Economic Commission for Europe

[10] Comments were received from: (1) Advocates for Highway and Auto Safety (Advocates); (2) American Automobile Manufacturers Association (AAMA); (3) Association of International Automobile Manufacturers (AIMA); (4) BMW of North America, Inc. (BMW); (5) Ford Motor Company (Ford); (6) American Honda Motor Co., Ltd. (Honda); (7) Mitsubishi Motors R&D of America, Inc. (Mitsubishi); (8) Mercedes-Benz of North America, Inc. (Mercedes); (9) Nissan North America, Inc. (Nissan); (10) Toyota Technical Center USA, Inc. (Toyota); (11) Volkswagen of America, Inc. (Volkswagen); (12) Volvo Cars of North America, Inc. (Volvo); (13) Brose North America, Inc. (Brose); (14) Libbey & Suddock, P.C.; and (15) Mr. Thomas P. Flanagan. All comments and other correspondence discussed in this notice are available under Docket No. NHTSA–2004–17216.

Regulation No. 21,[11] European Union (EU) Council Directives 74/60/EEC[12] and 78/632.[13] (These European standards are identical with regard to the test device suggested by Volvo.) However, Volvo recommended a reduction in the radius of that device from 60 mm (2.4 inch) (as shown in Annex 7 of ECE Regulation No. 21) to 25 mm (1 inch).

Size of the Test Ball

Some commenters raised the issue of whether the size of the proposed test ball was appropriate. Specifically, Advocates questioned whether a test ball 25 mm (1 inch) in diameter would account for inadvertent switch operation as a result of pressure from a child's elbow, suggesting that a smaller size would be more representative.

In contrast, the AAMA argued that the agency had not provided adequate evidence to suggest that the 25 mm (1 inch) diameter rigid test ball appropriately represents the knee or ''flat softer tissue'' of the foot, arm, or leg, of a child under the age of six. AAMA also stated that such a small diameter test device could necessitate switch designs that would pose operational difficulties for persons with a limited range of motion in their hands or fingers (*e.g.*, occupants with arthritis or even long fingernails), or with a gloved hand.[14] According to AAMA, such persons may have difficulty operating recessed, shielded, or pull-type switches, a situation that may distract from the primary driving task and put vehicle occupants at higher risk of being injured in a crash.

Volvo commented that a 25 mm (1 inch) diameter is too small for the test ball to be representative of the bent knee of a child, suggesting that 50 mm (2 inches) would be more representative. According to Volvo, even some designs of lift-up switches might fail in certain test directions if a 25 mm (1 inch) test ball were used, due to the fact that a certain amount of space is required around the switch to allow a proper grip for fingers.

Exclusions

Some commenters (BMW, Mitsubishi, Volvo) suggested that vehicles equipped with an automatic reversal system that meets the requirements of S5 should be excluded from the proposed requirements related to switches. BMW stated that this approach would afford manufacturers design flexibility without degrading the level of protection for occupants in unsupervised conditions.

Comments from BMW and Toyota also argued that the agency should exclude from the new requirements any power window switch that could be locked out or disabled by the driver.

Toyota commented that the proposed new requirements should not apply to any switches that can be reached from the front seat by a 5th-percentile female, arguing that the proposal is too strict and would unnecessarily limit design flexibility. Toyota argued that it is unnecessary to impose the proposed requirements on switches that can easily be observed and reached by the driver (*e.g.*, switches in the front passenger compartment), because the driver would be able to provide the necessary supervision of those switches' operation.

Several commenters (Nissan, Mitsubishi, Mercedes, Volvo, Volkswagen) commented that the agency should exclude sunroof systems from the proposed requirement in cases where the switch is mounted in the vertical interior roof lining, because there is virtually no chance that a child's knee or foot could activate such a switch. Nissan stated that it does not use a ''one-touch'' closure feature and that its roof panel switches do not function without the ignition key or if the key is in the ''Off'' or ''Accessory'' position.

Other commenters, such as Honda, argued that the proposed requirements should not apply to switches installed on approximately vertical surfaces. Honda also stated that switches on a console located on the centerline of the vehicle between the front seats should be excluded from the proposed requirements, because a small child would not have sufficient reach to activate such controls and still be in the path of the window. More generally, Honda recommended that the agency should consider excluding from the standard's switch requirements those switches where the distance between the switch and the window it operates is so great that a person could not simultaneously actuate the switch and be in a position with the potential for entrapment. Honda did not provide any data in support of its proffered proximity-based exclusion.

Automatic Reversal Systems

Some commenters questioned the agency's decision to not propose to require automatic reversal systems on new vehicles equipped with power windows. For example, Advocates stated that NHTSA had not substantiated that automatic reversal systems are ''unreasonably costly'' and had not attempted to analyze the costs and benefits of such systems. Brose, a manufacturer of automatic power window reversal systems, stated that the agency's estimate of consumer costs for such systems, approximately $100 per window, overestimates the actual cost, which Brose expected would be approximately half of that figure.

In addition, Advocates challenged the agency's statement that automatic reversal technology falls short of desirable performance, in that ice, snow, and even friction caused by cold or tight weather stripping can prevent window closure. Advocates pointed to the Cadillac Catera, a vehicle equipped with an automatic reversal system, as proof that such systems are capable of reliable operation and may prevent injuries.

Brose stated that the pinch force-sensing automatic reversal systems it produces are able, in most cases, to differentiate adverse environmental influences (*e.g.*, ice) from occupant entrapment situations and that they can do so reliably for the life of the vehicle. Brose also stated that automatic reversal systems may be active when subject to variable closure conditions, rather than operating only in the ''express-up'' mode, and that such systems also are available on rear side windows to protect children.

Lead Time

Vehicle manufacturers generally commented that they would require adequate lead time to incorporate the new switch requirements in their production processes. Mitsubishi stated that it would require a four-year lead time to implement the further design work necessary to comply with the requirements in the proposed rule. Mercedes commented that the lead time for any such rule should be at least five years, in order to reduce its cost impact. Toyota and Volkswagen each stated that the necessary modifications to its

[11] Uniform Provisions Concerning the Approval of Vehicles With Regard to Their Interior Fittings (ECE R21).

[12] On the Approximation of the Laws of the Member States Relating to the Interior Fittings of Motor Vehicles (Interior Parts of the Passenger Compartment Other Than the Interior Rear-View Mirrors, Layout of Controls, the Roof or Sliding Roof, the Backrest and Rear Part of the Seats) (74/60/EEC).

[13] Adapting to Technical Progress Council Directive 74/60/EEC On the Approximation of the Laws of the Member States Relating to the Interior Fittings of Motor Vehicles (Interior Parts of the Passenger Compartment Other Than the Interior Rear-View Mirrors, Layout of Controls, the Roof or Sliding Roof, the Backrest and Rear Part of the Seats) (78/632/EEC).

[14] Although it did not provide a source for the information, AAMA stated that existing data indicate that the average size of a 95th-percentile male's finger at the first knuckle is 22.8 mm (0.9 inch). AAMA argued that when this dimensional value is coupled with an average glove tolerance of 5–7 mm (0.20–0.28 inch), the 25 mm (1 inch) testing diameter is rapidly exceeded.

vehicles could be made with a lead time of three years.

V. Post-Comment Period Developments

As noted in the NPRM, NHTSA has periodically received reports from lawyers, doctors, and the public describing deaths and serious injuries of unattended children in power window accidents. Additional incident reports were provided as part of the Moore petition and in public comments (Libbey & Suddock). These incidents occurred despite the fact that power window operation in these vehicles was tied directly to the ignition locking system. Such reports strongly suggested to the agency that additional requirements were needed to protect children.

Injuries Associated With Power Windows

Data obtained since the NPRM confirms the existence of an ongoing problem at a national level. In March 2000, NHTSA responded to questions from some commenters on the NPRM about the justification for the rulemaking by undertaking a review of death certificates from the 50 U.S. States for calendar year 1997. As part of that review, the agency examined three types of non-crash accidents related to motor vehicles, including child (age 10 or younger) fatalities related to vehicle windows. This study was augmented with a search for relevant news articles in the Lexis-Nexis™ database, both to confirm cases found in death certificates and to identify additional cases from 1997 and later years.

The study looked at the issue of child fatalities in power window incidents generally, including any fatalities involving vehicle power windows, to obtain an overview of the problem.

A final report, which was published in May 2002,[15] states that in 1997, four deaths of children were associated with vehicle windows, and in two of those cases, it was possible to identify the window system in question as being a power-operated one. In all of those cases, the victims were very young children (three three-year-olds and one four-year-old).

In order to confirm the pattern of injuries discussed above, NHTSA supplemented this research with a similar review of death certificates for calendar year 1998 and updated the Lexis-Nexis™ search. The resulting report, which was published in May 2004,[16] yielded the following information.

The results of the review of the 1998 death certificate data were similar to the earlier findings. Four child deaths were recorded as a result of interaction with a vehicle window. Of the four cases, two were identified as involving a power-operated window. In the third case, it was not possible to identify from the death certificate whether the window involved was power-operated, and in the fourth case, no window movement took place, so whether the window was power-operated was not relevant. Victims in those cases were ages two, three (two cases), and six.

As discussed in the second NHTSA report, the results of the updated Lexis-Nexis™ search identified 11 child deaths and one injury for calendar years 1998–2002 associated with vehicle windows (one of these deaths involved a sunroof). We concluded that power-operated windows or sunroofs caused nine of the deaths and the one injury. In two cases, it was not possible to identify whether the windows involved in the incident were power-operated. Except for one six-year-old, all of the victims were either age two or three.

These data also indicate that the annual incidence rate for power window-related fatalities involving children is, on average, in the low single digits. However, with such a low rate of occurrence, the number of cases may fluctuate (spike or ebb) in any single year, without necessarily signaling a trend or a generalized change in circumstances.[17]

Estimate of Injuries Preventable by Safer Switches

The potential benefits attributable to safer switches are limited to power-window incidents resulting from inadvertent actuation. In some cases, however, it is not possible to determine whether a power-window incident resulted from inadvertent or intentional operation of the power window switch.

None of the deaths mentioned in the previous section that may have involved inadvertent actuation involved power windows controlled by pull-up, push-down switches. Thus, they were potentially preventable by safer switches.

As discussed later in this document, in the section titled ''Benefits,'' we conservatively estimate that, on average, safer switches could prevent at least one child fatality and at least one serious injury per year.

Estimate of Injuries Potentially Preventable by Automatic Reversal Systems

There is an overlap between the target population for this final rule and the target population of the automatic reversal system requirement sought by petitioners. As noted previously, the target population for this final rule consists of persons killed or injured by inadvertent actuation of power window switches. The target population of the automatic reversal system requirement sought by petitioners is larger, but only slightly, consisting of persons killed or injured by either intentional or inadvertent actuation of those switches. Based on the data, discussed above, on the number of deaths identified as involving a power-operated window, we believe that in the absence of this final rule, an automatic reversal system requirement might prevent at least two fatalities per year. (We are unaware of any deaths caused by a power window with an automatic reversal feature.) Given the issuance of this final rule, the benefit of an automatic reversal system requirement would be reduced to the prevention of at least one fatality per year.

VI. Summary of the Safety Problem

We believe that the design of power window switches is influential in incidents in which power windows result in death or injury. Specifically, we believe that rocker and toggle switches are more susceptible to inadvertent operation, because even incidental contact (*e.g.*, a slight bump or nudge of the switch) can cause the window to begin to close. In contrast, by making it necessary to install either recessed/shielded switches or push-pull switches, injuries and fatalities are likely to be significantly reduced because accidental switch contact would not occur or would not cause window closure.

Some commenters argued that push-pull switches might not resolve the problem of inadvertent activation. The agency notes that because power window accidents typically are not witnessed, there will always be a measure of uncertainty as to whether a child inadvertently actuated an exposed rocker or toggle switch, resulting in a window-closing injury or fatality. It is theoretically possible, as some commenters argued, that some of the

[15] ''NHTSA Pilot Study: Non-Traffic Motor Vehicle Safety Issues,'' NHTSA (May 6, 2002) (Docket No. NHTSA–2004–17216–27).

[16] ''Data Collection Study: Deaths and Injuries Resulting From Certain Non-Traffic and Non-Crash Events,'' NHTSA (May 2004) (Docket No. NHTSA–2004–17216–28).

[17] A spike has reportedly occurred this year in power window deaths. This situation is similar to one that the agency encountered with trunk entrapment cases. In a three-week period in the summer of 1998, 11 children died in several trunk entrapment cases.

children may have closed windows on themselves by actuating power windows in the normal way (*i.e.*, using fingers to actuate the switch). In such cases, switch redesign could not have prevented those accidents.

We note that pulling up a switch to close a window is an operation requiring a conscious decision to perform. A person cannot accidentally press against a push-pull switch and cause a window to begin to close. Therefore, inadvertent actuation and entrapment with push-pull type switches are unlikely events. Thus, we continue to believe that switch design is a major factor in the identified injuries and fatalities associated with inadvertent power window actuation.

We note that there are other scenarios in which power windows may cause death or injury. In some cases involving two children playing in a vehicle, one child may intentionally activate the power window switch (as the switch was functionally intended to operate) with the unintentional effect of entrapping the other child. In other cases, a driver may be distracted and close a power window on a child whose head is in the window opening. The present rulemaking, which focuses on power window switch designs that are resistant to inadvertent actuation, would not prevent those cases, some of which stem from driver distraction or insufficient adult supervision. In such cases, no particular switch design would prevent the relevant injuries or fatalities, although automatic reversal systems might be an effective, although very costly countermeasure.

VII. The Final Rule

Decision To Move to a Final Rule

Although there has been a longer than usual interval between the NPRM and the resulting final rule, we have decided to move directly to a final rule for several reasons. First, more recent data confirm an ongoing problem of injuries and fatalities related to the inadvertent actuation of power window switches. The nature and extent of that problem have not changed drastically since the time of the NPRM. We note that while there has been an increase in the use of shielded or recessed switches or push-pull switches since the NPRM, we would not necessarily expect a gradual increase in the use of these switches to track with changes in the number of fatalities, given the rare, sporadic nature of these events.

Second, the technology that we expect to be used to comply with the final rule is essentially unchanged since the NPRM. The shielded or recessed switches and push-pull switches of today are similar to the ones at the time of the NPRM.

Third, as indicated above, there has been an increasing trend among vehicle manufacturers to equip vehicles with shielded or recessed switches or push-pull switches. We expect those vehicles to meet the requirements of the standard, particularly given the increase in the diameter of the test device specified in this final rule, as compared to the device in the NPRM. This final rule is thus consistent with a safety solution already being implemented in the marketplace. Our final rule will accelerate this trend and ensure that all light vehicles comply.

Fourth, other than relatively minor technical changes, the requirements of this rulemaking are largely the same as presented in the NPRM. Coupled with adequate lead time, we expect implementation of any necessary changes to be relatively simple and of *de minimis* cost. We expect that such changes would be accomplished during the normal vehicle redesign process.

For these reasons, we do not see any significant possibility that obtaining further public comment would change the information before this agency. Accordingly, we have decided that it is in the public interest to proceed at this time to issue a final rule.

Summary of Requirements

After carefully considering the comments on the proposed rule and other available information, we have decided to amend FMVSS No. 118 by adding a new section S6, which specifies requirements for power window switches in passenger cars, multipurpose passenger vehicles, and trucks with a GVWR of 4,536 kg (10,000 lbs.) or less. These requirements apply to switches that are located in the occupant compartment of those vehicles and control the closing operation of power-operated windows, partitions, and roof panels.

The provisions of S6 specify that power window switches must meet new performance requirements when tested using a test device consisting of a hemisphere with a smooth, rigid surface and a radius of 20 mm ± 1 mm. The device reasonably represents the knee of a small child (2–3 years old). When the test device is applied with a force not to exceed 135 Newtons (30 lbs.) to any switch (or in the case of shielded or recessed switches, to the shielding/housing of any switch with the force directionally applied in a manner that, if unimpeded, would make contact with the switch) in the vehicle occupant compartment that can be used to close a power-operated window, partition, or roof panel, such application must not cause the window, partition, or roof panel to begin to close. The force is applied to the geometric center of and perpendicular to the flat surface of the hemisphere. While applying a force in the specified range, the hemisphere may be in contact with any part of the actuation device (switch) (or of the switch shielding/housing) at any angle.

The requirements of S6 do not apply to switches that are both roof-mounted and not capable of ''one-touch'' closure. In addition, power-operated systems that meet the automatic reversal requirements of S5 are also excluded from the requirements of S6.

We believe that the test requirement set forth in section S6 provides a simple and practicable means of evaluating power window systems so as to provide enhanced protection of children. Accordingly, this final rule furthers NHTSA's mission of preventing motor vehicle-related deaths and injuries.

The following provides more in-depth discussion of the standard's new requirements and rationale related to switches for power-operated windows, partitions, and roof panels, including a response to public comments.

Effectiveness of the New Switch Requirements

Our examination of the existing data on injuries and fatalities associated with inadvertent actuation of power windows not only aided us in defining the nature and extent of the safety problem, but it also contributed to the identification of the remedy included in this final rule. As discussed below, the agency's research indicated the types of power window switches that are most susceptible to inadvertent actuation, as well as those most resistant to inadvertent actuation.

Among the fatalities identified in the agency's research reports, which consider only cases in which a child was left alone in the vehicle with no sibling or other person present in the vehicle and in which the vehicle model and type of switch were identified, there were a total of nine fatalities in the last ten calendar years (*i.e.*, calendar year 1994 or later) caused by closing power windows. As noted above, none of those nine cases involved vehicles with push-pull type switches.

Further, there are several complaints documented in NHTSA's Vehicle Owner Questionnaire (VOQ) database related to power-operated windows.[18]

[18] A search of this database may be conducted by accessing *http://www-odi.nhtsa.dot.gov/cars/problems/complain/complaintsearch.cfm* and entering the appropriate terms.

In a few of those cases, it was apparent that adults observed a child closing a vehicle window by kneeling or standing on the power window switch (and at least one case of a dog observed doing the same). None of the involved switches were of a push-pull design.

These data indicate both the mode of action of most power window-related incidents (*i.e.*, kneeling or standing on switches), as well as the types of switches that are most susceptible to inadvertent actuation (*i.e.*, rocker and toggle switches).[19] The same information also indicates that push-pull type switches provide superior protection against inadvertent actuation. As noted above, the design of push-pull switches require a more conscious effort to effectuate window closure (*i.e.*, active pulling with a finger rather than inadvertent contact).

The Japan Automobile Manufacturers Association (JAMA) has acknowledged the importance of careful switch design. Although we believe that its recommendation does not go far enough, the following statement by JAMA underscores the need for the present rulemaking:

> Switches should be constructed so that they are less prone to incorrect operation, taking into account the extent of their projection and configuration in relation to the surrounding area. If the switch for closing a window is installed on a plane whose angle is within 30 degrees from the horizontal plane, it should not be a ''see-saw'' type or push-type switch.[20]

We do not believe that the switch requirements contained in this final rule will negatively impact normal, intentional operation of the windows, such as operation in the dark or operation with gloved hands. We also believe that switches designed to conform to the standard will be easy to operate and will not distract drivers. We note that there are many vehicle models currently being sold in the U.S. that would already meet the requirement of this final rule, so the suggestion that compliant power window switch designs would pose operability problems, as alleged, does not appear to be valid in light of current production.

Thus, although inadvertent operation comprises only a very small percentage of overall usage, we expect that a safety benefit could be realized through relatively simple switch redesigns that would not compromise normal operation. Consistent with the above, we believe that a requirement resulting in either push-pull switches or recessed switches resistant to inadvertent actuation would eliminate the vast majority of incidents of the type reflected in the data.

Test Device and Methodology

(1) Shape of the Test Device

In the NRPM, we proposed that the shape of the test device would be a sphere.

As previously discussed, one commenter (Volvo) suggested the use of an alternative device similar to one specified in ECE Regulation No. 21 and EU Directives 74/60 and 78/632. Those documents relate to interior fittings in motor vehicles generally, including power window switches.[21]

Volvo suggested using the shape and proportions of the ECE test device, but scaling it down to child size by reducing its edge radius from 60 mm (2.4 inches) as shown in Annex 7 of ECE Reg. No. 21 (which approximates the size of an adult knee) to 25 mm (1 inch), which Volvo stated is the size of a child's knee.

The resulting test device suggested by Volvo is depicted in a figure attached to Volvo's comment.[22] The device is in the shape of a rounded triangle of 50 mm (2 inches) thickness, with rounded edges of 25 mm (1 inch) radius. The rounded vertex of the triangle—the part that would be in contact with a power window switch during testing—is effectively a sphere with a 50 mm (2 inches) diameter.

Because the shape of the critical feature of the test device suggested by Volvo closely resembles that of a simple sphere, we believe that the test device specified in this final rule is similar to the one suggested in Volvo's comment and has the added benefit of simplicity, since only radius and surface characteristic must be specified. Accordingly, we have retained the spherical shape of the test device as part of this final rule.

However, in order to simplify the application of the test device in actual testing, we have decided to utilize a hemisphere, rather than a full sphere. This will permit attaching of a rod to the flat surface of the hemisphere for easier maneuvering of the test device during a test. Only the spherical surface of the test device will be used for contacting the switch or switch housing during testing.

(2) Size of the Test Device

In the NPRM, we proposed that the test device would have a diameter of 25 mm (1 inch).

Commenters expressed divergent views as to the appropriate size of the test device. Some commenters, such as Advocates, questioned whether a sphere with a 25 mm (1 inch) diameter would be too large to be effective in minimizing potential power window activation by means other than fingers (with special attention drawn to children's elbows). Other commenters, such as AAMA, stated that a test device with a 25 mm (1 inch) diameter would be too small, possibly restricting switch use by persons with decreased dexterity or gloved hands. Volvo recommended a device whose relevant surface had the equivalent of a 25 mm (1 inch) radius (50 mm (2 inches) diameter).

In order to determine the appropriate size for the test device, the agency also examined anthropomorphic data submitted to the docket by General Motors.[23] The GM submission indicates that the average width of the legs of children (ages 2 to 3½), measured at the knee, is 66 mm (2.5 inches) and that the minimum measurement among 212 children within that age range was approximately 53 mm (2.1 inches). Those figures are corroborated by Volvo's estimated child knee width of 50 mm (2 inches) and by data contained in a 1976 NHTSA research report,[24] which found knee breadth of 66 mm (2.6 inches) for a three-year-old.

Based upon these data alone, a test sphere of approximately 50 mm (2 inches) in diameter seems appropriate. However, other factors lead us to believe that the test sphere should have a somewhat smaller diameter. First, the agency's research indicates at least one confirmed case of a power window fatality involving a child less than two years of age (22 months). Second, the measurements provided by GM are of the overall width of the leg measured at the knee. However, the kneecap itself is smaller than that dimension, even for a bent knee.

[19] Available data do not indicate whether those rocker and toggle switches involved in power window-related incidents were shielded or recessed. However, we believe that to be unlikely.

[20] Docket No. NHTSA–2004–17216–23.

[21] We note that the EU adopted Directive 2000/4/EC in February 2000. (Amending Council Directive 74/60/EEC on the Approximation of the Laws of the Member States Relating to the Interior Fittings of Motor Vehicles (Interior Parts of the Passenger Compartment Other Than the Interior Rear-View Mirrors, Layout of Controls, the Roof or Sliding Roof, the Backrest and Rear Part of the Seat) (Directive 2000/4/EC). In essence, the new directive incorporated requirements similar to those in FMVSS No. 118 and also included the following requirement related to power window switches: ''Switches * * * shall be located or operated in such a way to minimise [sic] the risk of accidental closing.'' However, the Directive does not provide any additional performance requirements for those switches.

[22] Docket No. NHTSA–2004–17216–11.

[23] Docket No. NHTSA–2004–17216–22.

[24] ''Development and Evaluation of Masterbody Forms For Three-year and Six-year Old Child Dummies,'' (DOT HS 801 811) (Docket No. NHTSA–2004–17216–31).

Further, we believe that inclusion of a compliance margin is appropriate to ensure that the new requirements address a wide variety of circumstances. Inadvertent actuation of power windows occurs in vehicles with switches of various shapes and sizes, mounted in a variety of locations and orientations, and involves children of different ages and sizes. Body surfaces may interact with and activate switches in a variety of ways. Too large a test device might lead to switches that are susceptible to inadvertent operation in foreseeable but unproven circumstances, such as by elbow contact.[25]

For the above reasons and after considering all available information, we have decided to adopt a hemisphere with a radius of 20 mm ± 1 mm (0.8 inch). We have selected this dimension because we believe it is a reasonable representation of the predominant size and shape of a small child's knee, with a compliance margin appropriate for the circumstances. As to the alleged problem of operating power window switches with gloved hands or by persons with limited finger dexterity, we are not aware of any significant problem in current vehicles that incorporate either recessed switches or switches with a push-pull design. However, we believe that the increased size of the test device in this final rule should eliminate any such concerns.

(3) Surface of the Test Device

The NPRM did not provide detail as to the surface of the test device, other than to state that the device would be a ''rigid spherical ball.'' [26] Commenters stated that the agency should provide additional specificity in this regard in order to increase objectivity.

We agree that further clarification is appropriate, and we have modified the regulatory text as follows. Our experience with different test device sizes and types indicates that rotation of the test sphere as it is pressed against a switch under test influences whether the switch can resist actuation. We also found that a ball with a relatively high level of surface friction exacerbated the effect of ball rotation. For these reasons, we have decided to specify that the test device be rigid and have a smooth surface, in order to limit the effect of rotation.

(4) Application of the Test Device

As discussed above, some commenters argued that the agency's proposal was not objective because it did not specify of level and direction of force to be applied to the test sphere. Instead, the NPRM stated that the test ball would contact the switch in ''any non-destructive manner.'' [27]

In response to concerns raised about the objectivity of the how the test device will be applied to the switch, we have decided to specify a level of force for application of the test device as part of the test procedure. For the following reasons, we have decided that the test device is to be applied with a force not to exceed 135 Newtons (30 lbs.), which is applied to the geometric center of and perpendicular to the flat surface of the hemisphere. While applying this force level, the hemisphere may be in contact with the switch at any angle. For shielded or recessed switches, the same test device and range of force are used at any angle to attempt to make contact with the switch. In such cases, the test device is directionally applied in such a manner that, if unimpeded, contact would be made with the actuation device.

As the standard does not contain a strength requirement for power window switches, our goal in selecting a force level was not to determine whether switches could withstand relatively high force levels. In addition, we note that power window switches normally actuate under force levels on the order of several ounces.

As noted above, we based our decision as to the appropriate size of the test device on the dimensions of the knee of small children (2–3 years old). Therefore, in the interest of consistency in selecting the force to be applied to the test device, we have decided that it is appropriate to use a force consistent with the weight (30 lbs.) of a 2-year-old to 3-year-old child.

We believe that 135 Newtons (30 lbs.) of force is consistent with the weight of the majority of children involved in power window-related incidents and would test the resistance of switches to inadvertent actuation in the closing direction without imposing any requirement for switch durability.[28] Although most power window switches in isolation may actuate at lower force levels, the force specified in this final rule will preclude shielding/housing around shielded or recessed switches that deforms to such an extent that inadvertent actuation of the switch becomes possible.

We expect all existing vehicle power window switches would be sufficiently robust as to withstand this maximum force when applied during testing.[29] If a switch were to break during testing, it would not be a noncompliance under the standard, provided that breakage did not cause the window to begin to close.

Orientation and Placement of Switches

With the exception of roof-mounted switches not capable of ''one-touch'' activation, this final rule does not exclude window switches from the standard's requirements based on location or orientation of the switch. Even switches mounted on vertical surfaces could be unintentionally contacted, resulting in inadvertent window closure. We do not believe the standard's requirements will impose unreasonable design restrictions on manufacturers. As previously noted, push-pull switches or shielded/recessed switches are already incorporated in many vehicles, and they are used in various locations and orientations.

However, after reviewing the available information, we have decided to exclude certain ceiling-mounted switches (*e.g.*, switches located in an overhead console) from the new switch performance requirements of the standard because they are not susceptible to inadvertent actuation. There is no feasible way for an occupant to stand or kneel on overhead switches while leaning out of an open window or sunroof, as may occur with switches mounted in other locations.

Nonetheless, an overhead switch is only excluded from the requirements set forth in this final rule, if such switch requires continuous pressure to close the window or sunroof. Switches with a ''one-touch'' capability, even if they are mounted overhead, pose an elevated risk because they can set a window or sunroof in motion, even if they are actuated only momentarily and then

[25] Examination of the relevant data does not reveal any cases in which inadvertent elbow contact was identified as the cause of a power window injury or fatality. Instead, most cases involved a child kneeling or standing on a power window switch. Furthermore, from a logistical standpoint, we believe that it would be extremely rare for inadvertent elbow contact to result in entrapment. Accordingly, our calculations to determine the size of the test sphere focused on dimensions of children's knees, rather than elbows.

[26] 61 FR 58504, 58507.

[27] *Id.*

[28] According to statistics provided by the Society for Automotive Engineers (SAE), the 95th-percentile weight for children ages 19–24 months was 13.8 kg (approximately 30 lbs.). *See* ''Anthropometry of U.S. Infants and Children,'' Society of Automotive Engineers (SAE) SP–394 (1975) (Instructions on how to view a copy of this document are provided at Docket No. NHTSA–2004–17216–26).

This value is also representative of the weight of an average three-year-old. Therefore, the selected force closely approximates the weight of the majority of children who were most frequently involved in incidents of inadvertent power window actuation.

[29] The agency recently conducted informal tests of power window switches from six 2004 vehicles, some outside the vehicle and some inside the vehicle. There did not appear to be any breakage even when 445 Newtons (100 pounds) of force was applied to these switches.

released. Therefore, overhead switches are excluded from the requirements of this final rule only if they require continuous actuation for the window or sunroof to continue closing.

Several commenters requested the exclusion of switches located at a relatively large (''stand-off'') distance from the window or sunroof that they control (*e.g.*, center console-mounted switches controlling rear vent windows in minivans). The underlying rationale for this request is that because an occupant (particularly a child) would not be large enough to span the distance between such a switch and the window/sunroof opening, there would not be any way for that person to lean against the switch while in a position in which that person is in danger of becoming entrapped.

After considering this suggestion, we have decided not to exclude switches based upon their distance from a window or sunroof for the following reasons. First, the interiors of motor vehicles are, in general, not very large compared to the length/height of children, particularly when children are reaching with outstretched limbs. Based upon available data, we estimate that the height of a 95th-percentile six-year-old is approximately four feet.[30] The same publication lists the lower arm length for the 95th-percentile six-year-old as just over one foot. If this length is added to the height measurement, it gives a reasonable approximation of the maximum distance that a child can reach with an outstretched arm (*i.e.*, 5 feet). Although we have not received any data regarding what would constitute a safe stand-off distance, we believe that it would have to be at least four to five feet. Although there may be some switches operating windows beyond this distance (*e.g.*, back vent window in minivans), we have concluded that in most other cases, as long as switches are located in placements that are reasonable for normal operation, they are unlikely to be sufficiently out of reach of the windows and sunroofs they control to make inadvertent actuation impossible.

Second, there have been a limited number of cases in which two children were left in a vehicle, and one of the children was strangled by a power window. In those cases, it is not always clear which child actuated the power window switch and whether such actuation was intentional or unintentional. Nonetheless, we do not believe that it is appropriate to exclude such switches from the final rule's requirements, since unintentional actuation of a power window switch by one child could result in a fatality to another child, the basic mechanism of injury is the same, and associated costs are negligible.

In addition, we are not adopting commenters' suggestion to exclude vehicles with a power window lock-out feature from the requirements of the final rule. Unlike an automatic reversal system that can be expected to operate at all times, there is not any guarantee that a power window lock-out feature will be used in all or even many cases. In addition, on at least some vehicle models, the lock-out feature does not disable the driver's window switches, and in other models, it only disables the rear window switches. Consequently, we believe that window lock-out features are not sufficiently protective to substitute for improved switch designs.

Automatic Reversal

Automatic Reversal Systems at the Time of the NPRM

In the NPRM, NHTSA addressed the Moore petition's request for the agency to mandate automatic reversibility. As discussed above, we concluded then that such a feature would be too costly to be mandated on all new light vehicles, that the then existing technology was insufficient to provide the desired safety performance and that it would not be practicable to redesign such systems to provide that performance and at the same time retain the ability to close under certain common environmental conditions. Therefore, the agency denied the Moore petition's request related to an automatic reversal requirement, based upon the following reasoning.

At the time of the 1996 NPRM, the only type of automatic reversal systems available for broad application utilized force-sensing technology. The agency estimated the cost for such systems to be approximately $100 per window, which translated to $400 for a vehicle with four power windows. The petitioner did not provide any information to substantiate his claim that automatic reversal systems were not unreasonably expensive.

In the NPRM, the agency also identified certain functional problems with such systems that cast doubt on their efficacy in addressing the problem of power window caused injuries and fatalities. The agency determined that the then available automatic reversal technology could not reliably close vehicle windows in the presence of snow or ice, or even the friction of cold or tight window seals. As a result, the automatic reversal capability was active only during one touch ''express-up'' window operation. It was overridden during the normal closure mode (*i.e.*, when the power window switch was continuously held in the window closing position). Automatic reversal technology of that type and capability would not have prevented window closure from occurring when occupants stood, knelt, or leaned on power window switches.

One commenter on the NPRM (Advocates) argued that some vehicles then available in the U.S. market (*e.g.*, Cadillac Catera) were equipped with an automatic reversal system that they presumed met the pinch force protection requirements of S5 of the standard. However, we do not know if the system in those vehicles actually met those requirements. We believe that none of those vehicles was certified under FMVSS No. 118 as complying with S5. Instead, they were certified under S4, which provides that the power windows operate only when the ignition key is in the ''On,'' ''Start,'' or ''Accessory'' position (or in other specified, permissible positions).

Automatic Reversal Systems Today

Since the NPRM, the agency has received two additional petitions for rulemaking (*i.e.*, the 2003 petitions from Little and CAS) requesting that we require automatic reversal systems on all new vehicles equipped with power windows.

Although there has been improvement in the technology for force sensing automatic reversal systems since the NPRM (*e.g.*, a Brose system using an electric current-sensing technique that causes a closing window to reverse automatically in the normal operation mode as well as express mode), we believe that these systems still might not meet the requirements of S5 relating to protection of very small appendages, such as a child's fingers. We base this belief upon the fact that force-detecting reversal systems on vehicles now being sold in the U.S.[31] were generally designed to meet a German performance requirement,[32] under which power windows are limited to 100 N of pinch force; however, the requirement permitted the window to move a

[30] *See* ''Anthropometry of U.S. Infants and Children,'' Society of Automotive Engineers (SAE) SP–394 (1975) (Instructions on how to view a copy of this document are provided at Docket No. NHTSA–2004–17216–26).

[31] The agency believes that all automatic reversal systems on vehicles currently being sold in the U.S. use force-sensing technology.

[32] Road Traffic Act (Germany), No. 60, paragraph 30 STVZO (Guidelines for power-operated windows of passenger vehicles) (1983) (Docket No. NHTSA–2004–17216–25). The German requirement was absorbed into the EU standard in 2000.

considerable distance (several millimeters) before reaching a force level high enough to trigger reversal. This European requirement has not changed since the NPRM. Consequently, systems designed to satisfy the requirement might not protect small fingers as effectively as systems certified to meet S5 of FMVSS No. 118.

Recently, new technology has become available which could address some of the shortcomings noted in the NPRM regarding the then existing force-sensing systems. For example, in its petition, CAS discusses a non-contact automatic reversal system produced by Nartron Corporation, which uses a capacitive sensing [33] technology to provide automatic reversal. Such newer automatic reversal systems appear to have addressed earlier concerns regarding the systems' reliability in terms of closing when the weather stripping is very cold or when ice is present. It appears that with these improvements, it may be feasible for such systems to comply with the requirements of S5.

However, the cost per vehicle of these systems is significant. According to CAS, the Nartron system has a cost of $12.50 per window, or $50 per vehicle. Available information suggests that all production-ready automatic reversal systems (*i.e.*, ones based on force-sensing) average approximately $8 to $10 per window ($32 to $40 per vehicle).

In addition, we note that automatic reversal systems based on still other types of technology are under development. One example is a non-contact automatic reversal system of the type developed by Prospects Corporation that uses infrared reflectance technology to sense obstacles, although no cost estimates are available for this system. (Rights to that technology have been licensed to Delphi Corporation.) Non-contact automatic reversal systems have also been developed using light beam interruption technology, but again, no reliable cost figures are available.

In sum, we believe that mandating the installation of these systems on all new light U.S. vehicles would still involve a very high level of cost. As discussed previously, we believe that supplementing this final rule by mandating an automatic reversal system might save one additional life per year, on average. Such a mandate would address those cases where a driver or other vehicle occupant intentionally closes a window while unaware that another occupant is in a position to become entrapped. Given the substantial cost of automatic reversal systems and the fact that this final rule will reduce the limited benefits that could be obtained from those systems, we are denying the requests in the Little and CAS petitions to mandate automatic reversal systems.

VIII. Denial of Petitions for Rulemaking

Response to the Little and CAS Petitions

As discussed above, the Little and CAS petitions request the same regulatory actions that the Moore petition requested be taken related to power-operated window, partition, and roof panel systems. Regarding the request by Little and CAS for the agency to require power window switches that are resistant to inadvertent actuation, the issuance of this final rule renders that request moot. As to the request by Little and CAS that the agency require automatic reversal systems on all new light vehicle equipped with power windows, we deny that request for the reasons discussed above.

IX. Methods of Compliance

As noted above, the methods for compliance with the requirements of this final rule are low in cost and involve simple technology that is largely unchanged since the NPRM. These methods are discussed below.

One way to meet the requirements would be to install push-pull window switches instead of rocker or toggle switches. The cost difference between these switches is negligible.

Another way would be to shield rocker or toggle switches or to recess them in a protective housing built into the armrest, console, or other surface containing the switches so that a child's knee could casually contact the housing, but not the switch.

These designs are being used in increasing numbers of vehicles.

In addition, vehicle manufacturers need not comply with the requirements of this final rule if they equip their power windows with automatic reversal systems that meet the requirements of paragraph S5 of the standard. The number of different technological approaches used in designing automatic reversal systems has increased since the NPRM. Further, their effectiveness has improved, even as their cost has been reduced.

X. Lead Time and Compliance Date

In the NPRM, we proposed that compliance with the amended standard would be required three years after publication of the final rule in the **Federal Register**. We stated in the proposed rule that we intended to provide sufficient lead time to allow vehicle manufacturers to incorporate compliant power window safety switches as part of normal vehicle redesign plans. We believed that providing this lead time would reduce the cost associated with this final rule to essentially zero.

Comments from vehicle manufacturers stated that lead times ranging from three to five years would be necessary, in order to build the required changes into normal product production cycles. After considering the comments and other available information, *e.g.*, the typical vehicle manufacturer production cycles, we have decided to require that all new vehicles produced on or after October 1, 2008, for sale in the U.S. must comply with the amended power window switch requirements in this notice.

This four-year lead time, reflected in the above compliance date, is within the range recommended by vehicle manufacturers in 1996 as to the time required to incorporate the necessary switch design changes into their normal vehicle redesign processes. We recognize, given that the percentage of vehicles equipped with power windows that comply with the requirements of this rule has risen since the NPRM, the overall task of compliance is easier now than it was eight years ago. However, that fact has no bearing on the duration of the redesign process for a particular vehicle model that does not already have compliant switches. As discussed previously, we believe that such lead time is appropriate in order to minimize the costs associated with this rulemaking.

Manufacturers are free to meet the new requirements of FMVSS No. 118 prior to the date for mandatory compliance.

XI. Benefits

Based upon all available information, we believe that, on average, at least one child fatality and at least one serious injury (*e.g.*, amputation, brain damage from near suffocation) per year could be prevented by the requirements of this final rule. We believe that this estimate of safety benefits is conservative, and that the actual benefit is likely higher for two reasons.

First, our estimate counts only cases in which the victim was a child left alone in a vehicle. We excluded several cases because the victim's sibling was also in the car, leading to the possibility that the sibling, and not the victim, operated the window and did so

[33] Capacitive sensing means the detection of an object by the measurement of a disturbance in an electric field.

intentionally. To the extent that these cases involved inadvertent operation of the power window by a second child, the new switch requirements could provide further benefit by preventing actuation.

Second, our estimate counts only cases in which the vehicle make/model was identified so that the type of power window switch was known. Several cases occurred at a time when relatively few U.S. vehicles had push-pull switches. Nevertheless, we decided not to assume that the switches in those cases were either the rocker or toggle type, and instead, we excluded those cases altogether. If further data were available on those cases, the calculated benefits conceivably could increase.

Further, even after NHTSA's methodical survey of death certificates, we found cases in the Lexis-Nexis™ search that did not show up among the death certificates. Likewise, the list of fatalities provided as an attachment to the CAS petition, which represents all of the cases compiled by a national organization dedicated to child safety with cars (Kids and Cars), includes at least one case that is not duplicated in NHTSA's data. The reverse is also true, in that more than one of the cases in NHTSA's study do not appear in the CAS list.

Collectively, these factors suggest that any attempt to determine the size of this problem on a national level will undercount the actual number of incidents and, thus, will result in an under-estimation of the safety benefit.

We also note that the agency's complaint database includes reports of ''near-miss'' incidents. In those cases, an occupant was actually observed inadvertently operating a power window and was saved from entrapment by nearby adults. Had adults not been present, it is likely that the child occupant would have been injured or killed in those cases. Although it is difficult to quantify the number of near-miss incidents, we believe that a significant number of such cases occur but go unreported, because no fatalities or serious injuries were involved. This pool of close calls demonstrates that, although the number of cases in any given year is typically in the single digits, there is potential for the annual figures of deaths and injuries to vary by a factor of two or three. We believe that such reports further demonstrate the potential of switch design changes to avert risk of injury or death.

Further, the agency's experience with other non-crash safety problems exemplifies how a low-frequency type of safety problem can suddenly proliferate. In the case of trunk entrapment, one particular year (calendar year 1998) saw the number of deaths multiply by several times the annual average for that type of incident (*see* 64 FR 70672 (Dec. 17, 1999)). Although it is unlikely that power window incidents will proliferate to an unexpectedly high level, our research identified five power window-related fatalities in 1998 alone, while the average for the other four years studied (1999–2002) was 1.5 deaths per year.

XII. Costs

As stated previously, the agency believed at the time of the NPRM that the proposed requirements would impose very little cost burden on vehicle manufacturers, particularly if ample lead time were provided. Modifications made to comply with the proposal were expected to consist merely of changes in the mode of switch operation and/or in the shape of surrounding trim pieces. The proposal was not expected to affect any other aspects of the operation of power windows.

These initial estimates regarding costs hold for this final rule as well. The cost to manufacturers, while perhaps greater than zero, will be negligible, as any necessary switch modifications will presumably be incorporated during the course of normal product design cycles. NHTSA notes that the commenters did not question those estimates.

Further, several major vehicle manufacturers already have incorporated push-pull switches across all or part of their model lines and thus have already borne the cost of compliance. For example, for the current model year (MY 2004), General Motors has stated that approximately 55 percent of its sales volume in the U.S. incorporates push-pull switches.[34] Although data for the current model year were not provided, Ford stated that it expects 61 percent of its fleet to have re-designed switches by the 2007 model year.[35] DaimlerChrysler stated that four of its 26 model year 2003–2004 vehicle models have push-pull switches.[36] Other Chrysler models employ toggle type switches, some of which may comply with the new requirements depending on how they are situated within the vehicle (*i.e.*, whether they are recessed).

As to import manufacturers, Japanese import manufacturers currently use push-pull type switches in most, if not all, of their U.S. vehicles. While some European import manufacturers use switches that would comply with this final rule, NHTSA does not know the extent of this use. It does know that many of them offer auto-reverse power windows. However, those windows may not qualify for the exception provided in this final rule for power windows that meet the auto-reverse requirements of FMVSS No. 118.

XIII. Rulemaking Analyses and Notices

A. Executive Order 12866 and DOT Regulatory Policies and Procedures

Executive Order 12866, ''Regulatory Planning and Review'' (58 FR 51735, October 4, 1993), provides for making determinations whether a regulatory action is ''significant'' and therefore subject to OMB review and to the requirements of the Executive Order. The Order defines a ''significant regulatory action'' as one that is likely to result in a rule that may:

(1) Have an annual effect on the economy of $100 million or more or adversely affect in a material way the economy, a sector of the economy, productivity, competition, jobs, the environment, public health or safety, or State, local, or Tribal governments or communities;

(2) Create a serious inconsistency or otherwise interfere with an action taken or planned by another agency;

(3) Materially alter the budgetary impact of entitlements, grants, user fees, or loan programs or the rights and obligations of recipients thereof; or

(4) Raise novel legal or policy issues arising out of legal mandates, the President's priorities, or the principles set forth in the Executive Order.

This rulemaking document was not reviewed under E.O. 12866. Further, this action has been determined to be ''not significant'' under the Department of Transportation's Regulatory Policies and Procedures. The amendments to FMVSS No. 118 contained in this final rule would require switch designs that are resistant to inadvertent actuation. However, in light of current industry design trends and the substantial lead time provided, the cost of this final rule is expected to be close to zero. On average, the annual benefits are expected to be a savings of one child's life and the avoidance of at least one serious injury. Therefore, the impacts of these amendments are so minor that a full regulatory evaluation is not required.

B. Regulatory Flexibility Act

Pursuant to the Regulatory Flexibility Act (5 U.S.C. 601 *et seq.*, as amended by the Small Business Regulatory

[34] Docket No. NHTSA–2004–17216–24.

[35] Id.

[36] Id.

Enforcement Fairness Act (SBREFA) of 1996), whenever an agency is required to publish a notice of rulemaking for any proposed or final rule, it must prepare and make available for public comment a regulatory flexibility analysis that describes the effect of the rule on small entities (*i.e.*, small businesses, small organizations, and small governmental jurisdictions). The Small Business Administration's regulations at 13 CFR Part 121 define a small business, in part, as a business entity ''which operates primarily within the United States.'' (13 CFR 121.105(a)). No regulatory flexibility analysis is required if the head of an agency certifies the rule will not have a significant economic impact on a substantial number of small entities. SBREFA amended the Regulatory Flexibility Act to require Federal agencies to provide a statement of the factual basis for certifying that a rule will not have a significant economic impact on a substantial number of small entities.

NHTSA has considered the effects of this final rule under the Regulatory Flexibility Act. I certify that this final rule will not have a significant economic impact on a substantial number of small entities. The rationale for this certification is that the rule does not require use of any specific equipment design (*e.g.*, either push-pull type switches or other types of recessed switches could be used), and the substantial lead time brings costs close to zero.

C. Executive Order 13132 (Federalism)

Executive Order 13132, ''Federalism'' (64 FR 43255, August 10, 1999), requires NHTSA to develop an accountable process to ensure ''meaningful and timely input by State and local officials in the development of regulatory policies that have federalism implications.'' ''Policies that have federalism implications'' are defined in the Executive Order to include regulations that have ''substantial direct effects on the States, on the relationship between the national government and the States, or on the distribution of power and responsibilities among the various levels of government.'' Under Executive Order 13132, the agency may not issue a regulation with Federalism implications, that imposes substantial direct compliance costs, and that is not required by statute, unless the Federal government provides the funds necessary to pay the direct compliance costs incurred by State and local governments, the agency consults with State and local governments, or the agency consults with State and local officials early in the process of developing the proposed regulation. NHTSA also may not issue a regulation with Federalism implications and that preempts a State law unless the agency consults with State and local officials early in the process of developing the regulation.

NHTSA has analyzed this final rule in accordance with the principles and criteria contained in E.O. 13132 and has determined that the rule will not have sufficient Federalism implications to warrant consultations with State and local officials or the preparation of a Federalism summary impact statement. This final rule will not have any substantial effects on the States, or on the current distribution of power and responsibilities among the various local officials.

D. Executive Order 12988 (Civil Justice Reform)

Pursuant to Executive Order 12988, ''Civil Justice Reform'' (61 FR 4729, February 7, 1996), the agency has considered whether this rulemaking will have any retroactive effect. This final rule does not have any retroactive effect. Under 49 U.S.C. 30103, whenever a Federal motor vehicle safety standard is in effect, a State may not adopt or maintain a safety standard applicable to the same aspect of performance which is not identical to the Federal standard, except to the extent that the State requirement imposes a higher level of performance and applies only to vehicles procured for the State's use. 49 U.S.C. 30161 sets forth a procedure for judicial review of final rules establishing, amending, or revoking Federal motor vehicle safety standards. That section does not require submission of a petition for reconsideration or other administrative proceedings before parties may file a suit in court.

E. Executive Order 13045 (Protection of Children From Environmental Health and Safety Risks)

Executive Order 13045, ''Protection of Children from Environmental Health and Safety Risks'' (62 FR 19855, April 23, 1997), applies to any rule that: (1) Is determined to be ''economically significant'' as defined under Executive Order 12866, and (2) concerns an environmental, health, or safety risk that the agency has reason to believe may have a disproportionate effect on children. If the regulatory action meets both criteria, the agency must evaluate the environmental health or safety effects of the planned rule on children, and explain why the planned regulation is preferable to other potentially effective and reasonably feasible alternatives considered by the agency.

Although this final rule is expected to have a positive safety impact on children, it is not an economically significant regulatory action under Executive Order 12866. Consequently, no further analysis is required under Executive Order 13045.

F. Paperwork Reduction Act

Under the Paperwork Reduction Act of 1995 (PRA), a person is not required to respond to a collection of information by a Federal agency unless the collection displays a valid OMB control number. There are not any information collection requirements associated with this final rule.

G. National Technology Transfer and Advancement Act

Section 12(d) of the National Technology Transfer and Advancement Act of 1995 (NTTAA), Public Law 104–113 (15 U.S.C. 272) directs the agency to evaluate and use voluntary consensus standards in its regulatory activities unless doing so would be inconsistent with applicable law or is otherwise impractical. Voluntary consensus standards are technical standards (*e.g.*, materials specifications, test methods, sampling procedures, and business practices) that are developed or adopted by voluntary consensus standards bodies, such as the Society of Automotive Engineers (SAE). The NTTAA directs us to provide Congress (through OMB) with explanations when the agency decides not to use available and applicable voluntary consensus standards. The NTTAA does not apply to symbols.

Currently, there are no voluntary consensus standards directly related to power-operated window switch design. However, NHTSA will consider any such standards as they become available.

H. Unfunded Mandates Reform Act

Section 202 of the Unfunded Mandates Reform Act of 1995 (UMRA) requires federal agencies to prepare a written assessment of the costs, benefits, and other effects of proposed or final rules that include a Federal mandate likely to result in the expenditure by State, local, or tribal governments, in the aggregate, or by the private sector, of more than $100 million annually (adjusted for inflation with base year of 1995). Before promulgating a NHTSA rule for which a written statement is needed, section 205 of the UMRA generally requires the agency to identify and consider a reasonable number of regulatory alternatives and adopt the

least costly, most cost-effective, or least burdensome alternative that achieves the objectives of the rule. The provisions of section 205 do not apply when they are inconsistent with applicable law. Moreover, section 205 allows the agency to adopt an alternative other than the least costly, most cost-effective, or least burdensome alternative if the agency publishes with the final rule an explanation of why that alternative was not adopted.

This final rule will not result in the expenditure by State, local, or tribal governments or the private sector, in the aggregate, or more than $100 million annually. Thus, this final rule is not subject to the requirements of sections 202 and 205 of the UMRA.

I. National Environmental Policy Act

NHTSA has analyzed this rulemaking action for the purposes of the National Environmental Policy Act. The agency has determined that implementation of this action will not have any significant impact on the quality of the human environment.

J. Regulatory Identifier Number (RIN)

The Department of Transportation assigns a regulation identifier number (RIN) to each regulatory action listed in the Unified Agenda of Federal Regulations. The Regulatory Information Service Center publishes the Unified Agenda in April and October of each year. You may use the RIN contained in the heading at the beginning of this document to find this action in the Unified Agenda.

K. Privacy Act

Please note that anyone is able to search the electronic form of all comments received into any of our dockets by the name of the individual submitting the comment (or signing the comment, if submitted on behalf of an association, business, labor union, etc.). You may review DOT's complete Privacy Act Statement in the **Federal Register** published on April 11, 2000 (Volume 65, Number 70; Pages 19477–78), or you may visit *http://dms.dot.gov.*

List of Subjects in 49 CFR Part 571

Imports, Motor vehicle safety, Reporting and recordkeeping requirements, Tires.

■ In consideration of the foregoing, NHTSA is amending 49 CFR Part 571 as follows:

PART 571—FEDERAL MOTOR VEHICLE SAFETY STANDARDS

■ 1. The authority citation for Part 571 of Title 49 continues to read as follows:

Authority: 49 U.S.C. 322, 30111, 30115, 30117, and 30166; delegation of authority at 49 CFR 1.50.

■ 2. Section 571.118 is amended by revising paragraph S2 and by adding paragraph S6 to read as follows:

§ 571.118 Standard No. 118; Power-operated window, partition, and roof panel systems.

* * * * *

S2. *Application.* This standard applies to passenger cars, multipurpose passenger vehicles, and trucks with a gross vehicle weight rating of 4,536 kilograms or less. This standard's requirements for actuation devices, as provided in S6, need not be met for vehicles manufactured before October 1, 2008.

* * * * *

S6. *Actuation Devices.*

(a) Any actuation device that is mounted in the occupant compartment of a vehicle and can be used to close a power-operated window, partition, or roof panel, shall not cause such window, partition, or roof panel to begin to close from any open position when tested in accordance with paragraphs (b) and (c) of S6.

(b)(1) Using a hemisphere with a smooth, rigid spherical surface and a radius of 20 mm ± 1 mm, place the spherical surface of the hemisphere against any portion of the actuation device.

(2) Apply a force not to exceed 135 Newtons (30 lbs.) to the geometric center of and perpendicular (± 3 degrees) to the flat face of the hemisphere.

(3) While this force level is being applied, the plane of the flat face of the hemisphere may be at any angle.

(c) For actuation devices that cannot be contacted by the hemisphere specified in S6(b)(1) prior to the application of force, apply a force up to the level specified in S6(b)(2) at any angle in an attempt to make contact with the actuation device. The hemisphere is directionally applied in such a manner that, if unimpeded, it would make contact with the actuation device.

(d) The requirement in S6(a) does not apply to either—

(1) Actuation devices that are mounted in a vehicle's roof, headliner, or overhead console and that can close a window, partition, or roof panel only by continuous rather than momentary switch actuation, or

(2) Actuation devices for closing power-operated windows, partitions, and roof panels that comply with S5 of this standard.

Issued: September 9, 2004.

Jeffrey W. Runge,

Administrator.

[FR Doc. 04–20714 Filed 9–13–04; 9:30 am]

BILLING CODE 4910–59–P

DEPARTMENT OF TRANSPORTATION

National Highway Traffic Safety Administration

49 CFR Part 571

[Docket No. NHTSA 2004–19076]

RIN 2127–AF83

Federal Motor Vehicle Safety Standards; Power-Operated Window, Partition, and Roof Panel Systems

AGENCY: National Highway Traffic Safety Administration (NHTSA), DOT.

ACTION: Final rule.

SUMMARY: This final rule amends the test procedures in our standard on power-operated window, partition, and roof panel systems to accommodate and ensure effective evaluation of new technology, specifically automatic reversal systems that operate by infrared reflectance. The standard's existing test procedures are more suitable for other types of technology (*e.g.,* contact/force sensing systems and light beam interruption systems). In addition, the final rule clarifies the procedures for testing automatic reversal systems using a light beam interruption sensing method by specifying that rods used in testing such systems are not transparent.

DATES: *Effective Date:* The amendments made in this final rule are effective September 1, 2005. Voluntary compliance is permitted before that date.

Petitions: If you wish to submit a petition for reconsideration for this rule, your petition must be received by November 1, 2004.

ADDRESSES: Petitions for reconsideration should refer to the docket number above and be submitted to: Administrator, Room 5220, National Highway Traffic Safety Administration, 400 Seventh Street, SW., Washington, DC 20590.

See the **SUPPLEMENTARY INFORMATION** portion of this document (Section IX; Rulemaking Analyses and Notice) for DOT's Privacy Act Statement regarding documents submitted to the agency's dockets.

FOR FURTHER INFORMATION CONTACT: For non-legal issues, you may call Mr. Michael Pyne, Office of Crash Avoidance Standards (Telephone: 202–366–2720) (Fax: 202–366–4329).

For legal issues, you may call Mr. Eric Stas, Office of the Chief Counsel (Telephone: 202–366–2992) (Fax: 202–366–3820).

You may send mail to these officials at National Highway Traffic Safety Administration, 400 Seventh Street, SW., Washington, DC 20590.

SUPPLEMENTARY INFORMATION:

Table of Contents

I. Executive Summary
II. Background
III. Petition for Rulemaking from Prospects Corporation
IV. Notice of Proposed Rulemaking and Summary of Public Comments
V. The Final Rule
VI. Effective Date
VII. Benefits
VIII. Costs
IX. Rulemaking Analyses and Notices

I. Executive Summary

This final rule amends FMVSS No. 118, *Power-Operated Window, Partition, and Roof Panel Systems,* to specify test procedures for a new type of non-contact automatic reversal system. Specifically, these amendments accommodate and effectively evaluate automatic reversal systems based on infrared reflectance (IR) technology, which is capable of stopping and reversing a window prior to contacting an obstruction (*e.g.,* a head or arm). NHTSA determined that the existing test procedures were inappropriate for IR-based systems.

This rulemaking arose out of a petition for rulemaking submitted by Prospects Corporation, which the agency granted. Subsequently, NHTSA issued a notice of proposed rulemaking [1] that proposed test procedures for testing of IR-based automatic reversal systems. We received seven public comments on this proposal. These comments were generally supportive of the rulemaking, but sought modification of certain technical aspects of the proposed amendments.

Based upon all available information, the agency has decided to issue a final rule that replaces the standard's current single set of test procedures for contact and non-contact reversal systems with one set for reversal systems designed to detect obstructions by physical contact or by light beam interruption and a second set for reversal systems designed to detect proximity of obstructions using infrared reflectance. The first set of requirements and procedures is the same as the current set; the second set is new.

Thus, the final rule does not substantively modify or eliminate existing requirements in FMVSS No. 118 that relate to contact reversal systems based on force-sensing and non-contact reversal systems based on light beam interruption, nor does it change the circumstances under which power windows, roof panels, and partitions must automatically reverse direction, with one minor exception. This rulemaking amends the standard to specify that rods used for testing window reversal systems based on beam interruption are not transparent.

Although a more detailed discussion is provided later in this notice, the following summarizes the provisions of this final rule related to IR-based automatic reversal systems. The final rule accommodates those systems by specifying that the agency will test them using a different rod than the ones used in testing other types of reversal systems. Instead of a rod with a constant diameter as small as 4 mm, the agency will use a rod that has a tip with a length of 40 mm and a diameter of 10 mm, followed by a segment with a length of 300 mm and a diameter of 20 mm, followed by an additional length to permit the rod to be held during testing (*see* Figure 3).

The final rule ensures the effective evaluation of IR-based reversal systems by specifying that the test rod will have a reflectance of 1 percent. We believe that these size and reflectance specifications are reasonably representative of a small child (approximately 15 months in age) whose arm is reaching for a window opening from inside a vehicle with hand held flat and on edge relative to the emitter/sensor of the IR system, and whose hand is covered by snug-fitting fabric. The covering of the hand represents, for example, the situation of a child whose sleeves are too long or who has pulled his or her sleeves down. When an IR system senses an obstacle with the above characteristics, it must halt the window's closing and reverse direction to one of the specified positions under S5.2 of the standard.

These requirements apply to power-operated windows, roof panels, and interior partitions. However, we note that powered interior partitions represent a special case, because they can have occupant compartment space on both sides of the partition. Therefore, it is necessary that interior partitions be capable of reversing when obstacles enter from either side of the partition.

We do not expect this final rule to have a significant impact on the standard's expected benefits and costs. Because these IR-based systems are required to meet the same performance requirements as other automatic reversal systems (although in a different manner), the level of benefits under the standard is expected to remain unchanged. As to costs, because IR-based automatic power window reversal systems are not required under FMVSS No. 118, there are not expected to be any compliance costs imposed by this final rule. Further, manufacturers may utilize any technology that meets the performance requirements in paragraph S5 of the standard as tested in accordance with the procedures in paragraph S7.

II. Background

Federal Motor Vehicle Safety Standard (FMVSS) No. 118, *Power-Operated Window, Partition, and Roof Panel Systems,* regulates power-operated windows, partitions, and roof panels by specifying requirements for such systems designed to minimize the likelihood of death or injury from their inadvertent operation. Of particular concern, the standard addresses the threat to unsupervised children of being strangled or suffering limb-crushing injuries by closing power windows.[2] The standard applies to passenger cars, multipurpose passenger vehicles, and trucks with a gross vehicle weight rating of 4,536 kg (10,000 lbs.) or less.

FMVSS No. 118 has undergone periodic revision in order to accommodate technological developments related to power window systems. Originally, the standard required that the activation of power windows be linked to an ignition interlock. The standard prohibited the activation of power windows unless the key was in the ignition and turned to the ''On,'' ''Start,'' or ''Accessory'' position, based upon the presumption that this precondition would ensure that a driver was present to supervise children. It also ensured that the driver is provided with a simple means of disabling the power windows of a parked vehicle (*i.e.,* key removal).

Over the years, however, paragraph S4 of the standard has been amended to permit power windows closing in situations in which the key is not in the ignition, but the existence of adult supervision could be presumed for other reasons. Most recently, in 1991, NHTSA issued a final rule that responded to the interest of manufacturers in offering remote controls for window closing (*see* 56 FR 15290 (April 16, 1991)). In doing so, the agency was mindful that the unrestricted allowance of remote

[1] 61 FR 28124 (June 4, 1996) (Docket No. NHSTA–2004–18944–6).

[2] For the sake of simplicity, the preamble to this final rule collectively refers to these three types of systems as ''power windows.'' However, we note that amendments to the standard apply equally to powered partitions and roof panels as well.

controls, especially ones that activated windows using radio frequency signals that can penetrate obstructing walls, could pose a danger to child occupants because the person activating the window might not be able to see a child in the window opening. Therefore, in an effort to ensure the presence of a supervising person, the agency amended the standard to permit power windows to be operable through the use of remote controls only if the controls had a very limited range (*i.e.,* not more than 6 meters (m)). A longer range, up to 11 m, was permitted for remote controls that were operable only if there were an unobstructed line of sight between the control and the vehicle. (We note that the power windows of all vehicles sold in the U.S. are still linked to an ignition interlock or one of the exceptions under S4.)

Further, in that rulemaking, the agency reasoned that the provisions permitting remote control of a power window need not be premised on the likely existence of supervision if the window were equipped with an automatic reversal system.[3] If the system could sense a child's hand or head when it became trapped between the window and the window frame, and thereupon stop and reverse to release the child, then supervision would not be necessary. Similarly, if the window closing system could sense a child's hand or head and reverse before making contact, supervision would not be necessary. Therefore, the agency also established a provision (S5) permitting power windows equipped with an automatic reversal system meeting certain performance requirements to be closed in any manner desired by the manufacturer (*e.g.,* with or without a key). In addition, the rule permitted power windows equipped with such a system to be closed by remote controls of unrestricted range, as well as by sensors of adverse environmental conditions (*e.g.,* devices to open and close windows automatically in response to heat and rain) because the automatic reversal system would provide protection in those situations.

S5 specifies a single set of performance requirements and test procedures for all automatic reversal systems. The systems must reverse a closing power window either before the window contacts a semi-rigid cylindrical rod from 4 mm to 200 mm in diameter or before it exerts a squeezing force of 100 Newtons on the rod. The rods represent portions of a person's body, ranging in size from infant fingers to juvenile heads, inserted in the window openings. Further, the systems are required to open the window to any one of several specified points for the purpose of enabling a child to remove his or her hand or head from the window opening.

NHTSA worded S5 so as to allow the use of not only ''force-sensing'' systems, but also ''proximity-sensing'' systems by allowing automatic reversal systems that reversed the power window at any time prior to contact with the test rods in response to a commenter on the proposed 1991 amendments. That commenter expressed interest in developing reversal systems triggered by the blockage of light by a child's body (the same principle used by automatic reversal mechanisms on some garage doors with remote controls).

III. Petition for Rulemaking From Prospects Corporation

On November 4, 1994, Prospects Corporation (Prospects) submitted a petition for rulemaking[4] to NHTSA requesting that the agency amend FMVSS No. 118 to provide alternative testing requirements for non-contact automatic reversal systems. Prospects sought this change because the company had developed an automatic power window reversal system that operates on the principle of detecting the proximity of some portion of a person's body by sensing the reflection (instead of the blockage) of reflected infrared light. According to Prospects, the existing test procedure is inappropriate for non-contact automatic reversal systems that do not rely on light-blocking technology.

As described in its petition, the Prospects system employs an infrared emitter and a detector within the interior of the vehicle that are not aligned with one another. According to the petitioner, its system operates as follows. When no object is present in or near the plane of the window, the reflector receives a constant background level of infrared radiation reflected by the inside of the vehicle. In that situation, the window may close. However, when an occupant's head, hand or foot approaches the window, it will reflect a certain amount of additional radiation from the emitter to the detector. The detector senses the increase and electronically stops or reverses the window, even before the occupant's hand reaches the plane of the window.

To work properly under a variety of circumstances, an IR system must be sufficiently sensitive to detect a variety of materials, such as skin, hair, and clothing fabrics. Different materials have different abilities to reflect infrared radiation, a property called ''reflectance.'' The amount of radiation reflected is affected by the wavelength of the radiation, the angle of incidence of the radiation, the color and texture of the material, and the amount of surface area exposed.

Prospects was correct that, in amending FMVSS No. 118, NHTSA had not contemplated non-contact reversal systems that use IR technology. As a result, the associated requirements and test procedures were not designed to accommodate and effectively evaluate such systems. For example, the standard currently does not specify the amount of reflectance of the test rods.

NHTSA decided to grant the Prospects petition in order to facilitate the development and ensure the effective evaluation of automatic reversal systems based on IR principles, a potentially promising new technology. The agency believes that an IR system could provide safety benefits, because it does not require any contact between the window (or window frame) and an obstruction (*e.g.,* a person's hand, arm, or head) in order to reverse.

Because an IR-based system might not be able to detect a rod with constant diameter of 4 mm, and because such a system can detect light reflected from an area large enough to include a child's whole hand, the use of a rod representative of a child's hand would appropriately accommodate such a system. Because the standard currently does not specify the infrared reflectance of the test rods, it cannot adequately assess the safety of an automatic window reversal system based on infrared reflectance. Use of a test rod with a higher reflectance than that of a child's hand might allow a system to pass NHTSA's compliance test even though that system might not be sufficiently sensitive to detect a child's hand placed in or near the window opening. To promote safety, test requirements should simulate unfavorable conditions that are likely to occur in a motor vehicle. Further, without a specification for test rod reflectance, results of tests conducted by

[3] At the time of the 1991 amendments to the standard, automatic reversal systems for power windows did not exist on U.S. vehicles. The most detailed comments on that rulemaking indicated that companies were contemplating reversal systems triggered by force measurement, and NHTSA assumed that manufacturers would produce power window automatic reversal systems based on force-sensing technology. However, the development of automatic reversal systems has not proceeded as NHTSA has anticipated. NHTSA is not aware of any force-sensing systems currently being certified to meet FMVSS No. 118. Instead, manufacturers continue to certify their systems under paragraph S4 of the standard.

[4] Docket No. NHTSA–2004–18944–1.

different laboratories or manufacturers are likely to be inconsistent. Therefore, the agency decided to initiate rulemaking to modify the test procedures for IR-based systems.

IV. Notice of Proposed Rulemaking (NPRM) and Response to Public Comments

The NPRM

On June 4, 1996, NHTSA published a notice of proposed rulemaking (NPRM) in the **Federal Register** (61 FR 28124) proposing to amend FMVSS No. 118 to permit the use of an automatic reversal system based upon infrared reflectance technology. The NPRM was summarized in the NPRM itself as follows:

> In response to a petition from Prospects Corporation (Prospects), this document proposes to amend Standard 118, Power-Operated Window, Partition, and Roof Panel Systems, to accommodate power windows, partitions, and roof panels which automatically reverse when closing if an infrared system detects an object in or near the path of the closing window, partition, or panel. Since infrared systems may fail to detect an object the size of a very young child's finger, but can detect the child's hand, the agency is proposing to test those systems using a rod representing the side profile of a child's hand. The proposal also specifies the infrared reflectance of the rods used for testing those systems. This document also proposes to amend the requirements for systems that stop the window, partition, or panel before an appendage or other body part could become trapped by it by eliminating the requirement that those systems reverse after stopping. Reversal is not necessary unless there is a risk that a person may become trapped.

The NPRM provided a detailed discussion of a number of relevant issues, including the size of the target inboard of the window plane, the reflectance of the target (discussing both testing methods and results), protection of persons outside the vehicle, the presumption of supervision, and the need for reversal. The notice also asked a series of seven questions, most of which related to the details for addressing the Prospects petition; however, two of the questions dealt with the topics of ''express-up'' operation (*i.e.*, a closing mode which requires only momentary switch contact to close the window, rather than continuous activation) and the possibility of requiring a driver-controlled rear lock-out of the rear power windows.

Regarding the size of the target, the NPRM stated that because the existing standard does not specify the size of the portion of the test rod that is inboard of the window (*i.e.*, the area in or near the plane of the window when it is closed), it does not specify one of the most important test conditions for the IR proximity detection system developed by the petitioner. The NPRM proposed 15 mm as a reasonable worst-case dimension for targets inboard of the plane of the window, which corresponds to the thickness of the edge view of a 15-month-old infant's hand, as reported by the petitioner. The agency considered this to be a reasonably conservative estimate, because newborn babies with somewhat smaller hands would be incapable of raising themselves up to an exposed position, and even the smallest hands would present a target wider than 15 mm in most orientations. Although the petitioner suggested a hand-shaped test rod, the agency tentatively decided that the use of cylindrical test rods remains preferable, because they are easier to manufacture and they remove the need to consider the orientation of the target along its axis.

Regarding reflectance of the target, the agency proposed a minimum reflectance of 0.7 percent for the test rods, a conservative value that equals the minimum reflectance of black cotton/polyester. As discussed in the NPRM, ''reflectance'' is a critical concept for IR systems, with the term being defined as the ratio of the intensity of the light (measured by a detector as energy) reflected by the surface of a material to that of the light that strikes the surface of the material. As noted above, without a specification for test rod reflectance, the safety of an IR-based automatic reversal system could not be assessed, because use of a test rod with a higher reflectance than a child's hand might allow the system to pass NHTSA's compliance test even though the system might not be sufficiently sensitive to detect a child's hand placed in or near the window opening.

The proposed value for test rod reflectance was based upon supplementary data provided by the petitioner. Because color affects reflectance, the reflective properties of skin of different shades and colors are important, as are the reflective properties of gloves and clothing, which may be more difficult to detect than bare skin. Consequently, the petitioner provided measurements of the infrared light reflected from human skin and a large variety of leathers and fabrics, using the following methodology.

Measurements of reflectance were conducted by the petitioner with an apparatus incorporating an infrared light source (nominal wavelength 950 nanometers (nm)) and a light sensor of the type used in the prototype window reversal system appearing in Appendix 1 of the petitioner's report.[5] According to the petitioner, its reflectance testing was conducted as follows. The apparatus projected infrared light on the skin or material sample and received the reflected (or scattered) light at an equal angle of reflection. The angle of incidence was 16 degrees. The distance from the source to the sample, and the distance from the sample to the light sensor, were the same (about 135 mm). The light reaching the sensor was measured with and without the sample in place, so that the light reflected from the sample holder could be discounted.[6]

In order to ensure that NHTSA's test procedures are as general and as design-independent as possible, the agency sought to propose requirements that express the infrared reflective properties of skin and other materials in terms that are not specific to a particular light source and sensor. Accordingly, we decided to propose the use of a high reflectance mirror as a comparison medium. A mirror that reflects 99.99 percent of infrared light was mounted in the apparatus as a sample. The presence of the mirror caused the infrared sensor to receive 47 microwatts. The power measured with the sample materials was divided by this power, and the resulting ratio was multiplied by 100 percent to produce a value that is characteristic of each sample. When normalized by the mirror measurement in this way, the skin and material measurements become independent of the power, beam size and dispersion of the light source, and the size and sensitivity of the infrared sensor.

This method of normalizing the power measurements also has the benefit of producing results of general utility, regardless of the size of the sample. The sensitivity of the reflectance determination to changes in the light path length of the apparatus is low, because measurements using the sample and the mirror would be affected in the same proportion by a change in light path length. Therefore, the length of the light path need not be specified.

However, NHTSA specified a proposed angle of incidence and reflection (16 degrees) to be used when determining the reflectance of the test

[5] Docket No. NHTSA–2004–18944–2.

[6] Although the light reaching the sensor can be thought of as having been reflected by the sample, it arrives by the combination of reflection from the surface of the sample and scattering by the texture of the sample. Since both the test apparatus and any in-vehicle devices that might be produced measure the sum of reflection and scatter, there is no need to distinguish between the two mechanisms that result in light reaching the sensor. Therefore, the term ''reflection'' is used in a broad sense to refer to all light reaching the sensor as a consequence of the presence of the sample.

rods, in order to avoid changes in the relative composition of reflected and scattered light from textured samples. We note that specifying these angles does not restrict vehicle design in any way, but only defines the parameters to be used when producing test rods.

In conducting its testing, the petitioner measured the skin of Caucasian, African-American, and Asian persons at the back of the hand and at the palm, and the total range of reflectance was determined to be from 2.04 to 2.96 percent. The petitioner also tested 37 samples of potential skin coverings, including various colors, textures, and types of fabric and leather (*e.g.*, wool, silk, cotton, polyester, and a 35% cotton/65% polyester blend). The range of reflectance for these samples was 0.70 to 6.09 percent, with the worst case being a black cotton/polyester material. NHTSA's proposed reflectance level for the test rods was intended to provide protection in this worst-case scenario.

In the NPRM, NHTSA also considered whether IR-based systems would provide protection to a person who is outside the vehicle and is reaching toward or into the vehicle. Such consideration is important because paragraph S5 of the Standard No. 118 relieves power window systems with automatic reversal from the presence-of-supervision-assuring restrictions of S4. It cannot be assumed that an infrared proximity detector will operate on objects shielded by window glass, and thus, the proposal was drafted such that only portions of a person's body inside the window would be capable of triggering the system.

However, the agency's analysis suggested that IR-based systems do not pose a great danger to persons outside of the vehicle. Although the agency recognized the possibility for abuse of the system (*e.g.*, children on either side of the window playing ''chicken'' with the system), we stated our belief that that possibility is not serious enough to warrant declining to facilitate the use of power window systems with infrared sensors. This belief was based on the assumption that manufacturers would not make automatic window closing possible in the absence of the ignition key, except possibly for rain protection or for a limited time after key removal. In addition, children who can reach the top of the window from the ground are old enough to possess some level of experience and judgment, and a very slight withdrawal motion is all that is necessary for self-protection.

In response to public concerns about the safety of the existing standard, we thought it appropriate to address such concerns in the NPRM, particularly because the proposal would make the standard more permissive. The agency expressed its intention, before proceeding to a final rule, to examine certain design possibilities, not prohibited by S4, that may reduce either the likelihood or the effectiveness of driver supervision. Specific examples include: (1) The possibility of windows closing when the ignition key is in the ''accessory,'' as well as the ''on'' and ''start'' positions, and (2) an ''express up'' closing mode, which requires only momentary switch contact rather than continuous activation to close the window.

The NPRM also discussed the reversal requirement in the context of IR-based systems. The existing standard requires that closing power windows halt to avoid applying excessive squeezing force on a passenger, and then reverse their travel to release the person so that the person does not remain trapped by the window. However, because non-contact window systems can detect the proximity of a person over a large interior space and can halt the window before the person enters the pinch zone, the NPRM proposed to exclude such systems from this reversal requirement. However, it was noted that systems with limited sensitivity must be able to reverse in order to avoid the possibility of trapping a child's head.

Finally, NHTSA proposed to make the proposed amendments effective 30 days after publication of a final rule, and manufacturers offering IR-based window systems would have to comply with the requirements on the same date. The agency stated that there would be good cause for such an effective date because the amendments would not impose any new requirements but would instead relieve a restriction.

Summary of Public Comments

Overview

Comments on the NPRM were received from six organizations (Prospects Corporation, Advocates for Highway and Auto Safety, BMW of North America, Chrysler Corporation, Pektron Ltd., and Toyota Motor Corporate Services) and one individual (Mr. Thomas P. Flanagan).[7] Issues raised by the commenters generally can be categorized into five key topics: (1) Size and shape of the test rods; (2) reflectance of the test rods; (3) material reflectance test methods; (4) sunlight and other ambient factors; and (5) need for reversal. These subject areas (corresponding to specific questions raised in the NPRM) each will be discussed in turn, along with a brief discussion of one or two unrelated comments.

This notice also discusses additional clarifying information provided by the petitioner at the request of the agency after the comment period was over. That information was needed in order to supplement the petitioner's NPRM comments and to clarify a number of details.

Test Rod Size and Shape

Only Prospects Corporation commented on the proposed size and shape of the test rods. In general, Prospects agreed with the intent of the NPRM to further refine the standard's test procedures to accommodate new types of detection systems, stating that requirements should focus on the safety of heads, necks, arms and hands. Prospects supported the agency's position in the NPRM that the smallest relevant obstruction that must be detected by an infrared reflectance system would not be a single finger, but a hand as a whole held on edge. Prospects again suggested that the agency should adopt a hand-shaped test device, but as we noted in the NPRM, in a worst-case scenario, a hand could be held flat and oriented to the sensor such that only the edge of the hand is exposed. Prospects acknowledged the possibility of a child's hand being oriented in this way, and it agreed that test rod orientation in compliance tests would be easier with a cylindrically shaped device.

However, Prospects expressed concerns that the test requirements outlined in the proposal, in an attempt to be conservative, may be overly strict and could rule out further development of infrared reflection systems. Specifically, Prospects stated its belief that a 15 mm test rod is conservative and that combined with a surface reflectance of 0.7 percent, the test would not be representative of any real world situation. The company stated that by combining the worst case values for the two key test rod characteristics (*i.e.*, cross-sectional diameter and IR) would make it nearly impossible for an IR-based system to detect the test rod in all locations in a vehicle window opening. Further, Prospects argued that to the extent the proposed requirements retard the development of IR-based systems, the safety benefits of such non-contact systems may be lost (*i.e.*, recognizing a person's head/neck/arm/hand before exerting a potentially injurious force).

Ultimately, Prospects did incorporate the 15 mm cylindrical test rod size and

[7] All comments and other correspondence discussed in this notice are available under Docket No. NHTSA–2004–18944.

shape proposed in the NPRM into at least one of its own suggested options for amending FMVSS No. 118.

Infrared Reflectance of Test Rods

The issue of test rod reflectance characteristics was discussed in the comments of both Prospects and Pektron. Pektron, a British firm that manufactures power window sensors, asked whether the petitioner had conducted exhaustive testing of materials to determine the lowest reflectance level. It also questioned whether it would be acceptable to use the petitioner's lowest measured reflectance level (0.7 percent, as proposed in the NPRM) without a safety factor.

Prospects expressed concern about the low value of reflectance (0.7 percent) proposed for the test rods in the NPRM. It instead suggested adoption of a test procedure incorporating a reflectance of 2.2 percent, which was the lowest average reflectance measurement for a bare hand. Prospects reasoned that materials used for gloves would likely have an even higher reflective value.

As mentioned above, Prospects stated that the material with a 0.7 percent reflectance, on which the NPRM based its proposed reflectance value, was a very thin, 35 percent cotton/65 percent polyester blend that would not be appropriate for making gloves. Instead, the material was partially transparent, allowing infrared energy to pass through it easily. Prospects argued that the material with the second lowest reflectance (1.5 percent) also was not glove material.

Prospects stated that the fabric used in gloves is thicker, and more importantly, has a more woven texture, especially on a microscopic level. For example, Prospects asserted that actual wool gloves would have reflectance signals that are approximately double the signal of the tested sample of thin, black wool. Color also makes a difference in terms of reflectance, as both of the above materials reported much higher reflectances for colors other than black.

According to Prospects, the next lowest reflectance measurement was for a bare hand, which had a low value of 2.04 percent reflectance and a three-sample average of 2.2 percent. All of the other materials tested by the petitioner reported higher reflectance values. Based upon the above reasoning, Prospects expressed its belief that if the standard specifies a small diameter test rod designed to represent a child's finger or hand edge, then only the reflectance value of bare skin or materials likely to be worn on the hands should be considered when determining the reflectance of the test rods.

Test Rod Size and Reflectance Values in Combination

The NPRM asked specific questions regarding whether the proposed test rod size and reflectance value are appropriate, when considered in combination. A follow-up question asked whether, under those circumstances, the prototype IR-based system developed by Prospects would be capable of detecting an obstruction at all points in a vehicle window opening.

Prospects stated that under the proposed procedure (*i.e.*, a 15 mm test rod combined with 0.7 percent surface reflectance), it would be nearly impossible for the system to detect an obstruction in all locations of a vehicle window opening. Specifically, Prospects stated that at the furthest corner from the IR sensor (*i.e.*, an extreme standoff distance of 750 mm (30 inches)), the IR signal reflected from an obstruction would likely be too weak for the system to distinguish from background levels. Prospects argued that it is highly unlikely that these worst-case conditions of test rod size, reflectance, and location would occur simultaneously, and therefore, the test is unnecessarily strict.

Prospects also stated that in a real world situation, it is unlikely that a hand would continuously be held in a worst-case orientation, and that eventually, the window itself is likely to push on the hand, change its orientation, and expose a larger profile to the sensor. As a result of such contact in such unusual situations, it is argued that the IR-based system would automatically reverse the window.

Reflectance Measurement Technique

Prospects and Pektron both commented on the NPRM's proposed method for measuring the characteristic reflectance of the test rod material and whether a nominal test value of 950 nm wavelength (*i.e.*, in a range of 950 nm +mn; 100 nm) is appropriate.

Regarding wavelength test values, Prospects commented that it had chosen infrared devices operating at the 950 nm wavelength in order to maximize the sensitivity of its current system. However, the company expressed a willingness to test at other wavelengths outside this corridor, if the agency so requests.

Regarding the 16-degree angle of incidence/reflection used to measure the IR of materials, Pektron commented that scatter effects might influence the validity of reflectance values measured by the techniques proposed under the NRPM. It stated that while the proposed technique might be acceptable for obtaining a reference level from a mirror, it may not adequately account for the differing scatter characteristics of tested materials. Pektron also argued that relative measurements could vary depending upon the absolute size of the exposed sample area in the test fixture as a result of scatter. However, Pektron did not provide any quantitative information to support its assertion, nor did it suggest an alternative test method.

Pektron commented that the installed angle of the IR emitter and receiver may be important, but is currently undefined. However, Prospects stated that the 16-degree angle was not intended to represent the actual angle between the IR emitter and the sensor to be used in a vehicle. Although the system was initially tested at a 16-degree angle, Prospects stated that upon actual installation, the angle would be expected to be closer to zero degrees, thereby resulting in greater direct reflection from obstructions. Prospects added that it subsequently ran verification tests, during which the incidence/reflection angle was adjusted to 10 degrees and 20 degrees. According to Prospects, while the absolute reflectance intensities did change, the relationship among the values of the various materials remained approximately the same.

Need for Reversal

Both Advocates and Mr. Flanagan commented on the NPRM's proposed exclusion of IR reflectance systems from the automatic reversal requirement of paragraph S5 of the standard. The proposed exclusion was premised on the fact that an IR-based system could halt the closing motion of a power window prior to an obstruction entering the window opening. Because these systems can activate before entrapment can occur, it was tentatively decided that there would be no need for the window to reverse direction.

Advocates generally supported the NPRM's position on reversal for IR-based systems, provided those systems operate with proven reliability. However, Advocates stated that for windows with express-up capability, the reversal requirement should be maintained, regardless of the type of obstacle sensing device installed on the vehicle.

Mr. Flanagan opposed excluding IR-based systems from the reversal requirement of S5, arguing that such a

change could endanger children.[8] He commented that the size of the 100 mm vertical dimension of the detection zone specified in S5(b) of the proposed amendment is inadequate. To support his contention, Mr. Flanagan described two scenarios in which a child might still be injured unless IR-based systems are subject to a reversal requirement. In the first, he described a situation in which a child's head could become entrapped in a vehicle window opening, even if the window was equipped with an IR-based detection system that complied with the NPRM's proposed detection zone requirements. Mr. Flanagan also described a scenario in which a child sitting in the vehicle's window opening could be pushed backward out of the vehicle and onto the ground by the closing window.

Testing in Sunlight

BMW, Pektron, and Prospects all commented on the issue of testing of IR-based systems in sunlight. Generally, the commenters supported the idea of testing in sunlight, but they argued that the requirement, as presented in the NPRM, was not sufficiently objective and that test results could be influenced by a variety of factors.

BMW stated that the proposed regulatory text regarding testing in sunlight is not specific enough to be objective. Instead, BMW recommended that the standard specify a uniform sunlight simulation in order to eliminate discrepancies in defining direct sunlight.

Pektron stated that the proposed rule's test requirements do not offer sufficient detail, such as specifying the direction from which the sun would be coming. Pektron also commented that a constant, ambient level of sunlight is not as difficult for a system to cope with as a rapidly changing level as might occur when a vehicle is passing by trees or fences.

Although Prospects agreed that testing should include the effect of sunlight, it stated that test results in natural sunlight may be inconsistent, because natural sunlight varies with incidence angle and intensity, which in turn, depends upon the time of year, time of day, longitude, and latitude. Prospects recommended that NHTSA solve these potential problems by defining a laboratory test using artificial sunlight. In its comments, Prospects stated that a repeatable test method could be developed by specifying light source intensity, incidence angle, and spectral content, although recommended values for these parameters were not provided.

Regarding suitable specifications for indoor solar simulation when conducting testing, Prospects stated that the worst case for sunlight interference occurs when the sun's rays are perpendicular to the system's sensor, and it recommended a lighting simulation based on the following. First, Prospects stated that, at the longitude and latitude of its offices in Massachusetts, a worst-case angle occurs at approximately 5 p.m. (time of year unspecified). The measured solar intensity at that time was said to be 35,300 lux with a handheld meter. In its own laboratory experimentation, Prospects subjected its system to 35,000 lux by using two 1M candlepower lamps placed 2.5 meters from the sensor. (Prospects did not specify the type of lamps, nor did it mention what the spectral content of their lighting arrangement was compared to natural sunlight, particularly in the infrared range.)

Operation With Key in Accessory Position, Express-Up Operation, and Rear Window Lock-Out

As discussed below, commenters generally opposed agency amendment of FMVSS No. 118 in the areas of power window operation with the key in the accessory position, express-up operation, and rear window lock-out, as part of this rulemaking. However, different reasons were offered, as discussed below.

Advocates opposed operation of power windows when the ignition switch is in the accessory position, a feature that currently exists on some vehicle models. Further, Advocates stated that some vehicles permit power window operation for a period of time without a key in the ignition, providing the example of a Mitsubishi passenger car that has windows with retained power operation for thirty seconds after key removal (unless the passenger door is opened, at which time power window operation is immediately canceled).

Regarding the NPRM's questions about rear window lock-out, Advocates strongly supported giving drivers the capability of locking out rear power windows to prevent use by children. However, Advocates stated that express-up power closure of side windows should be permitted only if the system can detect an intervening obstacle (even a small child's finger) and stop closure before contact is made.

Advocates stated that the agency lacks appropriate safety information on which to base a specific proposal in the areas of ignition switch settings, lock-out of rear seat power windows, and express-up operation. Accordingly, Advocates argued that NHTSA should not move to a final rule in these areas without an adequate basis for rulemaking, including issuance of proposed regulatory text for public review and comment.

Mr. Flanagan stated his opinion that the safety risk increases when an unsupervised child is no longer afforded the protection of an ignition lock-out, and he also argued that adequate child supervision should not be presumed, citing numerous cases of children being killed or injured by power windows, even with adults present. Mr. Flanagan stated his belief that remote operation of power windows is unsafe, and he advocated prohibiting express-up window operation because it is prone to inadvertent actuation, especially if operated by remote control.

In their comments, vehicle manufacturers generally opposed regulation in the areas of ignition switch settings, lock-out of rear seat power windows, and express-up operation. BMW stated that there is not a recognized safety problem and that regulation in these areas would not produce any quantifiable safety benefits. BMW stated that its passenger cars have had rear power window lock-out for twenty years, and it commented that express-up operation is already adequately regulated under the existing conditions of S4 of the standard. Chrysler also commented that the express-up feature should be permitted as a manufacturer design option. Toyota also expressed opposition to any amendment of the standard that would prohibit either power window closure with the key in the accessory position or express-up closure, because Toyota believes that the standard currently permits and should continue to permit these two operations.

Other Comments and Issues

Pektron commented that the fail-safe aspects of an IR reflectance system should be considered, and it stated that in order to achieve a fail-safe mode for the petitioner's system, it would be necessary to confirm the presence of an active beam. Pektron also commented regarding the potential for radio frequency interference and electromagnetic compatibility failures, and it recommended that a power window system should be required to tolerate a minimum level of ambient electromagnetic radiation.

BMW stated that, under the current standard, any non-contact system could

[8] Further, Mr. Flanagan commented that the agency should concentrate on requiring push-pull switches and eliminating the use of ''rocker'' or ''toggle'' type switches. NHTSA has addressed that topic in a separate rulemaking (see Docket No. NHTSA–2004–17216).

be certified for compliance under S5 as long as the system could detect the test rods and reverse as required. However, BMW commented that, as proposed, the amendment to the standard would limit the applicability of the existing test procedures to contact detection systems, but at the same time, the new test procedures for non-contact detection systems would limit such systems to those using IR reflectance technology. Accordingly, BMW recommended that any new provisions added to the standard for non-contact systems should apply equally to all types of non-contact systems, whether or not they utilize IR reflectance technology. Pektron also urged the agency to afford equal treatment to other types of non-contact automatic reversal systems, including its beam blockage system.

Pektron commented that any final rule amending FMVSS No. 118 should give equal consideration to other types of non-contact systems, such as its own IR beam interruption system. In addition, Prospects stated that the same test specified for IR reflectance systems should be required for systems with infrared emitters and receivers in line with each other (*i.e.*, systems that use beam interruption rather than reflectance).

Subsequent Correspondence With Petitioner

As mentioned earlier, the agency contacted Prospects after the close of the comment period to obtain additional information in order to clarify three unanswered questions related to testing of IR-based systems. Both the agency's letter and the company's response have been filed in the docket.[9] The first question posed by the agency involved the influence of sunlight on testing of IR reflectance systems, a topic discussed earlier in this notice.

The agency's second question asked what the aggregate reflectance would be if a hand were covered by material with the lowest measured reflectance (*i.e.*, 0.7 percent for the 35-percent cotton/65-percent polyester fabric). We sought this information because the fabric by itself, without a hand behind it, would never need to be detected. Therefore, the lowest reflectance value that is significant for occupant safety is that which represents a hand covered by the fabric. If the low reflectance of that fabric was due in part to its translucency, then the presence of a hand having higher reflectance behind the fabric might increase the measured value.

According to Prospects' response, placing a hand behind the 35-percent cotton/65-percent polyester fabric did result in an increase in measured reflectance from 0.7 percent to nearly 1.0 percent.

The agency's third question asked what would be a reasonable safety factor for the reflectance value. According to available data, the lowest reflectance of human skin in a single measurement was reported as 2.04 percent. Consequently, we believe that two-percent reflectance for the test rods would be an inappropriate minimum value, because it would leave no margin of safety to account for the presence of gloves or clothing that might decrease overall reflectance.

Prospects stated that it is very difficult to quantify a safety factor for an IR reflectance system, but the petitioner provided a number of reasons why it believes that a reasonable safety factor is already included in the test specifications included in its earlier comments (*i.e.*, 15 mm test rod diameter with 2.2 percent test rod reflectance). It stated that the black 35-percent cotton/65-percent polyester fabric with a 0.7 percent reflectance was an outlier in the data compared to other materials tested. Samples of the same fabric in other colors had reflectances of 2.8 percent or more. Similarly, Prospects stated that its measurement of human skin reflectance ranged as high as 2.89 percent, with only one measurement as low as 2.04 percent. According to Prospects, the next lowest skin reflectance measurement, 2.23 percent, was considerably higher than the 2.04 percent low value, and the average for all the skin measurements was higher still. Thus, Prospects argued that 2.2 percent is a conservative reflectance value that would provide an adequate margin of safety.

In its supplemental submission, Prospects also elaborated on the characteristics of the detection area covered by the IR sensor. Prospects had previously stated that the detection area of the IR-based system installed on a vehicle would be three dimensional rather than planar. The petitioner stated that the detection area would extend a considerable distance into the vehicle occupant compartment and that the system could detect objects anywhere inside of the three-dimensional space.

Information provided by Prospects suggests that the width of the detection zone would be substantial compared with the dimensions of a child's hand, and the detection capability would be greatest near the top of the window opening (farther from the sensor) where the pinch potential for small appendages is greatest. Prospects stated that the width of the detection zone for its system would be at least 15 cm (5.9 inches).

V. The Final Rule [10]

Overview

After considering comments on the proposed rule and the information provided by the petitioner, we have decided to amend FMVSS No. 118 to specify test procedures for non-contact detection systems that use an infrared reflection technique.[11] Accordingly, this notice modifies paragraph S5 of the standard and also adds new paragraphs S7, S8, and S9 to make explicit the test procedures and test rod characteristics that are applicable to different types of automatic reversal systems.

The final rule does not modify or eliminate existing requirements in FMVSS No. 118 which relate to contact/force sensing reversal systems and light beam interruption, nor does it change the circumstances under which power windows, roof panels, and partitions must automatically reverse direction, with the exception of the following change.

In light of the comments submitted by Pektron and BMW about the need to accord fair treatment to other types of non-contact automatic reversal systems (*e.g.*, light beam interruption systems), we decided to undertake a general review of the standard's test procedures in the course of modifying those procedures to accommodate systems using IR reflectance technology. After

[9] Docket No. NHTSA–2004–18944–15.

[10] Although there has been a long interval between the NPRM and the resulting final rule, we have decided to proceed now with issuing a final rule, instead of seeking new comments, for several reasons. First, the technology for automatic power window reversal systems based upon IR reflectance remains available in the marketplace, and amendments to the standard are still required to accommodate and effectively evaluate such systems. Second, we believe that IR-based systems have not changed appreciably in any way that would change our decisions about the nature of the amendments necessary to accommodate and effectively evaluate those systems. Third, other than relatively minor technical changes, the requirements of this rulemaking are largely the same as presented in the NPRM. For these reasons, we do not see any significant possibility that obtaining further public comment would change the information before this agency. Accordingly, we have decided that it is in the public interest to proceed at this time to a final rule.

[11] NHTSA recognizes that in the future, there may be new power window systems based on still other principles, which use techniques for sensing obstacles different from those mentioned in this notice. However, although we strive to make our safety standards as general and widely applicable as possible, the agency cannot propose to amend the standard to regulate the safety of those systems until their underlying principles are identified and adequately defined. As a result, further amendment of FMVSS No. 118 may be required in the future in order to respond to additional new technology.

conducting this review, we determined that one additional, minor modification to the standard was necessary, as follows. This rulemaking amends FMVSS No. 118 to require that test rods used for testing window reversal systems using a beam interruption sensing method not be transparent (*i.e.*, made of a material that allows significant infrared, visible, or ultraviolet light to pass through).

In actual use, these systems depend on blockage of a light beam by an obstruction in order to sense the obstruction, so it is possible that a transparent obstruction would not be detected. However, any obstruction relevant to safety (*i.e.*, a human limb) will always be opaque. Prior to this rulemaking, FMVSS No. 118 had been silent as to test rod transparency. Therefore, if a transparent test rod were used and the system failed to activate as a result, this would not be an indication of an unsafe system, but merely an artifact in the standard. This amendment will ensure that FMVSS No. 118 test procedures better correspond to actual operating conditions and will prevent the discouragement of this technology.

The following provides more in-depth discussion of the standard's new requirements and rationale related to automatic window reversal systems based on infrared reflectance technology.

Need for the Rulemaking

In response to comments on the need for the present rulemaking action, we would clarify that the standard currently permits and specifies requirements for power window systems that reverse direction ''before contacting, or before exerting a maximum squeezing force'' on an obstruction (*see* S5(a)(1)). Thus, the existing test procedures in the standard are applicable to non-contact systems using IR beam interruption technology.

However, as discussed earlier, we have determined that the test procedures in the current standard are not appropriate for IR reflectance systems. While it is true that the amended standard will contain separate test procedures for different types of power window reversal systems, we do not see any problem with having two sets of test procedures, in light of the dissimilar technologies responsible for automatic reversal of the power windows. Accordingly, under the amended standard, one set of test procedures will apply to non-contact systems using IR reflection, and another set of test procedures (*i.e.*, the procedures previously in S5) will apply to contact systems and non-contact systems using beam interruption. Other than one clarification regarding test rod opaqueness, we are not requiring beam interruption systems to meet any requirements different from those that apply to contact systems.

Specifications for Test Rods

After consideration of the public comments and new information presented to the agency, we believe that the NPRM's proposed test rod with a 15 mm diameter (equivalent to the size of the palm edge of a 15-month-old) should be revised. We selected the proposed specifications for the proposed test rod based on the assumption that an IR-based system would need to detect an object as small as a small child's hand held on edge relative to the IR beam emitter. We assumed that only the hand of a small child would fall within the system's field of view and would be the only source of reflected IR energy in a worst case situation. However, it is evident from the information submitted by Prospects on the width of the detection zone, that a portion of the arm of a small child, in addition to the hand, would be exposed to the IR beam. Accordingly, in this final rule, we have decided to increase the test rod diameter to more adequately account for the wider cross-sectional area contributed by the forearm.

Therefore, we are specifying test rod dimensions as provided in Figure 3. Specifically, the tip of the test rod has a length of 40 mm and a diameter of 10 mm, and the next segment of the test rod has a length of 300 mm and a diameter of 20 mm. (Additional length is provided at the end of the test rod in order to hold and position the rod during testing.)

We are also specifying that the test rods will have an IR reflectance of 1 percent. As discussed in further detail below, we believe that these specifications are reasonably representative of a small child (approximately 15 months in age) reaching for a window opening from inside a vehicle with hand held flat and on edge relative to the emitter/sensor of the IR reflectance system, and whose hand is covered by snug-fitting fabric such that the relative reflectance rate of the covered hand is 1 percent, as measured by the procedure set forth in this final rule. Although some commenters may believe that these requirements are overly conservative, we believe that a desire to accommodate new technologies does not justify safety trade-offs that might permit certain injuries to fingers, even in rare cases (such as when a child's hand is covered with low reflectance materials and is held in an unfavorable orientation).

Testing is conducted at a 16-degree angle of incidence, using a flat sample, with an incandescent light source and sensor with a nominal wavelength of 950 nm (*i.e.*, 950 nm ± 100 nm). In order to ensure an objective standard with repeatable test results, we believe that the test fixture incidence/reflection angle must be specified. Further, it is our understanding that bare skin and clothing materials are reasonably uniform, such that their measured reflectance should not be overly sensitive to whatever incidence/reflection angle is selected. This conclusion is supported by the results of the petitioner's experimentation using angles other than 16 degrees.

We believe that the proposed method of infrared reflectance measurement will achieve the goal of comparing the relative (rather than absolute) reflectance of different materials for use in test rods and that it will provide the requisite level of repeatability. Because there was not any information provided that would indicate that another angle would better serve this purpose, the 16-degree test angle proposed in the NPRM has been adopted as part of this final rule (see S8). Further, since no other commenter besides Prospects addressed the wavelength issue, we believe that a 950 nm nominal value (range of 850–1050 nm) is appropriate.

Testing is conducted under simulated sunlight conditions using lighting which projects 64,500 lux (6,000 foot candles) onto the infrared sensor. We agree with the commenters that requiring a test in actual sunlight would create an unnecessary burden on manufacturers and test laboratories, particularly after considering the potential effects of background infrared energy from sunlight on an IR-based power window reversal system. Therefore, in order to reasonably duplicate ambient sunlight, we have decided to specify the amount of background light to which the IR reflectance system's sensor must be subjected during testing. The selected value is based upon actual measurements of horizontal luminance made at 5 p.m. in San Diego, California, in August 1989 during evaluations of the conspicuity of daytime running lights.[12] Although this value is higher than the value recommended by the petitioner, we believe that it is necessary for the system to operate

[12] ''Evaluation of the Conspicuity of Daytime Running Lights,'' (DOT HS 807 613) (April 1990) (Docket No. NHTSA–2004–18944–17).

under such circumstances, which are foreseeable in many parts of the U.S.

The amended requirements also state that the lamps used for testing are arranged as close to perpendicular as possible to the plane of the lens of the IR sensor. This placement would account for the worst case test condition, which occurs when the sunlight is perpendicular to the IR emitter/sensor.

The following rationale serves as the basis for selecting the parameters for the test rod and other test requirements.

1. Detection Zone Width

As a preliminary matter, we note that the purpose of estimating a detection zone width is to facilitate the selection of an appropriate test rod diameter that would reasonably represent the limb of a small child in a worst-case scenario. This final rule does not impose any requirement for detection zone width as part of the standard.

With that background, we note that Prospects indicated that the width of the three-dimensional detection zone covered by the IR reflection system (*i.e.*, the distance from the plane of the window opening to a plane inside the vehicle representing the outer functional limit or edge of the detection zone) is at least 15 cm. Presumably, that width estimate corresponds to a location near the top of the window opening where the pinch potential is greatest.

However, we have decided that for the purpose of selecting a test rod diameter, it is inappropriate to rely on that suggested 15 cm dimension for two reasons. First, the IR reflectance systems tested by Prospects were prototypes, so it is uncertain whether the performance of systems in actual production would have the same detection zone width. Second, the 15 cm value was the distance to the limit of the detection zone, not to some intermediate point within it. If the rod size were selected based upon the portion of a child's arm at the limit of the detection zone, it would probably overestimate the reflective area of the arm. Instead, the test rod diameter should emulate the portion of a small child's arm that is situated well within the detection zone when the fingertip just reaches the window opening. In this way, the test rod will represent the predominant reflective cross-sectional area of the entire exposed forearm.

In selecting a test rod diameter, we estimated that a point 10 cm from the window opening is an appropriate intermediate point in the detection zone. Thus, the test rod would need to have the same diameter as a 15-month-old child's arm measured at a distance of 10 cm from the fingertip. We believe that this value is a conservative estimate that will provide a substantial margin of safety under foreseeable conditions.

2. Child Anthropometry and the Relative Size of Hands and Arms

With the above detection zone in mind, we then examined available information to determine the average size of a 15-month-old child's arm at a point 10 cm from the fingertip. Prospects provided anthropometric data on cross-sectional widths of the hands and arms of children of various ages, including those as young as two years of age. However, the petitioner's data did not include a value for the size of a 15-month-old's forearm at the desired measurement point, and we were similarly unable to find an exact figure in any published reference materials. Instead, we extrapolated available data to arrive at a suitable dimensional specification, utilizing Prospect's data and a scientific paper published by the Society of Automotive Engineers (SAE).[13] The SAE paper contains pertinent measurements of children's hands and arms which, when combined with data provided by Prospects for two-year-old children, gives a reasonable estimate of the appropriate test rod size.

According to the SAE report, the difference in the maximum forearm diameters of a 15-month-old and a two-year-old is small (45 mm vs. 48 mm, respectively), while the difference between the forearm lengths of those same children is more significant (203 mm *vs.* 237 mm). The report also states that the length of an outstretched hand of both a 15-month-old and a two-year-old is approximately 10 cm (9.3 cm and 10 cm, respectively). Therefore, a point 15 cm from each child's fingertip would fall well onto the forearm of both, and we estimate that the diameter at 15 cm for the 15-month-old would be roughly the same as for the two-year-old (37 mm according to Prospect's data). We expect that the widths would also be very similar at a point 10 cm from the fingertip (19 mm according to Prospect's data). However, at the 10 cm distance, the 15-month-old's cross-sectional width could be estimated to be slightly greater than that of the two-year-old, because that point falls closer to the wrist of the older child, while falling somewhat beyond the wrist, on a thicker part of the forearm of the younger child, due to the somewhat shorter length of the younger child's hand and forearm. Based upon this information, we are adopting a dimension of 20 mm (measured at 10 cm from the fingertip) for the test rod as part of this final rule, which reflects our assumption that the cross-sectional width of a 15-month-old would be 1 mm greater than the 19 mm measurement provided by Prospects for a two-year-old.

Although a test rod with a cylindrical shape and a continuous diameter of 20 mm is a reasonable representation of the predominant reflective area of a small child's hand and arm, we decided that unmodified, it would not be sufficiently realistic, because it would lack the dimensional features to represent a small child's fingers. A child's finger or, more appropriately, the cross-section of a child's hand profile measured at the fingers, is much smaller than 20 mm. Therefore, in order to better simulate a child's hand, we are specifying in the final rule that the test rod will have a smaller diameter at one end. The length of this reduced-diameter section is to be 40 mm, which is equivalent to the length of a 15-month-old's longest finger, according to the data provided by Prospects.

However, further analysis was necessary to determine the diameter of that narrower section of the test rod. While the diameter of a 15-month-old's finger averages 8 mm, we have decided that a somewhat larger diameter would be appropriate, taking into account the contribution of hand coverings (*e.g.*, gloves) to the overall hand profile size. Our analysis of the effect of hand coverings is discussed immediately below.

3. Effect of Hand Coverings on Test Rod Size

Our next step in determining the parameters of an appropriate test rod for testing IR-based automatic reversal systems involved taking into account the additional thickness resulting from fabric that might cover a child's arm or hand (*e.g.*, gloves, long shirt sleeves). Previously discussed dimension represented values for bare skin, but added thickness could be substantial for loose-fitting articles of clothing. Even thin, snug-fitting fabrics could be expected to add between 2 mm to 3 mm of cross-sectional area.

Based upon the information before us, we have decided to add 2 mm to the 8 mm width that is representative of a 15-month-old child's bare fingers. Thus, the resulting profile dimension of the smaller diameter portion of the test rod is set at 10 mm, as shown in Figure 3. We believe that such dimension would simulate the worst-case scenario of a

[13] See ''Anthropometry of U.S. Infants and Children,'' Society of Automotive Engineers (SAE) SP–394 (1975) (Instructions on how to view a copy of this document are provided at Docket No. NHTSA–2004–18944–16).

small child's hand covered in a thin fabric.

Although these diameter measures are arguably the most critical aspect of the test rod's design, we have also specified length requirement for the various segments of the test rod as follows. We have determined that the length of small diameter section (representing the finger) should be 40 mm in length, which is derived from the data provided by the petitioner for a 15-month-old child. For the thicker part of the test rod (representing the arm), we have determined that the length should be 300 mm. An additional, undefined length would be permitted, in order for the test rod to be hand-held during a test without the test operator's own hand interfering with the test or influencing the amount of reflected infrared energy.

4. Other Test Rod Reflectance Considerations and the Effects of Hand Coverings

In addition to the dimensions of the test rod, another factor that has a significant bearing on an IR-based system's detection capabilities is the infrared reflectance of the obstacle. As discussed previously, some fabrics that might cover hands may have a lower IR reflectance than bare skin. Therefore, in order to be representative of actual conditions, test rods would need to have reflectance corresponding to either an uncovered hand (*i.e.*, bare skin) or a hand covered in fabric. The reflectance value of any fabric by itself is irrelevant, as power window on fabric alone would not be expected to result in injury.

In setting a reflectance value for the test rod, we sought a value that represents the worst case likely to be encountered in the real world. When petitioner's test fabric with the lowest reflectance value (*i.e.*, a black 35-percent cotton/65-percent polyester fabric with a 0.7 percent reflectance) was measured over bare skin using the original test procedure and apparatus, the resulting combination had a reflectance of approximately 1 percent. Bare skin, in contrast, had about a 2-percent reflectance.

Based upon this data, we are adopting a 1-percent surface reflectance as the minimum for rods used for testing IR reflectance systems. We have decided that the 1 percent value for the fabric-covered hand constitutes the appropriate specification for the safety standard, because it represent the worst case scenario relevant to the injury prevention purpose of FMVSS No. 118.

We disagree with Prospect's assertion that thin black polyester/cotton fabric (0.7 percent reflectance) and thin black wool material are not appropriate choices in setting an appropriate lower limit on relative IR reflectance of test rod materials. Although evidence has not been presented regarding the likelihood of such materials being worn on the hands, the possibility exists. For example, such fabrics may be used in children's costumes or ''dress up'' clothing, or in other cases, sleeves may be worn long, draping over a child's hands. Accordingly, we believe that an IR-based system may encounter thin black polyester/cotton fabric, so the system should be sufficiently sensitive to detect a target with a 0.7 percent IR reflectance.

It should be noted that we have decided to apply the 1 percent reflectance specification to the entire test rod, which would represent a forearm and hand covered by thin, low-reflectance fabric. We acknowledge that the diameter of the wider portion of the test rod assumed an uncovered forearm. However, for practical considerations, we have decided to adopt a 1 percent reflectance value for the entire test rod, without the slight size increase that the fabric would contribute.

We reason that producing a test rod that has different reflectances for its larger and smaller diameter segments would be difficult and potentially costly. By contrast, test rods with uniform reflectance should be easily obtainable. Further, we believe that uniform test rod reflectance may enhance the margin of safety under the standard.

5. Need for Reversal

We have decided to change our approach related to the need for reversal of IR reflectance-based systems under S5. Upon further consideration, we can envision certain worst-case situations, in which the size, orientation, reflectance, and location of a small child's hand could combine in a way that the IR-based system could potentially trap the hand, in which case it would be necessary for the window's motion to be reversed, rather than simply stopped. Therefore, we have decided that, as an extra safeguard, it would be advantageous to safety to require that all systems, regardless of detection method, reverse the window to one of the required positions upon detection of an obstacle. We believe that this change will not impose a significant burden on manufacturers, because reversal of the window, as opposed to halting it, should entail only minor changes in the power window circuitry. Further, this modification will simplify the standard by eliminating differences in performance requirements for different types of systems.

6. Powered Roof Panels and Partitions

We note here that the same rationale discussed above also applies to powered roof panels (sun roofs) and interior partitions, which are similar to power windows in their operation. The primary difference is that they normally operate in planes of motion that are at right angles to powered side windows in motor vehicles.

However, powered interior partitions present a special case, because they can have occupant compartment space on both sides of the partition. Therefore, it is necessary to require that interior partitions be capable of reversing when obstacles (*e.g.*, test rods) enter from either side of the partition. Accordingly, we have decided to include a requirement as part of this final rule that would account for powered interior partitions equipped with IR reflection sensing.

7. Other Issues

At least one commenter raised the issue of a fail-safe design requirement. Although fail-safe operation may be a useful aspect of power window design, we are not including a fail-safe requirement as part of this final rule. The standard does not currently contain a fail-safe requirement for any type of power window system, and there is not any specific reason to believe that the reliability of an IR reflectance automatic reversal system would be different from that of a contact/force sensing system. Thus, we believe that adopting a fail-safe requirement would unnecessarily add to the scope of the standard and increase burdens.

Regarding the issue of electromagnetic interference, we note that in theory, such interference has the potential to affect a variety of vehicle systems (*e.g.*, the air bag system). However, the agency has not received any information that would support setting a specific tolerance level as part of this rulemaking.

Regarding comments on the express-up operation of side windows, we believe that some of these comments demonstrate a misunderstanding of the current requirements of FMVSS No. 118. The current standard does not distinguish express-up operation from other permissible closure modes, except that S4 prohibits one-touch activation by remote or exterior controls. Currently, power windows equipped with an express-up feature must meet either the requirements of S4 or S5. The NPRM asked questions about ignition switch settings, lock-out of rear seat power windows, and express-up operation, in order to provide

information that may be relevant to future rulemakings. However, in issuing this final rule, we are not amending any of the existing requirements or establishing any new requirements related to ignition switch settings, driver-controlled lock-out, or express-up operation.

VI. Effective Date

The amendments to FMVSS No. 118 contained within this final rule are effective September 1, 2005. Voluntary compliance is permitted before that date. We have determined that this timeframe is appropriate because this final rule does not change any substantive requirements of the standard, but instead, it offers an additional option for compliance under Standard No. 118 based upon new technology.

We note that the NPRM originally contemplated an effective date 30 days after publication of the final rule. However, in recognition of the fact that this final rule adopts new test procedures specific to power window automatic reversal systems based upon infrared reflectance technology, we have decided to grant lead time until September 1, 2005, for manufacturers who choose to equip vehicles with such systems. Accordingly, vehicles equipped with automatic reversal systems using IR reflectance technology that are certified under S5 must meet the requirements of S5.3 no later than that date. Voluntary compliance is permitted prior to that date.

VII. Benefits

As noted above, this final rule amends FMVSS No. 118 to permit automatic reversal systems based upon infrared reflectance, a new technology. Because these IR-based systems are expected to meet the same functional requirements of other automatic reversal systems (although in a different manner), the standard's overall level of benefits is expected to remain unchanged. It is possible that there may be some marginal additional benefit provided by these systems, in that they may stop and reverse a window prior to any contact (thereby preventing any pinching), but such benefits are difficult to quantify.

VIII. Costs

Because IR-based automatic power window reversal systems are not required under FMVSS No. 118, there are not expected to be any compliance costs associated with this final rule. Manufacturers are not required to install automatic reversal systems, and if they do, they are free to utilize any permissible technology under paragraph S5 of the standard.

IX. Rulemaking Analyses and Notices

A. Executive Order 12866 and DOT Regulatory Policies and Procedures

Executive Order 12866, ''Regulatory Planning and Review'' (58 FR 51735, October 4, 1993), provides for making determinations whether a regulatory action is ''significant'' and therefore subject to OMB review and to the requirements of the Executive Order. The Order defines a ''significant regulatory action'' as one that is likely to result in a rule that may:

(1) Have an annual effect on the economy of $100 million or more or adversely affect in a material way the economy, a sector of the economy, productivity, competition, jobs, the environment, public health or safety, or State, local, or Tribal governments or communities;

(2) Create a serious inconsistency or otherwise interfere with an action taken or planned by another agency;

(3) Materially alter the budgetary impact of entitlements, grants, user fees, or loan programs or the rights and obligations of recipients thereof; or

(4) Raise novel legal or policy issues arising out of legal mandates, the President's priorities, or the principles set forth in the Executive Order.

This rulemaking document was not reviewed under E.O. 12866. Further, this action has been determined to be ''non-significant'' under the Department of Transportation's Regulatory Policies and Procedures. The amendments to FMVSS No. 118 contained in this final rule do not impose any new requirements, but simply provide appropriate test procedures for a new technology, thereby allowing manufacturers to certify vehicles employing that technology as meeting the existing requirements of the standard. Therefore, the impacts of these amendments are so minimal that a full regulatory evaluation is not required.

B. Regulatory Flexibility Act

Pursuant to the Regulatory Flexibility Act (5 U.S.C. 601 *et seq.*, as amended by the Small Business Regulatory Enforcement Fairness Act (SBREFA) of 1996), whenever an agency is required to publish a notice of rulemaking for any proposed or final rule, it must prepare and make available for public comment a regulatory flexibility analysis that describes the effect of the rule on small entities (*i.e.*, small businesses, small organizations, and small governmental jurisdictions). The Small Business Administration's regulations at 13 CFR part 121 define a small business, in part, as a business entity ''which operates primarily within the United States.'' (13 CFR 121.105(a)). No regulatory flexibility analysis is required if the head of an agency certifies the rule will not have a significant economic impact on a substantial number of small entities. SBREFA amended the Regulatory Flexibility Act to require Federal agencies to provide a statement of the factual basis for certifying that a rule will not have a significant economic impact on a substantial number of small entities.

NHTSA has considered the effects of this final rule under the Regulatory Flexibility Act. I certify that this final rule will not have a significant economic impact on a substantial number of small entities. The rationale for this certification is that the rule does not impose any new requirements, but instead relieves a restriction resulting from a lack of specificity in the current requirement. Further, the infrared sensing technologies that will be permitted as a result of this final rule are only likely to be offered on a small number of vehicles produced by major automobile manufacturers.

C. Executive Order 13132 (Federalism)

Executive Order 13132, ''Federalism'' (64 FR 43255, August 10, 1999), requires NHTSA to develop an accountable process to ensure ''meaningful and timely input by State and local officials in the development of regulatory policies that have federalism implications.'' ''Policies that have federalism implications'' are defined in the Executive Order to include regulations that have ''substantial direct effects on the States, on the relationship between the national government and the States, or on the distribution of power and responsibilities among the various levels of government.'' Under Executive Order 13132, the agency may not issue a regulation with federalism implications, that imposes substantial direct compliance costs, and that is not required by statute, unless the Federal government provides the funds necessary to pay the direct compliance costs incurred by State and local governments, the agency consults with State and local governments, or the agency consults with State and local officials early in the process of developing the proposed regulation. NHTSA also may not issue a regulation with federalism implications and that preempts a State law unless the agency consults with State and local officials

early in the process of developing the regulation.

NHTSA has analyzed this final rule in accordance with the principles and criteria contained in E.O. 13132 and has determined that the rule will not have sufficient federalism implications to warrant consultations with State and local officials or the preparation of a federalism summary impact statement. This final rule will not have any substantial effects on the States, or on the current distribution of power and responsibilities among the various local officials.

D. Executive Order 12988 (Civil Justice Reform)

Pursuant to Executive Order 12988, ''Civil Justice Reform'' (61 FR 4729, February 7, 1996), the agency has considered whether this rulemaking will have any retroactive effect. This final rule does not have any retroactive effect. Under 49 U.S.C. 30103, whenever a Federal motor vehicle safety standard is in effect, a State may not adopt or maintain a safety standard applicable to the same aspect of performance which is not identical to the Federal standard, except to the extent that the State requirement imposes a higher level of performance and applies only to vehicles procured for the State's use. 49 U.S.C. 30161 sets forth a procedure for judicial review of final rules establishing, amending, or revoking Federal motor vehicle safety standards. That section does not require submission of a petition for reconsideration or other administrative proceedings before parties may file a suit in court.

E. Executive Order 13045 (Protection of Children From Environmental Health and Safety Risks)

Executive Order 13045, ''Protection of Children from Environmental Health and Safety Risks'' (62 FR 19855, April 23, 1997), applies to any rule that: (1) Is determined to be ''economically significant'' as defined under Executive Order 12866, and (2) concerns an environmental, health, or safety risk that the agency has reason to believe may have a disproportionate effect on children. If the regulatory action meets both criteria, the agency must evaluate the environmental health or safety effects of the planned rule on children, and explain why the planned regulation is preferable to other potentially effective and reasonably feasible alternatives considered by the agency.

Although this final rule is expected to have a positive safety impact on children, it is not an economically significant regulatory action under Executive Order 12866. Consequently, no further analysis is required under Executive Order 13045.

F. Paperwork Reduction Act

Under the Paperwork Reduction Act of 1995 (PRA), a person is not required to respond to a collection of information by a Federal agency unless the collection displays a valid OMB control number. There are not any information collection requirements associated with this final rule.

G. National Technology Transfer and Advancement Act

Section 12(d) of the National Technology Transfer and Advancement Act of 1995 (NTTAA), Public Law 104–113, (15 U.S.C. 272) directs the agency to evaluate and use voluntary consensus standards in its regulatory activities unless doing so would be inconsistent with applicable law or is otherwise impractical. Voluntary consensus standards are technical standards (*e.g.*, materials specifications, test methods, sampling procedures, and business practices) that are developed or adopted by voluntary consensus standards bodies, such as the Society of Automotive Engineers (SAE). The NTTAA directs us to provide Congress (through OMB) with explanations when the agency decides not to use available and applicable voluntary consensus standards. The NTTAA does not apply to symbols.

Currently, there are no voluntary consensus standards specifically addressing infrared reflectance-based automatic reversal systems for power-operated window and their unique operating characteristics. However, NHTSA will consider any such standards as they become available.

H. Unfunded Mandates Reform Act

Section 202 of the Unfunded Mandates Reform Act of 1995 (UMRA) requires federal agencies to prepare a written assessment of the costs, benefits, and other effects of proposed or final rules that include a Federal mandate likely to result in the expenditure by State, local, or tribal governments, in the aggregate, or by the private sector, of more than $100 million annually (adjusted for inflation with base year of 1995). Before promulgating a NHTSA rule for which a written statement is needed, section 205 of the UMRA generally requires the agency to identify and consider a reasonable number of regulatory alternatives and adopt the least costly, most cost-effective, or least burdensome alternative that achieves the objectives of the rule. The provisions of section 205 do not apply when they are inconsistent with applicable law. Moreover, section 205 allows the agency to adopt an alternative other than the least costly, most cost-effective, or least burdensome alternative if the agency publishes with the final rule an explanation of why that alternative was not adopted.

This final rule will not result in the expenditure by State, local, or tribal governments or the private sector, in the aggregate, or more than $100 million annually. Thus, this final rule is not subject to the requirements of sections 202 and 205 of the UMRA.

I. National Environmental Policy Act

NHTSA has analyzed this rulemaking action for the purposes of the National Environmental Policy Act. The agency has determined that implementation of this action will not have any significant impact on the quality of the human environment.

J. Regulatory Identifier Number (RIN)

The Department of Transportation assigns a regulation identifier number (RIN) to each regulatory action listed in the Unified Agenda of Federal Regulations. The Regulatory Information Service Center publishes the Unified Agenda in April and October of each year. You may use the RIN contained in the heading at the beginning of this document to find this action in the Unified Agenda.

K. Privacy Act

Please note that anyone is able to search the electronic form of all comments received into any of our dockets by the name of the individual submitting the comment (or signing the comment, if submitted on behalf of an association, business, labor union, etc.). You may review DOT's complete Privacy Act Statement in the **Federal Register** published on April 11, 2000 (volume 65, number 70; pages 19477–78), or you may visit *http://dms.dot.gov.*

List of Subjects in 49 CFR Part 571

Imports, Motor vehicle safety, Reporting and recordkeeping requirements, Tires.

■ In consideration of the foregoing, NHTSA is amending 49 CFR part 571 as follows:

PART 571—FEDERAL MOTOR VEHICLE SAFETY STANDARDS

■ 1. The authority citation for Part 571 of Title 49 continues to read as follows:

Authority: 49 U.S.C. 322, 30111, 30115, 30117, and 30166; delegation of authority at 49 CFR 1.50.

■ 2. Section 571.118 is amended as follows:

■ A. In S3, by revising the heading and adding a definition for ''infrared reflectance'' in alphabetical order;

■ B. By revising S5; and

■ C. By adding new paragraphs S5.1, S5.2, S5.3, S7, S7.1, S7.2, S8, S8.1, S8.2, S8.3, S9, Figure 2 and Figure 3.

The revised and added text reads as follows:

571.118 Standard No. 118; Power-operated window, partition, and roof panel systems.

* * * * *

S3. Definitions.

* * * * *

''Infrared reflectance'' means the ratio of the intensity of infrared light reflected and scattered by a flat sample of the test rod material to the intensity of infrared light reflected and scattered by a mirror that reflects 99.99 percent of the infrared radiation incident on its surface as measured by the apparatus show in Figure 2.

* * * * *

S5. *Automatic reversal systems.* A power-operated window, partition, or roof panel system that is capable of closing or of being closed under any circumstances other than those specified in S4 shall meet the requirements of S5.1, S5.2, and, if applicable, S5.3.

S5.1. While closing, the power-operated window, partition, or roof panel shall stop and reverse direction either before contacting a test rod with properties described in S8.2 or S8.3, or before exerting a squeezing force of 100 newtons (N) or more on a semi-rigid cylindrical test rod with the properties described in S8.1, when such test rod is placed through the window, partition, or roof panel opening at any location in the manner described in the applicable test under S7.

S5.2. Upon reversal, the power-operated window, partition, or roof panel system must open to one of the following positions, at the manufacturer's option:

(a) A position that is at least as open as the position at the time closing was initiated;

(b) A position that is not less than 125 millimeters (mm) more open than the position at the time the window reversed direction; or

(c) A position that permits a semi-rigid cylindrical rod that is 200 mm in diameter to be placed through the opening at the same location as the rod described in S7.1 or S7.2(b).

S5.3. If a vehicle uses proximity detection by infrared reflection to stop and reverse a power-operated window, partition, or roof panel, the infrared source shall project infrared light at a wavelength of not less than 850 nm and not more than 1050 nm. The system shall meet the requirements in S5.1 and S5.2 in all ambient light conditions from total darkness to 64,500 lux (6,000 foot candles) incandescent light intensity.

* * * * *

S7. *Test procedures.*

S7.1. *Test procedure for testing power-operated window, partition, or roof panel systems designed to detect obstructions by physical contact or by light beam interruption:* Place the test rod of the type specified in S8.1 or S8.2, as appropriate, through the window, partition, or roof panel opening from the inside of the vehicle such that the cylindrical surface of the rod contacts any part of the structure with which the window, partition, or roof panel mates. Typical placements of test rods are illustrated in Figure 1. Attempt to close the power window, partition, or roof panel by operating the actuation device provided in the vehicle for that purpose.

S7.2. *Test procedure for testing power-operated window, partition, or roof panel systems designed to detect the proximity of obstructions using infrared reflectance:*

(a) Place the vehicle under incandescent lighting that projects 64,500 lux (6,000 foot candles) onto the infrared sensor. The light is projected onto the infrared sensor by aiming the optical axis of a light source outside the vehicle as perpendicular as possible to the lens of the infrared sensor. The intensity of light is measured perpendicular to the plane of the lens of the infrared sensor, as close as possible to the center of the lens of the infrared sensor.

(b) Place a test rod of the type specified in S8.3 in the window, partition, or roof panel opening, with the window, partition, or roof panel in any position. While keeping the rod stationary, attempt to close the window, partition, or roof panel by operating the actuation device provided in the vehicle for that purpose. Remove the test rod. Fully open the window, partition, or roof panel, and then begin to close it. While the window, partition, or roof panel is closing, move a test rod so that it approaches and ultimately extends through (if necessary) the window, partition, or roof panel opening, or its frame, in any orientation from the interior of the vehicle. For power partitions that have occupant compartment space on both sides of the partition, move the test rod into the partition opening from either side of the partition.

(c) Repeat the steps in S7.2(a) and (b) with other ambient light conditions within the range specified in S5.3.

S8. *Test rods.*

S8.1. *Rods for testing systems designed to detect obstructions by physical contact:*

(a) Each test rod is of cylindrical shape with any diameter in the range from 4 mm to 200 mm and is of sufficient length that it can be hand-held during the test specified in S7 with only the test rod making any contact with any part of the window, partition, or roof panel or mating surfaces of the window, partition, or roof panel.

(b) Each test rod has a force-deflection ratio of not less than 65 N/mm for rods 25 mm or smaller in diameter, and not less than 20 N/mm for rods larger than 25 mm in diameter.

S8.2. *Rods for testing systems designed to detect obstructions by light beam interruption:* Each test rod has the shape and dimensions specified in S8.1 and is, in addition, opaque to infrared, visible, and ultraviolet light.

S8.3. *Rods for testing systems designed to detect the proximity of obstructions using infrared reflection:*

(a) Each rod is constructed so that its surface has an infrared reflectance of not more than 1.0 percent when measured by the apparatus in Figure 2, in accordance with the procedure in S9.

(b) Each rod has the shape and dimensions specified in Figure 3.

S9. *Procedure for measuring infrared reflectance of test rod surface material.*

(a) The infrared reflectance of the rod surface material is measured using a flat sample and an infrared light source and sensor operating at a wavelength of 950 ± 100 nm.

(b) The intensity of incident infrared light is determined using a reference mirror of nominally 100 percent reflectance mounted in place of the sample in the test apparatus in Figure 2.

(c) Infrared reflectance measurements of each sample of test rod surface material and of the reference mirror are corrected to remove the contribution of infrared light reflected and scattered by the sample holder and other parts of the apparatus before computation of the infrared reflectance ratio.

* * * * *

BILLING CODE 4910–59–P

FIGURE 2 - REFLECTANCE TEST APPARATUS

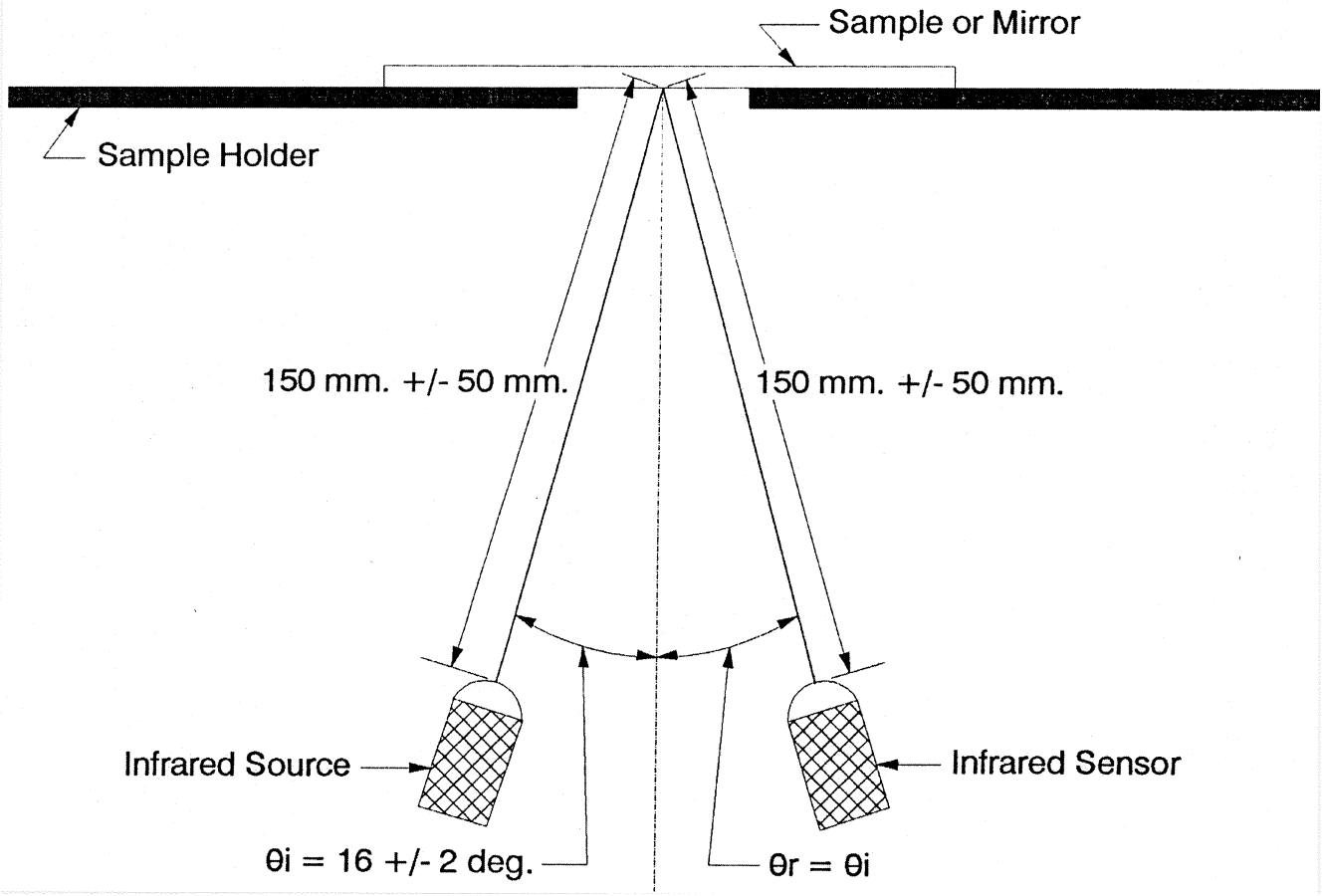

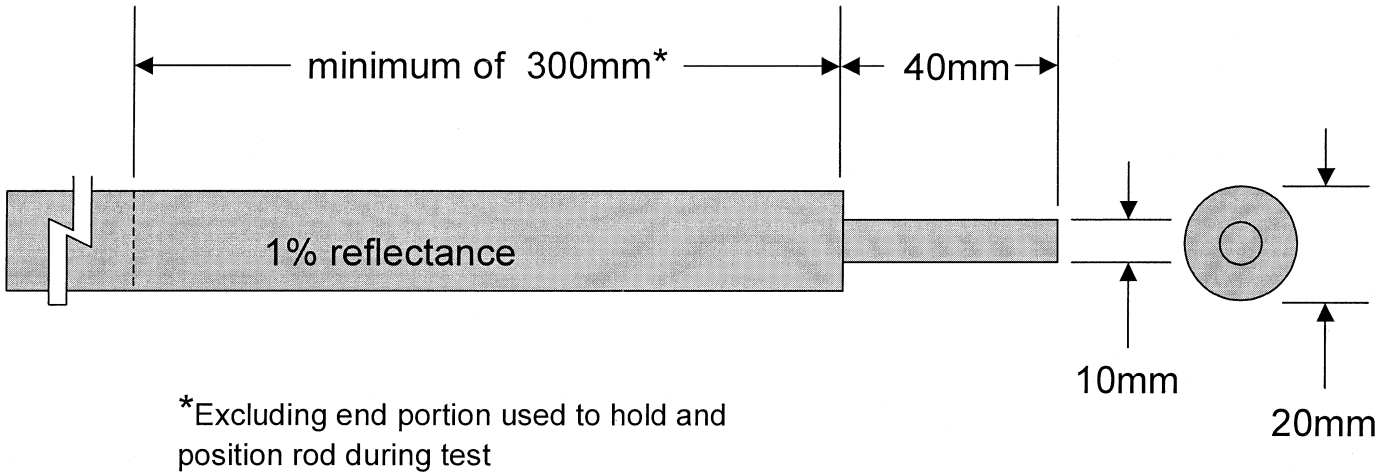

Figure 3

Cylindrical Rod

for Testing Non-Contact Infrared Reflection Systems

Issued: September 8, 2004.

Jeffrey W. Runge,

Administrator.

[FR Doc. 04–20719 Filed 9–14–04; 8:45 am]

BILLING CODE 4910–59–C

Proposed Rules

Federal Register

Vol. 69, No. 178

Wednesday, September 15, 2004

This section of the FEDERAL REGISTER contains notices to the public of the proposed issuance of rules and regulations. The purpose of these notices is to give interested persons an opportunity to participate in the rule making prior to the adoption of the final rules.

ENVIRONMENTAL PROTECTION AGENCY

40 CFR Part 136

[FRL–7813–5]

Potential Stakeholder Process for Detection and Quantitation Procedures

AGENCY: Environmental Protection Agency (EPA).

ACTION: Notice of proposed rule.

SUMMARY: This document announces EPA's intent to explore the feasibility and design of a process through which stakeholders could provide their ideas and recommendations on procedures for the development of detection and quantitation limits and uses of these limits in Clean Water Act (CWA) programs.

FOR FURTHER INFORMATION CONTACT: Marion Kelly: Engineering and Analysis Division (4303T); Office of Science and Technology; Office of Water; U.S. Environmental Protection Agency; Ariel Rios Building; 1200 Pennsylvania Avenue NW., Washington, DC 20460, or call (202) 566–1045 or E-mail at *kelly.marion@epa.gov.*

SUPPLEMENTARY INFORMATION: EPA approves analytical methods (*i.e.*, test procedures) used for monitoring and reporting chemical pollutants under the CWA. EPA's analytical methods specify detection limits to determine if a pollutant is present. Quantitation limits describe the concentration of a pollutant that can be measured with a known level of confidence. These values are often used as reporting and compliance limits by the States, Tribes and EPA Regions that administer and enforce permit limits on direct discharges into water. These values are also often used by States and localities in administering and enforcing pretreatment programs for indirect discharges.

EPA published two documents in the **Federal Register** on this topic on March 12, 2003, for public comment. One document announced the availability of EPA's assessment of detection and quantitation procedures that are applied to analytical methods used under the CWA (68 FR 11791). The second document proposed revisions to the detection and quantitation definitions and procedures specified at 40 CFR part 136 (68 FR 11770). The proposed regulatory revisions were based largely on the results of the assessment and on comments from users of the method detection limit procedure. Further analysis of some of the public comments, prompted EPA to explore the feasibility and design of a stakeholder process to obtain additional stakeholder input on procedures for the development of detection and quantitation limits and uses of these limits in CWA programs.

The Agency is beginning the process to engage a neutral third party to conduct a situation assessment to determine whether a stakeholder process should go forward and, if so, how that process should be designed. During a situation assessment, the neutral third party talks with affected stakeholders about their ideas for the design of multi-party discussions on the policy and technical issues. As a result of these discussions, EPA expects the neutral third party to make recommendations about the feasibility and design of a stakeholder process, including format, schedule, and topics for discussion. If the neutral third party recommends that a stakeholder process is feasible, EPA will, as soon as possible, implement a process during which stakeholders could provide their ideas and recommendations on procedures for the development of detection and quantitation limits and uses of these limits in CWA programs. We estimate that the neutral third party's recommendations will probably be available in November 2004.

EPA plans to post the final situation assessment report on the EPA Web site at *http://www.epa.gov/waterscience/methods/det/index.html*

Dated: September 9, 2004.

Benjamin H. Grumbles,

Acting Assistant Administrator for Water.

[FR Doc. 04–20795 Filed 9–14–04; 8:45 am]

BILLING CODE 6560–50–P

FEDERAL COMMUNICATIONS COMMISSION

47 CFR Part 73

[DA 04–2859; MB Docket No. 04–348, RM–10718; MB Docket No. 04–349, RM–10827; MB Docket No. 04–350, RM–10815; MB Docket No. 04–351, RM–10828]

Radio Broadcasting Services; Cross Plains, TX; Fernley, NV; Oroville, CA and Pittsburg, OK

AGENCY: Federal Communications Commission.

ACTION: Proposed rule.

SUMMARY: This document proposes four new allotments in Cross Plains, Texas, Fernley, Nevada, Oroville, California and Pittsburg, Oklahoma. The Audio Division requests comment on a petition filed by Charles Crawford proposing the allotment of Channel 294A at Cross Plains, Texas, as the community's first local aural transmission service. Channel 294A can be allotted to Cross Plains in compliance with the Commission's minimum distance separation requirements with a site restriction of 14 kilometers (8.7 miles) west to avoid a short-spacing to the license sites of FM Stations KKHR, Channel 292C2, Abilene, Texas and KKDL, Channel 294C, Muenster, Texas. The reference coordinates for Channel 294A at Cross Plains are 32–06–48 NL and 99–18–45 WL. *See* Supplementary Information, *infra.*

DATES: Comments must be filed on or before October 25, 2004, and reply comments on or before November 9, 2004.

ADDRESSES: Federal Communications Commission, 445 Twelfth Street, SW., Washington, DC 20554. In addition to filing comments with the FCC, interested parties should serve the petitioner, his counsel, or consultant, as follows: Charles Crawford, 4553 Bordeaux Avenue, Dallas, TX 75205 and Linda A. Davidson, 2134 Oak Street, Unit C, Santa Monica, California 90405.

FOR FURTHER INFORMATION CONTACT: Rolanda F. Smith, Media Bureau, (202) 418–2180.

SUPPLEMENTARY INFORMATION: This is a synopsis of the Commission's Notice of Proposed Rule Making, MB Docket Nos. 04–348, 04–349, 04–350, 04–351, adopted September, 2004 and released September, 2004. The full text of this

Commission decision is available for inspection and copying during regular business hours at the FCC's Reference Information Center, Portals II, 445 Twelfth Street, SW., Room CY–A257, Washington, DC 20554. The complete text of this decision may also be purchased from the Commission's duplicating contractor, Best Copy and Printing, Inc., 445 12th Street, SW., Room CY–B402, Washington, DC 20054, telephone 1–800–378–3160 or *www.BCPIWEB.com.*

The Audio Division requests comments on a petition filed by Linda A. Davidson proposing the allotment of Channel 231C3 at Fernley, Nevada, as the community's first local aural transmission service. Channel 231C3 can be allotted to Fernley in compliance with the Commission's minimum distance separation requirements with a site restriction of 9 kilometers (5.6 miles) east to avoid a short-spacing to the license site of FM Station KHXR, Channel 233C2, Sun Valley, Nevada. The reference coordinates for Channel 231C3 at Fernley are 39–37–00 North Latitude and 119–08–51 West Longitude.

The Audio Division requests comments on a petition filed by Linda A. Davidson proposing the allotment of Channel 272A at Oroville, California, as the community's second local aural transmission service. Channel 272A can be allotted to Oroville in compliance with the Commission's minimum distance separation requirements with a site restriction of 9.4 kilometers (5.8 miles) north to avoid short-spacing to the license sites of FM Stations KCEZ, Channel 271B1, Los Molin, California and KSFM, Channel 273B, Woodland, California. The reference coordinates for Channel 272A at Oroville are 39–35–51 North Latitude and 121–34–11 West Longitude.

The Audio Division requests comment on a petition filed by Charles Crawford proposing the allotment of Channel 232A at Pittsburg, Oklahoma, as the community's first local aural transmission service. Channel 232A can be allotted to Pittsburg in compliance with the Commission's minimum distance separation requirements with a site restriction of 13.5 kilometers (8.4 miles) east to avoid a short-spacing to the license site of FM Station KTSO, Channel 231C1, Glenpool, Oklahoma. The reference coordinates for Channel 232A at Pittsburg are 34–41–15 North Latitude and 95–42–19 West Longitude. To accommodate the Pittsburg allotment, Petitioner proposes the relocation of the reference coordinates for vacant Channel 232A at Cove, Arkansas. The proposed reference coordinates are 34–21–00 NL and 94–30–00 WL. This proposed site is 12.5 kilometers (7.8 miles) southwest of Cove.

Provisions of the Regulatory Flexibility Act of 1980 do not apply to this proceeding.

Members of the public should note that from the time a Notice of Proposed Rule Making is issued until the matter is no longer subject to Commission consideration or court review, all *ex parte* contacts are prohibited in Commission proceedings, such as this one, which involve channel allotments. See 47 CFR 1.1204(b) for rules governing permissible *ex parte* contact.

For information regarding proper filing procedures for comments, see 47 CFR 1.415 and 1.420.

List of Subjects in 47 CFR Part 73

Radio, Radio broadcasting.

For the reasons discussed in the preamble, the Federal Communications Commission proposes to amend 47 CFR Part 73 as follows:

PART 73—RADIO BROADCAST SERVICES

1. The authority citation for part 73 continues to read as follows:

Authority: 47 U.S.C. 154, 303, 334 and 336.

§ 73.202 [Amended]

2. Section 73.202(b), the Table of FM Allotments under California, is amended by adding Channel 272A at Oroville.

3. Section 73.202(b), the Table of FM Allotments under Nevada, is amended by adding Fernley, Channel 231C3.

4. Section 73.202(b), the Table of FM Allotments under Oklahoma, is amended by adding Pittsburg, Channel 232A.

5. Section 73.202(b), the Table of FM Allotments under Texas, is amended by adding Cross Plains, Channel 294A.

Federal Communications Commission.

John A. Karousos,

Assistant Chief, Audio Division, Media Bureau.

[FR Doc. 04–20787 Filed 9–14–04; 8:45 am]

BILLING CODE 6712–01–P

DEPARTMENT OF TRANSPORTATION

National Highway Traffic Safety Administration

49 CFR Part 571

[Docket No. NHTSA 98–3967; Notice 2]

RIN 2127–AG88

Federal Motor Vehicle Safety Standards; Lamps, Reflective Devices, and Associated Equipment

AGENCY: National Highway Traffic Safety Administration (NHTSA), DOT.

ACTION: Withdrawal of rulemaking.

SUMMARY: This document withdraws a rulemaking to amend the Federal motor vehicle safety standard on lighting as it applies to light emitting diode (LED) signal lamps. In 1998, the agency proposed to amend the standard by adding new paragraphs reflecting Society of Automotive Engineers (SAE) specifications for measurement of photometrics in LED lamps with more than one lighted section, and for LED signal lamp heat testing. For reasons discussed in this document, the agency is withdrawing this rulemaking.

FOR FURTHER INFORMATION CONTACT: For technical issues: Mr. Richard Van Iderstine, Office of Crash Avoidance Standards, National Highway Traffic Safety Administration, 400 7th Street, SW., Washington, DC 20590. Telephone: (202) 366–2720. Fax: (202) 366–7002.

For legal issues: Mr. George Feygin, Attorney Advisor, Office of the Chief Counsel, NCC–112, National Highway Traffic Safety Administration, 400 7th Street, SW., Washington, DC 20590. Telephone: (202) 366–5834. Fax: (202) 366–3820. E-Mail: *George.Feygin@nhtsa.dot.gov.*

SUPPLEMENTARY INFORMATION:

I. Background

On April 8, 1994, NHTSA published a notice of proposed rulemaking (NPRM) to amend FMVSS No. 108, *Lamps, Reflective Devices, and Associated Equipment*, to relieve design restrictions that may have inadvertently prevented the implementation of certain ''new-technology'' light sources such as LEDs.[1] In response, we received comments indicating that it was premature for the agency to specify unique requirements for lamps equipped with these light sources until further research could be completed to assess conspicuity and other issues. We

[1] See 59 FR 16788.

withdrew the rulemaking on June 19, 1995.[2]

On February 6, 1997, Reitter & Schefenacker GmbH & Co. KG (Schefenacker) petitioned the agency to reexamine this issue once again and amend the standard as it applies to photometrics of signal lamps with LEDs. Specifically, the petitioner argued that the standard imposes unnecessary design restrictions on LED signal lamps because, as explained in greater detail below, lamps that use LEDs are usually subject to the requirements applicable to a three-section lamp. These requirements were said to make it necessary for LED signal lamps to be unnecessarily large. Schefenacker stated that the standard should be amended to account for the different characteristics of LEDs, so that the size of LED signal lamps would be comparable to that of conventional lamps.

On June 24, 1998, we issued an NPRM proposing to amend FMVSS No. 108 so that the standard better addressed LED light sources.[3] Specifically, we proposed to adopt provisions reflecting Society of Automotive Engineers (SAE) Recommended Practices for measurement of photometrics in lamps using LED (and miniature halogen light sources) with more than one lighted section, and for LED lamp heat testing to ensure that an LED lamp could maintain photometric compliance under increased temperature conditions. Neither proposal addressed traditional incandescent light sources.

II. How FMVSS No. 108 Applies to Signal Lamps With Light Emitting Diodes

The current Federal requirements for automotive signal lighting were established in the late 1960s. At that time, only incandescent light sources were used in vehicle signal lighting. However, in the past 20 years, automobile manufacturers have begun to introduce new types of signal light technology. These new lamp technologies include LEDs, miniature halogen bulbs, and other light sources with a limited luminous flux (''limited flux light sources''). The main characteristic of LEDs and other limited flux light sources is that they are generally smaller than conventional incandescent light sources and typically produce a lower light intensity, compared to incandescent light sources. Because of the smaller size and lower light output, multiple LEDs are used within a single lamp subject to the requirements of FMVSS No. 108.

The unique characteristics of LEDs present certain regulatory challenges and potential safety problems. For example, some SAE standards incorporated by reference in Standard No. 108 specify photometric performance requirements whose applicability is based upon whether a lamp has one, two, or three or more lighted sections or bulbs. Usually, an incandescent lamp has one light source. By contrast, an LED lamp often has three or more light sources, and is therefore considered (under the current standard) to be a lamp with three or more lighted sections. Accordingly, a manufacturer of such an LED signal lamp must ensure that the lamp has the light intensity required of a three-section lamp.

With respect to safety, agency research indicates that luminous intensity of LED light sources decreases as ambient temperatures increase. This decrease usually occurs if the lamps are illuminated for a long period of time or if they are operated in a relatively high temperature climate. This is not the case with traditional incandescent light sources.

III. Summary of the NPRM

In the NPRM, we proposed to adopt provisions reflecting Society of Automotive Engineers (SAE) Recommended Practice J1889 OCT93 ''L.E.D. Lighting Devices,'' which distinguished between single section and multi-section lamps based on the projected luminous lens area of the lamp, instead of number of light sources within that lamp. Under the proposed provisions, the LED signal lamps would no longer automatically be considered multi-section lamps. To better address our safety concerns associated with LED lamp behavior in high ambient temperatures, we proposed to adopt provisions from an SAE Recommended Practice J1889 OCT93 test procedure for temperature condition testing of LED light sources. For details on the proposal, please see the NPRM, 63 FR 34350 (June 24, 1998).

IV. Comments in Response to the NPRM

In response to the NPRM, we received comments from 22 entities. Koito Manufacturing Co., Ltd., (Koito), Stanley Electric Co., Ltd., (Stanley), Dialight Corporation (Dialight), Peterson Manufacturing Company, (Peterson), Grote Industries, Inc., (Grote), Hella KG (Hella), AAMA, Toyota Technical Center, USA, Inc., (Toyota), Mitsubishi Motors (Mitsubishi), TSEI, NAL, and Truck-Lite Co., Inc., (Truck-Lite) recommended that NHTSA adopt a different version of the SAE requirement for LED signal lamps. Ichikoh Industries, Ltd., (Ichikoh) and Advocates for Highway and Auto Safety (Advocates) opposed adoption of SAE requirements for LED signal lamps. Advocates suggested that there is no safety justification for adopting the proposed requirements. Further, Advocates recommended regulating the luminance of the lamp itself, without reference to number of sections or lighting sources. Peterson commented that regulating the luminance of the lamps was, in theory, the best way to judge signal lamp performance, but that such a requirement would be difficult to quantify and administer.

Stanley, Dialight, Peterson, Grote, AAMA, Toyota, Mercedes-Benz of North America, Inc., (Mercedes), TSEI, and Truck-Lite favored adopting SAE requirements for heat resistance testing. However, Dialight, Peterson, Grote, TSEI, and Truck-Lite all stated that the SAE procedures called for an unrealistically stringent test that does not accurately test the LED signal lamp performance. Conversely, Relume Corporation (Relume) and Sierra Products (Sierra) commented that LED signal lamp heat testing should be more representative of the environments actually experienced by many vehicles and that the SAE procedures are not realistic or stringent enough.

Dialight, Peterson, Grote, TSEI, NAL, and Truck-Lite made additional comments on the issue of effective projected luminous area of LED signal lamps. Sierra asserted that LEDs used in arrays should be required to use a lens to more evenly distribute the light in order to reduce unwanted glare for other nearby vehicle operators.

Osram Sylvania (Osram), Mitsubishi, Sierra, and Truck-Lite stated that turn signal failure indication requirements for LED lamps should be such that failure should occur when the number of failed light sources is enough to take the lamp out of compliance with Standard No. 108. Dialight, Data Display Products (DDP), Relume, and Sierra commented that manufacturers of LED turn signal lamps should design them to minimize the loss in light output when some of the individual diodes fail. Peterson and TSEI recommended that a lamp be considered to have failed when its intensity has decreased 25 percent. DDP suggested that the lamps indicate failure when the light intensity has dropped 50 percent.

Advocates, Toyota, and Sierra all expressed concern that glare from LEDs is causing problems for nearby vehicle operators. Sierra, as previously described, asked that the agency require a lens over each LED to distribute the

[2] See 60 FR 31939.

[3] See 63 FR 34350.

light more evenly and thus reduce the glare. Toyota stated that the maximum allowable candlepower values were unnecessarily high. It argued that a lamp designed to meet this maximum could create a distraction for a following driver, and that these lamps would still function effectively if lower maximum values were adopted. Toyota has recommended that the current requirements for the aforementioned lamps be lowered to the levels set by the Economic Commission for Europe (ECE). All the ECE maximum requirements are approximately 50 percent less than those in Standard No. 108.

AAMA recommended that the optical axis of a lamp be defined as the centroid. AAMA also recommended that we permit the manufacturer to choose the optical axis of any given lamp based on the design.

V. Agency Decision To Withdraw Rulemaking

After careful consideration, NHTSA has decided to withdraw this rulemaking. With respect to the proposed method of determining the number of lighted sections within one LED signal lamp, NHTSA is concerned that adopting the proposed requirement might result in LED lamps having lower light intensity compared to incandescent lamps with a similar projected luminous lens area. The agency believes that lower light intensity could decrease visibility or confuse vehicle operators by making a normally bright stop lamp appear to be a taillamp. Because of this concern, the agency concludes that adopting the proposed requirements would be inappropriate.

With respect to the proposed LED lamp heat test methods, the agency has concluded that the proposed test is not a good surrogate for the real world performance of LEDs under increased or decreased ambient temperature conditions because the test does not accurately replicate high or low ambient temperatures occurring in various climates throughout U.S. The proposed test would energize the lamp for a period of 30 minutes in order to raise the LED lamp temperature (self-heating) before taking photometric measurements. However, some LED lamps do not necessarily heat up after being energized for an extended period of time. Nevertheless, some of the same lamps respond to low or high ambient temperatures by becoming much brighter or dimmer. Therefore, the agency believes that in order ensure adequate performance of the LED lamps in typical driving environments, it may be necessary to conduct additional research on alternative tests, including testing in a temperature chamber. We note that two comments on the NPRM suggested that testing should be more representative of the real-world environmental conditions vehicles may experience. One commenter provided information on two photometry test procedures, one from the Institute of Transportation Engineers and the other from the California Department of Transportation, which replicate real world temperatures. Transport Canada has also developed test procedures that replicate real world temperatures in a laboratory environment.

We continue to believe that it might be appropriate at some point to adopt new requirements related to LED lamp performance. As to photometric requirements and number of lighted sections, we would want to explore a single requirement equally applicable to LED, incandescent, or any other light sources, that would better relate lamp size to its intensity. As to the LED lamp heat test methods, we would want to explore test procedures that better replicate real-world ambient temperatures.

Given the complexity of the issues involved, however, and considering agency priorities and allocation of limited resources available to best carry out the agency's safety mission, NHTSA has decided, for the reasons discussed above, to withdraw this rulemaking.

Authority: 49 U.S.C. 322, 30111, 30115, 30117, and 30166; delegation of authority at 49 CFR 1.50.

Issued: September 8, 2004.

Stephen R. Kratzke,

Associate Administrator for Rulemaking.

[FR Doc. 04–20720 Filed 9–14–04; 8:45 am]

BILLING CODE 4910–59–P

DEPARTMENT OF TRANSPORTATION

National Highway Traffic Safety Administration

49 CFR Part 572

[Docket No. NHTSA–2004–18864]

RIN 2127–AI89

Anthropomorphic Test Devices; ES–2re Side Impact Crash Test Dummy (ES–2 With Rib Extensions); 50th Percentile Adult Male

AGENCY: National Highway Traffic Safety Administration (NHTSA), Department of Transportation (DOT).

ACTION: Notice of proposed rulemaking (NPRM).

SUMMARY: In May 2004, NHTSA published a notice of proposed rulemaking that proposed to upgrade Federal Motor Vehicle Safety Standard No. 214, ''Side Impact Protection,'' by requiring that all passenger vehicles with a gross vehicle weight rating of 4,536 kilograms (10,000 pounds) or less protect front seat occupants against head, thoracic, abdominal and pelvic injuries in a vehicle-to-pole test simulating a vehicle's crashing sideways into narrow fixed objects like telephone poles and trees. That NPRM proposed that compliance with the pole test would be determined in two test configurations, one using a new, second-generation test dummy representing mid-size adult males and the other using a new test dummy representing small adult females. The NPRM also proposed using the new dummies in the standard's existing vehicle-to-vehicle test that uses a moving deformable barrier to simulate a moving vehicle being struck in the side by another moving vehicle.

Today's NPRM proposes specifications and qualification requirements for the new mid-size adult male crash test dummy. The new 50th percentile adult male side impact test dummy has enhanced injury assessment capabilities compared to devices existing today, which allows for a fuller assessment of the types and magnitudes of the injuries occurring in side impacts and of the efficacy of countermeasures in improving occupant protection.

DATES: You should submit your comments early enough to ensure that Docket Management receives them not later than November 15, 2004.

ADDRESSES: You may submit comments (identified by the DOT DMS Docket Number) by any of the following methods:

- *Web Site: http://dms.dot.gov.* Follow the instructions for submitting comments on the DOT electronic docket site.
- *Fax:* 1–202–493–2251.
- *Mail:* Docket Management Facility; U.S. Department of Transportation, 400 Seventh Street, SW., Nassif Building, Room PL–401, Washington, DC 20590–001.
- *Hand Delivery:* Room PL–401 on the plaza level of the Nassif Building, 400 Seventh Street, SW., Washington, DC, between 9 a.m. and 5 p.m., Monday through Friday, except Federal Holidays.
- *Federal eRulemaking Portal:* Go to *http://www.regulations.gov.* Follow the online instructions for submitting comments.

Instructions: All submissions must include the agency name and docket

number or Regulatory Identification Number (RIN) for this rulemaking. For detailed instructions on submitting comments and additional information on the rulemaking process, see the Public Participation heading of the Supplementary Information section of this document. Note that all comments received will be posted without change to *http://dms.dot.gov,* including any personal information provided. Please see the Privacy Act discussion under the Public Participation heading.

Docket: For access to the docket to read background documents or comments received, go to *http://dms.dot.gov* at any time or to Room PL–401 on the plaza level of the Nassif Building, 400 Seventh Street, SW., Washington, DC, between 9 a.m. and 5 p.m., Monday through Friday, except Federal Holidays.

FOR FURTHER INFORMATION CONTACT: For non-legal issues, you may call Stan Backaitis, NHTSA Office of Crashworthiness Standards (telephone 202–366–4912). For legal issues, you may call Deirdre Fujita, NHTSA Office of Chief Counsel (telephone 202–366–2992). You may send mail to these officials at the National Highway Traffic Safety Administration, 400 Seventh St., SW., Washington, DC, 20590.

SUPPLEMENTARY INFORMATION:

Table of Contents

I. Introduction
II. Background
a. Need for the Dummy
b. Evolution of the Dummy
c. ES–2 Rib Extensions
III. Description
IV. Biofidelity
a. ISO Technical Report 9790 Methodology
b. NHTSA Biofidelity Ranking System
V. Repeatability and Reproducibility
a. Component Tests
b. Sled Tests
1. Flat Wall Test Results
2. Abdomen Offset Test Results
VI. Vehicle Tests
VII. Durability and Overload
a. Durability
b. Overload
VIII. Reversibility
IX. Directional Impact Sensitivity
X. Temperature
XI. Proposed Calibration Tests
a. Head Drop Test Specifications
b. Neck Pendulum Test
c. Thorax
d. Lumbar Spine
e. Shoulder
f. Abdomen
g. Pelvis
XII. Other Advantages
Rulemaking Analyses and Notices
Public Participation

I. Introduction

This NPRM proposes to amend 49 CFR part 572 by adding specifications and calibration procedures for an advanced crash test dummy representing a 50th percentile adult male for use in side impact testing. This document relates to an NPRM previously issued by NHTSA (69 FR 27990, May 17, 2004; Docket 2004–17694) that proposed to add a vehicle-to-pole test to Federal Motor Vehicle Safety Standard (FMVSS) No. 214, ''Side Impact Protection'' (49 CFR 571.214). The pole test simulates a vehicle's crashing sideways into narrow fixed objects like telephone poles and trees. If adopted as a final rule, the proposed pole test is likely to result in the installation of dynamically deploying side impact air bag systems and other measures to protect front seat occupants against head, thoracic, abdominal and pelvic injuries in side crashes.

In the proposed pole test, a vehicle is propelled at an angle of 75 degrees (measured from the front end of the vehicle longitudinal axis in the counter-clockwise direction (driver's side) or clockwise direction (front outboard passenger side)) into a 254 millimeter (10 inch) rigid pole at a speed of 32 kilometers per hour (20 miles per hour (mph)). An anthropomorphic test dummy representing a 50th percentile adult male is in the front outboard seat on the struck side of the vehicle. Vehicles would have to be certified as complying with an established head injury criterion and with thoracic, abdominal and pelvic injury criteria developed for the new dummy. The agency has also proposed to use the advanced dummy in FMVSS No. 214's existing moving deformable barrier (MDB) test, which simulates a vehicle-to-vehicle ''T-bone'' type intersection crash, replacing the present side impact dummy (SID) used in the test.

Today's NPRM proposes the specifications and calibration requirements for the 50th percentile adult male test dummy that NHTSA has proposed to use in the upgrades to FMVSS No. 214. The dummy is a modified version of a European side impact dummy, the ES–2 dummy. The dummy has a weight of 72 kilograms (kg) (158.8 pounds) and seated height of 90.9 centimeters (cm) (35.8 inches), as originally designed by a European consortium under the guidance of EEVC (European Enhanced Vehicle-Safety Committee) Working Group 9 (Intereurope Regulations, EEC document 96/27/EC, July, 1996). The modifications are with regard to thoracic rib extensions that have been added to address structural deficiencies identified by NHTSA that could affect injury measurement made by instruments within the chest of the dummy. The modified dummy proposed today is hereinafter referred to as the ''ES–2re,'' the ''re'' indicating the use of the rib extensions on the dummy.

NHTSA currently specifies two 50th percentile male side impact test dummies in part 572. A test dummy set forth in Subpart F of part 572 is used in the agency's MDB test of FMVSS No. 214. This dummy is commonly referred to as ''SID,'' short for the FMVSS No. 214 ''side impact dummy.'' The other test dummy is set forth in Subpart M of part 572, and is used in a 90-degree vehicle-to-pole test that manufacturers can choose to use to meet the upper interior head impact protection requirements of FMVSS No. 201, ''Occupant Protection in Interior Impact'' (49 CFR 571.201). The Subpart M dummy is based on two existing dummies, the Subpart F ''SID'' and a part 572, Subpart E ''Hybrid III'' test device that is used in testing under FMVSS No. 208, ''Occupant Crash Protection'' (49 CFR 571.208) The combined Subpart M side impact dummy is commonly referred to as the ''SID/HIII'' dummy.

Overall, the ES–2re is technically an improvement over the SID and SID/HIII test dummies, offering more human-like features for side impact protection assessment. The ES–2re has improved biofidelity and enhanced injury assessment capability compared to the other dummies. The agency tentatively believes that the dummy is a sound test device that will provide valuable data in assessing the potential for injury in side impacts and is suitable for incorporation into part 572.

II. Background

a. Need for the Dummy

The agency evaluated the ES–2re dummy in a variety of test exposures and found it to be more versatile for side impact injury assessment purposes than the SID and SID/HIII dummies.

The ES–2re dummy has provisions for instrumentation that can assess the potential for head injury (it measures the resultant head acceleration, which is used to calculate the Head Injury Criterion (HIC), the primary measure in the Federal motor vehicle safety standards for head injury); neck injuries via upper and lower neck load cells; thoracic injuries in terms of spine and rib accelerations and rib deflections; abdominal injuries through three load cells to assess the magnitude of lateral and oblique forces; acetabulum and pubic symphysis injuries by way of load cell measurements, as well as pelvis acceleration. The ES–2re can also assess

load transfer between the upper and the lower torso halves, torso interaction with the vehicle seat back, and the impact severity of the vehicle structure on the legs by way of a femur load cell. In addition, a clavicle load cell is available to assess shoulder loading.

The ES–2re dummy has articulated half-arms, terminating at the elbow height, that can be placed at the side of the thorax. In this position, the impacted arm acts as an interposer between the vehicle interior and the chest. The arms may also be swung up to several positions, leaving the thorax and the abdomen exposed to direct contact by the vehicle interior.[1]

The ES–2re would be representative of a major segment of the population that is exposed to the risk of fatal and serious injuries in side impacts. Table 1 shows the fatality and injury distribution of the estimated target population (U.S. motor vehicle occupants) in all types of side impact crashes between 12 and 25 mph delta V, categorized by MAIS (maximum abbreviated injury scale) and body regions for the head, chest, abdomen and pelvis. Of these, approximately 35 percent are small stature occupants.[2] The remaining occupants fall into midsize and large segments of the population. The ES–2re dummy would address the risk of injury of these occupants in side impacts. The agency identified three injured occupant size categories: (a) Small (or 142 centimeters (cm) to 163 cm (or 56 to 64 inches)); (b) median (165–180 cm or 65–71 inches) (''midsize''); and large (183–229 cm or 72–90 inches).

TABLE 1.—U.S. MOTOR VEHICLE OCCUPANT POPULATION INJURY SEVERITY DISTRIBUTION IN SIDE CRASHES

[For delta–V of 12–25 mph]

Body region	MAIS 1	MAIS 2	MAIS 3	MAIS 4	MAIS 5	Fatality	Total
Head and Face	12759	3353	287	506	476	1400	18781
Thorax	7652	508	2408	1868	32	1147	13615
Abdomen	509	150	62	308	77	240	1346
Pelvis	0	0	247	0	0	14	261

The injuries to the midsize and large occupant population, categorized by MAIS and body regions for the head, chest, abdomen and pelvis, are shown in Table 2, below.

TABLE 2.—U.S. MOTOR VEHICLE OCCUPANT MID-SIZE AND ABOVE INJURY SEVERITY DISTRIBUTION IN SIDE CRASHES

[For delta–V of 12–25 mph]

Body region	MAIS 1	MAIS 2	MAIS 3	MAIS 4	MAIS 5	Fatality	Total
Head and Face	8293	2179	187	329	309	910	12208
Thorax	4974	330	1565	1214	21	746	8850
Abdomen	331	98	40	200	50	156	875
Pelvis	0	0	161	0	0	9	170

b. Evolution of the Dummy

The ES–2 dummy evolved from the predecessor European EuroSID and EuroSID–1 dummies. Development of the EuroSID prototype was initiated in Europe in the early 1980s. EuroSID–1 was introduced as the European side impact dummy in a report published by EEVC–WG9 in 1989, approximately one year after the agency issued an NPRM to use the SID dummy in what was then the proposed incorporation of the MDB test into FMVSS 214. When the agency examined EuroSID–1 during the course of that rulemaking, it determined that the dummy had a number of technical problems involving flat topping,''[3] biofidelity, reproducibility of results, and durability. Because of these limitations, NHTSA decided against adopting EuroSID–1 and instead adopted SID as the anthropomorphic test device used in the FMVSS No. 214 MDB test.

Subsequent to NHTSA's adoption of the SID into FMVSS No. 214 in 1990, the European developers subjected the EuroSID–1 to further modifications and testing. The dummy was finally incorporated in the European Directive 96/27/EC on July 1996.

In 1996, NHTSA undertook an extensive evaluation of the EuroSID–1, in response to a Congressional directive, to determine whether the side impact provisions of EU 96/27/EC were at least functionally equivalent to the requirements of FMVSS No. 214. In the evaluation, NHTSA found that flat topping was still a problem. The data for the EuroSID–1 rib deflections indicated the existence of mechanism within the rib structure that would limit the ribs from full compression even under very high load. Flat topping was a matter of concern, especially at low levels of deflection, because it is an indication that the dummy's rib deflection mechanism is binding, and consequently, that the dummy's thorax is not responding correctly to the load from the intruding side structure. With flat topping, the resulting rib deflections and the V*C computations[4] are suspect. As a result, NHTSA concluded that the

[1] The SID dummy presently used in FMVSS No. 214 measures accelerations of the ribs, spine and pelvis and does not have articulating arms or shoulders.

[2] To address this population, the FMVSS No. 214 NPRM also proposed that a test dummy representing a 5th percentile adult female would be used in the pole and MDB tests of FMVSS No. 214.

[3] Flat-topping in the EuroSID dummy was described in the preamble to NHTSA's final rule adopting SID. The agency stated, ''[o]ne of the problems discovered in NHTSA's EuroSID sled tests was that the ribs were bottoming out, which may have invalidated the V*C measurements being made. This condition was characterized by a flat spot on the displacement-time history curve, while the acceleration-time history curve showed an increase with time until the peak g was reached. Although considerable attempts were made to correlate V*C and TTI(d), the deflection data collected continue to be questionable.'' 55 FR 45757, 45765 (October 30, 1990).

[4] V*C, viscous criterion, is another way of measuring the potential for thoracic injury. It is based upon the product of chest compression normalized by the chest half-width and the rate of rib compression.

EuroSID–1 dummy was still not suitable for use in FMVSS No. 214.[5, 6]

Since that time, the EuroSID line of dummies has made steady progress toward overcoming the concerns raised by NHTSA and other users of the dummy. Beyond flat topping, concerns had been raised about the projecting back plate of the dummy's upper torso grabbing into the seat back of the vehicle, upper femur bone's contact impact with the pubic load cell hardware, binding in the shoulder assembly resulting in limited shoulder rotation, and data spikes in the pubic symphysis load measurements associated with knee-to-knee contact. To address these concerns, the dummy manufacturer installed new hardware in the dummy, including an improved rib guide system in the thorax, a curved and narrower back plate, a revision in the pelvis to increase the range of upper leg abduction, the inclusion of a high mass flesh system in the legs and beveled edges in the shoulder clavicle guide assembly. The upgraded dummy was identified as the ES–2.

c. ES–2 Rib Extensions

The dummy manufacturer initially addressed the problem of the EuroSID–1's back plate grabbing the seat back by reducing the size and shape of the back plate. Nonetheless, the back plate continued to grab the seat back in some of NHTSA's tests. To further address the problem, the dummy manufacturer redesigned the rib module by adding rib extensions. The extended ribs provide a continuous loading surface that nearly encircles the thorax, and enclose the posterior gap of the ES–2 ribcage that was thought to be responsible for the ''grabbing'' effects.

The ES–2 with the rib extensions is the ES–2re dummy proposed today for incorporation into part 572. Our test data indicate that these rib extensions reduce the back plate grabbing force that had the effect of lowering rib deflections to insignificant amounts in vehicle side impact tests that had exhibited rather large back plate loads. The rib extensions also do not appear to affect the dummy's rib deflection responses in tests in which high back plate loads did not occur.

III. Description

A technical report and other materials describing the ES–2re in detail have been placed in the docket for today's NPRM (see also Docket No. 17694, *supra*).

The specifications for the ES–2re would consist of: (a) A drawing package containing all of the technical details of the dummy; (b) a parts list; and (c) a user manual containing instructions for inspection, assembly, disassembly, use, and adjustments of dummy components. These drawings[7] and specifications would ensure that the dummies would be the same in their design and construction. The performance calibration tests proposed in this NPRM would serve to assure that the ES–2re responses are within the established biomechanical corridors and further assure the uniformity of dummy assembly, structural integrity, consistency of response and adequacy of instrumentation. As a result, the repeatability of the dummy's impact response in vehicle certification tests would be ensured.

Drawings and specifications for the ES–2re are available for examination in the NHTSA docket section. Copies of those materials and the user manual may also be obtained from Leet-Melbrook, Division of New RT, 18810 Woodfield Road, Gaithersburg, MD, 20879, tel. (301) 670–0090.

The ES–2re consists of a ''skeleton'' which is covered by ''soft tissue'' consisting of rubber, plastic and foam. The dummy does not have lower arms because researchers concluded that lower arms on the side crash test dummy could interfere with the interaction of the side structure of a vehicle and the dummy's measurement of potential harm to the thoracic and pelvic regions. So as to assure to the extent possible the accuracy of the assessment of the potential for injury to these body regions, the lower arms were thus not included on the dummy. The ES–2re has a mass of 72 kilograms (kg) (158.8 pounds), which is the mass of a 50th percentile adult male without the lower arms.[8]

The 90.0 cm seated height of the ES–2re is representative of a 50th percentile adult male. In terms of assessing the effectiveness of head-protecting side air bags to vehicle occupants, NHTSA believes that the height of the dummy is a determinative factor in ascertaining where an occupant's head will impact a vehicle's interior. Since the height of the ES–2re is representative of a 50th percentile adult male, the dummy would provide valuable data on where mid-size occupants will impact the vehicle's interior in the side impact test.

IV. Biofidelity

Biofidelity is a measure of how well a test device duplicates the responses of a human being in an impact. Two methods are currently available for assessing the biofidelity of a dummy in side impact testing. These are: (a) An International Organization of Standardization (ISO) procedure, referred to as ISO Technical Report (TR) 9790, which determines the biofidelity of a dummy by how well does the dummy's body segment and/or subsystem impact responses replicate cadaver responses in defined impact environments; and (b) a newly developed NHTSA Biofidelity Ranking System. The latter method determines the dummy's biofidelity based on two assessment measures: (a) The ability of a dummy to load a vehicle or some other type of an impact surface as a cadaver does, termed ''External Biofidelity'; and (b) the ability of a dummy to replicate those cadaver responses that best predict injury potential, termed ''Internal Biofidelity.'' The NHTSA Biofidelity Ranking System method was reported by Rhule H., *et al.*, in a technical paper in the 2002 Stapp Car Crash Journal, Vol. 46, p. 477, ''Development of a New Biofidelity Ranking System for Anthropomorphic Test Devices.'' The ES–2re's biofidelity was evaluated under both of these methodologies.

a. ISO Technical Report 9790 Methodology

The Occupant Safety Research Partnership (OSRP) and Transport Canada conducted biomechanical testing on the ES–2 dummy using the ISO specified methodology and test procedures. The results of these tests have been reported by Byrnes *et al.* in the 2002 Stapp Car Crash Journal, Vol.

[5] ''Report to Congress: NHTSA Plan for Achieving Harmonization of the U.S. and European Side Impact Standards,'' April 1997; ''Report to Congress: Status of NHTSA Plan For Side Impact Regulation Harmonization and Upgrade,'' March 1999. NHTSA Docket No. 1998–3935–1 and –10 of the DOT Docket Management System at *dms.dot.gov.*

[6] In 2000, the agency granted a petition for rulemaking from the Association of International Automobile Manufacturers, the Insurance Institute for Highway Safety, and the organization then called the American Automobile Manufacturers Association, asking NHTSA to replace the SID with the EuroSID–1 used in a European side impact standard (EU/96/27/EC). Although the agency had concluded that EuroSID–1 had flat topping and other problems, NHTSA granted the petition anticipating that the problems could be cured and that a dummy technically superior to the SID could be incorporated into FMVSS No. 214.

[7] NHTSA notes that some of the drawings are the same as those used to specify the Hybrid II 50th percentile male dummy (set forth in 49 CFR Part 572, Subpart B) and the Hybrid III 50th percentile male dummy (49 CFR Part 572, Subpart D). It is proposed that such drawings of the ES–2re would bear two drawing numbers: a number that identifies the drawing for purposes of the ES–2re drawing package and a reference to the drawing of the Subparts B or D dummy that is identical to that drawing.

[8] A 50th percentile adult male with lower arms has a mass of approximately 78 kg (172 pounds).

46, paper No. 2002–22–0014. The ES–2re dummy's backplate modifications were performed with the express objective not to alter in any way the ES–2 dummy's impact response. Inasmuch as in subsequent tests it was shown that the new ES–2re conformed to the same calibration levels, it was assumed that the rib extension modifications to the ES–2 had no effect on its ISO based biofidelity assessment. (The validity of the assumption has been confirmed in the NHTSA Biofidelity Ranking System tests in which it was established that both the ES–2 and the ES–2re dummies had nearly identical biofidelity levels.) The ISO rating system is based on a scale of 0 to 10, with 0 signifying total lack of biofidelity and 10 signifying that the body segment has the same biofidelic response as a human subject. Once the ratings are established for each body segment, the overall dummy's biofidelity is calculated and its ranking determined using the classification scale shown in Table 3.

TABLE 3.—ISO BIOFIDELITY CLASSIFICATIONS

Excellent	>8.6 to 10.
Good	>6.5 to 8.6.
Fair	>4.4 to 6.5.
Marginal	>2.6 to 4.4.
Unacceptable	0 to 2.6.

The overall ES–2re dummy's biofidelity rating was determined to be ''fair,'' at 4.6, an improvement over the SID and EuroSID–1, which received ratings of 2.3 and 4.4, respectively (Byrnes, *et al.*, ''ES–2 Dummy Biomechanical Responses,'' 2002, Stapp Car Crash Journal, Vol. 46, #2002–22–0014, p. 353).

The ES–2 (ES–2re) ISO biofidelity rating also compares favorably to that of the SID/HIII, which, on account of its new special purpose side impact head and neck, received an overall rating of 3.8.[9]

b. NHTSA Biofidelity Ranking System

The biofidelity ranking system developed by Rhule, H., *et al., supra,* includes an assessment of the dummy's External Biofidelity and Internal Biofidelity. The Overall External and Internal Biofidelity ranks are an average of each of the external and internal body region ranks, respectively. In contrast to the ISO classification method, a lower biofidelity rank indicates a more biofidelic dummy by this NHTSA ranking method. A dummy with an External and/or Internal Biofidelity rank of less than 2.0 is considered to respond much like a human subject.

The NHTSA ranking system is based on a variety of cadaver and dummy exposures, such as head drop tests, thorax and shoulder drop tests, thorax and shoulder pendulum tests, and whole body sled tests. The NHTSA ranking system also includes the abdominal and pelvic offset sled test conditions. Each test condition is assigned a weight factor, based on the number of human subjects tested, to form a biomechanical response corridor. For each response requirement, the cumulative variance of the dummy response relative to the mean cadaver response (DCV) and the cumulative variance of the mean cadaver response relative to the mean plus one standard deviation (CCV) are calculated. The ratio of DCV/CCV expresses how well the dummy response duplicates the mean cadaver response: a smaller ratio indicating better biofidelity.

Although this method does not establish an ''absolute'' ranking scale, the ranks provide a relative sense of the ''number of standard deviations away'' the dummy's responses are from the mean human response. Rhule conducted an analysis and found that if the dummy's biofidelity ranking is below two, then the dummy is behaving similar to the human cadaver. The evaluation methodology provides a comparison of both dummy response to cadaver response as well as a comparison of two or more dummies.

Rhule *et al., supra,* determined external and internal biofidelity rankings for the ES–2 dummy. NHTSA later repeated the tests for the ES–2re to determine that dummy's biofidelity rankings. Tables 4 and 5, below, provide a summary of External Biofidelity and Internal Biofidelity rankings, respectively, for the ES–2 and the ES–2re. The results of NHTSA's Biofidelity Ranking System tests indicate that the ES–2 and ES–2re dummies have essentially the same external and internal biofidelity assessment values, and that the rib extensions have thus had no effect on the biofidelity of the ES–2. The ES–2re dummy had an Overall External Biofidelity rank of 2.6, compared to 2.7 for the ES–2. Its Overall Internal Biofidelity rank was 1.6.

TABLE 4.—EXTERNAL BIOFIDELITY RANKINGS OF THE ES–2 AND ES–2re

External biofidelity rank	ES–2	ES–2re
Overall	2.7	2.6
Head/Neck	3.7	3.7
Shoulder	1.4	1.4
Thorax	3.2	2.9
Abdomen	2.5	2.6
Pelvis	2.7	2.7

TABLE 5.—INTERNAL BIOFIDELITY RANKINGS OF THE ES–2 AND ES–2re

Internal biofidelity rank	ES–2	ES–2re
Overall with T1 (w/o abdomen)		1.5
Overall with Defl. (w/o abdomen)	1.6	1.6
Overall with TTI (w/o abdomen)	n/a	1.6
Head	1.6	1.0
Thorax–T1	n/a	1.5
Thorax–Delft	1.7	1.8
Thorax–TTI		1.8
Abdomen	n/a	n/a
Pelvis	2.1	2.0

Based on all of the testing, the agency tentatively concludes that the ES–2re has sufficient biofidelity for use in FMVSS No. 214's side impact injury assessment tests. According to both the ISO and NHTSA biofidelity ranking systems, the ES–2 and the ES–2re dummies have nearly identical biofidelity rankings. While a more biofidelic test device than the ES–2re may be developed in the future, the agency tentatively concludes that the ES–2re is a suitable and valuable test device for use in side impact testing today.

V. Repeatability and Reproducibility

A dummy's repeatability[10] and reproducibility[11] is typically based on the results of component tests and sled tests. In the tests, the impact input as well as the test equipment are carefully controlled to minimize external effects on the dummy's response. Component tests are typically better controlled and thus produce more reliable estimates of the dummy's repeatability and reproducibility than is possible in sled and vehicle tests. Sled tests, on the other hand, offer a method of efficiently evaluating the dummy as a complete system in an environment much like a vehicle test.

Component tests are needed to establish the dummy's component performance relative to the

[9] The biofidelity rating for the SID dummy used in FMVSS No. 214 is 2.3. The rating for the SID/HIII of 3.8, using the ISO method, reflects use of the special purpose side impact HIII head and neck as noted in 63 FR 41468, August 4, 1998.

[10] Repeatability is defined as a similarity of responses of a single dummy measured under identical test conditions.

[11] Reproducibility is defined as the smallness of response variability between different dummies of the same design under identical test conditions.

biomechanical corridors to which each major body segment must correctly respond. That is, if the dummy's component is or becomes deficient, the component test will identify to the user that the component will not respond properly in impact tests. Sled tests in turn are needed to establish the consistency of the dummy's kinematics, its impact response as an assembly, and the integrity of the dummy's structure and instrumentation under controlled and representative crash environment test conditions.

The agency's component and sled repeatability and reproducibility tests were based on two dummies. (See ''Technical Report—Design, Development and Evaluation of the ES–2re Side Crash Test Dummy,'' *supra*.)

a. Component Tests

The component tests were conducted on head, neck, shoulder, upper rib, middle rib, lower rib, abdomen, lumbar spine and pelvis body regions. The repeatability assessment was made in terms of percent CV (Coefficient of Variance). A CV value of less than 5 percent is considered excellent, 5–8 percent good, 8–10 percent acceptable, and above 10 percent poor.[12] The repeatability of the dummies was assessed in two separate series of tests. In the first series, the dummy calibrations were performed between sled or vehicle crash tests. In the second series, the calibration tests were performed consecutively without any other intermittent tests. In the first series, nine tests were performed with one of the dummies, and seven tests with the other. In the second series, two newly acquired dummies were exposed to five sets of calibration tests each. Reproducibility was assessed by comparing the average responses of both dummies.

The results of the component repeatability tests indicate ''excellent'' and good repeatability for the ES–2re dummy for all components except for the pelvis, which has a rating classification of ''good,'' and the shoulder with a rating of ''acceptable.''

The reproducibility assessment was made in terms of response differences between each of the two sets of dummies with respect to the mean. The rating for reproducibility takes into account the cumulative variabilities of two or more dummies and is primarily indicative of the repeatability of the manufacturing process of the same type of dummy and to some extent the repeatability of design specifications, inspection, and test methodology. The reproducibility assessment does not serve the purposes of accepting or rejecting the dummy; rather it is an indication of how far the responses of different dummies could vary under identical test conditions. The results of the pooled component tests indicate that the neck, thorax lumbar spine and pelvis responses are well below the 5% level and the head, shoulder and abdomen response below the 7% level.

b. Sled Tests

To reduce test-to-test variation of sled pulse parameters, NHTSA tested two ES–2re dummies (designated ''dummy #070'' and ''dummy #071'') simultaneously on a dual occupant side impact Hyge sled buck developed by the agency. The sled pulse was an approximate half-sine wave, with the peak acceleration of 12.7 g's and duration of approximately 80 ms. The impact speed was 6.7 meters per second (m/s) (22 ft/s). Two test conditions were used for the repeatability and reproducibility assessment: a flat rigid wall; and a rigid wall with abdomen offset (simulating a vehicle armrest). The two ES–2re dummies were exposed to two series of five Hyge sled tests, for a total of 10 test exposures per dummy.

For the flat wall test condition, the wall was 374 mm (14.7 in) high from the front edge of the seat, and 368 mm (14.5 in) long from the back of the seat. For the abdomen offset test condition, the same flat wall was used, with a protruding 305 mm (12 in) long, 76 mm (3 in) thick and 83 mm (3.3 in) wide wooden offset block attached to the wall. The offset block, simulating an armrest, was oriented such that it would impact the abdomen only, above the pelvis and below the lower rib. The objective of the abdomen offset tests was to provide a test environment with severe loading of the abdominal region.

The sled buck incorporated a Teflon-covered bench seat with two Teflon-covered rails to support the seated dummies from behind. As the sled buck was accelerated, the buck slid beneath the dummies until the dummies' left side impacted the rigid wall.

High-speed digital video cameras were positioned in front of each dummy in order to capture head motion for use in performing motion analysis of the head translation. The dummies were instrumented with sensors to record principal injury indicators such as head, resultant lower spine (T12) and pelvis accelerations, rib deflections, abdominal, lumbar and pubic symphysis loads, and other parameters. A contact switch was positioned on the side of each dummy and on the load wall at the location of first contact to indicate the precise instant of dummy contact with the wall.

1. Flat Wall Test Results

Using the dummy rating practice set forth in ISO/TC22/SC12/WG5, generally the responses in the flat wall tests displayed either excellent or good repeatability, except for the lumbar Y (shear) force repeatability of dummy Serial Number (S/N) #070 falling outside the CV acceptability boundary at 14.8%. This elevated CV value for dummy #070 also was responsible for a reproducibility assessment at 17.5%. While these CV values are relatively high, the agency is not considering an injury assessment associated with this response. Moreover, this response is not considered to be of importance since it did not have an effect on either the magnitude of the loading or the variability of the adjacent structure responses, such as pubic symphysis, the abdomen and the T12. HIC responses exhibited excellent repeatability of each dummy and reproducibility of both dummies. In all tests, the rib displacement time history provided a smooth response, with no indications of the flat topping phenomena that had been a shortcoming of previous versions of the EuroSID, EuroSID–1, and the prototype ES–2 dummies.

2. Abdomen Offset Test Results

Upon thorough review of the response traces after the test series was completed, it was noted that the first test in the series with dummy S/N #070, exhibited responses that were somewhat different from the responses observed in the remaining four tests. When compared to the subsequent four tests, the first test had significantly lower abdominal and lumbar loads and larger rib displacements (See Appendix C, Figures C.10 through .18 of the Technical Report, *supra*). Upon review, the data for that test indicated that impact contact with the abdominal offset block appear to have slightly favored the proximity of the lower rib rather than the middle of the abdomen, as had been the case in the subsequent four tests. This could have been caused either by a slight variation in the set-up of the dummy for the test or a slight posture realignment during the dummy's movement while approaching the impact surface. Inasmuch as the seating procedure was not varied and this aberration did not reoccur in the four subsequent tests, this test was considered to be a legitimate outlier. Therefore, that test was excluded from the analysis.

The remaining responses for the abdomen offset sled tests provided

[12] ISO/TC22/SC12/WG5.

either excellent or good repeatability and reproducibility, except for one test in which the lumbar moment reproducibility response had a CV value of 16.7, which is only by 1.7% into the poor range. While this CV value is high, this measurement is not considered for injury assessment with the EuroSID, EuroSID–1 and ES–2re dummies. Furthermore, this slightly elevated response appears not to affect either the magnitude of the loading or the variability of the adjacent structure responses, such as pubic symphysis, the abdomen, the T12 moment and the rib displacement time history, without any indications of flat topping.

Based on the above, the agency tentatively concludes that the repeatability and reproducibility of the ES–2re responses in flat wall and abdominal offset impacts are acceptable (generally in the order of ''excellent'').

VI. Vehicle Tests

The agency performed an extensive set of vehicle crash tests with the ES–2 and ES–2re dummies to compare their responses, to determine the levels of dummy responses at different loading conditions, to determine the integrity of the measurements, and the dummies' structural durability. The testing consisted of:

(a) FMVSS No. 214 tests with a higher and heavier moving deformable barrier;

(b) Fleet performance testing to FMVSS No. 214 and NHTSA New Car Assessment Program (NCAP) side impact test protocols; and

(c) FMVSS No. 201 type and oblique side impact pole testing.

The tests were also designed to compare the ES–2 and ES–2re dummies for the effectiveness of the rib extension backplate fix. The test matrix included 14 MDB-to-vehicle and/or vehicle-to-vehicle crash tests with the ES–2 dummy and 6 crash tests with the ES–2re dummy, and 8 vehicle-to-pole crashes with the ES–2 and 4 with the ES–2re dummies.

Findings of Testing the ES–2 with Rib Extension Fix (ES–2re)

The findings of the crash tests were as follows:

- In comparable full scale crash tests with the ES–2, the ES–2re dummy demonstrates nearly identical performance in which seat back ''grabbing'' was not evident;
- Full scale crash tests of vehicles in the FMVSS Nos. 201, 214, and NCAP tests, and those tested with an MDB of the Insurance Institute for Highway Safety (IIHS), indicate that the ES–2re has resolved the back plate ''grabbing'' problem. (In the NCAP tests, the FMVSS No. 214 moving deformable barrier impacted the vehicle at 62 km/h (38.5 mph). In the IIHS test, a high-profile and relatively stiff MDB was used to impact the target test vehicle.)
- While in some vehicles the back plate still senses loading from the seat back structure, the loading is caused primarily by a protruding seat frame geometry which interacts with the dummy's ribcage structure rather than by back plate grabbing;
- In those vehicles in which the localized back plate load path was in evidence and now has been mostly eliminated, the momentum transfer, that was originally passed through the back plate with the ES–2, is now being directed mainly through the ribs and partly through the shoulder of the ES–2re. As a result, rib deflections, in which ''grabbing'' was in evidence, are expected to increase;
- In oblique side impact pole tests and additional FMVSS No. 214 and NHTSA side NCAP tests, the durability of ES–2re, and the good mechanical performance of the rib deflection system and back plate loading, were further verified; and
- The ES–2re demonstrated consistent performance and the ability to perform useful measurements under the most severe loading conditions.

VI. Durability and High Severity Loading

a. Durability

No durability problems arose with the ES–2re dummies in any of the full scale vehicle crash tests and sled tests. The majority of the rib deflections, although close to the maximum available deflection range, did not bottom out against the deflection stop. The only new parts required after the full series of full scale crash tests were shoulder foams, pelvis foam plugs, and one set of ribs. It was also observed that sharp edges on socket head screws attached to the clavicle load cell were causing the shoulder foam cap to tear. The screws were later modified by rounding off their sharp edges to avoid tearing of the shoulder foam cap. Also, there was a tear in one of the dummies' abdomen, but the abdomen passed the impact calibration requirements.

b. High Severity Loading

The ES–2re performed well without producing distorted or truncated measurements in higher severity overload tests, such as the IIHS MDB and the side NCAP tests as well as rigid wall and abdominal offset sled impact tests. In these tests, the majority of the rib deflections were also within the maximum available compression range. Only in two instances did the dummy's ribs deflect to their maximum range. However, even under these circumstances none of the measurements indicated data discontinuities and/or signal distortions in spite of the very rigorous impact exposures of the side NCAP test and the IIHS MDB test. Given that the measurements were neither distorted, nor discontinuous, the ES–2re responses appear to be satisfactory even in high severity loading conditions.

VIII. Reversibility

The design of the original EuroSID incorporated reversibility features to accommodate the dummy's use for both left and right side impacts. Although test literature related to the EuroSID, EuroSID–1 and ES–2 dummies specifications do not indicate which side of the dummy was tested, to our knowledge all of the EuroSID, EuroSID–1 and ES–2 dummies' tests were evaluated in left side impact applications. In turn, the agency is aware that the EuroSID–1 has been and still is being used in England, Japan and Australia for right side impacts. Accordingly, we believe that the ES–2re dummy—which has the same left to right side impact conversion provisions as the ES–2 and its predecessor the EuroSID–1 dummy—will perform equally well, upon appropriate conversion when struck on either side, *i.e.*, in both driver (left) side and passenger (right) side crash tests. For right side impacts, the dummy must be reconfigured and instrumented to the right side by: (a) Inverting the three rib modules and installing them for right side impact; (b) moving the load cell on the left clavicle to the right side and the shoulder load cell structural replacement to the left side; (c) moving the abdomen load cells to the right side and the load cell structural replacements to the left side; (d) moving the femur load cells to the right side of the dummy, if only the left femur is instrumented; and (e) reconfiguring the polarities of all sensors of the reverse installed parts, in accordance with the SAE J211 Recommended Practice. The agency Manual for Users (the Procedures for Assembly, Disassembly and Inspection) (PADI) describes in more detail the steps that need to be taken to convert the dummy for use from the left to the right side of the vehicle.

IX. Directional Impact Sensitivity

Limited agency testing of the dummy's thorax in oblique pendulum impacts indicates some directional

sensitivity in the rib deflection and spine acceleration responses. Literature published by EEVC suggests similar sensitivity in the ES–2 dummy's thorax ribs compression measurements in oblique pendulum impact tests. This is indicated by increased rib deflections when the ribcage is obliquely impacted from the rear and by reduced deflections when impact occurs from the front. Similar sensitivity, but of a lower magnitude, is in evidence for the upper spine acceleration. In contrast, there is less sensitivity in the abdominal force measurement and lower spine accelerometer output.

While the EEVC acknowledges the existence of some sensitivity of the ES–2 dummy to oblique impacts, it believes that the dummy offers increased injury assessment and measurement capabilities to meet the needs of legislative authorities worldwide. The EEVC states further that the ES–2 dummy forms a solid basis for interim harmonization and will further support activities to help realize this objectives (EEVC WG12 Report, August 12, 2001). The EuroNCAP program has used the EuroSID–1 for several years and lately, the ES–2 for the same purpose. While our own evaluation of the ES–2re dummy in oblique pendulum tests confirms the EEVC-noted sensitivity, we do not believe the pendulum test is necessarily reflective of the dynamic interaction between impacted door and occupant during the crash event. In the pendulum test, the loading is imposed on the dummy's ribcage in a fixed, large oblique impact angle throughout the entire loading period as well as by an impactor that produces a very concentrated, localized loading to the ribcage. Review of our full scale test data do not indicate evidence of the magnitude of sensitivity produced in pendulum type impacts. Accordingly, the agency believes that while there is some evidence of response sensitivity to pendulum type oblique impacts, it is not of concern for MDB and pole type full scale crash tests. Comments are requested on whether ES–2 and ES–2re dummy users have seen such effects in measured responses during full scale crash tests. If so, please provide details on the loading conditions and vehicle design configuration (*e.g.*, test speed, impact orientation, side air bag, etc.).

X. Temperature

While the 18° C to 26° C (64.4° F to 71.6° F) temperature range is specified for the EuroSID–1 by EU in 96/27/EC and for the ES–2 by EEVC in EuroNCAP side impact tests, NHTSA proposes that the ES–2re's temperature at the time of calibration, sled and full scale crash tests be in the range of 20.6° C to 22.2° C (69° F to 72° F). This temperature range is specified for all NHTSA Hybrid III series and SID/HIII dummies. This temperature range is proposed to reduce the variability of the dummy's impact response due to temperature sensitivity of damping and rubber and plastic materials used within the dummy. The agency believes that the proposed range is also practical for the ES–2re dummy.

XI. Proposed Calibration Tests

The agency proposes the following calibration test specifications and procedures for the ES–2re dummy. There would be qualification tests for components of the dummy (the head; neck; thorax; and lumbar spine), and impact tests performed on local areas (the shoulder, abdomen; and pelvis) of a fully assembled seated dummy. The agency is also exploring the possibility of replacing the individual rib module tests by a single pendulum test to the side of the rib cage of the seated dummy, and to relegate the rib module specification to the drawing level and its assembly-disassembly procedures to the user manual.

a. Head Drop Test Specifications

The head is dropped from 200 mm onto a flat, steel plate such that its midsagittal plane makes a 35 degree angle with respect to the impact surface and its anterior-posterior axis is horizontal. When the dummy head is dropped in accordance with the above test procedure, the agency proposes the following certification specifications:

1. When the head assembly is dropped in accordance with 49 CFR 572.112(a), the measured peak resultant acceleration must be between 125 g's and 155 g's;
2. The resultant acceleration-time curve must be unimodal to the extent that oscillations occurring after the main acceleration pulse must not exceed 15% (zero to peak) of the main pulse;
3. The fore-and-aft acceleration vector must not exceed 15 g's.

b. Neck Pendulum Test

The proposed test procedure involves attaching the neck to a EuroSID–1 headform, and attaching the assembly to the bottom of the pendulum specified in Subpart E of 49 CFR Part 572, Figure 22. The pendulum is raised to a height from which it would achieve an impact velocity of 3.4 ± 0.1 meters per seconds (m/s) in free fall. Lateral flexion, as well as rotation and translation of the headform would be measured.

When the ES–2re neck is tested in accordance with the proposed test procedure, the following specifications would have to be met:

1. The pendulum deceleration pulse is to be characterized in terms of its change (decrease) in velocity as shown in Table 5 with the velocity profile obtained by integrating the pendulum accelerometer output.

TABLE 5.—ES–2re NECK CERTIFICATION PENDULUM VELOCITY CORRIDOR

Time (ms)	Velocity (m/s)
Upper boundary	
1.0	0.0
3.0	−0.25
14.0	−3.2
Lower boundary	
0.0	−0.05
2.5	−0.375
13.5	−3.7
17.0	−3.7

2. The neck must have the following performance characteristics:

(a) the maximum headform flexion angle relative to time zero is 52 to 57 degrees and occurs within 54 to 64 ms.

(b) The maximum neck orientations at fore (A) [13] pendulum base angle is 32.0 to 37.0 degrees occurring between 53 and 63 ms, and

(c) The maximum neck orientations at the fore (B) pendulum base angle is 0.81*(A)+3.0+/−1.25 degrees respectively occurring between 54 and 64 ms.

Items (b) and (c) are shown for this NPRM in Figure U–2b. In view of the maximum flexion angle specification in (a), above, to avoid over-specification of the required performance, comments are requested on whether (b) and (c), above, are necessary for evaluating the adequacy of the neck.

c. Thorax

The dummy's thoracic response is evaluated by testing each individual rib module mounted in a drop test fixture. Upon disassembly from the dummy, each rib module is rigidly mounted in the drop rig fixture and the rib is impacted at 4.0 ± 0.1 m/s in free fall by an impactor with a mass of 7.78 kg. Each rib module is tested individually in the drop test rig by an impactor to impact the rib at 3.0 m/s and 4.0 m/s.

[13] The fore (A) and aft (B) base angles and the headform angle (C) are directly measured during the test. The headform flexion angle is calculated by summing the fore (A) and headform (C) angles. After the calculations, all rotations are digitally filtered using the SAE J211 CFC180 and the pendulum acceleration is digitally filtered using the SAE J211 CFC 60.

The response criteria are based on the minimum and maximum deflection of the rib. For each rib (upper, middle, and lower rib), the proposed rib deflection for the 3.0 m/s impact would be 36 to 40 mm, and for the 4.0 m/s impact 46.0 to 51.0 mm.

While the EEVC rib module test also specifies impacts at a lower speed (2 m/s), the agency data indicate that the same rib modules tested at all of the three speeds are consistent in the responses to the their respective performance corridors. Inasmuch as door velocities into dummies at FMVSS No. 214 and NCAP test speeds are never below 4.0 m/s impact speed, it is our tentative view that there is no need or value in evaluating the rib modules at 2 m/s. Furthermore, the rib modules are tightly controlled by design specifications. The agency tentatively concludes that the 3.0 m/s and 4.0 m/s impact tests provide a reasonably good assurance that any other rib module would respond consistently at any other impact speed. Accordingly, the agency is proposing to limit the calibration requirement to the 3.0 and 4.0 m/s impact speeds. Comments are requested on this issue.

As an alternative or addition to the individual rib tests, NHTSA is considering a certification procedure and response corridors that would address the performance of the thorax of the dummy as a complete system. It is anticipated that the thorax of a seated dummy would be impacted by a pendulum at a specified impact speed in the procedure described in a report entitled, ''Development of a Full-Body Thorax Certification Procedure and Preliminary Response Requirements for the ES–2re Dummy'' (see docket 18864). A rib deflection range would be specified. Advantages to this approach are that it would require no disassembly and re-assembly of the dummy, as opposed to the approach used by the EU that requires the dummy's partial disassembly and tests of each rib individually. The agency is considering using the thorax impactor currently specified in Subpart E of 49 CFR Part 572 to calibrate the thorax performance of the Hybrid III 50th percentile male frontal test dummy. If that impact procedure were to be specified, it is possible that neither new drop test equipment nor multiple rib module tests would be needed. A ''systems'' test of the thorax is used in calibration tests of all frontal impact and side impact dummies currently specified. Comments are requested on a systems test for calibration of the ES–2re thorax.

d. Lumbar Spine

This test would be similar to the neck calibration procedure, involving an impact test with a Subpart E, 49 CFR Part 572 neck test pendulum at 6.05 ± 0.10 m/s using the EuroSID–1 headform and interface.

When the lumbar spine is tested in accordance with the proposed test procedure, the following specification would have to be met:

1. The pendulum deceleration pulse is to be characterized in terms of its change (decrease) in velocity as obtained by integrating the pendulum accelerometer output as shown in Table 6.

2. The lumbar spine must have the following performance characteristics:

(a) The maximum lumbar spine flexion angle (relative to time zero) is 45–55 degrees occurring between 39 to 53 ms;

(b) The maximum lumbar orientation at fore (A) [14] pendulum base angle is 31 to 35 degrees occurring between 44 and 52 ms; and

(c) The maximum lumbar orientation at the fore (B) pendulum base angle is 0.8*(A)+3.25 +/ − 1.25 degrees respectively occurring between 44 and 62 ms.

Items (b) and (c) are shown in this preamble in Figure U–2b. In view of the maximum flexion angle specification in (a), above, to avoid over-specification of the required performance, comments are requested on whether (b) and (c), above, are necessary for evaluating the adequacy of the lumbar spine.

e. Shoulder

The calibration test would be an impact test performed on the shoulder area of a fully assembled, seated dummy. A 49 CFR Part 572, Subpart E pendulum (23.4 kg) would impact the dummy laterally (the dummy's midsagittal plane is perpendicular to the direction of impact). The impactor would swing freely to impact the dummy's upper arm pivot at a velocity of 4.3 m/s. The shoulder would pass the test if the peak acceleration of the impactor were between 7.5 and 10.5 g.

[14] The fore (A) and aft (B) base angles and the head form angle (C) are directly measured during the test. The head form flexion angle is calculated by summing the fore (A) and head Form (C) angles. After the calculations, all rotations are digitally filtered using the SAE J211 CFC180 and the pendulum acceleration is digitally filtered using the SAE J211 CFC 60.

f. Abdomen

TABLE 6.—LUMBAR PENDULUM REDUCTION IN IMPACT VELOCITY FROM TIME OF CONTACT WITH THE DECELERATION BLOCK

Time (ms)	Pendulum Delta V (m/s)
0.00–1.00	0.00 to − 0.05.
2.70–3.70	− 0.24 to − 0.425.
24.50–27.0	− 5.80 to − 6.50.

This calibration test is performed on a fully assembled, seated dummy. The abdomen would be impacted laterally at 4.0 m/s by a 49 CFR Part 572, Subpart E, 23.4 kg pendulum that has an impact face configured to replicate a horizontally-oriented 70 mm high, 150 mm wide, and 60–80 mm deep rigid block simulating a vehicle armrest. The midsaggital plane of the dummy is perpendicular to the direction of impact. The following requirements would have to be met:

1. The maximum pendulum impact force measured by the pendulum-mounted accelerometer must be between 4,000 N and 4,800 N, between 10.60 to 13.00 ms from time zero,

2. The sum of the forces of the three abdominal load sensors must be not less than 2,200 N and not more than 2,700 N at any time between 10.0 ms and 12.3 ms from time zero.

g. Pelvis

This calibration test would be performed on a fully assembled, seated dummy. The dummy pelvis would be impacted by the 49 CFR Part 572, Subpart E, 23.4 kg pendulum at a velocity of 4.3 m/s. The midsagittal plane of the dummy is perpendicular to the direction of impact and the centerline of the impactor is aligned within 5 mm of the center of the H point.

1. The maximum impact force measured by the pendulum accelerometer would be not less than 4800 N and not more than 5500 N, occurring between 10.3 and 15.5 ms from time zero.

2. Maximum pubic force would have to be 1310 N and not more than 1490 N occurring between 9.90 and 15.9 ms from time zero.

XII. Other Advantages

The agency tentatively concludes that the improved biofidelity and additional injury assessment capability of the ES–2re compared to the other commercially available mid-size male side impact test dummies supports a decision to adopt the ES–2re into 49 CFR Part 572. The

dummy would allow for a better assessment of the risk of injury to human occupants than the currently-specified SID crash test dummy used in side impact testing. The availability of these additional features also are of crucial importance to the design, development and evaluation of the development of occupant protection systems in side impacts, particularly those involving inflatable air bag systems, as noted in the May 17, 2004 NPRM proposing to amend FMVSS No. 214, supra. The ES–2re test dummy is available today, and has been thoroughly evaluated for suitable reproducibility and repeatability of results.

Further, incorporation of the ES–2re test dummy into 49 CFR Part 572 would be a step toward harmonizing our regulations with non-U.S. regulations. The ES–2 dummy has not yet supplanted the EuroSID–1 dummy in Europe or elsewhere for use in regulations as of this time. However, based on a proposal from the Netherlands, the UN/ECE's Working Party on Passive Safety (GRSP) has recommended to the WP.29 that ECE Regulation No. 95 be amended to use the ES–2 dummy in place of the EuroSID–1.[15] The GRSP's proposal takes into account the modifications that NHTSA has done to ES–2 to fix the back plate problem, as well as other minor outstanding technical problems raised by other participants. If this is adopted, the European Union is expected to also amend its Directive 96/27/EC to use the ES–2 dummy. Adopting the ES–2re into part 572 would also accord with the practices of the European New Car Assessment Program (EuroNCAP) on side impact. EuroNCAP began using the ES–2 dummy with the injury criteria specified in EU 96/27/EC in February 2003.

[15] The UN/ECE World Forum for Harmonization of Vehicle Regulations (WP.29) administers several agreements relating to the global adoption of uniform technical regulations. An agreement, known as the 1958 Agreement, concerns the adoption of uniform technical prescriptions for wheeled vehicles, equipment and parts and the development of motor vehicle safety regulations for application primarily in Europe. UN-member countries and regional economic integration organizations set up by UN country members may participate in a full substantive capacity in the activities of WP.29 by becoming a Contracting Party to the Agreement. Various expert groups (e.g., the GRSP) within WP.29 make recommendations to WP.29 as to whether regulations should be adopted by the Contracting Parties to the 1958 Agreement. Under the 1958 Agreement, new Regulations and amendments to existing Regulations are established by a vote of two-thirds majority of Contracting Parties. The new Regulation or amendment becomes effective for all Contracting Parties that have not noticed the Secretary-General of their objection within six months after notification.

Rulemaking Analyses and Notices

Executive Order 12866 and DOT Regulatory Policies and Procedures

Executive Order 12866, ''Regulatory Planning and Review'' (58 FR 51735, October 4, 1993), provides for making determinations whether a regulatory action is ''significant'' and therefore subject to Office of Management and Budget (OMB) review and to the requirements of the Executive Order. This rulemaking action was not considered a significant regulatory action under Executive Order 12866. This rulemaking action was also determined not to be significant under the Department of Transportation's (DOT's) regulatory policies and procedures (44 FR 11034, February 26, 1979). The cost of an uninstrumented ES–2re is in the range of $54–57,000. Instrumentation would add approx. $43–47,000 for minimum requirements and approximately $80–84,000 for maximum instrumentation to the cost of the dummy.

This document proposes to amend 49 CFR Part 572 by adding design and performance specifications for a 50th percentile adult male side impact dummy that the agency may use in research and in compliance tests of the Federal side impact protection safety standards. If this proposed Part 572 rule becomes final, it would not impose any requirements on anyone. Businesses would be affected only if they choose to manufacture or test with the dummy. Because the economic impacts of this proposal are minimal, no further regulatory evaluation is necessary.

Regulatory Flexibility Act

Pursuant to the Regulatory Flexibility Act (5 U.S.C. 601 *et seq.*, as amended by the Small Business Regulatory Enforcement Fairness Act (SBREFA) of 1996), whenever an agency is required to publish a proposed or final rule, it must prepare and make available for public comment a regulatory flexibility analysis that describes the effect of the rule on small entities (*i.e.*, small businesses, small organizations, and small governmental jurisdictions), unless the head of the agency certifies the rule will not have a significant economic impact on a substantial number of small entities. The Small Business Administration's regulations at 13 CFR Part 121 define a small business, in part, as a business entity ''which operates primarily within the United States.'' (13 CFR 121.105(a)).

We have considered the effects of this rulemaking under the Regulatory Flexibility Act. I hereby certify that the proposed rulemaking action would not have a significant economic impact on a substantial number of small entities. This action would not have a significant economic impact on a substantial number of small entities because the addition of the test dummy to Part 572 would not impose any requirements on anyone. NHTSA would not require anyone to manufacture the dummy or to test vehicles with it.

National Environmental Policy Act

NHTSA has analyzed this proposal for the purposes of the National Environmental Policy Act and determined that it will not have any significant impact on the quality of the human environment.

Executive Order 13132 (Federalism)

Executive Order 13132 requires agencies to develop an accountable process to ensure ''meaningful and timely input by State and local officials in the development of regulatory policies that have federalism implications.'' ''Policies that have federalism implications'' is defined in the Executive Order to include regulations that have ''substantial direct effects on the States, on the relationship between the national government and the States, or on the distribution of power and responsibilities among the various levels of government.''

NHTSA has analyzed this proposed amendment in accordance with the principles and criteria set forth in Executive Order 13132. The agency has determined that this proposal does not have sufficient federalism implications to warrant consultation and the preparation of a Federalism Assessment.

Civil Justice Reform

This proposed rule would not have any retroactive effect. Under 49 U.S.C. 30103, whenever a Federal motor vehicle safety standard is in effect, a State may not adopt or maintain a safety standard applicable to the same aspect of performance which is not identical to the Federal standard, except to the extent that the state requirement imposes a higher level of performance and applies only to vehicles procured for the State's use. 49 U.S.C. 30161 sets forth a procedure for judicial review of final rules establishing, amending, or revoking Federal motor vehicle safety standards. That section does not require submission of a petition for reconsideration or other administrative proceedings before parties may file suit in court.

Paperwork Reduction Act

Under the Paperwork Reduction Act of 1995, a person is not required to respond to a collection of information by a Federal agency unless the collection displays a valid control number from the Office of Management and Budget (OMB). This proposed rule would not have any requirements that are considered to be information collection requirements as defined by the OMB in 5 CFR Part 1320.

National Technology Transfer and Advancement Act

Section 12(d) of the National Technology Transfer and Advancement Act of 1995 (NTTAA), Public Law 104–113, section 12(d) (15 U.S.C. 272) directs NHTSA to use voluntary consensus standards in its regulatory activities unless doing so would be inconsistent with applicable law or otherwise impractical. Voluntary consensus standards are technical standards (*e.g.*, materials specifications, test methods, sampling procedures, and business practices) that are developed or adopted by voluntary consensus standards bodies. The NTTAA directs NHTSA to provide Congress, through OMB, explanations when the agency decides not to use available and applicable voluntary consensus standards. NHTSA searched for but did not find voluntary consensus standards relevant to this proposed rule.

Unfunded Mandates Reform Act

Section 202 of the Unfunded Mandates Reform Act of 1995 (UMRA), Pub. L. 104–4, Federal requires agencies to prepare a written assessment of the costs, benefits, and other effects of proposed or final rules that include a Federal mandate likely to result in the expenditure by State, local, or tribal governments, in the aggregate, or by the private sector, of more than $100 million annually (adjusted for inflation with base year of 1995). Before promulgating a NHTSA rule for which a written statement is needed, section 205 of the UMRA generally requires the agency to identify and consider a reasonable number of regulatory alternatives and adopt the least costly, most cost-effective, or least burdensome alternative that achieves the objectives of the rule.

This proposed rule would not impose any unfunded mandates under the UMRA. This proposed rule would not meet the definition of a Federal mandate because it would not impose requirements on anyone. It would amend 49 CFR Part 572 by adding design and performance specifications for a side impact dummy that the agency may use in the Federal motor vehicle safety standards. If this proposed rule becomes final, it would affect only those businesses that choose to manufacture or test with the dummy. It would not result in costs of $100 million or more to either State, local, or tribal governments, in the aggregate, or to the private sector.

Plain Language

Executive Order 12866 requires each agency to write all rules in plain language. Application of the principles of plain language includes consideration of the following questions:

—Has the agency organized the material to suit the public's needs?
—Are the requirements in the rule clearly stated?
—Does the rule contain technical language or jargon that is not clear?
—Would a different format (grouping and order of sections, use of headings, paragraphing) make the rule easier to understand?
—Would more (but shorter) sections be better?
—Could the agency improve clarity by adding tables, lists, or diagrams?
—What else could the agency do to make this rulemaking easier to understand?

If you have any responses to these questions, please include them in your comments on this NPRM.

Regulation Identifier Number

The Department of Transportation assigns a regulation identifier number (RIN) to each regulatory action listed in the Unified Agenda of Federal Regulations. The Regulatory Information Service Center publishes the Unified Agenda in April and October of each year. You may use the RIN contained in the heading at the beginning of this document to find this action in the Unified Agenda.

Public Participation

How Do I Prepare and Submit Comments?

Your comments must be written and in English. To ensure that your comments are correctly filed in the Docket, please include the docket number of this document in your comments.

Your comments must not be more than 15 pages long. (49 CFR 553.21). NHTSA established this limit to encourage you to write your primary comments in a concise fashion. However, you may attach necessary additional documents to your comments. There is no limit on the length of the attachments.

Please submit two copies of your comments, including the attachments, to Docket Management at the address given above under **ADDRESSES.**

You may also submit your comments to the docket electronically by logging onto the Dockets Management System Web site at *http://dms.dot.gov.* Click on ''Help & Information'' or ''Help/Info'' to obtain instructions for filing the document electronically.

How Can I Be Sure That My Comments Were Received?

If you wish Docket Management to notify you upon its receipt of your comments, enclose a self-addressed, stamped postcard in the envelope containing your comments. Upon receiving your comments, Docket Management will return the postcard by mail.

How Do I Submit Confidential Business Information?

If you wish to submit any information under a claim of confidentiality, you should submit three copies of your complete submission, including the information you claim to be confidential business information, to the Chief Counsel, NHTSA, at the address given above under **FOR FURTHER INFORMATION CONTACT**. In addition, you should submit two copies, from which you have deleted the claimed confidential business information, to Docket Management at the address given above under **ADDRESSES**. When you send a comment containing information claimed to be confidential business information, you should include a cover letter setting forth the information specified in our confidential business information regulation. (49 CFR Part 512.)

Will the Agency Consider Late Comments?

NHTSA will consider all comments that Docket Management receives before the close of business on the comment closing date indicated above under DATES. To the extent possible, the agency will also consider comments that Docket Management receives after that date. If Docket Management receives a comment too late for the agency to consider it in developing a final rule (assuming that one is issued), the agency will consider that comment as an informal suggestion for future rulemaking action.

How Can I Read the Comments Submitted by Other People?

You may read the comments received by Docket Management at the address given above under **ADDRESSES**. The

hours of the Docket are indicated above in the same location.

You may also see the comments on the Internet. To read the comments on the Internet, take the following steps:

1. Go to the Docket Management System (DMS) Web page of the Department of Transportation (*http://dms.dot.gov/*).

2. On that page, click on ''search.''

3. On the next page (*http://dms.dot.gov/search/*), type in the four-digit docket number shown at the beginning of this document. Example: If the docket number were ''NHTSA–1998–1234,'' you would type ''1234.'' After typing the docket number, click on ''search.''

4. On the next page, which contains docket summary information for the docket you selected, click on the desired comments. You may download the comments. Although the comments are imaged documents, instead of word processing documents, the ''pdf'' versions of the documents are word searchable.

Please note that even after the comment closing date, NHTSA will continue to file relevant information in the Docket as it becomes available. Further, some people may submit late comments. Accordingly, the agency recommends that you periodically check the Docket for new material.

Anyone is able to search the electronic form of all comments received into any of our dockets by the name of the individual submitting the comment (or signing the comment, if submitted on behalf of an association, business, labor union, etc.). You may review DOT's complete Privacy Act Statement in the **Federal Register** published on April 11, 2000 (Volume 65, Number 70; Pages 19477–78) or you may visit *http://dms.dot.gov.*

List of Subjects in 49 CFR Part 572

Motor vehicle safety, Incorporation by reference.

In consideration of the foregoing, NHTSA is proposing to amend 49 CFR Part 572 as follows:

PART 572—ANTHROPOMORPHIC TEST DUMMIES

1. The authority citation for Part 572 would continue to read as follows:

Authority: 49 U.S.C. 322, 30111, 30115, 30117 and 30166; delegation of authority at 49 CFR 1.50.

2. 49 CFR part 572 would be amended by adding and reserving a new subpart T.

3. 49 CFR part 572 would be amended by adding a new subpart U, consisting of §§ 572.180 through 572.189.

The added subparts would read as follows:

Subpart T—[Reserved]

Subpart U—ES-2re Side Impact Crash Test Dummy, 50th Percentile Adult Male

Sec.
572.180 Incorporated materials.
572.181 General description.
572.182 Head assembly.
572.183 Neck assembly.
572.184 Shoulder assembly.
572.185 Thorax assembly.
572.186 Abdomen.
572.187 Lumbar spine.
572.188 Pelvis assembly.
572.189 Instrumentation and test conditions.
Appendix A to Subpart U of Part 572—Figures

Subpart U, ES-2re Side Impact Crash Test Dummy, 50th Percentile Adult Male

§ 572.180 Incorporated materials.

(a) The following materials are hereby incorporated into this Subpart by reference:

(1) A drawings and inspection package entitled ''Drawings and Specifications for the ES-2re Side Impact Test Dummy, 50th percentile, August 2004'', consisting of:

(i) Drawing No. 175–0000 ES-2re Dummy Assembly, incorporated by reference in § 572.xxx;

(ii) Drawing No. 175–1000 Head Assembly, incorporated by reference in § 572.182;

(iii) Drawing No. 175–2000, Neck Assembly, incorporated by reference in § 572.183;

(iv) Drawing No. 175–3000, Shoulder Assembly, incorporated by reference in § 572.184;

(v) Drawing No. 175–4000, Upper Torso Assembly, incorporated by reference in § 572.185;

(vi) Drawing No. 175–5000, Abdomen Assembly, incorporated by reference in § 572.186;

(vii) Drawing No. 175–5500 Lumbar Assembly, incorporated by reference in § 572.187;

(viii) Drawing No. 175–6000 Pelvis Assembly, incorporated by reference in § 572.188;

(ix) Drawing No. 175–7000–1, Complete Leg Assembly—left, incorporated by reference in § 572.181;

(x) Drawing No. 175–7000–2, Complete Leg Assembly—right, incorporated by reference in § 572.181;

(xi) Drawing No. 175–3500 Complete Arm Assembly—left, incorporated by reference in § 572.181; and

(xii) Drawing No. 175–3800 Complete Arm Assembly—right, incorporated by reference in § 572.181.

(2) A procedures manual entitled ''Procedures for Assembly, Disassembly and Inspection (PADI) of the ES-2re Side Impact Test Dummy, August 2004'', incorporated by reference in § 572.181;

(3) SAE Recommended Practice J211, Rev. Mar 95 ''Instrumentation for Impact Tests—Part 1—Electronic Instrumentation'';

(4) SAE J1733 of 1994–12 ''Sign Convention for Vehicle Crash Testing.''

(b) The Director of the Federal Register approved the materials incorporated by reference in accordance with 5 U.S.C. 552(a) and 1 CFR part 51. Copies of the materials may be inspected at NHTSA's Technical Reference Library, 400 Seventh Street S.W., Room 5109, Washington, DC, or at the National Archives and Records Administration (NARA). For information on the availability of this material at NARA, call (202) 741–6030, or go to: *http://www.archives.gov/federal_register/code_of_federal_regulations/ibr_locations.html.*

(c) The incorporated materials are available as follows:

(1) The Drawings and Specifications for the ES–2re Side Impact Crash Test Dummy, 50th Percentile Adult Male, August xx, 2004,'' referred to in paragraph (a)(1) of this section are available in electronic format through the DOT docket management system and in paper format from Leet-Melbrook, Division of New RT, 18810 Woodfield Road, Gaithersburg, MD 20879, (301) 670–0090.

(2) The SAE materials referred to in paragraphs (a)(3) and (a)(4) of this section are available from the Society of Automotive Engineers, Inc., 400 Commonwealth Drive, Warrendale, PA 15096.

§ 572.181 General Description.

(a) The ES-2re Side Impact Crash Test Dummy, 50th Percentile Adult Male, is defined by drawings and specifications containing the following materials:

(1) Technical drawings and specifications package P/N 175–0000, dated August 2004, the titles of which are listed in Table A;

TABLE A

Component assembly	Drawing No.
Head Assembly	175–1000
Neck Assembly	175–2000
Shoulder Assembly	175–3000
Upper Torso Assembly	175–4000
Abdomen	175–5000
Pelvis Assembly	175–6000
Lumbar Spine Assembly	175–5500
Complete Leg Assembly—left	175–7000–1
Complete Leg Assembly—right	175–7000–2
Complete Arm Assembly—left	175–3500
Complete Arm Assembly—right	175–3800

(2) The ES-2re Crash Test Dummy Parts List, dated August 2004, and containing 8 pages, incorporated by reference in § 572.180;

(3) A listing of available transducers-crash test sensors for the ES-2re Crash Test Dummy is shown in drawing 175–0000 sheet 4 of 4, dated August 2004, incorporated by reference in § 572.180;

(4) Procedures for Assembly, Disassembly and Inspection (PADI) of the ES-2re Side Impact Crash Test Dummy, August 2004, incorporated by reference in § 572.180,

(5) Sign convention for signal outputs reference document SAE 1733 Information Report, titled ''Sign Convention for Vehicle Crash Testing'' dated July 15, 1986.

(b) Exterior dimensions of ES-2re test dummy are shown in drawing 175–0000 sheet 3 of 4, dated August 2004.

(c) Weights and center of gravity locations of body segments (head, neck, upper and lower torso, arms and upper and lower segments) are shown in drawing 175–0000 sheet 2 of 4, dated August 2004.

(d) Adjacent segments are joined in a manner such that, except for contacts existing under static conditions, there is no additional contact between metallic elements of adjacent body segments throughout the range of motion.

(e) The structural properties of the dummy are such that the dummy conforms to this subpart in every respect before use in any test similar to those proposed in Standard 214, Side Impact Protection and Standard 201, Occupant Protection in Interior Impact.

§ 572.182 Head assembly.

(a) The head assembly consists of the head (drawing 175–1000), the neck upper transducer structural replacement (drawing 175–1010), and a set of three (3) accelerometers in conformance with specifications in § 572.189(b) and mounted as shown in drawing 175–0000 (sheet 4 of 4). When tested to the test procedure specified in paragraph (b) of this section, the head assembly shall meet performance requirements specified in paragraph (c) of this section.

(b) *Test procedure.* The head shall be tested per procedure specified in 49 CFR 572.112(a).

(c) *Performance criteria.* (1) When the head assembly is dropped in accordance with § 572.112(a), the measured peak resultant acceleration shall be between 125 g's and 155 g's;

(2) The resultant acceleration-time curve shall be unimodal to the extent that oscillations occurring after the main acceleration pulse shall not exceed 15% (zero to peak) of the main pulse;

(3) The fore-and-aft acceleration vector shall not exceed 15 g's.

§ 572.183 Neck assembly.

(a) The neck assembly consists of parts shown in drawing 175–2000. For purposes of this test, the neck is mounted within the headform assembly 175–9000 as shown in Figure U1 in Appendix A to this subpart. When subjected to test procedures specified in paragraph (b) of this section, the neck-headform assembly shall meet performance requirements specified in paragraph (c) of this section.

(b) *Test procedure.* (1) Soak the neck-headform-flexion transducer assembly in a test environment as specified in § 572.189(n);

(2) Attach the neck-headform assembly to the Part 572 subpart E pendulum test fixture as shown in Figure U2–A in Appendix A to this subpart, so that the midsagittal plane of the neck-headform assembly is vertical and perpendicular to the plane of motion of the pendulum longitudinal centerline shown in Figure U2–A;

(3) Release the pendulum from a height sufficient to allow it to fall freely to achieve an impact velocity of 3.4+/−0.1 m/s measured at the center of the pendulum accelerometer (Figure 15 of Part 572) at the time the pendulum makes contact with the decelerating mechanism;

(4) Allow the neck to flex without the neck-headform assembly making contact with any object;

(5) Time zero is defined in § 572.189(j);

(6) Allow a period of at least thirty (30) minutes between successive tests on the same neck assembly.

(c) *Performance criteria.* (1) The pendulum deceleration pulse is to be characterized in terms of decrease in velocity as determined by integrating the filtered pendulum acceleration response from time-zero. The velocity-time history of the pendulum falls inside the corridor determined by the upper and lower boundaries specified in Table A1;

TABLE A1.—ES–2re NECK CERTIFICATION PENDULUM VELOCITY CORRIDOR

Time (ms)	Velocity (m/s)
Upper boundary	
1.0	0.00
3.0	−0.25
14.0	−3.20
Lower boundary	
0.0	−0.05
2.5	−0.38
13.5	−3.7
17.0	−3.7

(2) The maximum translation-rotation in the lateral direction of the reference plane of the headform (175–9000) as shown in Figure U2–B in Appendix A to this suppart, shall be 52 to 57 degrees with respect to the longitudinal axis of the pendulum occurring between 54 and 64 ms from time zero. Translation-rotation of the headform-neck assembly and the neck angle with respect to the pendulum shall be measured with potentiometers specified in § 572.189(c), installed as shown in drawing 175–9000, and calculated per procedure specified in Figure U2–B;

(3) The decaying headform translation-rotation vs. time curve shall cross the zero angle with respect to its initial position at time of impact relative to the pendulum centerline between 55 ms to 75 ms after the time the peak translation-rotation value is reached.

§ 572.184 Shoulder assembly.

(a) The shoulder (175–3000) is part of the upper torso assembly shown in drawing 175–4000. When subjected to impact tests specified in paragraph (b) of this section, the shoulder assembly shall meet performance requirements of paragraph (c) of this section.

(b) *Test procedure.* (1) Soak the dummy assembly, without suit and shoulder foam cap (175–010), in a test environment as specified in § 572.189(n);

(2) The dummy is seated, as shown in Figure U3 in Appendix A to this subpart on a flat, horizontal, rigid surface covered by two overlaid teflon 2 mm thick sheets and with no back support of the dummy's torso. The dummy's torso spine backplate is vertical within +/−2 degrees and the midsagittal plane of thorax is positioned perpendicular to the direction of the plane of motion of the impactor at contact with the shoulder. The arms are oriented forward at 40+/−2 degrees to the vertical, pointing downward. The dummy's legs are horizontal and symmetrical about the midsagittal plane with the distance between the innermost point on the opposite ankle at 100 +/−5 mm;

(3) The impactor is the same as defined in § th 572.189(a);

(4) The impactor is guided, if needed, so that at contact with the shoulder, its longitudinal axis is within +/−0.5 degrees of a horizontal plane and perpendicular (+/−0.5 degrees) to the midsagittal plane of the dummy and the centerpoint on the impactor's face is within 5 mm of the center of the upper arm pivot bolt (5000040) at contact with the test dummy, as shown in Figure U3;

(5) The impactor impacts the dummy's shoulder at 4.3+/−0.1 m/s.

(c) *Performance criteria.* The peak acceleration of the impactor is between 7.5 g's and 10.5 g's during the pendulum's contact with the dummy.

§ 572.185 Thorax (upper torso) assembly.

(a) For purposes of this test, the rib modules (175–4002), which are part of the thorax assembly (175–4000), are tested as individual units. When subjected to test procedures specified in paragraph (b) of this section, the rib modules shall meet performance requirements specified in paragraph (c) of this section. Each rib is tested to both the 3.0 m/s and the 4.0 m/s tests described in paragraphs (b)(5)(i) and (ii) of this section.

(b) *Test procedure.* (1) Soak the rib modules (175–4002) in a test environment as specified in § 572.189(n);

(2) Mount the rib module rigidly in a drop test fixture as shown in Figure U6 in Appendix A to this subpart with the impacted side of the rib facing up;

(3) The drop test fixture contains a free fall guided mass of 7.78+/−0.01 kg that is of rigid construction and with a flat impact face 150+/−1.0 mm in diameter;

(4) Align the vertical longitudinal centerline of the drop mass so that the centerpoint of the downward-facing flat surface is aligned to impact the centerline of the rib rail guide system within ± 2.5 mm.

(5) The impacting mass is dropped from a height to impact the rib at:

(i) 3.0 ± 0.1 m/s and

(ii) 4.0 ± 0.1 m/s.

(c) *Performance criteria.* (1) Each of the rib modules shall deflect as specified in paragraphs (c)(1)(i) and (ii) of this section, with the deflection measurements made with the internal rib module position transducer specified in § 572.189(d):

(i) Not less than 36 mm and not more than 40 mm when impacted by the dropped mass at 3 m/s; and

(ii) Not less than 46 mm and not more than 51 mm when impacted by the dropped mass at 4 m/s.

(2) [Reserved]

§ 572.186 Abdomen assembly.

(a) The abdomen assembly (175–5000) is part of the dummy assembly shown in drawing 175–0000 including load sensors specified in § 572.189(e). When subjected to tests procedures specified in paragraph (b) of this section, the abdomen assembly shall meet performance requirements specified in paragraph (c) of this section.

(b) *Test procedure.* (1) Soak the dummy assembly (175–0000), without suit, as specified in § 572.189(n);

(2) The dummy is seated as shown in Figure U4 in Appendix A to this subpart;

(3) The abdomen impactor is the same as specified in § 572.189(a) except that on its impact surface is affixed a special purpose rigid block whose weight is 1.0 ± 0.01 kg. The block is 70 mm high, 150 mm wide and 60 to 80 mm deep. The impact surface is flat with an edge radius of 4 to 5 mm. The block's wide surface is horizontally oriented and centered on the longitudinal axis of the probe's impact face as shown in Figure U4–A in Appendix A to this subpart;

(4) The impactor is guided, if needed, so that at contact with the abdomen its longitudinal axis is within ± 0.5 degrees of a horizontal plane and perpendicular ± 0.5 degrees to the midsagittal plane of the dummy and the centerpoint on the impactor's face is within 5 mm of the center point of the middle load measuring sensor in the abdomen as shown in Figure U4;

(5) The impactor impacts the dummy's abdomen at 4.0 m/s ± 0.1 m/s.

(c) *Performance criteria.* (1) The sum of the forces of the three abdominal load sensors, specified in § 572.189(e), shall be not less than 2200 N and not more than 2700 N at any time between 10 ms and 12.3 ms from time zero as defined in § 572.189(k). The calculated sum of the three load cell forces must be concurrent in time.

(2) Maximum impactor force (impact probe acceleration multiplied by its mass) is not less than 4000 N and not more than 4800 N occurring between 10.6 ms and 13.0 ms from time zero.

§ 572.187 Lumbar spine.

(a) The lumbar spine assembly consists of parts shown in drawing 175–5500. For purposes of this test, the lumbar spine is mounted within the headform assembly 175–9000 as shown in Figure U1 in Appendix A to this subpart. When subjected to tests procedures specified in paragraph (b) of this section, the lumbar spine-headform assembly shall meet performance requirements specified in paragraph (c) of this section.

(b) *Test procedure.* (1) Soak the lumbar spine-headform assembly in a test environment as specified in § 572.189(n);

(2) Attach the lumbar spine-headform assembly to the Part 572 pendulum test fixture per procedure in § 572.183(b)(2) and as shown in Figure U2–A in Appendix A to this subpart;

(3) Release the pendulum from a height sufficient to allow it to fall freely to achieve an impact velocity of 6.05 +/−0.1 m/s measured at the center of the pendulum accelerometer (Figure 15 of Part 572) at the time the pendulum makes contact with its decelerating mechanism;

(4) Allow the lumbar spine to flex without the lumbar spine or the headform making contact with any object;

(5) Time zero is defined in § 572.189(j);

(6) Allow a period of at least thirty (30) minutes between successive tests on the same lumbar spine assembly.

(c) *Performance criteria.* (1) The pendulum deceleration pulse is to be characterized in terms of decrease in velocity as determined by integrating

the filtered pendulum acceleration response from time-zero. The velocity-time history of the pendulum falls inside the corridor determined by the upper and lower boundaries specified in Table B1.

TABLE B1.—ES–2re LUMBAR SPINE CERTIFICATION PENDULUM VELOCITY CORRIDOR

Time (ms)	Velocity (m/s)
Upper boundary	
1.0	0.00
3.7	−0.24
27.0	−5.80
Lower boundary	
0.0	−0.05
2.7	−0.43
24.5	−6.50
30.0	−6.50

(2) The maximum translation-rotation in the lateral direction of the reference plane of the headform (175–9000) as shown in Figure U2–B in Appendix A to this subpart, shall be 45 to 55 degrees with respect to the longitudinal axis of the pendulum occurring between 39 and 53 ms from time zero. Translation-rotation of the headform-neck assembly shall be measured with potentiometers specified in § 572.189(c), installed as shown in drawing 175–9000, and calculated per procedure specified in Figure U2–B.

(3) The decaying headform translation-rotation vs. time curve shall cross the zero angle with respect to its initial position at impact relative to the pendulum centerline between 40 ms to 65 ms after the time the peak translation-rotation value is reached.

§ 572.188 Pelvis.

(a) The pelvis (175–6000) is part of the torso assembly shown in drawing 175–0000. The pelvis is equipped with a set of three (3) accelerometers and a pubic symphysis load sensor in conformance with specifications in § 572.189(b) and § 572.189(f) respectively and mounted as shown in drawing (175–0000 sheet 4). When subjected to tests procedures specified in paragraph (b) of this section, the pelvis assembly shall meet performance requirements specified in paragraph (c) of this section.

(b) *Test procedure.* (1) Soak the dummy assembly (175–0000) without suit as specified in § 572.189(n);

(2) The dummy is seated as specified in Figure U5 in Appendix A to this subpart;

(3) The pelvis impactor is the same as specified in § 572.189(a);

(4) The impactor is guided, if needed, so that at contact with the pelvis its longitudinal axis is within ± 0.5 degrees of a horizontal plane and perpendicular to the midsagittal plane of the dummy and the centerpoint on the impactor's face is within 5 mm of the center of the H-point in the pelvis, as shown in Figure U5;

(5) The impactor impacts the dummy's pelvis at 4.3 +/− 0.1 m/s.

(c) *Performance criteria.* (1) The impactor force (probe acceleration multiplied by its mass) shall be not less than 4,800 N and not more than 5,500 N, occurring between 10.3 ms and 15.5 ms from time zero as defined in § 572.189(k);

(2) The pubic symphysis load, measured with load cell specified in § 572.189(f) shall be not less than 1,310 N and not more than 1,490 N occurring between 9.9 ms and 15.9 ms from time zero as defined in § 572.189(k).

§ 572.189 Instrumentation and test conditions.

(a) The test probe for lateral shoulder, abdomen, and pelvis impact tests is the same as that specified in § 572.36(a) and the impact probe has a minimum mass moment of inertia in yaw of 9,000 kg-cm², a free air resonant frequency not less than 1,000 Hz and the probe's end opposite to the impact face has provisions to mount an accelerometer with its sensitive axis collinear with the longitudinal axis of the probe.

(b) Accelerometers for the head, the thoracic spine, and the pelvis conform to specifications of SA572–S4.

(c) Rotary potentiometer for the neck and lumbar spin conforms to SA572–53.

(d) Linear position transducer for the thoracic rib conforms to SA572–S54.

(e) Load sensors for the abdomen conform to specifications of SA572–S75.

(f) Load sensor for the pubic symphysis conforms to specifications of SA572–77.

(g) Load sensor for the lumbar spine conforms to specifications of SA572–76.

(h) Instrumentation and sensors conform to the Recommended Practice SAE J–211 (Mar, 1995)—Instrumentation for Impact Test unless noted otherwise.

(i) All instrumented response signal measurements shall be treated to the following specifications:

(1) Head acceleration—Digitally filtered CFC 1000;

(2) Neck and lumbar spine translation-rotations—Digitally filtered CFC 180;

(3)—Neck and lumbar spine pendulum accelerations—Digitally filtered CFC 60;

(4) Pelvis, shoulder and abdomen impactor accelerations—Digitally filtered CFC—180;

(5) Abdominal and pubic symphysis force—Digitally filtered at CFC 600;

(6) Thorax deflection-Digitally filtered CFC 180.

(j)(1) Filter the pendulum acceleration data using a SAE J211 CFC 60 filter.

(2) Determine the time when the filtered pendulum accelerometer data first crosses the −10 g level (T_{10}).

(3) Calculate time-zero:

$T0 = T_{10} - T_{m.}$,

Where:

T_m = 1.417 ms for the Neck Test

= 1.588 ms for the Lumbar Spine Test

(4) Set the data time-zero to the sample number nearest to the calculated T0.

(k)(1) Filter the pendulum acceleration data using a SAE J211 CFC 60 filter.

(2) Determine the time when the filtered pendulum accelerometer data first crosses the −1.0 m/s² (−.102 g) acceleration level (T0).

(3) Set the data time-zero to the sample number of the new T0.

(l) Mountings for the head, spine and pelvis accelerometers shall have no resonance frequency within a range of 3 times the frequency range of the applicable channel class.

(m) Limb joints of the test dummy are set at the force between 1 to 2 G's, which just supports the limb's weight when the limbs are extended horizontally forward. The force required to move a limb segment does not exceed 2 G's throughout the range of the limb motion.

(n) Performance tests are conducted, unless specified otherwise, at any temperature from 20.6 to 22.2 degrees C. (69 to 72 degrees F.) and at any relative humidity from 10 percent to 70 percent after exposure of the dummy to those conditions for a period of not less than 4 hours.

BILLING CODE 4910–59–P

Appendix A to Subpart U of Part 572—Figures

Figure U1

NECK/LUMBAR SPINE ATTACHED TO HEADFORM

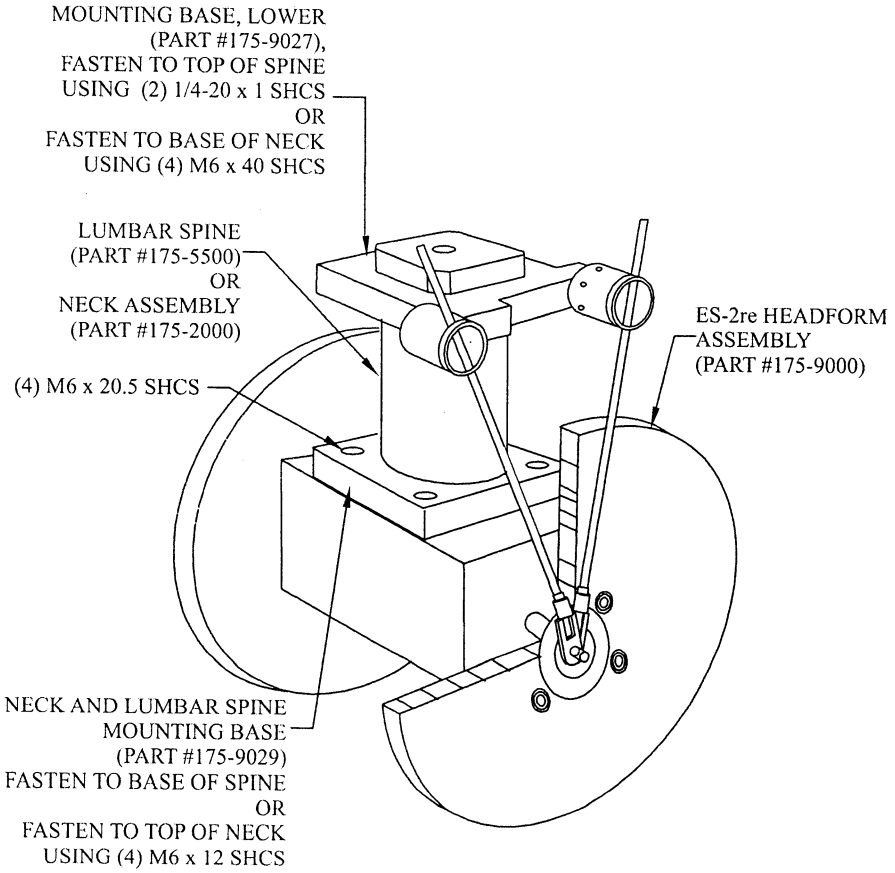

Figure U2-A

NECK/LUMBAR SPINE/HEADFORM ATTACHED TO PENDULUM

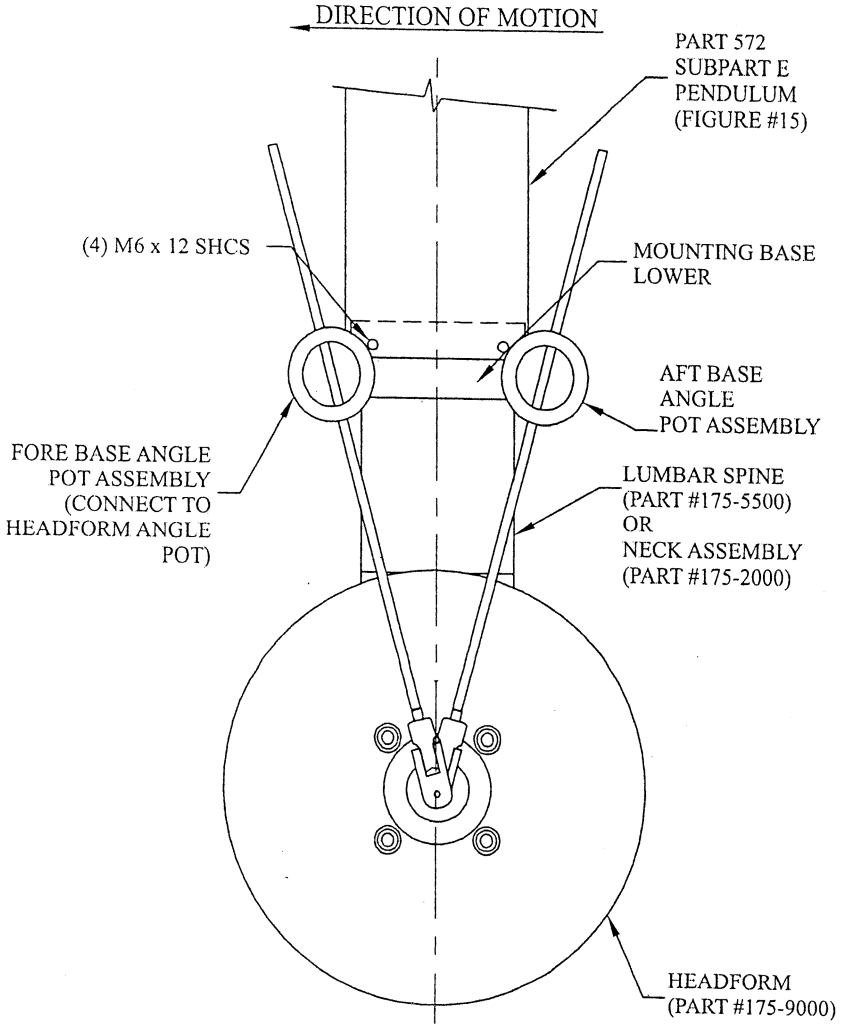

Figure U2-B

ANGLE MEASUREMENTS WITH HEADFORM SET-UP

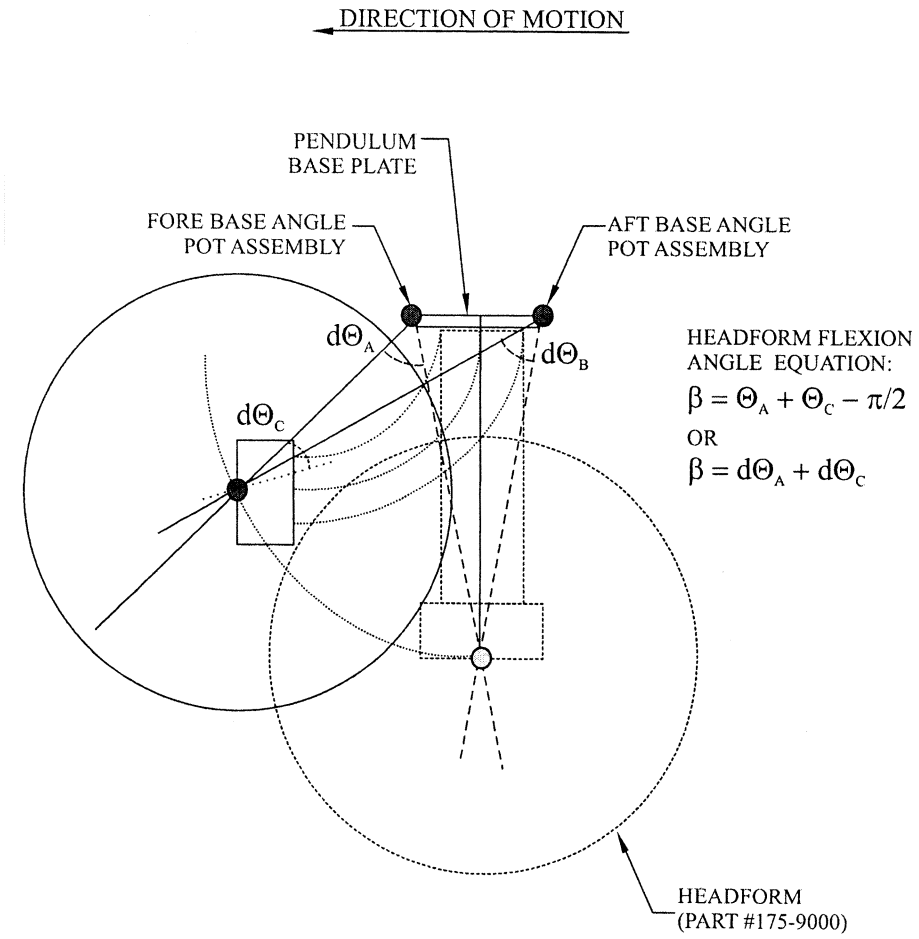

Figure U3
SHOULDER IMPACT

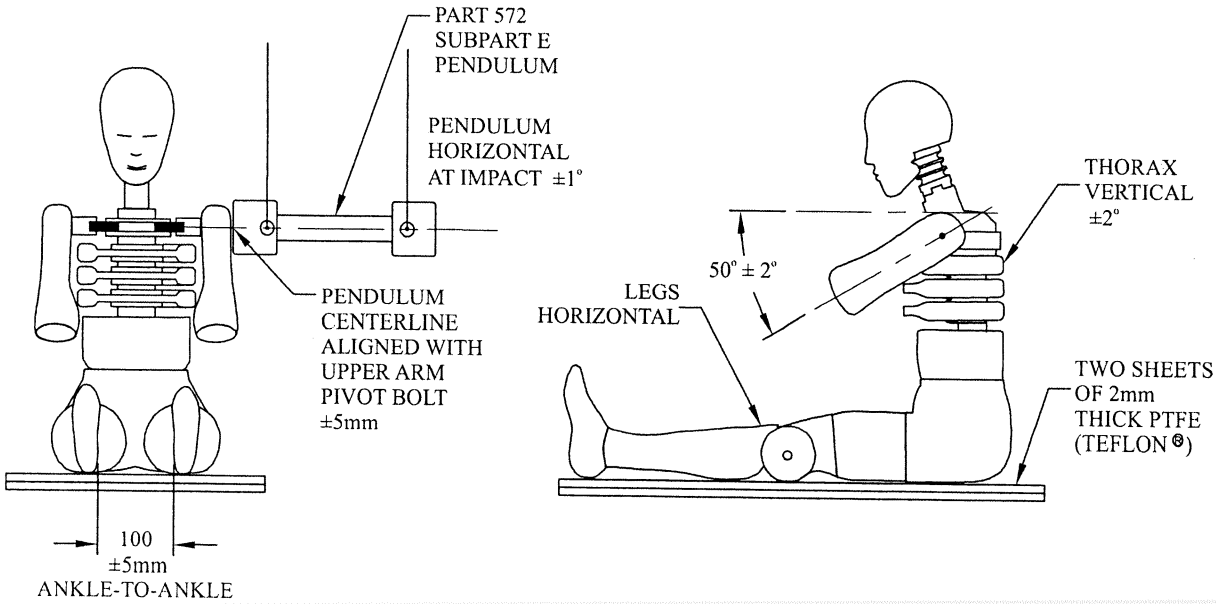

Figure U4
ABDOMEN IMPACT

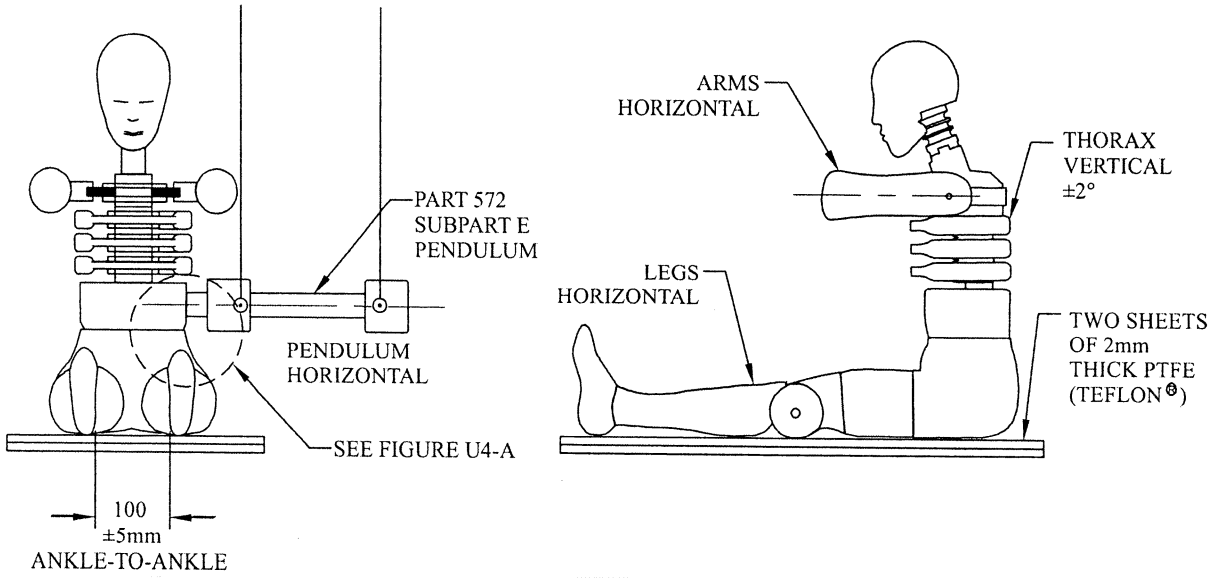

Figure U4-A

ABDOMEN IMPACT - VIEW A

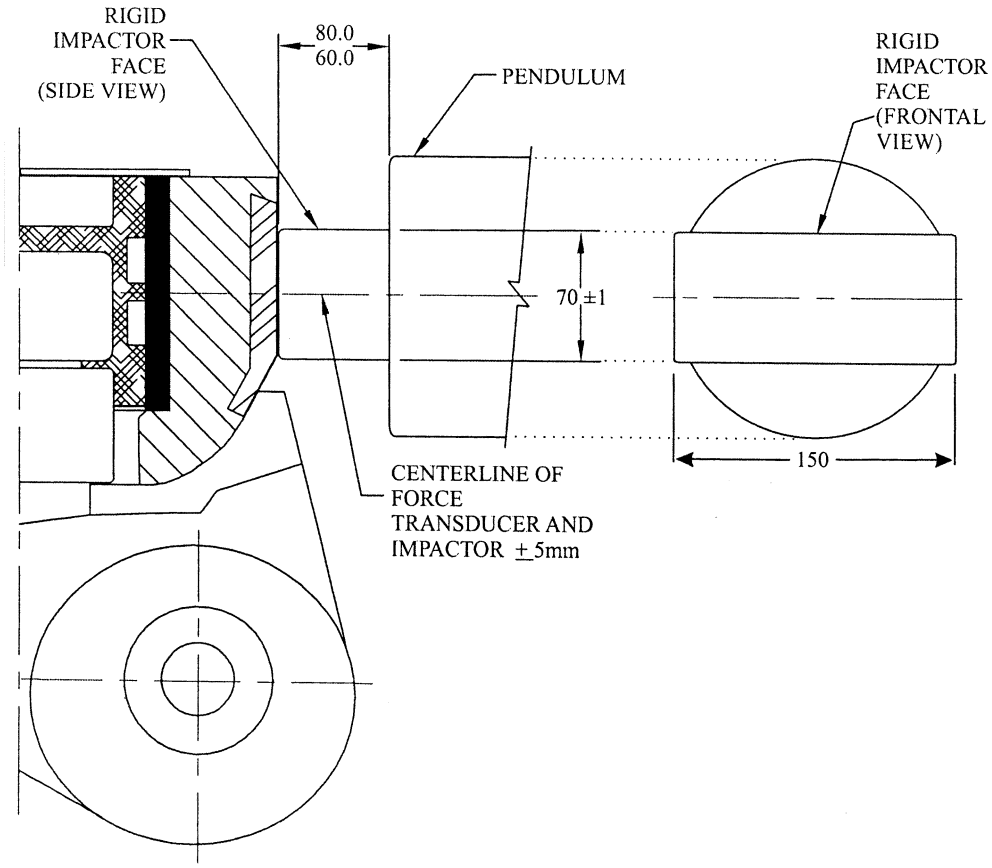

ABDOMEN TEST SET-UP

Figure U5
PELVIS IMPACT

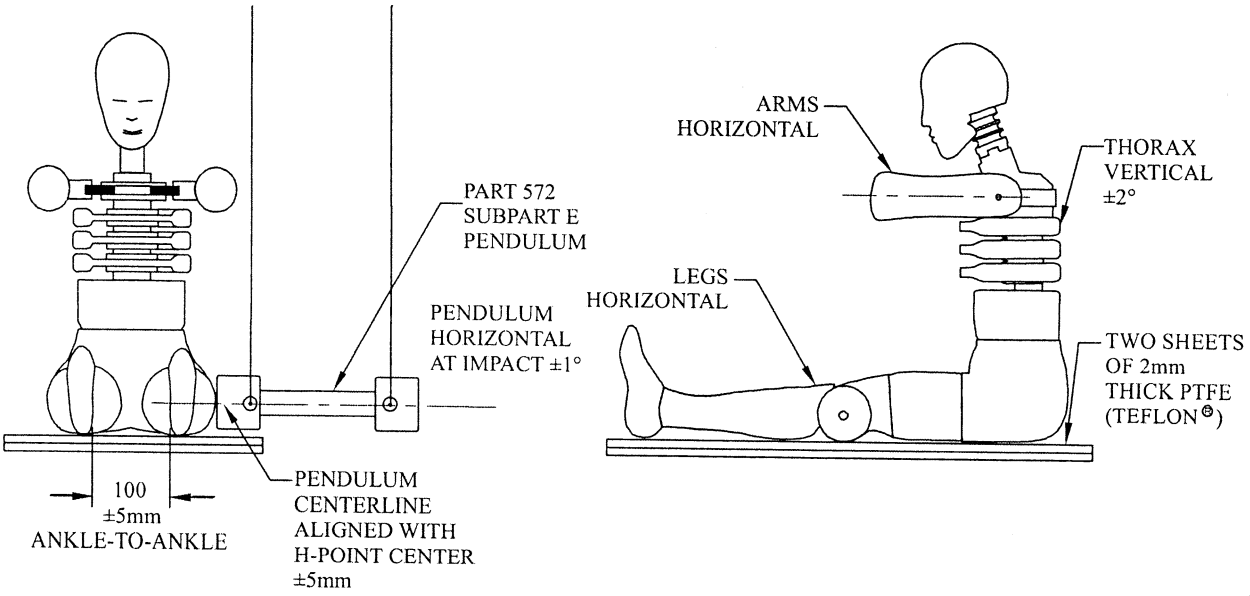

Figure U6
RIB DROP TEST

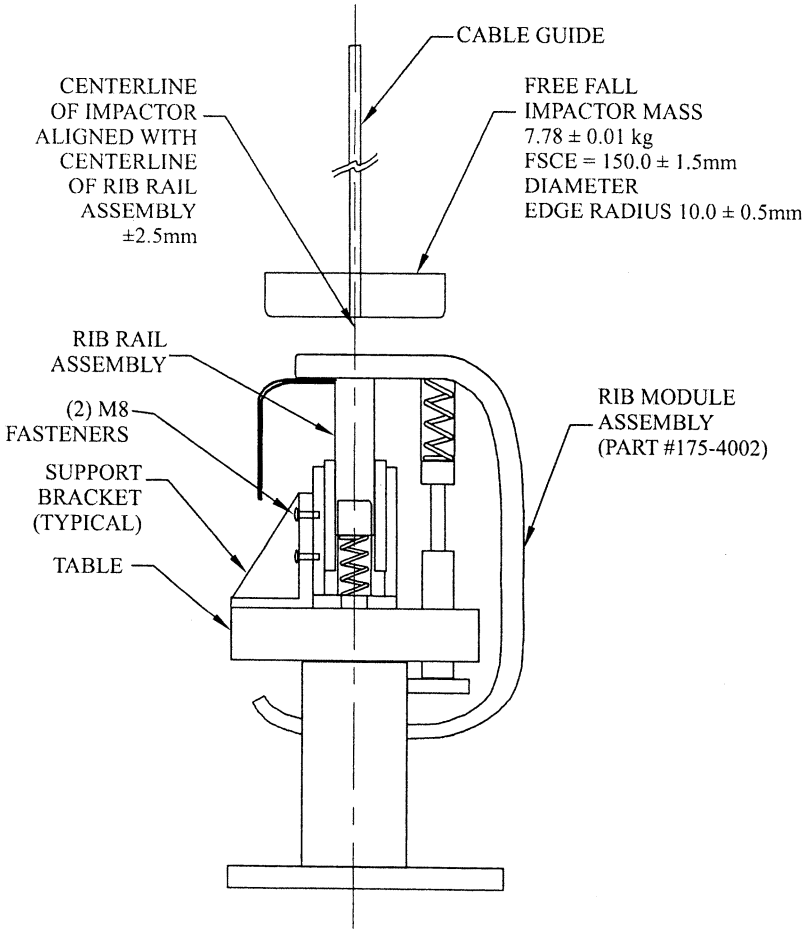

Issued: September 8, 2004.

Stephen R. Kratzke,

Associate Administrator for Rulemaking.

[FR Doc. 04–20715 Filed 9–14–04; 8:45 am]

BILLING CODE 4910–59–C

Notices

Federal Register

Vol. 69, No. 178

Wednesday, September 15, 2004

This section of the FEDERAL REGISTER contains documents other than rules or proposed rules that are applicable to the public. Notices of hearings and investigations, committee meetings, agency decisions and rulings, delegations of authority, filing of petitions and applications and agency statements of organization and functions are examples of documents appearing in this section.

AGENCY FOR INTERNATIONAL DEVELOPMENT

Notice of Public Information Collection Requirements Submitted to OMB for Review

SUMMARY: U.S. Agency for International Development (USAID) has submitted the following information collection to OMB for review and clearance under the Paperwork Reduction Act of 1995. Public Law 104–13. Comments regarding this information collection are best assured of having their full effect if received within 30 days of this notification. Comments should be sent via e-mail to *David_Rostker@omb.eop.gov* or fax to 202–395–7285. Copies of submission may be obtained by calling (202) 712–1365.

SUPPLEMENTARY INFORMATION:

OMB Number: OMB 0412–0035.

Form Number: AID 1550–2.

Title: Private and Voluntary Organization Annual Return.

Type of Submission: Renewal of Information Collection.

Purpose: USAID is required to collect information regarding the financial support of private and voluntary organizations registered with the Agency. The information is used to determine the eligibility of PVOs to receive USAID funding.

Annual Reporting Burden

Respondents: 459.

Total annual responses: 442.

Total annual hours requested: 1,320 hours.

Dated: September 9, 2004.

Joanne Paskar,

Chief Information and Records Division, Office of Administrative Services, Bureau for Management.

[FR Doc. 04–20732 Filed 9–14–04; 8:45 am]

BILLING CODE 6116–01–M

DEPARTMENT OF COMMERCE

Submission for OMB Review; Comment Request

DOC has submitted to the Office of Management and Budget (OMB) for clearance the following proposal for collection of information under the provisions of the Paperwork Reduction Act (44 U.S.C. chapter 35).

Agency: U.S. Census Bureau.

Title: 2004 Panel of the Survey of Income and Program Participation, Wave 4 Topical Modules.

Form Number(s): SIPP 24405(L) Director's Letter; SIPP/CAPI Automated Instrument; SIPP 24003 Reminder Card.

Agency Approval Number: 0607–0905.

Type of Request: Revision of a currently approved collection.

Burden: 148,028 hours.

Number of Respondents: 97,650.

Average Hours Per Response: 30 Minutes.

Needs and Uses: The U.S. Census Bureau requests authorization from the Office of Management and Budget (OMB) to conduct the Wave 4 topical module interview for the 2004 Panel of the Survey of Income and Program Participation (SIPP). We are also requesting approval for a few replacement questions in the reinterview instrument. The core SIPP and reinterview instruments were cleared under Authorization No. 0607–0905.

The SIPP is designed as a continuing series of national panels of interviewed households that are introduced every few years, with each panel having durations of 3 to 4 years. The 2004 Panel is scheduled for four years and will include twelve waves of interviewing. All household members 15 years old or over are interviewed a total of twelve times (twelve waves), at 4-month intervals, making the SIPP a longitudinal survey.

The survey is molded around a central ''core'' of labor force and income questions that remain fixed throughout the life of a panel. The core is supplemented with questions designed to answer specific needs. These supplemental questions are included with the core and are referred to as ''topical modules.'' The topical modules for the 2004 Panel Wave 4 are Work Schedule, Child Care, Annual Income and Retirement Accounts, and Taxes. These topical modules were previously conducted in the SIPP 2001 Panel Wave 4 instrument. Wave 4 interviews will be conducted from February through May 2005.

Data provided by the SIPP are being used by economic policymakers, the Congress, state and local governments, and Federal agencies that administer social welfare or transfer payment programs, such as the Department of Health and Human Services and the Department of Agriculture. The SIPP represents a source of information for a wide variety of topics and allows information for separate topics to be integrated to form a single and unified database so that the interaction between tax, transfer, and other government and private policies can be examined. Government domestic policy formulators depend heavily upon the SIPP information concerning the distribution of income received directly as money or indirectly as in-kind benefits and the effect of tax and transfer programs on this distribution. They also need improved and expanded data on the income and general economic and financial situation of the U.S. population. The SIPP has provided these kinds of data on a continuing basis since 1983, permitting levels of economic well-being and changes in these levels to be measured over time. Monetary incentives to encourage non-respondents to participate is planned for all waves of the 2004 SIPP Panel.

Affected Public: Individuals or households.

Frequency: Every 4 months.

Respondent's Obligation: Voluntary.

Legal Authority: Title 13 U.S.C., Section 182.

OMB Desk Officer: Susan Schechter, (202) 395–5103.

Copies of the above information collection proposal can be obtained by calling or writing Diana Hynek, Departmental Paperwork Clearance Officer, (202) 482–0266, Department of Commerce, Room 6625, 14th and Constitution Avenue, NW., Washington, DC 20230 (or via the Internet at *dhynek@doc.gov*).

Written comments and recommendations for the proposed information collection should be sent within 30 days of publication of this notice to Susan Schechter, OMB Desk Officer either by fax ((202) 395–7245) or e-mail (*susan_schechter@omb.eop.gov*).

Dated: September 10, 2004.

Madeleine Clayton,

Management Analyst, Office of the Chief Information Officer.

[FR Doc. 04–20775 Filed 9–14–04; 8:45 am]

BILLING CODE 3510–07–P

DEPARTMENT OF COMMERCE

Submission for OMB Review; Comment Request

DOC has submitted to the Office of Management and Budget (OMB) for clearance the following proposal for collection of information under the provisions of the Paperwork Reduction Act (44 U.S.C. chapter 35).

Agency: U.S. Census Bureau.

Title: 2004–2006 Annual Survey of Manufactures (ASM).

Form Number(s): MA–10000(L), MA–10000(S), MA10000(F1).

Agency Approval Number: 0607–0449.

Type of Request: Revision of a currently approved collection.

Burden: 186,200 hours.

Number of Respondents: 55,000.

Avg Hours Per Response: MA–10000(L)—3.58 hours, MA–10000(S)—1.38 hours, MA10000(F1)—1.2 minutes.

Needs and Uses: The Census Bureau requests a revision of the currently approved collection for the Annual Survey of Manufactures (ASM). The Census Bureau has conducted the ASM since 1949 to provide key measures of manufacturing activity during intercensal periods. In census years ending in ''2'' and ''7,'' we mail and collect the ASM as part of the Economic Census Covering the Manufacturing Sector. The content of the questionnaires for the 2004–06 ASM is identical to the 2003 ASM report form.

The ASM furnishes up-to-date estimates of employment and payrolls, hours and wages of production workers, value added by manufacture, cost of materials, value of shipments by class of product, inventories, and expenditures for new and used plant and equipment. The survey provides data for most of these items for all 5-digit and selected 6-digit industries as defined in the North American Industry Classification System (NAICS). We also provide geographic data by state at a more aggregated industry level.

The ASM statistics are based on a survey that includes both mail and nonmail components. Previously, the mail portion of the survey was comprised of a probability sample of approximately 55,000 manufacturing establishments from a frame of approximately 225,000 establishments. These 225,000 establishments were all manufacturing establishments of multiunit companies (companies with operations at more than one location) and all single-location manufacturing companies that were mailed in the 1997 Economic Census Covering the Manufacturing Sector. The nonmail component was comprised of the remaining small single-location companies; approximately 155,000 companies. No data have been collected from companies in the nonmail component. Rather, data have been directly obtained from the administrative records of the Internal Revenue Service (IRS), the Social Security Administration (SSA), and the Bureau of Labor Statistics (BLS). Although the nonmail companies account for over half of the population, they have accounted for less than 2 percent of the manufacturing output.

For the 2004–2006 cycles of the ASM we are considering changing the threshold we use for the nonmail component. We are studying the potential impact on the data of using administrative record data for a larger portion of the estimate. Based on the results of that work, we may increase the size of the nonmail component by up to as many as 75,000 establishments. The contribution of the nonmail component will expand to as much as 10 percent, but will be not less than 2 percent.

For the 2004–06 ASM, we will include an Ownership or Control flier in the mail out package of approximately 15,000 single-establishment firms in the ASM sample. This flier was used for the 2002 Economic Census, now we will use it for the ASM. In prior censuses and ASMs these questions were included as part of the questionnaires and used to determine if single-establishment firms were either owned or controlled by another company or if they operated at more than one location.

This survey is an integral part of the Government's statistical program. Its results provide a factual background for decision making by the executive and legislative branches of the Federal Government. Federal agencies use the annual survey's input and output data as benchmarks for their statistical programs, including the Federal Reserve Board's Index of Industrial Production and the Bureau of Economic Analysis' estimates of the gross domestic product (GDP). The data also provide the Department of Energy with primary information on the use of energy by the manufacturing sector to produce manufactured products. These data also are used as benchmark data for the Manufacturing Energy Consumption Survey (MECS), which is conducted for the Department of Energy by the Census Bureau. The Department of Commerce uses the exports of manufactured products data to measure the importance of exports to the manufacturing economy of each state. Within the Census Bureau, the ASM data are used to benchmark and reconcile monthly and quarterly data on manufacturing production and inventories. The ASM is the only source of complete establishment statistics for the programs mentioned above.

The survey also provides valuable information to private companies, research organizations, and trade associations. Industry makes extensive use of the annual figures on product class shipments at the U.S. level in its market analysis, product planning, and investment planning. State development/planning agencies rely on the survey as a major source of comprehensive economic data for policymaking, planning, and administration.

The Ownership or Control fliers will be used to update the Business Register, the basic sampling frame for many of our current surveys. Many of the establishments in the Census Bureau's Business Register are incorrectly identified as being single-establishment firms.

Affected Public: Business or other for-profit.

Frequency: Annually.

Respondent's Obligation: Mandatory.

Legal Authority: Title 13 U.S.C., Sections 182, 224, and 225.

OMB Desk Officer: Susan Schechter, (202) 395–5103.

Copies of the above information collection proposal can be obtained by calling or writing Diana Hynek, Departmental Paperwork Clearance Officer, (202) 482–0266, Department of Commerce, room 6625, 14th and Constitution Avenue, NW., Washington, DC 20230 (or via the Internet at *dhynek@doc.gov).* Written comments and recommendations for the proposed information collection should be sent within 30 days of publication of this notice to Susan Schechter, OMB Desk Officer either by fax (202–395–7245) or e-mail (*susan_schechter@omb.eop.gov*).

Dated: September 10, 2004.

Madeleine Clayton,

Management Analyst, Office of the Chief Information Officer.

[FR Doc. 04–20776 Filed 9–14–04; 8:45 am]

BILLING CODE 3510–07–P

DEPARTMENT OF COMMERCE

International Trade Administration

[A–427–801, A–428–801, A–475–801, A–588–804, A–559–801, A 412–801]

Antifriction Bearings and Parts Thereof From France, Germany, Italy, Japan, Singapore, and the United Kingdom: Final Results of Antidumping Duty Administrative Reviews, Rescission of Administrative Reviews in Part, and Determination To Revoke Order in Part

AGENCY: Import Administration, International Trade Administration, Department of Commerce.

SUMMARY: On February 9, 2004, the Department of Commerce published the preliminary results of the administrative reviews of the antidumping duty orders on ball bearings and parts thereof from France, Germany, Italy, Japan, Singapore and the United Kingdom and of the antidumping duty order on spherical plain bearings and parts thereof from France. The reviews cover 173 manufacturers/exporters. The period of review is May 1, 2002, through April 30, 2003.

Based on our analysis of the comments received, we have made changes, including corrections of certain programming and other clerical errors, in the margin calculations. Therefore, the final results differ from the preliminary results. The final weighted-average dumping margins for the reviewed firms are listed below in the section entitled ''Final Results of the Reviews.''

DATES: Effective September 15, 2004.

FOR FURTHER INFORMATION: The Department of Commerce (the Department) received numerous requests for reviews of companies under multiple orders. Please contact the appropriate analyst as outlined in the following chart at AD/CVD Enforcement, Office 5, Import Administration, International Trade Administration, U.S. Department of Commerce, Washington, DC 20230; telephone: (202) 482–4733.

Company	Country	Analyst
Ace Bearing and Transmission Co	France, Germany, Italy	Edythe Artman.
Acorn Industrial Service Limited	France, Germany, Italy	Jeffrey Frank.
Aeroengine Bearings U.K.	United Kingdom	Catherine Cartsos.
Aktif Endustrie Malzemeleri	France, Germany, Italy	Lyn Johnson.
Alphateam SPRL	France, Germany, Italy	Catherine Cartsos.
Asahi Seiko Co., Ltd.	Japan	Thomas Schauer.
Australian Bearing Pty Ltd.	France, Germany, Italy	Dmitry Vladimirov.
Baltic Bearing Supply	France, Germany, Italy	Yang Jin Chun.
Barden/FAG	United Kingdom	Jeffrey Frank.
Bearing and Tool GmbH	France, Germany, Italy	Catherine Cartsos.
Bearing Discount International GmbH	France, Germany, Italy	Fred Aziz.
Bearing Dynamics	France, Germany, Italy	Janis Kalnins.
Bearing Net	France, Germany, Italy	Susan Lehman.
Bearing Sales Corporation	France, Germany, Italy	Jeffrey Frank.
BTM Bearing Trade F.C. Miltner	France, Germany, Italy, United Kingdom	Hermes Pinilla.
Cantoni and C.S.N.C.	France, Germany, Italy	Susan Lehman.
CCVI Bearing Company	France, Germany, Italy	Kristin Case.
Comal SNC	France, Germany, Italy	Dmitry Vladimirov.
DCD Corporation	France, Germany, Italy	Dunyako Ahmadu.
EuroLatin Ex. Services	France, Germany, Italy	Susan Lehman.
Ever-on Corporation (formerly Taisho Kiko Co. Ltd.)	France, Germany, Italy	Kristin Case.
FAG Italia S.p.A.	Italy	Minoo Hatten.
Fair Friend Ent. Co. Ltd.	France, Germany, Italy	Kristin Case.
Friedrich Picard GmbH	France, Germany, Italy	Susan Lehman.
Frohlich and Dorken GmbH	France, Germany, Italy	Jeffrey Frank.
Han Sol Tech Corp./Yoo Shin Co.	France, Germany, Italy	Janis Kalnins.
Hayley Import/Export	France, Germany, Italy	Yang Jin Chun.
Heinz Knust	France, Germany, Italy	Catherine Cartsos.
Hergenhan GmbH	France, Germany, Italy	Catherine Cartsos.
Hoens Industrieel BV	France, Germany, Italy	Dmitry Vladimirov.
IBD Ltd.	France, Germany, Italy	Edythe Artman.
INA Schaeffer KG and FAG Kugelfischer Georg Schaefer AG (INA/FAG).	Germany	Susan Lehman/Dmitry Vladmirov.
International Bearing Pte. Ltd.	France, Germany, Italy	Susan Lehman.
Interspecies Donath GmbH	France, Germany, Italy	Lyn Johnson.
Italcuscinetti Group	France, Germany, Italy	Dunyako Ahmadu.
Kian Ho Bearings, Ltd.	France, Germany, Italy	Edythe Artman.
KIS Antriebs Technik GmbH	France, Germany, Italy	Dunyako Ahmadu.
Koyo Seiko Co., Ltd.	Japan	Tom Schauer.
KSM, Minamiguchi/Bearing MFG. Co	France, Germany, Italy	Lyn Johnson.
LTM Industrietechnik	France, Germany, Italy	Dmitry Vladimirov.
M. Buchhalter Maschenmode/Hergenhan	France, Germany, Italy	Yang Jin Chun.
Micaknowledge	France, Germany, Italy	Catherine Cartsos.
Minetti SpA	France, Germany, Italy	Fred Aziz.
Ming Hing Trading Company	France, Germany, Italy	Janis Kalnins.
Motion Bearing Pte. Ltd.	France, Germany, Italy	Susan Lehman.
Nankai Seiko	Japan	Catherine Cartsos.
NMB/Pelmec	Singapore	Yang Jin Chun.
Nippon Pillow Block Sales (NPBS)	Japan	Yang Jin Chun.
NSK Ltd. (NSK)	Japan	Dunyako Ahmadu.
NTN Corp. (NTN)	Japan	Hermes Pinilla.
Osaka Pump Co. Ltd.	Japan	Edythe Artman.
Paul Mueller	Germany	Dave Dirstine.

Company	Country	Analyst
Ringball Corporation	France, Germany, Italy	Dave Dirstine.
Rodamietos Rovi	France, Germany, Italy	Jeffrey Frank.
Roeirasa	France, Germany, Italy	Susan Lehman.
Rolling Bearing Co. Pty. Ltd.	France, Germany, Italy	Kristin Case.
Rovi-Marcay	France, Germany, Italy	Tom Schauer.
Rovi-Valencia	France, Germany, Italy	Minoo Hatten.
Sapporo Precision Bearings, Inc. (Sapporo)	Japan	Jeffrey Frank.
SKF France S.A. and Sarma	France	Dunyako Ahmadu.
SKF GmbH	Germany	Kristin Case.
SKF Industrie S.p.A.	Italy	Dunyako Ahmadu.
SKF (U.K.) Ltd.	United Kingdom	Kristin Case.
SNR Roulements	France	Fred Aziz.
Sprint Engineering	France, Germany, Italy	Susan Lehman.
Takeshita Seiko Co. Ltd.	Japan	Janis Kalnins.
Taninaka Ltd.	France, Germany, Italy	Susan Lehman.
Timken	Germany	Kristin Case.
Top G Trading Pte Ltd.	France, Germany, Italy	Catherine Cartsos.
Weber Kugellager International	France, Germany, Italy	Fred Aziz.
Withus Technology Corp.	France, Germany, Italy	Janis Kalnins.
Wyko Export	France, Germany, Italy	Yang Jin Chun.

SUPPLEMENTARY INFORMATION:

Background

On February 9, 2004, the Department published the preliminary results of the administrative reviews of the antidumping duty orders on antifriction bearings and parts thereof (antifriction bearings) from France, Germany, Italy, Japan, Singapore, and the United Kingdom (69 FR 5949) (*Preliminary Results for France, et al.*). The period of review (POR) is May 1, 2002, through April 30, 2003. We invited interested parties to comment on the preliminary results. At the request of certain parties, we held hearings for Japan-specific issues on May 21, 2004, and for general issues on June 25, 2004. On May 3, 2004, and August 12, 2004, the Department published notices extending the date for issuing the final results of these reviews. *See Antifriction Bearings and Parts Thereof From France, Germany, Italy, Japan, Singapore, and the United Kingdom: Extension of Time Limit for Final Results of Antidumping Duty Administrative Reviews*, 69 FR 24121 and 69 FR 49861, respectively. The Department has conducted these administrative reviews in accordance with section 751 of the Tariff Act of 1930, as amended (the Act).

Scope of Reviews

The products covered by these reviews are antifriction bearings (other than tapered roller bearings) and parts thereof (AFBs) and constitute the following merchandise:

1. *Ball Bearings and Parts Thereof:* These products include all AFBs that employ balls as the rolling element. Imports of these products are classified under the following categories: Antifriction balls, ball bearings with integral shafts, ball bearings (including radial ball bearings) and parts thereof, and housed or mounted ball bearing units and parts thereof.

Imports of these products are classified under the following *Harmonized Tariff Schedules* (HTSUS) subheadings: 3926.90.45, 4016.93.00, 4016.93.10, 4016.93.50, 6909.19.5010, 8431.20.00, 8431.39.0010, 8482.10.10, 8482.10.50, 8482.80.00, 8482.91.00, 8482.99.05, 8482.99.2580, 8482.99.35, 8482.99.6595, 8483.20.40, 8483.20.80, 8483.50.8040, 8483.50.90, 8483.90.20, 8483.90.30, 8483.90.70, 8708.50.50, 8708.60.50, 8708.60.80, 8708.70.6060, 8708.70.8050, 8708.93.30, 8708.93.5000, 8708.93.6000, 8708.93.75, 8708.99.06, 8708.99.31, 8708.99.4960, 8708.99.50, 8708.99.5800, 8708.99.8080, 8803.10.00, 8803.20.00, 8803.30.00, 8803.90.30, and 8803.90.90.

2. *Spherical Plain Bearings, Mounted and Unmounted, and Parts Thereof:* These products include all spherical plain bearings that employ a spherically-shaped sliding element and include spherical plain rod ends.

Imports of these products are classified under the following HTS subheadings: 3926.90.45, 4016.93.00, 4016.93.10, 4016.93.50, 6909.50.10, 8483.30.80, 8483.90.30, 8485.90.00, 8708.93.5000, 8708.99.50, 8803.10.00, 8803.20.00, 8803.30.00, 8803.90.30, and 8803.90.90.

Although the HTSUS item numbers above are provided for convenience and customs purposes, written descriptions of the scope of these proceedings remain dispositive.

The size or precision grade of a bearing does not influence whether the bearing is covered by one of the orders. These orders cover all the subject bearings and parts thereof (inner race, outer race, cage, rollers, balls, seals, shields, etc.) outlined above with certain limitations. With regard to finished parts, all such parts are included in the scope of the these orders. For unfinished parts, such parts are included if (1) they have been heat-treated, or (2) heat treatment is not required to be performed on the part. Thus, the only unfinished parts that are not covered by these orders are those that will be subject to heat treatment after importation. The ultimate application of a bearing also does not influence whether the bearing is covered by the orders. Bearings designed for highly specialized applications are not excluded. Any of the subject bearings, regardless of whether they may ultimately be utilized in aircraft, automobiles, or other equipment, are within the scope of these orders.

For a listing of scope determinations which pertain to the orders, see the Memorandum from the Antifriction Bearings Team to Laurie Parkhill regarding the placement of scope information from the 2001–02 administrative review record on the record of these administrative reviews, dated January 14, 2004. This memorandum is on file in the Central Records Unit (CRU), Main Commerce Building, Room B–099, in the General Issues record (A–100–001) for the 02/03 reviews.

Analysis of the Comments Received

All issues raised in the case and rebuttal briefs by parties to the concurrent administrative reviews of the orders on antifriction bearings are addressed in the ''Issues and Decision Memorandum'' (Decision Memo) from Jeffrey May, Deputy Assistant Secretary,

to James Jochum, Assistant Secretary, dated September 8, 2004, which is hereby adopted by this notice. A list of the issues which parties have raised and to which we have responded, all of which are in the Decision Memo, is attached to this notice as an Appendix. This Decision Memo, which is a public document, is on file in the Central Records Unit (CRU), Main Commerce Building, Room B–099, and is accessible on the Web at *http://ia.ita.doc.gov/frn/index.html*. The paper copy and electronic version of the Decision Memo are identical in content.

Sales Below Cost in the Home Market

The Department disregarded home-market sales that failed the cost-of-production test for the following firms for these final results of reviews:

Country	Company	Class or kind of merchandise
France	SKF	Ball.
Germany	SKF, Paul Mueller, and INA/FAG	Ball.
Italy	FAG, SKF	Ball.
Japan	Asahi Seiko, Koyo, NSK, NPBS, and NTN	Ball.
Singapore	NMB/Pelmec	Ball.
United Kingdom	Barden	Ball.

Use of Adverse Facts Available

Section 776(b) of the Act provides that, if the Department finds that an interested party ''has failed to cooperate by not acting to the best of its ability to comply with a request for information,'' the Department may use information that is adverse to the interests of that party as facts otherwise available.

Section 776(b) of the Act further provides that the Department may use as adverse facts available information derived from the petition, a final determination in an antidumping investigation, any previous review, or any other information placed on the record. The statute does not provide a clear obligation or preference for relying on a particular source in choosing information to use as adverse facts available, but the Department may use as facts available a final determination in a less-than-fair-value proceeding even if the less-than-fair-value determination is based on the best information available. *See Certain Cut-to-Length Carbon Steel Plate from Sweden: Final Results of Administrative Review*, 62 FR 18396, 18402 (April 15, 1997), and *Certain Cut-to-Length Carbon Steel Plate from Mexico: Preliminary Results of Antidumping Duty Administrative Review*, 63 FR 48181, 48183 (September 9, 1998).

In the *Preliminary Results for France, et al.*, we determined that the use of facts available as the basis for the weighted-average dumping margin was appropriate for the following companies:

Ace Bearing and Tool (France, Germany, and Italy)
Acorn Industrial Services Limited (Germany)
Aeroengine Bearings (United Kingdom)
Aktif Endustrie (France, Germany, and Italy)
Alphateam SPRL (France, Germany, and Italy)
Australian Bearing Pty Ltd. (France, Germany, and Italy)
Baltic Bearing Supply (France, Germany, and Italy)
Bearing Dynamics (France, Germany, and Italy)
Bearing Sales Corp. (France, Germany, and Italy)
Bearing and Tool GmbH (France, Germany, and Italy)
Budapesti Sved Csapagy Ltd. (France, Germany, and Italy)
Cantoni and C.S.N.C (France, Germany, and Italy)
CCVI Bearing Co. (France, Germany, and Italy)
DCD Corporation (France, Germany, and Italy)
Delta Export (France, Germany, and Italy)
EuroLatin Services (France, Germany, and Italy)
Fair Friend Ent. Co. Ltd. (France, Germany, and Italy)
Friedrich Picard GmbH (France, Germany, and Italy)
Frohlich and Dorken GmbH (France, Germany, and Italy)
Han Sol Technology Corporation (France, Germany, and Italy)
Hayley Import and Export (France, Germany, and Italy)
Heinz Knust (France, Germany, and Italy)
Hergenhan GmbH (France, Germany, and Italy)
Hoens Industrieel BV (France, Germany, and Italy)
IBD Ltd. (France, Germany, and Italy)
International Bearing Pte. Ltd. (France, Germany, and Italy)
Italcuscinetti Group (France, Germany, and Italy)
Kian Ho Bearings (France, Germany, and Italy)
KIS Antriebs Technik GmbH (France, Germany, and Italy)
KSM Minamiguchi/Bearing Manufacturing Co. (France, Germany, and Italy)
LTM Industrietechnik (France, Germany, and Italy)
M. Buchhalter Maschenmode/Hergenhan (France, Germany, and Italy)
Micaknowledge (France, Germany, and Italy)
Minetti SPA (France, Germany, and Italy)
Ming Hing Trading Co. (France, Germany, and Italy)
Motion Bearing Pte. Ltd. (France, Germany, and Italy)
Rodamietos Rovi (France, Germany, and Italy)
Roeirasa (France, Germany, and Italy)
Rovi-Marcay (France, Germany, and Italy)
Rovi-Valencia (France, Germany, and Italy)
Taninaka Ltd. (France, Germany, and Italy)
Top G Trading Company (France, Germany, and Italy)
Withus Technology Corporation (France, Germany, and Italy)
Wyko Export (France, Germany, and Italy)

These companies did not submit adequate responses to our antidumping duty questionnaire.[1] Consequently, we found that they withheld ''information that has been requested by the administering authority'' under section 776(a)(2) of the Act.

In addition to the above firms, Weber Kugellager International (Weber) did not provide information that was essential for the Department to calculate antidumping margins for the firm (see Section 3 of the concurrent Issues and Decision Memorandum to this notice). Although Weber received a neutral facts available rate in the *Preliminary Results for France, et al.* (69 FR 5952), the company's failure to provide this information resulted in our use of adverse facts available in these final results of reviews. We also rejected a submission made by Weber on August 3, 2004, as being untimely within the deadlines established by our regulations. See 19 CFR 351.302(d).

In accordance with section 776(b) of the Act, we made an adverse inference in our application of the facts available. This is appropriate because the

[1] See memoranda from analysts to the file, ''Administrative Review of the Antidumping Duty Order on Antifriction Bearings and Parts Thereof from Germany—Responses to Questionnaire (December 11, 2003), Administrative Review of the Antidumping Duty Order on Antifriction Bearings and Parts Thereof from Italy—Responses to Questionnaire (December 11, 2003), and Administrative Review of the Antidumping Duty Order on Antifriction Bearings and Parts Thereof from France—Responses to Questionnaire (December 11, 2003).''

companies identified above did not provide appropriate responses to our requests for information and, even following the issuance of our preliminary results, did not provide any acceptable rationale for their non-responses. Therefore, we found and continue to find that they have not acted to the best of their ability in providing us with relevant information which is under their control. As adverse facts available for these firms, we have applied the highest rate which we have calculated for any company in any segment of the relevant proceeding on ball bearings from the countries for which these firms have been reviewed. We have selected these rates because they are sufficiently high as to reasonably assure that these firms do not obtain a more favorable result by failing to cooperate. Specifically, the rates are as follows: 66.42 percent for France, 70.41 percent for Germany, 68.29 percent for Italy, and 61.14 percent for the United Kingdom.

Section 776(c) of the Act provides that the Department shall, to the extent practicable, corroborate secondary information used for facts available by reviewing independent sources reasonably at its disposal. Information from a prior segment of the proceeding or from another company in the same proceeding constitutes secondary information. The Statement of Administrative Action accompanying the Uruguay Round Agreements Act, H.R. Doc. 103–316, at 870 (1994) (SAA), provides that the word ''corroborate'' means that the Department will satisfy itself that the secondary information to be used has probative value. As explained in *Tapered Roller Bearings and Parts Thereof, Finished and Unfinished, from Japan, and Tapered Roller Bearings Four Inches or Less in Outside Diameter, and Components Thereof, from Japan: Preliminary Results of Antidumping Duty Administrative Reviews and Partial Termination of Administrative Reviews*, 61 FR 57391, 57392 (November 6, 1996) *(Tapered Roller Bearings and Parts Thereof from Japan)*, in order to corroborate secondary information, the Department will examine, to the extent practicable, the reliability and relevance of the information used. Unlike other types of information, however, such as input costs or selling expenses, there are no independent sources for calculated dumping margins. The only source for margins is administrative determinations. Thus, with respect to an administrative review, if the Department chooses as facts available a calculated dumping margin from a prior segment of the proceeding, it is not necessary to question the reliability of the margin for that time period.

With respect to the relevance aspect of corroboration, however, the Department will consider information reasonably at its disposal as to whether there are circumstances that would render a margin not relevant. Where circumstances indicate that the selected margin is not appropriate as adverse facts available, the Department will disregard the margin and determine an appropriate margin. See *Fresh Cut Flowers from Mexico; Final Results of Antidumping Duty Administrative Review*, 61 FR 6812, 6814 (February 22, 1996), where the Department disregarded the highest dumping margin as best information available because the margin was based on another company's uncharacteristic business expense resulting in an unusually high margin. Further, in accordance with *F.LII De Cecco Di Filippo Fara S. Martino S.p.A.* v. *United States*, 216 F.3d 1027 (CAFC June 16, 2000), we also examine whether information on the record would support the selected rates as reasonable facts available.

We find that the rates which we are using for these final results have probative value. We compared the selected margins to margins calculated on individual sales of the merchandise in question made by the French, German, Italian, and U.K. companies covered by the instant review. We found that a number of sales in commercial quantities had dumping margins near or exceeding the rates under consideration. The details of this analysis are contained in the memoranda from the case analysts to Mark Ross or Laurie Parkhill.[2] This evidence supports an inference that the selected rates reflect the actual dumping margins for the firms in question.

These rates are the current cash-deposit rates for a number of firms (*e.g.*, in the Germany proceeding, 70.41 percent is the current deposit rate for, among other firms, Timken (formerly Torrington Nadellager), NTN, Bearings Discount International GmbH, Motion Bearings, and Alphateam SPRL). Furthermore, there is no information on the record that demonstrates that the rates we have selected are inappropriate for use as the total adverse facts-available rates for the companies in question. Therefore, we consider the selected rates to have probative value with respect to the firms in question in these reviews and to reflect the appropriate adverse inferences.

Other Changes Since the Preliminary Results

Based on our analysis of comments received, we have made revisions that have changed the results for certain firms. We have corrected programming and clerical errors in the preliminary results, where applicable. Any alleged programming or clerical errors about which we or the parties do not agree are discussed in section 10 of the Decision Memo.

Rescission of the Review in Part

In the *Preliminary Results for France, et al.*, we stated our intent to rescind the administrative reviews of bearings that were exported by Comal SNC (France, Germany, Italy), Interspecies Donath GmbH (France, Germany, Italy), and BTM Bearing Trade F.C. Miltner (BTM) (France, Germany, Italy and the United Kingdom). Comal SNC and Interspecies Donath GmbH were unlocatable and BTM was not the proper party to review because it was a reseller and all of its suppliers had knowledge at the time of sale that the merchandise was destined for the United States. See 69 FR at 5951. Since the status of these firms remains unchanged and we have received no additional information or argument as to our treatment of these companies, we hereby rescind the reviews with respect to these companies in these final results.

In the preliminary results of the reviews, we also indicated that, for certain companies that reported no shipments of merchandise subject to those reviews, we intended to rescind these reviews at the time of our final results if we continued to find no evidence of sales during the period of review (69 FR 5959 at footnote 1). However, as we indicated in *Antifriction Bearings (Other than Tapered Roller Bearings) and Parts Thereof from France, Germany, Italy, Japan, Sweden, and the United Kingdom; Final Results of Antidumping Duty Administrative Reviews and Revocation of Orders in Part*, 66 FR 36551, 36554 (July 12, 2001), and in *Ball Bearings and Parts Thereof from France, Germany, Italy, Japan, and the United*

[2] See the memorandum entitled *The Use of Adverse Facts Available and Corroboration of Secondary Information for Italy* (September 8, 2004), *The Use of Facts Available and Corroboration of Secondary Information for France* (February 2, 2004), and *The Use of Adverse Facts Available and Corroboration of Secondary Information for Germany* (September 8, 2004). Also, see the memorandum on the United Kingdom review record entitled *The Use of Facts Available and Corroboration of Secondary Information for Aeroengine Bearings* (September 8, 2004), and the memoranda on the review records for France, Germany, and the United Kingdom entitled *The Use of Adverse Facts Available and Corroboration of Secondary Information for Weber Kugellager International* (September 8, 2004) (collectively, Corroboration Memoranda).

Kingdom; Final Results of Antidumping Duty Administrative Reviews, 67 FR 55780, 55781 (August 30, 2002), since it is impossible to establish with certainty from U.S. Customs and Border Protection (CBP) data the accuracy of their statements, we will instruct CBP at the time of liquidation to review all documentation for suspended entries of subject merchandise. If CBP finds that any of the ''no-shipment'' respondents, in fact, had shipments of subject merchandise during the POR, we will instruct CBP to apply a facts-available rate to such respondents based on the adverse facts-available rate we have determined for the applicable country of origin and subject merchandise and we are not rescinding the reviews for the respondents in question.

Revocation of Order in Part

In the *Preliminary Results for France, et al.*, we stated our intent to revoke the order on ball bearings from Germany in part with respect to Paul Mueller. See 69 FR at 5953–54. We find that, for Paul Mueller, the regulatory requirement for revocation has been satisfied. See 19 CFR 351.222(d)(1). We have received no information or argumentation since the *Preliminary Results for France, et al.* which would cause us to change this determination. Accordingly, we revoke the order in part with respect to all subject merchandise manufactured and exported by Paul Mueller in these final results of review. See the Analysis Memorandum for the Preliminary Results of Review for Paul Mueller, dated February 2, 2004.

Final Results of the Reviews

We determine that the following percentage weighted-average margins on ball bearings exist for the period of May 1, 2002, through April 30, 2003:

Company	Margin
FRANCE—Ball Bearings	
Ace Bearing and Transmission Service	66.42
Aktif Endustrie Malzemeleri	66.42
Alphateam SPRL	66.42
Australian Bearing Pty Ltd	66.42
Baltic Bearing Supply	66.42
Bearing and Tool GmbH	66.42
Bearing Dynamics	66.42
Bearing Sales Corp	66.42
Budapesti Sved Csapagy Ltd	66.42
Cantoni and C.S.N.C	66.42
CCVI Bearing Co	66.42
DCD Corp	66.42
Delta Export GmbH	66.42
EuroLatin Ex. Services	66.42
Fair Friend Ent. Co. Ltd	66.42
Friedrich Picard GmbH	66.42
Frohlich and Dorken GmbH	66.42
Han Sol Tech. Corp/Yoo Shin Co	66.42
Hayley Import/Export	66.42
Heinz Knust	66.42
Hergenhan GmbH	66.42
Hoens Industrieel BV	66.42
IBD Ltd	66.42
International Bearing Pte. Ltd	66.42
Italcuscinetti Group	66.42
Kian Ho Bearings, Ltd	66.42
KIS Antriebs Technik GmbH	66.42
KSM, Minamiguchi/Bearing Manufacturing Co	66.42
LTM Industrietechnik	66.42
M. Buchhalter Maschenmode/Hergenhan	66.42
Micaknowledge	66.42
Minetti SpA	66.42
Ming Hing Trading Co	66.42
Motion Bearing Pte. Ltd	66.42
Ringball Corporation	2.94
Rodamietos Rovi	66.42
Roeirasa	66.42
Rovi-Marcay	66.42
Rovi-Valencia	66.42
SKF France S.A. and Sarma	5.25
SNR Roulements	6.40
Taninaka Ltd	66.42
Top G Trading Pte Ltd	66.42
Weber Kugellager Int	66.42
Withus Technology Corporation	66.42
Wyko Export	66.42
FRANCE—Spherical Plain Bearings	
SKF France S.A. and Sarma	22.72
GERMANY—Ball Bearings	
Ace Bearing and Transmission Service	70.41

Company	Margin
Acorn Industrial Services Limited	70.41
Aktif Endustrie Malzemeleri	70.41
Alphateam SPRL	70.41
Australian Bearing Pty Ltd	70.41
Baltic Bearing Supply	70.41
Bearing and Tool GmbH	70.41
Bearing Dynamics	70.41
Bearing Sales Corp	70.41
Budapesti Sved Csapagy Ltd	70.41
Cantoni and C.S.N.C	70.41
CCVI Bearing Co	70.41
DCD Corp	70.41
Delta Export GmbH	70.41
EuroLatin Ex. Services	70.41
Fair Friend Ent. Co. Ltd	70.41
Friedrich Picard GmbH	70.41
Frohlich and Dorken GmbH	70.41
Han Sol Tech. Corp/Yoo Shin Co	70.41
Hayley Import/Export	70.41
Heinz Knust	70.41
Hergenhan GmbH	70.41
Hoens Industrieel BV	70.41
IBD Ltd	70.41
INA/FAG	5.59
International Bearing Pte. Ltd	70.41
Italcuscinetti Group	70.41
Kian Ho Bearings, Ltd	70.41
KIS Antriebs Technik GmbH	70.41
KSM, Minamiguchi/Bearing Manufacturing Co	70.41
LTM Industrietechnik	70.41
M. Buchhalter Maschenmode/Hergenhan	70.41
Micaknowledge	70.41
Minetti SpA	70.41
Ming Hing Trading Co	70.41
Motion Bearing Pte Ltd.	70.41
Paul Mueller	0.36
Ringball	6.54
Rodamietos Rovi	70.41
Roeirasa	70.41
Rovi-Marcay	70.41
Rovi-Valencia	70.41
SKF GmbH	2.49
Taninaka Ltd	70.41
Top G Trading Pte Ltd	70.41
Weber Kugellager Int	70.41
Withus Technology Corporation	70.41
Wyko Export	70.41
ITALY—Ball Bearings	
Ace Bearing and Transmission Service	68.29
Aktif Endustrie Malzemeleri	68.29
Alphateam SPRL	68.29
Australian Bearing Pty Ltd	68.29
Baltic Bearing Supply	68.29
Bearing and Tool GmbH	68.29
Bearing Dynamics	68.29
Bearing Sales Corp	68.29
Budapesti Sved Csapagy Ltd	68.29
Cantoni and C.S.N.C	68.29
CCVI Bearing Co	68.29
DCD Corp	68.29
Delta Export GmbH	68.29
EuroLatin Ex. Services	68.29
FAG Italia S.p.A	4.79
Fair Friend Ent. Co. Ltd	68.29
Friedrich Picard GmbH	68.29
Frohlich and Dorken GmbH	68.29
Han Sol Tech. Corp/Yoo Shin Co	68.29
Hayley Import/Export	68.29
Heinz Knust	68.29
Hergenhan GmbH	68.29
Hoens Industrieel BV	68.29
IBD Ltd	68.29

Company	Margin
International Bearing Pte. Ltd	68.29
Italcuscinetti Group	68.29
Kian Ho Bearings, Ltd	68.29
KIS Antriebs Technik GmbH	68.29
KSM, Minamiguchi/Bearing Manufacturing Co	68.29
LTM Industrietechnik	68.29
M. Buchhalter Maschenmode/Hergenhan	68.29
Micaknowledge	68.29
Minetti SpA	68.29
Ming Hing Trading Co	68.29
Motion Bearing Pte. Ltd	68.29
Ringball	3.45
Rodamietos Rovi	68.29
Roeirasa	68.29
Rovi-Marcay	68.29
Rovi-Valencia	68.29
SKF Industrie S.p.A	1.38
Taninaka Ltd	68.29
Top G Trading Pte Ltd	68.29
Weber Kugellager Int	68.29
Withus Technology Corporation	68.29
Wyko Export	68.29
JAPAN—Ball Bearings	
Asahi Seiko Co. Ltd	0.23
Koyo Seiko Co., Ltd	5.56
Nankai Seiko	0.46
Nippon Pillow Block Sales	3.37
NSK Ltd	2.46
NTN Corp	2.74
Osaka Pump	1.78
Sapporo Precision	8.74
Takeshita Seiko	2.90
SINGAPORE—Ball Bearings	
NMB/Pelmec	1.94
UNITED KINGDOM—Ball Bearings	
Aeroengine Bearings	61.14
Barden/FAG	4.10

Assessment Rates

The Department will determine and CBP shall assess, antidumping duties on all appropriate entries. We will issue appropriate assessment instructions directly to CBP within 15 days of publication of these final results of reviews. In accordance with 19 CFR 351.212(b)(1), we have calculated, whenever possible, an exporter/importer-specific assessment rate or value for subject merchandise.

With respect to the companies which did not respond to our questionnaire for these reviews, the Department will instruct CBP to liquidate all imports of subject merchandise for which the non-responsive companies acted in any aspect of the transaction at the applicable adverse-facts-available rate for each country unless the manufacturer of the subject merchandise listed that non-responsive company as an EP customer.

The Department clarified its ''automatic assessment'' regulation on May 6, 2003 (68 FR 23954). This clarification will apply to entries of subject merchandise during the period of review produced by companies included in these final results of reviews for which the reviewed companies did not know their merchandise was destined for the United States. In such instances, we will instruct CBP to liquidate unreviewed entries at the all-others rate if there is no rate for the intermediate company(ies) involved in the transaction. For a full discussion of this clarification, *see Notice of Policy Concerning Assessment of Antidumping Duties*, 68 FR 23954 (May 6, 2003).

a. Export Price

With respect to export-price (EP) sales, we divided the total dumping margins (calculated as the difference between normal value and the EP) for each exporter's importer/customer by the total number of units the exporter sold to that importer/customer. We will direct CBP to assess the resulting per-unit dollar amount against each unit of merchandise on each of that importer's/customer's entries under the relevant order during the review period.

b. Constructed Export Price

For constructed export-price (CEP) sales (sampled and non-sampled), we divided the total dumping margins for the reviewed sales by the total entered value of those reviewed sales for each importer. We will direct CBP to assess the resulting percentage margin against the entered customs values for the subject merchandise on each of that importer's entries under the relevant order during the review period. See 19 CFR 351.212(b)(1).

Cash-Deposit Requirements

To calculate the cash-deposit rate for each respondent (*i.e.*, each exporter and/or manufacturer included in these reviews), we divided the total dumping margins for each company by the total net value of that company's sales of merchandise during the review period subject to each order.

To derive a single deposit rate for each respondent, we weight-averaged the EP and CEP deposit rates (using the EP and CEP, respectively, as the weighting factors). To accomplish this when we sampled CEP sales, we first calculated the total dumping margins for all CEP sales during the review period by multiplying the sample CEP margins by the ratio of total days in the review period to days in the sample weeks. We then calculated a total net value for all CEP sales during the review period by multiplying the sample CEP total net value by the same ratio. Finally, we divided the combined total dumping margins for both EP and CEP sales by the combined total value for both EP and CEP sales to obtain the deposit rate.

We will direct CBP to collect the resulting percentage deposit rate against the entered customs value of each of the exporter's entries of subject merchandise entered, or withdrawn from warehouse, for consumption on or after the date of publication of this notice. Entries of parts incorporated into finished bearings before sales to an unaffiliated customer in the United States will receive the respondent's deposit rate applicable to the order.

Furthermore, the following deposit requirements will be effective upon publication of this notice of final results of administrative reviews for all shipments of the subject merchandise entered, or withdrawn from warehouse, for consumption on or after the date of publication, as provided by section 751(a)(1) of the Act: (1) The cash-deposit rates for the reviewed companies will be the rates shown above except that, for firms whose weighted-average margins are less than 0.5 percent and, therefore, *de minimis*, the Department will not require a deposit of estimated antidumping duties; (2) for previously reviewed or investigated companies not listed above, the cash-deposit rate will continue to be the company-specific rate published for the most recent period; (3) if the exporter is not a firm covered in this review, a prior review, or the original less-than-fair-value (LTFV) investigation but the manufacturer is, the cash-deposit rate will be the rate established for the most recent period for the manufacturer of the merchandise; (4) the cash-deposit rate for all other manufacturers or exporters will continue to be the ''All Others'' rate for the relevant order made effective by the final results of review published on July 26, 1993. *See Antifriction Bearings (Other Than Tapered Roller Bearings) and Parts Thereof From France, et al: Final Results of Antidumping Duty Administrative Reviews and Revocation in Part of an Antidumping Duty Order*, 58 FR 39729 (July 26, 1993). For ball bearings from Italy, *see Antifriction Bearings (Other Than Tapered Roller Bearings) and Parts Thereof From France, et al; Final Results of Antidumping Duty Administrative Reviews, Partial Termination of Administrative Reviews, and Revocation in Part of Antidumping Duty Orders*, 61 FR 66472, 66521 (December 17, 1996). These rates are the ''All Others'' rates from the relevant LTFV investigation.

These deposit requirements shall remain in effect until publication of the final results of the next administrative reviews.

This notice serves as a reminder to importers of their responsibility under 19 CFR 351.402(f) to file a certificate regarding the reimbursement of antidumping duties prior to liquidation of the relevant entries during these review periods. Failure to comply with this requirement could result in the Department's presumption that reimbursement of antidumping duties occurred and the subsequent assessment of doubled antidumping duties.

This notice also serves as a reminder to parties subject to administrative protective order (APO) of their responsibility concerning the disposition of proprietary information disclosed under APO in accordance with 19 CFR 351.305(a)(3). Timely notification of the return or destruction of APO materials or conversion to judicial protective order is hereby requested. Failure to comply with the regulations and the terms of an APO are sanctionable violations. We are issuing and publishing these determinations in accordance with sections 751(a)(1) and 777(i) of the Act.

Dated: September 8, 2004.

James J. Jochum,

Assistant Secretary for Import Administration.

Appendix

Comments and Responses

1. Offsetting Margins with Above-Normal-Value Transactions
2. Model-Match Methodology
3. Adverse Facts Available
4. Indirect Selling Expenses
5. Allocation Methodology
6. Movement Expenses
7. Sample Sales
8. Billing Adjustments and Rebates
9. Cost Issues
10. Clerical Errors
11. Miscellaneous Issues
    - A. Performance Lubricant
    - B. HM Sales Reporting by NPBS
    - C. Sales Outside the Ordinary Course of Trade
    - D. Home-Market Interest Rate
    - E. Home-Market Commissions

[FR Doc. E4–2195 Filed 9–14–04; 8:45 am]

BILLING CODE 3510–DS–P

DEPARTMENT OF COMMERCE

International Trade Administration

[A–570–803]

Heavy Forged Hand Tools, Finished or Unfinished, With or Without Handles, From the People's Republic of China: Final Results of Antidumping Duty Administrative Reviews, Final Partial Rescission of Antidumping Duty Administrative Reviews, and Determination Not To Revoke in Part

AGENCY: Import Administration, International Trade Administration, Department of Commerce.

ACTION: Notice of final results of antidumping duty administrative reviews.

SUMMARY: On March 10, 2004, the Department of Commerce (the Department) published the preliminary results of the administrative reviews of the antidumping duty orders on heavy forged hand tools (HFHTs) from the People's Republic of China (PRC). These reviews cover HFHTs exported to the United States by multiple PRC manufacturers/exporters during the period February 1, 2002 through January 31, 2003. We provided interested parties with an opportunity to comment on the preliminary results of review. After analyzing the comments received, we made two changes in the margin calculations: (1) We are no longer applying total adverse facts available (AFA) to sales of products covered by the bars/wedges order made by Shandong Machinery Import & Export Corporation (SMC) and are instead calculating a margin using the reported sales and factors of production (FOP) data, and (2) we have applied partial AFA to SMC for its failure to report a FOP for finish coating. The final weighted-average dumping margins for the reviewed firms are listed below in the section entitled ''Final Results of Review.'' We will instruct U.S. Customs and Border Protection (CBP) to assess

antidumping duties on all appropriate entries.

DATES: Effective September 15, 2004.

FOR FURTHER INFORMATION CONTACT: Thomas Martin or Mark Manning, Office of AD/CVD Enforcement, Office 4, Import Administration, International Trade Administration, U.S. Department of Commerce, 14th Street and Constitution Avenue, NW., Washington, DC 20230; telephone: (202) 482–3936 and (202) 482–5253, respectively.

SUPPLEMENTARY INFORMATION:

Background

On March 10, 2004, the Department published in the **Federal Register** the preliminary results of the antidumping administrative reviews of HFHTs from the PRC. *See Heavy Forged Hand Tools, Finished or Unfinished, With or Without Handles, From the People's Republic of China: Preliminary Results of Administrative Reviews, Preliminary Partial Rescission of Antidumping Duty Administrative Reviews, and Determination Not To Revoke in Part*, 69 FR 11371 (March 10, 2004) (*Preliminary Results*). In response to the Department's invitation to comment on the *Preliminary Results* of these reviews, the petitioner, Ames True Temper, and the respondents filed case briefs on April 16, 2004 and rebuttal briefs on April 21, 2004. The respondents in these reviews are Shangdong Huarong Machinery Co., Ltd. (Huarong), Liaoning Machinery Import & Export Corporation and Liaoning Machinery Import & Export Corporation, Ltd. (LMC/LIMAC), SMC, and Tianjin Machinery Import & Export Corporation (TMC). No interested party requested a public hearing in these reviews.

Scope of Review

The products covered by these administrative reviews are HFHTs comprising the following classes or kinds of merchandise: (1) Hammers and sledges with heads over 1.5 kg (3.33 pounds) (hammers/sledges); (2) bars over 18 inches in length, track tools and wedges (bars/wedges); (3) picks and mattocks (picks/mattocks); and (4) axes, adzes and similar hewing tools (axes/adzes).

HFHTs include heads for drilling hammers, sledges, axes, mauls, picks and mattocks, which may or may not be painted, which may or may not be finished, or which may or may not be imported with handles; assorted bar products and track tools including wrecking bars, digging bars, and tampers; and steel woodsplitting wedges. HFHTs are manufactured through a hot forge operation in which steel is sheared to required length, heated to forging temperature, and formed to final shape on forging equipment using dies specific to the desired product shape and size. Depending on the product, finishing operations may include shot blasting, grinding, polishing and painting, and the insertion of handles for handled products. HFHTs are currently provided for under the following Harmonized Tariff Schedule of the United States (HTSUS) subheadings: 8205.20.60, 8205.59.30, 8201.30.00, and 8201.40.60. Specifically excluded from these investigations are hammers and sledges with heads 1.5 kg. (3.33 pounds) in weight and under, hoes and rakes, and bars 18 inches in length and under.

The Department has issued four conclusive scope rulings regarding the merchandise covered by these orders: (1) On August 16, 1993, the Department found the ''Max Multi-Purpose Axe,'' imported by the Forrest Tool Company, to be within the scope of the axes/adzes order; (2) on March 8, 2001, the Department found ''18-inch'' and ''24-inch'' pry bars, produced without dies, imported by Olympia Industrial, Inc. and SMC Pacific Tools, Inc., to be within the scope of the bars/wedges order; (3) on March 8, 2001, the Department found the ''Pulaski'' tool, produced without dies by TMC, to be within the scope of the axes/adzes order; and (4) on March 8, 2001, the Department found the ''skinning axe,'' imported by Import Traders, Inc., to be within the scope of the axes/adzes order.

Period of Review

The period of review (POR) is February 1, 2002 through January 31, 2003.

Rescission of Review

We preliminarily rescinded these reviews with respect to Zhenjiang All Joy Light Industrial Products & Textiles; Linshu Jinrun Ironware & Tools Co., Ltd.; Jinhua Runhua Foreign Trade Co., Ltd.; Tian Rui International Trade Co., Ltd.; Jinhua Twin-Star Tools Co., Ltd.; Jinma, Ltd.; Hebei Machinery Import & Export Corporation; Chenzhou Estar Enterprises Ltd.; China National Machinery Import & Export Corporation; and Ningbo Tiangong Tools Co., Ltd., which reported that they did not sell merchandise subject to any of the four HFHT antidumping orders during the POR. We also preliminarily rescinded the review of Huarong and LMC/LIMAC with respect to the hammers/sledges and picks/mattocks orders, since Huarong and LMC/LIMAC reported that they made no shipments of subject hammers/sledges and picks/mattocks during the POR.

The Department reviewed CBP data, which supports the claims that these companies did not export subject merchandise during the POR. Furthermore, no party has placed evidence on the record demonstrating that these companies exported the merchandise identified above during the POR. We received comments on these preliminary rescissions from the petitioner, Huarong, and LMC/LIMAC. After analyzing these comments we continue to find that it is appropriate to rescind these reviews. For a discussion of these comments, *see* Memorandum from Jeffrey May, Deputy Assistant Secretary for Import Administration, to James J. Jochum, Assistant Secretary for Import Administration, ''Issues and Decision Memorandum for the Twelfth Administrative Review of the Antidumping Duty Orders on Heavy Forged Hand Tools from the People's Republic of China,'' dated concurrently with this notice (Issues and Decision Memorandum). Therefore, in accordance with 19 CFR 351.213(d)(3) and consistent with the Department's practice, we are rescinding these administrative reviews with respect to the companies and merchandise identified above.

Determination To Not Revoke in Part

We preliminarily determined that SMC does not qualify for revocation of the order on hammers/sledges under 19 CFR 351.222(b) and (e) because SMC did not ship hammers/sledges produced by its supplier to the United States in commercial quantities during the three consecutive years under consideration. Furthermore, we preliminarily determined that LMC/LIMAC does not qualify for revocation of the order on bars/wedges under 19 CFR 351.222(b) and (e) because the Department preliminarily found that the use of AFA was warranted with respect to LMC/LIMAC's sales of bars/wedges during the POR. The petitioner, SMC, and LMC/LIMAC submitted comments on these preliminary determinations not to revoke in part. After analyzing these comments, we continue to find that, pursuant to 19 CFR 351.222(b) and (e), SMC does not qualify for revocation of the order on hammers/sledges and LMC/LIMAC does not qualify for revocation of the order on bars/wedges. For a discussion of these comments, *see* Issues and Decision Memorandum.

Analysis of Comments Received

All issues raised in the case and rebuttal briefs by parties to these administrative reviews are addressed in

the Issues and Decision Memorandum, which is hereby adopted by this notice. A list of the issues that parties have raised is attached to this notice as an appendix. Parties can find a complete discussion of all issues raised in these reviews, and the corresponding recommendations, in the Issues and Decision Memorandum that is on file in the Central Records Unit, room B–099 of the main Department of Commerce building. In addition, the Issues and Decision Memorandum can be accessed directly on Import Administration's Web site at *http://ia.ita.doc.gov*. The paper copy and the electronic version of the Issues and Decision Memorandum are identical in content.

Facts Available

In the *Preliminary Results*, we based the dumping margins for the respondents Huarong, LMC/LIMAC, SMC, and TMC on total AFA for their sales of merchandise subject to certain HFHTs orders pursuant to sections 776(a) and 776(b) of the Tariff Act of 1930, as amended (the Act). *See Preliminary Results*, 69 FR at 11375. We continue to apply total AFA to Huarong, LMC/LIMAC, and TMC because these respondents significantly impeded our ability to (1) Complete the review of the bars/wedges order, pursuant section 751 of the Act, and (2) impose the correct antidumping duties, as mandated by section 731 of the Act. Huarong, LMC/LIMAC, and TMC participated in an ''agent'' sales scheme whereby one PRC company allowed another PRC company to enter subject merchandise under the first company's invoices. In addition, we continue to apply total AFA to certain respondents that failed to provide sales and FOP information that was requested by the Department in the reviews of the axes/adzes (Huarong, LMC/LIMAC, and SMC), bars/wedges (TMC), and picks/mattocks (SMC) antidumping orders. Lastly, we continue to find that the companies that constitute the PRC-wide entity, including Jiangsu Guotai International Group Huatai Import & Export Company, Ltd., which did not establish its entitlement to a separate rate, failed to provide certain requested information. For this reason, we continue to find that, in accordance with sections 776(a)(2)(A), (B), and (C) of the Act, it is appropriate to base the PRC-wide margin in these reviews on total AFA.

As in the *Preliminary Results*, we are assigning as AFA the PRC-wide rates published in the most recently completed administrative reviews of the HFHTs orders. *See Heavy Forged Hand Tools, Finished or Unfinished, With or Without Handles, From the People's Republic of China: Final Results of Antidumping Duty Administrative Review of the Order on Bars and Wedges*, 68 FR 53347 (September 10, 2003) (*11th Review Final Results*). As AFA, we are assigning the sales of (1) Axes/adzes made by Huarong, LMC/LIMAC, and SMC the current PRC-wide rate of 55.74 percent; (2) bars/wedges made by Huarong, LMC/LIMAC, and TMC the current PRC-wide rate of 139.31 percent; and (3) picks/mattocks made by SMC the current the PRC-wide rate of 98.77 percent. Although we are applying total AFA to the PRC-wide entity for all four classes or kinds of subject merchandise in this review, the rates assigned to this entity have not changed from the *11th Review Final Results*.

A complete explanation of the selection, corroboration, and application of AFA can be found in the *Preliminary Results*. *See Preliminary Determination*, 69 FR at 11375–11380. The Department received comments and rebuttal comments with regard to certain aspects of our selection and application of AFA. *See Issues and Decision Memorandum*, at Comments 17–21. Based on our analysis of the comments received, we have made one change in our application of AFA from the *Preliminary Results*. For the final results, the Department will not apply AFA to SMC's sales of bars/wedges. *See Issues and Decision Memorandum*, at Comment 18. Other than this change, nothing has changed since the *Preliminary Results* that would affect the Department's selection, corroboration, and application of facts available for the above-referenced companies and orders. Accordingly, for the final results, we continue to apply AFA as noted above.

Final Results of Review

We determine that the following weighted-average percentage margins exist for the period February 1, 2002, through January 31, 2003:

Manufacturer/Exporter	Margin (percent)
Shandong Huarong Machinery Corporation Limited (Huarong):	
Axes/Adzes	55.74
Bars/Wedges	139.31
Liaoning Machinery Import & Export Corporation (LMC)/Liaoning Machinery Import & Export Corporation Ltd. (LIMAC):	
Axes/Adzes	55.74
Bars/Wedges	139.31
Shandong Machinery Import & Export Corporation (SMC):	
Axes/Adzes	55.74
Bars/Wedges	5.40
Hammers/Sledges	0.02
Picks/Mattocks	98.77
Tianjin Machinery Import & Export Corporation (TMC):	
Axes/Adzes	10.49
Bars/Wedges	139.31
Hammers/Sledges	6.46
Picks/Mattocks	4.76
PRC-Wide Entity:	
Axes/Adzes	55.74
Bars/Wedges	139.31
Hammers/Sledges	27.71
Picks/Mattocks	98.77

Cash Deposit Requirements

The following deposit requirements will be effective upon publication of the final results of these administrative reviews for all shipments of HFHTs from the PRC entered, or withdrawn from warehouse, for consumption on or after the publication date of this notice, as provided for by section 751(a)(1) of the Act: (1) The cash deposit rates for the reviewed companies named above will be the rates for those firms established in the final results of these administrative reviews; (2) for any previously reviewed or investigated PRC or non-PRC exporter, not covered in these reviews, with a separate rate, the cash deposit rate will be the company-specific rate established in the most recent segment of these proceedings; (3) for all other PRC exporters, the cash deposit rates will be the PRC-wide rates established in the final results of these reviews; and (4) the cash deposit rate for any non-PRC exporter of subject merchandise from the PRC who does not have its own rate will be the rate applicable to the PRC exporter that supplied the non-PRC exporter. These deposit requirements, when imposed, shall remain in effect until publication of the final results of the next administrative reviews.

The PRC-Wide Cash Deposit Rates

The current PRC-wide cash deposit rates are 55.74 percent for Axes/Adzes, 139.31 percent for Bars/Wedges, 27.71 percent for Hammers/Sledges, and 98.77 percent for Picks/Mattocks. These rates are unchanged from the most recently completed administrative review. *See 11th Review Final Results*. These deposit requirements shall remain in effect until publication of the final results of the next administrative reviews.

Assessment Rates

Upon completion of these administrative reviews, the Department will determine, and CBP shall assess, antidumping duties on all appropriate entries. In accordance with 19 CFR 351.212(b)(1), for the respondents receiving calculated dumping margins, we calculated importer-specific per-unit duty assessment rates based on the ratio of the total amount of the dumping duties calculated for the examined sales to the total quantity of those same sales. These importer-specific per-unit rates will be assessed uniformly on all entries of each importer that were made during the POR. In accordance with 19 CFR 351.106(c)(2), we will instruct CBP to liquidate without regard to antidumping duties any entries for which the importer-specific assessment rate is *de minimis* (*i.e.*, less than 0.5 percent *ad valorem*). In testing whether any importer-specific assessment rate is *de minimis*, we used the reported data to calculate the freight on board at the port of export (FOB) price of U.S. sales and used this FOB price as an estimate for the entered value. For all shipments of subject merchandise for the four antidumping orders covering HFHTs from the PRC, exported by the respondents and imported by entities not identified by the respondents in their questionnaire responses, we will instruct CBP to assess antidumping duties at the cash deposit rate in effect on the date of the entry. Lastly, for the respondents receiving dumping rates based upon AFA, the Department, upon completion of these reviews, will instruct CBP to liquidate entries according to the AFA *ad valorem* rate. The Department will issue appraisement instructions directly to CBP upon the completion of the final results of these administrative reviews.

Reimbursement of Duties

This notice also serves as a final reminder to importers of their responsibility under 19 CFR 351.402(f) to file a certificate regarding the reimbursement of antidumping duties prior to liquidation of the relevant entries during this review period. Failure to comply with this requirement could result in the Secretary's presumption that reimbursement of antidumping duties occurred and the subsequent assessment of doubled antidumping duties.

Administrative Protective Orders

This notice also serves as a reminder to parties subject to administrative protective order (APO) of their responsibility concerning the disposition of proprietary information disclosed under APO in accordance with 19 CFR 351.305. Timely written notification of return/destruction of APO materials or conversion to judicial protective order is hereby requested. Failure to comply with the regulations and the terms of an APO is a sanctionable violation.

These final results of administrative reviews are issued and published in accordance with sections 751(a)(1) and 777(i)(1) of the Act.

Dated: September 7, 2004.

James J. Jochum,

Assistant Secretary for Import Administration.

Appendix—Issues in Decision Memorandum

Part I—Surrogate Value Issues

Comment 1: The Department should use hexagonal steel bar as a surrogate for certain FOP.

Comment 2: The Department should value marine insurance at 110 percent of invoice value.

Comment 3: The Department did not apply the proper surrogate value for railroad rails.

Comment 4: The Department should value pallets using hot- and cold-rolled sheet/strip because respondents' claims regarding the use of scrap metal for pallet manufacturing are unsupported.

Comment 5: The Department should recalculate the finished weight of shipped goods.

Comment 6: The Department should recalculate movement charges to include additional expenses.

Comment 7: The Department should value the coating on tool heads/bodies.

Part II—Company Specific Issues

1. Huarong

Comment 8: The Department should calculate a margin and assign it to Huarong if Huarong is benefitting from the rate that it has been assigned as AFA.

2. LMC/LIMAC

Comment 9: The Department should revoke the dumping order for bars/wedges produced by the Lishu factory and exported by LMC/LIMAC.

3. SMC

Comment 10: The Department should apply AFA to SMC's ocean freight expense.

Comment 11: The Department should find that SMC shipped commercial quantities and revoke the hammers/sledges order with respect to SMC.

Comment 12: The Department should include sales made by SMC through an agent that are outside the POR.

4. TMC

Comment 13: The Department should label a PRC supplier as an uncooperative interested party with respect to the axes/adzes and picks/mattocks it supplied to SMC and apply AFA to TMC's sales of axes/adzes, hammers/sledges, and bars/wedges produced by this PRC supplier.

Comment 14: The Department should perform a *Shakeproof* analysis for TMC, which will show market economy purchases of ocean freight services to be insignificant.

Comment 15: The Department should increase TMC's normal value (NV) to account for the commission paid to its U.S. sales office.

Comment 16: The Department should disregard the variable Style (3.21) used by TMC in reporting hammer sales.

Part III—Issues Regarding the Use of Total AFA and Rescission of Certain Reviews

Comment 17: The Department should not apply AFA while scope inquiries are pending.

Comment 18: The Department should not apply AFA for the failure to report cast products.

Comment 19: The Department should not apply AFA to agent sales made by Huarong, LMC/LIMAC, and TMC.

Comment 20: The Department should establish ''combination'' cash deposit rates and utilize ''master list'' assessment rates.

Comment 21: The Department should recalculate the AFA and PRC-wide rate of 139.31 percent for bars/wedges because this rate contains subsidized prices.

Comment 22: The Department should reconsider its determination to rescind the review of hammers/sledges and picks/mattocks with respect to Huarong and LMC/LIMAC.

Part IV—Issues Regarding Assessment Instructions

Comment 23: The Department should deny the request by Olympia Industrial Incorporated to instruct CBP to liquidate entries of scrapers and tampers.

Comment 24: The Department should correct the ministerial error in the draft assessment instructions.

[FR Doc. E4–2194 Filed 9–14–04; 8:45 am]

BILLING CODE 3510–DS–P

DEPARTMENT OF COMMERCE

National Institute of Standards and Technology

National Construction Safety Team Advisory Committee Meeting

AGENCY: National Institute of Standards and Technology, United States Department of Commerce.

ACTION: Notice of partially closed meeting.

SUMMARY: The National Construction Safety Team (NCST) Advisory Committee (Committee), National Institute of Standards and Technology (NIST), will meet Tuesday, October 5, 2004, from 8:30 a.m. to 5 p.m. and Wednesday, October 6, 2004, from 8:30 a.m. to 3 p.m. The primary purpose of this meeting is to discuss draft findings of the Federal Building and Fire Safety Investigation of the World Trade Center Disaster (WTC Investigation) and the Rhode Island Nightclub Investigation. Consequently, all of the first day and all but the last one and one-half hours of the second day will be held in closed session. The agenda may change to accommodate Committee business. The final agenda will be posted on the NIST Web site at *http://www.nist.gov/ncst.*

DATES: The meeting will convene on October 5, 2004, at 8:30 a.m. and will adjourn at 3 p.m. on October 6, 2004. The closed portion of the meeting is scheduled to begin on October 5 at 8:30 a.m. and to end at 1:45 p.m. on October 6, 2004. The last portion of the meeting from 2 p.m. to 3 p.m. on October 6, 2004, will be open to the public.

ADDRESSES: The meeting will be held in the Administration Building, Room A1038 at NIST, Gaithersburg, Maryland. Please note admittance instructions under the **SUPPLEMENTARY INFORMATION** section of this notice.

FOR FURTHER INFORMATION CONTACT: Stephen Cauffman, National Construction Safety Team Advisory Committee, National Institute of Standards and Technology, 100 Bureau Drive, MS 8611, Gaithersburg, Maryland 20899–8611. Mr. Cauffman's e-mail address is *stephen.cauffman@nist.gov* and his phone number is (301) 975–6051.

SUPPLEMENTARY INFORMATION: The Committee was established pursuant to Section 11 of the National Construction Safety Team Act (15 U.S.C. 7310 *et seq.*). The Committee is composed of nine members appointed by the Director of NIST who were selected for their technical expertise and experience, established records of distinguished professional service, and their knowledge of issues affecting teams established under the NCST Act. The Committee will advise the Director of NIST on carrying out investigations of building failures conducted under the authorities of the NCST Act that became law in October 2002 and will review the procedures developed to implement the NCST Act and reports issued under section 8 of the NCST Act. Background information on the NCST Act and information on the NCST Advisory Committee is available at *http://www.nist.gov/ncst.*

Pursuant to the Federal Advisory Committee Act, 5 U.S.C. app. 2, notice is hereby given that the National Construction Safety Team (NCST) Advisory Committee (Committee), National Institute of Standards and Technology (NIST), will meet Tuesday, October 5, 2004, from 8:30 a.m. to 5 p.m. and Wednesday, October 6, 2004, from 8:30 a.m. to 3 p.m. at NIST headquarters in Gaithersburg, Maryland.

The primary purpose of this meeting is to present draft findings of the Federal Building and Fire Safety Investigation of the World Trade Center Disaster (WTC Investigation) and the Rhode Island Nightclub Investigation. The Assistant Secretary for Administration, with the concurrence of the General Counsel, formally determined on August 2, 2004, that portions of the meeting of the National Construction Safety Team Advisory Committee that involve discussions regarding the proprietary information and trade secrets of third parties, data and documents that may also be used in criminal cases or lawsuits, matters the premature disclosure of which would be likely to significantly frustrate implementation of a proposed agency action, and data collection status and the issuance of subpoenas may be closed in accordance with 5 U.S.C. 552b(c)(4), (5), (9)(B), and (10) respectively. Consequently, all of the first day and all but the last one and one-half hours of the second day will be held in closed session. The agenda may change to accommodate Committee business. The final agenda will be posted on the NIST Web site at *http://www.nist.gov/ncst.*

Individuals and representatives of organizations who would like to offer comments and suggestions related to the Committee's affairs, the WTC Investigation, or the Rhode Island Investigation are invited to request a place on the agenda. On October 6, 2004, approximately one-half hour will be reserved for public comments, and speaking times will be assigned on a first-come, first-served basis. The amount of time per speaker will be determined by the number of requests received, but is likely to be 5 minutes each. Questions from the public will not be considered during this period. Speakers who wish to expand upon their oral statements, those who had wished to speak but could not be accommodated on the agenda, and those who were unable to attend in person are invited to submit written statements to the National Construction Safety Team Advisory Committee, National Institute of Standards and Technology, 100 Bureau Drive, MS 8611, Gaithersburg, Maryland 20899–8611, via fax at (301) 975–6122, or electronically by e-mail to *ncstac@nist.gov.*

All visitors to the NIST site are required to pre-register to be admitted. Anyone wishing to attend this meeting must register by close of business Friday, October 1, 2004, in order to attend. Please submit your name, time of arrival, e-mail address and phone number to Stephen Cauffman and he will provide you with instructions for admittance. Non-U.S. citizens must also submit their country of citizenship, title, employer/sponsor, and address. Mr. Cauffman's e-mail address is *stephen.cauffman@nist.gov* and his phone number is (301) 975–6051.

Dated: September 9, 2004.

Hratch G. Semerjian,

Acting Director.

[FR Doc. 04–20741 Filed 9–14–04; 8:45 am]

BILLING CODE 3510–13–P

DEPARTMENT OF COMMERCE

National Institute of Standards and Technology

Announcing a Public Workshop on Personal Identity Verification (PIV) of Federal Employees/Contractors

AGENCY: National Institute of Standards and Technology (NIST).

ACTION: Notice of public workshop.

SUMMARY: The National Institute of Standards and Technology (NIST) announces a public workshop to obtain information on secure and reliable methods of verifying the identity of Federal employees and Federal contractors who are authorized access to Federal facilities and Federal information systems. An agenda and related information for the workshop will be available before the workshop from the NIST Computer Security Resource Center Web site at *http://csrc.nist.gov.* This workshop is not being held in anticipation of a procurement activity.

DATES: The PIV Public workshop will be held on October 7, 2004, from 8 a.m. to 5 p.m.

ADDRESSES: The PIV Public workshop will take place in a hotel facility in Gaithersburg, Maryland. Information about the meeting location and hotel accommodations will be available at *http://csrc.nist.gov* by September 8, 2004.

Registration: Registration prior to 5 p.m. October 3, 2004, is required. All registrations must be done online at *https://rproxy.nist.gov/CRS/.* Please go to this Conference Registration link and complete the registration form for the October 7, 2004 PIV Public Workshop. The registration fee is $95.00 and will include a continental breakfast and a deli-style lunch. A visitor's identification badge will be issued to all registered participants. The registrar for the workshop is Teresa Vicente (telephone: 301–975–3883; e-mail: *teresa.vicente@nist.gov*).

FOR FURTHER INFORMATION CONTACT: Curt Barker (e-mail: *wbarker@nist.gov;* telephone: 301–975–8443; fax 301–948–1233) or Dr. Dennis Branstad (e-mail: *Branstad@nist.gov;* telephone: 301–975–4060) for technical information regarding the workshop.

Background Information: On August 27, 2004, President Bush signed the Homeland Security Presidential Directive/HSPD–12 (see *http://www.whitehouse.gov/news/releases/2004/08/20040827–8.html*) establishing a policy for a Common Identification Standard for Federal Employees and Contractors. This Directive states that the Secretary of Commerce shall promulgate a Federal standard within six months that assures secure and reliable forms of identification of Federal Employees and Federal Contractor Employees in many applications. The principal objectives of the standard are to create a secure and reliable automated system that may be used Government-wide to: (1) Establish the authentic true identity of an individual; (2) issue an PIV token (e.g., smartcard) to each authenticated individual which can later be used to verify the identity of the individual using appropriate technical means when access to a secure Federal facility or information system is requested; (3) be based on graduated criteria that provide appropriate levels of assurance and security to the application; (4) be strongly resistant to identity fraud, counterfeiting, and exploitation by individuals, terrorist organizations, or conspiracy groups; and (5) initiate development and use of interoperable automated systems meeting these objectives.

NIST is planning to propose a Federal Information Processing Standard (FIPS) tentatively entitled Personal Identity Verification as the primary document specified in HSPD–12. The envisioned standard may likely address operational requirements and the technical framework, architecture, and specifications for an automated system that will provide secure and reliable forms of identification to be issued by the Federal Government to its employees and contractors (including contractor employees). We anticipate that the technical focus will primarily be on electronic identity verification and access authorization credentials securely contained in an integrated-circuit token (e.g., smartcard) containing biometric characteristics (e.g., fingerprint image, facial image) of the individual to whom the token was issued for later identity verification. The standard shall not apply to identification associated with national security systems as defined by 44 U.S.C. 3542(b)(2).

Authority: NIST is conducting this workshop in accordance with HSPD–12 and within its authority under the Federal Information Security Management Act of 2002, the Information Technology Management Reform Act of 1996, Executive Order 13011, and OMB Circular A–130.

Dated: September 9, 2004.

Hratch G. Semerjian,

Acting Director.

[FR Doc. 04–20740 Filed 9–14–04; 8:45 am]

BILLING CODE 3510–CN–U

DEPARTMENT OF DEFENSE

Office of the Secretary

Proposed Collection; Comment Request.

AGENCY: Office of the Under Secretary of Defense (Personnel and Readiness).

ACTION: Notice.

In compliance with Section 3506(c)(2)(A) of the Paperwork Reduction Act of 1995, the Office of the Under Secretary of defense (Personnel and Readiness) announces the following proposed public information collection and seeks public comment on the provisions thereof. Comments are invited on: (a) Whether the proposed collection of information is necessary for the proper performance of the functions of the agency, including whether the information shall have practical utility; (b) the accuracy of the agency's estimate of burden of the proposed information collection; (c) ways to enhance the quality, utility, and clarity of the information to be collected; and (d) ways to minimize the burden of the information collection on respondents, including through the use of automated collection techniques or other forms of information technology.

DATES: Consideration will be given to all comments received by November 15, 2004.

ADDRESSES: Written comments and recommendations on the proposed information collection should be sent to the Department of Defense Education Activity, 4040 North Fairfax Drive, Arlington, VA 22203–1635, ATTN: Ms. Judith L. Williams.

FOR FURTHER INFORMATION CONTACT: To request more information on this proposed information collection or to obtain a copy of the proposal and associated collection instruments, please write to the above address or call at (703) 588–3143.

Title and OMB Control Number: ''Department of Defense Education Activity (DoDEA) Customer Satisfaction Surveys for Sponsors and Students''; OMB Control Number 0704–0421.

Needs and Uses: The DoDEA Customer Satisfaction Surveys are a tool used to measure the satisfaction level of

sponsors and students with the programs and services provided by the DoD Education Activity (DoDEA). This collection is necessary to meet DoD Reform Initiative Directive #23: Defense Agency Performance Contracts which states: ''The Directors of the specified Agencies and Field Activities will submit a performance contract covering the period of the Future Years Defense Plan (FYDP) FY 2000 through FY 2005. Each performance contract shall include measures of customer satisfaction with the goods and services provided by the Agency or Field Activity, including the timeliness of deliveries of products and services.''

Affected Public: Individuals or households.

Annual Burden Hours: 3,261 hours.

Number of Respondents: 11,901.

Respondes Per Respondent: 1.

Average Burden Per Response: 15 minutes.

Frequency: Biennially.

SUPPLEMENTARY INFORMATION:

Summary of Information Collection

The DoDEA Customer Satisfaction Surveys for Sponsors and Students will be administered to all sponsors within the DoDEA school system, as well as students in grades 4–12. The survey is completely voluntary and will be administered through an on-line, web-based technology. In order to have national comparison data, the survey questions were adapted from the Phi Delta Kappa/Gallup Poll of the Public's Attitudes Toward Schools. Some questions were altered slightly so that the wording more closely matched the unique DoDEA educational experience, however, any alterations should not affect the interpretation and comparison to the national data. The surveys will give sponsors and students an opportunity to comment on their levels of satisfaction with programmatic issues related to DoD schools. Some of the topics included in the surveys are curriculum, communication, and technology. The surveys will be administered biennially.

The information derived from these surveys will be used to improve planning efforts at all levels throughout DoDEA. Schools, districts, and areas will use the survey results to gain insight into the satisfaction levels of sponsors and students, which is one of many measures used for future planning of programs and services offered to DoDEA's students. The survey results will also be used to monitor the DoDEA Community Strategic Plan.

Dated: September 8, 2004.

L.M. Bynum,

Alternate OSD Federal Register Liaison Officer, Department of Defense.

[FR Doc. 04–20721 Filed 9–14–04; 8:45 am]

BILLING CODE 5001–06–M

DEPARTMENT OF DEFENSE

Office of the Secretary

Proposed Collection; Comment Request

AGENCY: Department of Defense, Office of the Under Secretary of Defense for Acquisition, Technology, and Logistics.

ACTION: Notice.

In compliance with Section 3506(c)(2)(A) of the Paperwork Reduction Act of 1995, the Office of the Under Secretary of Defense for Acquisition, Technology, and Logistics, announces the proposed extension of a currently approved collection and seeks public comment on the provisions thereof. Comments are invited on: (a) Whether the proposed collection of information is necessary for the proper performance of the functions of the agency, including whether the information shall have practical utility; (b) the accuracy of the agency's estimate of the burden of the proposed information collection; (c) ways to enhance the quality, utility, and clarity of the information to be collected; and (d) ways to minimize the burden of the information collection on respondents, including through the use of automated collection techniques or other forms of information technology.

DATES: Consideration will be given to all comments received by November 15, 2004.

ADDRESSES: Interested parties should submit written comments and recommendations on the proposed information collection to: U.S./Canada Joint Certification Office, Federal Center, DLIS–SB, Attn: Stephen G. Riley, 74 Washington Ave., N, Suite 7, Battle Creek, MI 49017–3084, E-mail: *Stephen.Riley@dla.mil.*

FOR FURTHER INFORMATION CONTACT: To request further information on this proposed information collection, or to obtain a copy of the proposal and associated collection instrument, please write to the above address.

Title Associated Form and OMB Number: Military Critical Technical Data Agreement, DD Form 2345, OMB Control Number 0704–0207.

Needs and Uses: The information collection requirement is necessary as a basis for certifying enterprises or individuals to have access to DoD export-controlled militarily critical technical data subject to the provisions of 32 CFR 250. Enterprises and individuals that need access to unclassified DoD-controlled militarily critical technical data must certify on DD Form 2345, Militarily Critical Technical Data Agreement, that data will be used only in ways that will inhibit unauthorized access and maintain the protection afforded by U.S. export control laws. The information collected is disclosed only to the extent consistent with prudent business practices, current regulations, and statutory requirements and is so indicated on the Privacy Act Statement of DD Form 2345.

Affected Public: Businesses or other for-profit; non-profit institutions.

Annual Burden Hours: 2,000.

Number of Annual Respondents: 6,000.

Annual Responses to Respondent: 1.

Average Burden Per Response: 20 minutes.

Frequency: On occasion.

SUPPLEMENTARY INFORMATION:

Summary of Information Collection

Use of DD Form 2345 permits U.S. and Canada defense contractors to certify their eligibility to obtain certain unclassified technical data with military and space applications. Nonavailability of this information prevents defense contractors from accessing certain restricted databases and obstructs conference attendance where restricted data will be discussed.

Dated: September 9, 2004.

L.M. Bynum,

Alternate OSD Federal Register Liaison Officer, Department of Defense.

[FR Doc. 04–20722 Filed 9–14–04; 8:45 am]

BILLING CODE 5001–06–M

DEPARTMENT OF DEFENSE

Office of the Secretary

[Transmittal No. 04-14]

36(b)(1) Arms Sales Notification

AGENCY: Department of Defense, Defense Security Cooperation Agency.

ACTION: Notice.

SUMMARY: The Department of Defense is publishing the unclassified text of a section 36(b)(1) arms sales notification. This is published to fulfill the requirements of section 155 of Public Law 104–164 dated 21 July 1996.

FOR FURTHER INFORMATION CONTACT: Ms. J. Hurd, DSCA/OPS–ADMIN, (703) 604–6575.

The following is a copy of a letter to the Speaker of the House of Representatives, Transmittal 04–14 with attached transmittal and policy justification.

Dated: September 9, 2004.

L.M. Bynum,

Alternate OSD Federal Register Liaison Officer, Department of Defense.

BILLING CODE 5001–06–M

DEFENSE SECURITY COOPERATION AGENCY

WASHINGTON, DC 20301-2800

7 SEP 2004
In reply refer to:
I-04/006187

The Honorable J. Dennis Hastert
Speaker of the House of Representatives
Washington, D.C. 20515-6501

Dear Mr. Speaker:

Pursuant to the reporting requirements of Section 36(b)(1) of the Arms Export Control Act, as amended, we are forwarding herewith Transmittal No. 04-14, concerning the Department of the Air Force's proposed Letter(s) of Offer and Acceptance to the Republic of Korea for defense articles and services estimated to cost $70 million. Soon after this letter is delivered to your office, we plan to notify the news media.

Sincerely,

JEFFREY B. KOHLER
LIEUTENANT GENERAL, USAF
DIRECTOR

Enclosure:
1. **Transmittal No. 14**
2. **Policy Justification**

Same ltr to: House Committee on International Relations
Senate Committee on Foreign Relations
House Committee on Armed Services
Senate Committee on Armed Services
House Committee on Appropriations
Senate Committee on Appropriations

Transmittal No. 04-14

Notice of Proposed Issuance of Letter of Offer
Pursuant to Section 36(b)(1)
of the Arms Export Control Act, as amended

(i) **Prospective Purchaser**: Republic of Korea

(ii) **Total Estimated Value**:

Major Defense Equipment*	$ 0 million
Other	$70 million
TOTAL	$70 million

(iii) **Description and Quantity or Quantities of Articles or Services under Consideration for Purchase**: continuing contractor maintenance and training technical services for depot maintenance support for Peace Pioneer program equipment, spare and repair parts, support equipment, supply support, personnel training and training equipment, publications and technical data, contractor engineering services and other related elements of logistics support.

(iv) **Military Department**: Air Force (QDE)

(v) **Prior Related Cases, if any**:
FMS case QCR - $65 million - 14Jun02
FMS case QCQ - $60 million - 12Jun02
FMS case SIL - $164 million - 28Jun96
FMS case SIM - $197 million - 28Jun96

(vi) **Sales Commission, Fee, etc., Paid, Offered, or Agreed to be Paid**: none

(vii) **Sensitivity of Technology Contained in the Defense Article or Defense Services Proposed to be Sold**: none

(viii) **Date Report Delivered to Congress**: 7 SEP 2004

* as defined in Section 47(6) of the Arms Export Control Act.

POLICY JUSTIFICATION

Republic of Korea – Depot Maintenance Support

The Republic of Korea has requested a possible sale of continuing contractor maintenance and training technical services for depot maintenance support for Peace Pioneer program equipment, spare and repair parts, support equipment, supply support, personnel training and training equipment, publications and technical data, contractor engineering services and other related elements of logistics support. The estimated cost is $70 million.

This proposed sale will contribute to the foreign policy and national security of the United States by helping to improve the security of a friendly country that has been and continues to be an important force for political stability and economic progress in Northeast Asia.

The Republic of Korea needs this depot maintenance support to sustain its Peace Pioneer prime mission equipment (PME) in order to maintain full defense capability due to the political situation. The Peace Pioneer program was notified to Congress in 1995 for a signal intelligence collection system with PME, attendant ground links, and ground processing equipment. This proposed sale is for contractor depot maintenance support to be provided in CONUS by the contractor. The depot maintenance will be done on the PME that is the actual hardware contained in the RC-1800 aircraft, which is used to gather the intelligence data, and the ground station hardware, which is used to download and interpret the data. This proposed sale is for continuing contractor depot maintenance support and will provide approximately eight more years of coverage.

The contractor maintenance and training technical services will not alter the basic military balance in the region.

The prime contractor will be L-3 Communications Integrated Systems in Greenville, Texas. There are no known offset agreements proposed in connection with this potential sale.

Implementation of this proposed sale will not require the assignment of any additional U.S. Government representatives or contractor representatives to Korea.

There will be no adverse impact on U.S. defense readiness as a result of this proposed sale.

[FR Doc. 04–20727 Filed 9–14–04; 8:45 am]
BILLING CODE 5001–06–C

DEPARTMENT OF DEFENSE

Office of the Secretary

[Transmittal No. 04–20]

36(b)(1) Arms Sales Notification

AGENCY: Department of Defense, Defense Security Cooperation Agency.

ACTION: Notice.

SUMMARY: The Department of Defense is publishing the unclassified text of a section 36(b)(1) arms sales notification. This is published to fulfill the requirements of section 155 of Public Law 104–164 dated 21 July 1996.

FOR FURTHER INFORMATION CONTACT: Ms. J. Hurd, DSCA/OPS–ADMIN, (703) 604–6575.

The following is a copy of a letter to the Speaker of the House of Representatives, Transmittal 04–20 with attached transmittal and policy justification.

Dated: September 9, 2004.

L.M. Bynum,

Alternate OSD Federal Register Liaison Officer, Department of Defense.

BILLING CODE 5001–06–M

DEFENSE SECURITY COOPERATION AGENCY

WASHINGTON, DC 20301-2800

7 SEP 2004
In reply refer to:
I-04/007630

The Honorable J. Dennis Hastert
Speaker of the House of
Representatives
Washington, D.C. 20515-6501

Dear Mr. Speaker:

Pursuant to the reporting requirements of Section 36(b)(1) of the Arms Export Control Act, as amended, we are forwarding herewith Transmittal No. 04-20, concerning the Department of the Army's proposed Letter(s) of Offer and Acceptance (LOA) to Israel for defense articles and services estimated to cost $102 million. Soon after this letter is delivered to your office, we plan to notify the news media.

Sincerely,

JEFFREY B. KOHLER
LIEUTENANT GENERAL, USAF
DIRECTOR

Enclosures:
1. Transmittal No. 04-20
2. Policy Justification

Same ltr to: House Committee on International Relations
Senate Committee on Foreign Relations
House Committee on Armed Services
Senate Committee on Armed Services
House Committee on Appropriations
Senate Committee on Appropriations

Transmittal No. 04-20

Notice of Proposed Issuance of Letter of Offer
Pursuant to Section 36(b)(1)
of the Arms Export Control Act, as amended

(i) **Prospective Purchaser: Israel**

(ii) **Total Estimated Value:**

Major Defense Equipment*	$ 0 million
Other	$102 million
TOTAL	$102 million

(iii) **Description and Quantity or Quantities of Articles or Services under Consideration for Purchase: JP-8 aviation jet fuel**

(iv) **Military Department: Army (ZCF)**

(v) **Prior Related Cases, if any:**
FMS case YWJ - $ 89 million - 01Dec00
FMS case YNV - $103 million - 27Sep96
FMS case YLM - $ 60 million – 28Nov95

(vi) **Sales Commission, Fee, etc., Paid, Offered, or Agreed to be Paid: none**

(vii) **Sensitivity of Technology Contained in the Defense Article or Defense Services Proposed to be Sold: none**

(viii) **Date Report Delivered to Congress:** 7 SEP 2004

* as defined in Section 47(6) of the Arms Export Control Act.

POLICY JUSTIFICATION

Israel - JP-8 Aviation Jet Fuel

The Government of Israel has requested a possible purchase of JP-8 aviation jet fuel. The estimated cost is $102 million.

This proposed sale will contribute to the foreign policy and national security of the United States by helping to improve the security of a friendly country which has been, and continues to be, an important force for political stability and economic progress in the Middle East.

The proposed sale of the JP-8 aviation fuel will enable Israel to maintain the operational capability of its aircraft inventory. Israel will have no difficulty absorbing this additional fuel into their armed forces.

The proposed sale of this JP-8 aviation fuel will not affect the basic military balance in the region.

Procurement of the aviation jet fuel will be from the same contractors providing aviation fuel to the U.S. armed forces. There are no known offset agreements proposed in connection with this potential sale.

Implementation of this proposed sale will not require the assignment of any additional U.S. Government or contractor representatives to Israel.

There will be no adverse impact on U.S. defense readiness as a result of this proposed sale.

[FR Doc. 04–20728 Filed 9–14–04; 8:45 am]
BILLING CODE 5001–06–C

DEPARTMENT OF DEFENSE

Office of the Secretary

[Transmittal No. 04–29]

36(b)(1) Arms Sales Notification

AGENCY: Department of Defense, Defense Security Cooperation Agency.

ACTION: Notice.

SUMMARY: The Department of Defense is publishing the unclassified text of a section 36(b)(1) arms sales notification. This is published to fulfill the requirements of section 155 of Public Law 104–164 dated 21 July 1996.

FOR FURTHER INFORMATION CONTACT: Ms. J. Hurd, DSCA/OPS–ADMIN, (703) 604–6575.

The following is a copy of a letter to the Speaker of the House of Representatives, Transmittal 04–29 with attached transmittal and policy justification.

Dated: September 9, 2004.

L. M. Bynum,

Alternate OSD Federal Register Liaison Officer, Department of Defense.

BILLING CODE 5001–06–M

DEFENSE SECURITY COOPERATION AGENCY

WASHINGTON, DC 20301-2800

7 SEP 2004
In reply refer to:
I-04/008581

The Honorable J. Dennis Hastert
Speaker of the House of
Representatives
Washington, D.C. 20515-6501

Dear Mr. Speaker:

Pursuant to the reporting requirements of Section 36(b)(1) of the Arms Export Control Act, as amended, we are forwarding herewith Transmittal No. 04-29 and under separate cover the classified annex thereto. This Transmittal concerns the Department of the Army's proposed Letter(s) of Offer and Acceptance to Japan for defense articles and services estimated to cost $79 million. Soon after this letter is delivered to your office, we plan to notify the news media of the unclassified portion of this Transmittal.

Sincerely,

JEFFREY B. KOHLER
LIEUTENANT GENERAL, USAF
DIRECTOR

Enclosures:
1. Transmittal No. 04-29
2. Policy Justification

Separate Cover:
Classified Annex

Same ltr to: House Committee on International Relations
Senate Committee on Foreign Relations
House Committee on Armed Services
Senate Committee on Armed Services
House Committee on Appropriations
Senate Committee on Appropriations

Transmittal No. 04-29

Notice of Proposed Issuance of Letter of Offer
Pursuant to Section 36(b)(1)
of the Arms Export Control Act, as amended

(i) **Prospective Purchaser: Japan**

(ii) **Total Estimated Value:**

Major Defense Equipment*	$78 million
Other	$ 1 million
TOTAL	$79 million

(iii) **Description and Quantity or Quantities of Articles or Services under Consideration for Purchase: 20 PATRIOT Advanced Capability-3 (PAC-3) (10 packs containing 2 missiles each) guided missiles, support equipment, modification kits, fire solution computer, publications, personnel training, spare and repair parts, supply support, U.S. Government and contractor technical assistance and other related elements of logistics support.**

(iv) **Military Department: Army (WYN)**

(v) **Prior Related Cases, if any: none**

(vi) **Sales Commission, Fee, etc., Paid, Offered, or Agreed to be Paid: none**

(vii) **Sensitivity of Technology Contained in the Defense Article or Defense Services Proposed to be Sold: See Annex under separate cover.**

(viii) **Date Report Delivered to Congress:** 7 SEP 2004

* **as defined in Section 47(6) of the Arms Export Control Act.**

POLICY JUSTIFICATION

Japan - PATRIOT Advanced Capability-3 (PAC-3) Guided Missiles

The Government of Japan has requested a possible sale of 20 PATRIOT Advanced Capability-3 (PAC-3) (10 packs containing 2 missiles each) guided missiles, support equipment, modification kits, fire solution computer, publications, personnel training, spare and repair parts, supply support, U.S. Government and contractor technical assistance and other related elements of logistics support. The estimated cost is $79 million.

Japan is one of the major political and economic powers in East Asia and the Western Pacific and a key ally of the United States in ensuring the peace and stability of that region. It is vital to the U.S. national interest to assist Japan to develop and maintain a strong and ready self-defense capability, which will contribute to an acceptable military balance in the area. This proposed sale is consistent with these U.S. objectives and with the 1960 Treaty of Mutual Cooperation and Security.

This proposed sale is in support of a PATRIOT PAC-3 ground systems co-production program. The proposed sale will provide Japan with an effective, state-of-the-art, anti-tactical missile capability and will greatly improve the defense posture of Japan. Japan will have no difficulty absorbing these PAC-3 missiles into its inventory.

The proposed sale of this equipment and support will not affect the basic military balance in the region.

The prime contractor will be Lockheed-Martin in Dallas, Texas. There are no known offset agreements proposed in connection with this potential sale.

Implementation of this proposed sale will require the assignment of two U.S. Government and eight contractor representatives to Japan following delivery of the missiles.

There will be no adverse impact on U.S. defense readiness as a result of this proposed sale.

[FR Doc. 04–20729 Filed 9–14–04; 8:45 am]
BILLING CODE 5001–06–C

DEPARTMENT OF DEFENSE

Office of the Secretary

[Transmittal No. 04–22]

36(b)(1) Arms Sales Notification

AGENCY: Department of Defense, Defense Security Cooperation Agency.

ACTION: Notice.

SUMMARY: The Department of Defense is publishing the unclassified text of a section 36(b)(1) arms sales notification. This is published to fulfill the requirements of section 155 of Public Law 104–164 dated 21 July 1996.

FOR FURTHER INFORMATION CONTACT: Ms. J. Hurd, DSCA/OPS–ADMIN, (703) 604–6575.

The following is a copy of a letter to the Speaker of the House of Representatives, Transmittal 04–22 with attached transmittal and policy justification.

Dated: September 9, 2004.

L. M. Bynum,

Alternate OSD Federal Register Liaison Officer, Department of Defense.

BILLING CODE 5001–06–M

DEFENSE SECURITY COOPERATION AGENCY

WASHINGTON, DC 20301-2800

7 SEP 2004

In reply refer to:
I-04/007890

The Honorable J. Dennis Hastert
Speaker of the House of
Representatives
Washington, D.C. 20515-6501

Dear Mr. Speaker:

Pursuant to the reporting requirements of Section 36(b)(1) of the Arms Export Control Act, as amended, we are forwarding herewith Transmittal No. 04-22, concerning the Department of the Army's proposed Letter(s) of Offer and Acceptance to Pakistan for defense articles and services estimated to cost $78 million. Soon after this letter is delivered to your office, we plan to notify the news media.

Sincerely,

JEFFREY B. KOHLER
LIEUTENANT GENERAL, USAF
DIRECTOR

Enclosures
1. **Transmittal No. 04-22**
2. **Policy Justification**

Same ltr to: House Committee on International Relations
Senate Committee on Foreign Relations
House Committee on Armed Services
Senate Committee on Armed Services
House Committee on Appropriations
Senate Committee on Appropriations

Transmittal No. 04-22

Notice of Proposed Issuance of Letter of Offer
Pursuant to Section 36(b)(1)
of the Arms Export Control Act, as amended

(i) **Prospective Purchaser:** Pakistan

(ii) **Total Estimated Value:**

Major Defense Equipment*	$ 0 million
Other	$78 million
TOTAL	$78 million

(iii) **Description and Quantity or Quantities of Articles or Services under Consideration for Purchase:** Harris High Frequency/Very High Frequency radio systems, which include 1,635 20-Watt High Frequency (HF) Man Packs, 1,635 20-Watt HF Vehicular Systems, 50 150-Watt HF Vehicular Systems, six (6) 400-Watt HF Base Station Systems, two (2) Radio Frequency Remote Control Systems, ancillary equipment, spare and repairs parts, support equipment, personnel training and training equipment, publications, U.S. Government and contractor engineering and logistics services and other related elements of program support.

(iv) **Military Department:** Army (VLY)

(v) **Prior Related Cases, if any:** none

(vi) **Sales Commission, Fee, etc., Paid, Offered, or Agreed to be Paid:** none

(vii) **Sensitivity of Technology Contained in the Defense Article or Defense Services Proposed to be Sold:** none

(viii) **Date Report Delivered to Congress:** 7 SEP 2004

* as defined in Section 47(6) of the Arms Export Control Act.

POLICY JUSTIFICATION

Pakistan – HF/VHF Radio Systems

The Government of Pakistan has requested a possible sale for Harris High Frequency/Very High Frequency radio systems, which include 1,635 20-Watt High Frequency (HF) Man Packs, 1,635 20-Watt HF Vehicular Systems, 50 150-Watt HF Vehicular Systems, six (6) 400-Watt HF Base Station Systems, two (2) Radio Frequency Remote Control Systems, ancillary equipment, spare and repairs parts, support equipment, personnel training and training equipment, publications, U.S. Government and contractor engineering and logistics services and other related elements of program support. The estimated cost is $78 million.

This proposed sale will contribute to furthering the foreign policy and national security of the United States by helping a friendly country provide for its own security against terrorist activity along its porous borders.

The radios will enable Pakistan to improve on its capability to provide current and updated intelligence between patrols and higher headquarters. Also, the radios will increase interoperability between Pakistan and the U.S. and coalition forces assisting in the efforts to curtail and eliminate terrorist activities. Pakistan will have no difficulty absorbing this equipment into its armed forces.

The proposed sale of this equipment and support will not affect the basic military balance in the region.

The prime contractor is Harris Corporation of Rochester, New York. There are no known offset agreements proposed in connection with this potential sale.

Implementation of this proposed sale will require the assignment of a contractor field service representative up to two years to Pakistan. There will be two contractor representatives to provide training and several U.S. Government and contractor representatives will participate in program management and technical reviews for up to four weeks.

There will be no adverse impact on U.S. defense readiness as a result of this proposed sale.

[FR Doc. 04–20730 Filed 9–14–04; 8:45 am]
BILLING CODE 5001–06–C

DEPARTMENT OF DEFENSE

Office of the Secretary

Renewal of the Defense Intelligence Agency Advisory Board

AGENCY: Department of Defense.

ACTION: Notice.

SUMMARY: The Defense Intelligence Agency Advisory Board (DIA/AB) has been renewed in consonance with the public interest, and in accordance with the provisions of Public Law 92–463, the ''Federal Advisory Committee Act.''

The DIA/AB will provide the Director, Defense Intelligence Agency (DIA) with expertise and advice on current and long-term operational and intelligence matters covering the total range of DIA's mission. The DIA/AB will address the top priorities for the DIA intelligence mission.

The Board will be composed of not more than 20 members and include officials of other government agencies or departments, senior officials from large and small corporations, private consultants, and senior members of the academic community.

FOR FURTHER INFORMATION CONTACT: Please contact Jane McGehee, Defense Intelligence Agency, telephone: 703–693–9567.

Dated: September 8, 2004.

L.M. Bynum,

Alternate OSD Federal Register Liaison Officer, Department of Defense.

[FR Doc. 04–20725 Filed 9–14–04; 8:45 am]
BILLING CODE 5001–06–M

DEPARTMENT OF DEFENSE

Office of the Secretary

Manual for Courts-Martial; Proposed Amendments

AGENCY: Joint Service Committee on Military Justice (JSC).

ACTION: Notice of proposed amendments to the Manual for Courts-Martial, United States (2002 ed.) and notice of public meeting.

SUMMARY: The Department of Defense is considering recommending changes to the Manual for Courts-Martial, United States (2002 ed.) (MCM). The proposed changes constitute the 2004 annual review required by the MCM and DoD Directive 5500.17, ''Role and Responsibilities of the Joint Service Committee (JSC) on Military Justice,'' May 3,2003. The proposed changes concern the rules of procedure and evidence and the punitive articles

applicable in trials by courts-martial. These proposed changes have not been coordinated within the Department of Defense under DoD Directive 5500.1, ''Preparation and Processing of Legislation, Executive Orders, Proclamations, and Reports and Comments Thereon,'' May 21, 1964, and do not constitute the official position of the Department of Defense, the Military Departments, or any other Government agency.

This notice also sets forth the date, time and location for the public meeting of the JSC to discuss the proposed changes.

This notice is provided in accordance with DoD Directive 5500.17, ''Role and Responsibilities of the Joint Service Committee (JSC) on Military Justice,'' May 3, 2003. This notice is intended only to improve the internal management of the Federal Government. It is not intended to create any right or benefit, substantive or procedural, enforceable at law by any party against the United States, its agencies, its officers, or any person.

In accordance with paragraph III.B.4 of the Internal Organization and Operating Procedures of the JSC, the committee also invites members of the public to suggest changes to the manual for Courts-Martial in accordance with the described format.

DATES: Comments on the proposed changes must be received no later than November 15, 2004 to be assured consideration by the JSC. A public meeting will be held on October 15, 2004 at 11 a.m. in Room 808, 1501 Wilson Boulevard, Rosslyn, VA 22209–2403.

ADDRESSES: Comments on the proposed changes should be sent to Lieutenant Commander James Carsten, Office of the Judge Advocate General, 716 Sicard St. SE, Suite 1000, Washington,DC 20374–5047.

FOR FURTHER INFORMATION CONTACT: Lieutenant Commander James Carsten, Executive Secretary, Joint Service Committee on Military Justice, Office of the Judge Advocate General, 716 Sicard St. SE., Suite 1000, Washington, DC 20374–5047, (202) 685–7298, (202) 685–7687 fax.

SUPPLEMENTARY INFORMATION: The proposed amendments to the MCM are as follows:

Amend RCM 703(b)(1) by inserting the following three sentences after the last sentence in RCM 703(b)(1):

With the consent of both the accused and Government, the military judge may authorize any witness to testify via remote means. Over a party's objection, the military judge may authorize any witness to testify on interlocutory questions via remote means or similar technology if the practical difficulties of producing the witness outweigh the significance of the witness' personal appearance. Factors to be considered include, but are not limited to the costs of producing the witness, the timing of the request for production of the witness, the potential delay in the interlocutory proceeding that may be caused by the production of the witness, the willingness of the witness to testify in person, and the likelihood of significant interference with military operational deployment, mission accomplishment, or essential training, and for child witnesses the traumatic effect of providing in-court testimony.

Add a new paragraph to the end of the Discussion which follows R.C.M. (b)(1) that reads:

The procedures for receiving testimony via remote means and the definition thereof are contained in R.C.M. 914B.

Amend the Analysis accompanying R.C.M. 703(b) by inserting the following paragraph:

''200__Amendment: Subsection (b)(1) was amended to allow, under certain circumstances, the utilization of various types of remote testimony in lieu of the personal appearance of the witness.''

Amend the discussion to R.C.M. 802 by amending the last sentence of the discussion to read:

A conference may be conducted by remote means or similar technology consistent with the definition in R.C.M. 914B.

Amend R.C.M. 804(c)(2) to read:

(2) Procedure. The accused's absence will be conditional upon his being able to view the witness' testimony from a remote location. Normally, transmission of the testimony will include a system which will transmit the accused's image and voice into the courtroom from a remote location as well as transmission of the child's testimony from the courtroom to the accused's location. A one-way transmission may be used if deemed necessary by the military judge. The accused will also be provided private, contemporaneous communication with his counsel. The procedures described herein shall be employed unless the accused has made a knowing and affirmative waiver of these procedures.

Amend the Analysis accompanying R.C.M. 804(c) by inserting the following paragraph:

''200__Amendment: The specific terminology of the manner in which remote live testimony may be transmitted was deleted to allow for technological advances in the methods used to transmit audio and visual information.''

Amend RCM 914A by deleting the third sentence of paragraph (a), which read ''However, such testimony should normally be taken via a two-way closed circuit television system'' leaving the remaining paragraph which reads:

(a) General procedures. A child shall be allowed to testify out of the presence of the accused after the military judge has determined that the requirements of Mil. R. Evid. 611 (d)(3) have been satisfied. The procedure used to take such testimony will be determined by the military judge based upon the exigencies of the situation. At a minimum, the following procedures shall be observed:

Amend RCM 914A by re-lettering current paragraph ''(b)'' to paragraph ''(c)'' and inserting new paragraph (b) which will read:

(b) Definition. As used in this rule, ''remote live testimony'' includes, but is not limited to, testimony by video-teleconference, closed circuit television, or similar technology.

Add a discussion section that reads:

For purposes of this rule, unlike R.C.M. 914B, remote means or similar technology does not include receiving testimony by telephone where the parties cannot see and hear each other.

Amend the Analysis accompanying R.C.M. 914A by inserting the following paragraph:

''200__Amendment: The rule was amend to allow for technological advances in the methods used to transmit audio and visual information.''

Add new Rule R.C.M. 914B, which will read:

Rule 914B. Use of Remote Testimony

(a) *General procedures.* The military judge shall determine the procedure used to take testimony via remote means. At a minimum, all parties shall be able to hear each other, those in attendance at the remote site shall be identified, and the accused shall be permitted private, contemporaneous communication with his counsel.

(b) *Definition.* As used in this rule, testimony via ''remote means'' includes, but is not limited to, testimony by video-teleconference, closed circuit television, telephone, or similar technology.

Discussion

This rule applies for all witness testimony other than child witness testimony specifically covered by M.R.E. 611(d) and R.C.M. 914A. When utilizing testimony via remote means, military justice practitioners are encouraged to consult the procedure

used in *In re San Juan Dupont Plaza Hotel Fire Litigation*, 129 F.R.D. 424 (D.P.R. 1989) and to read *United States* v. Shabazz, 52 M.J. 585 (N.M.Ct. Crim. App. 1999); and *United States* v. *Gigante*, 166 F.3d 75 (2d Cir. 1999), cert denied, 528 U.S. 1114 (2000).

Add a new analysis section for R.C.M. 914B by inserting the following title and paragraph:

Rule 914B. Use of Remote Testimony

200__Amendment: This rule describes the basic procedures that will be used when testimony of any witnesses, other than child witnesses pursuant to R.C.M. 914A, is received via remote means.''

Amend R.C.M. 1001(e)(2)(D) by deleting the ''or'' before ''former testimony'' and inserting '', or testimony by remote means'' after ''former testimony'' so the paragraph reads as follows:

(D) Other forms of evidence, such as oral depositions, written interrogatories, former testimony, or testimony by remote means would not be sufficient to meet the needs of the court-martial in the determination of an appropriate sentence; and

Add new Discussion paragraph immediately following R.C.M. 1001 (e)(2)(E) which will read:

The procedures for receiving testimony via remote means and the definition thereof are contained in R.C.M. 914B.

Amend the Analysis accompanying R.C.M. 1001(e) by inserting the following paragraph:

''200__Amendment: Subsection (e)(2)(D) was amended to allow the availability of various types of remote testimony to be a factor to consider in whether a presentencing witness must be physically produced.''

Amend Part IV, Punitive Articles, paragraph 4(c)(6) by inserting the following new subparagraph (f) and redesignating the existing subparagraph (f) as (g):

''(f) Article 119a–attempting to kill an unborn child''

Amend Appendix 23, Analysis of Punitive Articles

''200__Amendment: In 4(c)(6), subparagraph (f) was redesignated as subparagraph (g) and a new subparagraph (f) was added to reflect the offense of attempting to kill an unborn child as established by the Unborn Victims of Violence Act of 2004, Pub. L. No. 108–212, § 3, ____ Stat., _____ (2004) (art.119a).

Amend Part IV, Punitive Articles, by inserting the new paragraph 44a to read:

44a. Article 119a—Death or Injury of an Unborn Child

a. Text

''(a)(1) Any person subject to this chapter who engages in conduct that violates any of the provisions of law listed in subsection (b) and thereby causes the death of, or bodily injury (as defined in section 1365 of title 18) to, a child, who is in utero at the time the conduct takes place, is guilty of a separate offense under this section and shall, upon conviction, be punished by such punishment, other than death, as a court-martial may direct, which shall be consistent with the punishments prescribed by the President for that conduct had that injury or death occurred to the unborn child's mother.

(2) An offense under this section does not require proof that—

(i) The person engaging in the conduct had knowledge or should have had knowledge that the victim of the underlying offense was pregnant; or

(ii) The accused intended to cause the death of, or bodily injury to, the unborn child.

(3) If the person engaging in the conduct thereby intentionally kills or attempts to kill the unborn child, that person shall, instead of being punished under paragraph (1), be punished as provided under sections 880, 918, and 919(a) of this title (articles 80, 118, and 119(a)) for intentionally killing or attempting to kill a human being.

(4) Notwithstanding any other provision of law, the death penalty shall not be imposed for an offense under this section.

(b) The provisions referred to in subsection (a) are sections 918, 919(a), 919(b)(2), 920(a), 922, 924, 926, and 928 of this title (articles 118, 119(a), 119(b)(2), 120(a), 122, 124, 126, and 128).

(c) Nothing in this section shall be construed to permit the prosecution—

(1) Of any person for conduct relating to an abortion for which the consent of the pregnant woman, or a person authorized by law to act on her behalf, has been obtained or for which such consent is implied by law;

(2) Of any person for any medical treatment of the pregnant woman or her unborn child; or

(3) Of any woman with respect to her unborn child.

(d) As used in this section, the term 'unborn child' means a child in utero, and the term 'child in utero' or 'child, who is in utero' means a member of the species homo sapiens, at any stage of development, who is carried in the womb.''

b. Elements

(1) Injuring an Unborn Child

(a) That the accused was engaged in the [(murder (article 118)), (voluntary manslaughter (article 119(a))), (involuntary manslaughter (article 119(b)(2))), (rape (article 120)), (robbery (article 122)), (maiming (article 124)), (assault (article 128)), of] or [burning or setting afire, as arson (article 126), of (a dwelling inhabited by) (a structure or property (known to be occupied by) (belonging to))] a woman;

(b) That the woman was then pregnant; and

(c) Thereby cause bodily injury to the unborn child of that woman.

(2) Killing an Unborn Child

(a) That the accused was engaged in the [(murder (article 118)), (voluntary manslaughter (article 119(a))), (involuntary manslaughter (article 119(b)(2))), (rape (article 120)), (robbery (article 122)), (maiming (article 124)), (assault (article 128)), of] or [burning or setting afire, as arson (article 126), of (a dwelling inhabited by) (a structure or property known to (be occupied by) (belong to))] a woman; and

(b) That the woman was then pregnant; and

(c) Thereby caused the death of the unborn child of that woman.

(3) Attempting To Kill an Unborn Child

(a) That the accused was engaged in the [(murder (article 118)), (voluntary manslaughter (article 119(a))), (involuntary manslaughter (article 119(b)(2))), (rape (article 120)), (robbery (article 122)), (maiming (article 124)), (assault (article 128)), of] or [burning or setting afire, as arson (article 126), of (a dwelling inhabited by) (a structure or property (known to be occupied by) belonging to))] a woman; and

(b) That the woman was then pregnant; and

(c) Thereby attempted to kill the unborn child of that woman.

(4) Intentionally Killing an Unborn Child

(a) That the accursed was engaged in the [(murder (article 118)), (voluntary manslaughter (article 119(a))), (involuntary manslaughter (article 119(b)(2))), (rape (article 120)), (robbery (article 122)), (maiming (article 124)), (assault (article 128)), of] or [burning or setting afire, as arson (article 126), of (a dwelling inhabited by) (a structure or property (known to be occupied by) (belonging to))] a woman; and

(b) That the woman was then pregnant; and

(c) Thereby intentionally killed the unborn child of that woman.

c. Explanation

(1) *Nature of offense.* This article makes it a separate, punishable crime to cause the death of or bodily injury to an unborn child while engaged in arson (article 126, UCMJ) murder (article 118, UCMJ); voluntary manslaughter (article 119(a), UCMJ); involuntary manslaughter (article 119(b)(2), UCMJ); rape (article 120(a), UCMJ); robbery (article 122, UCMJ); maiming (article 124, UCMJ); or assault (article 128, UCMJ) against a pregnant woman. For all underlying offenses, except arson, this article requires that the victim of the underlying offense be the pregnant mother. For purposes of arson, the pregnant mother must have some nexus to the arson such that she sustained some ''bodily injury'' due to the arson. This article does not permit the prosecution of any—

(i) Person for conduct relating to an abortion for which the consent of the pregnant woman, or a person authorized by law to act on her behalf, has been obtained or for which such consent is implied by law;

(ii) Person for any medical treatment of the pregnant woman or her unborn child; or

(iii) Woman with respect to her unborn child.

The offenses of ''injuring an unborn child'' and ''killing an unborn child'' do not require proof that—

(i) The person engaging in the conduct (the accused) had knowledge or should have had knowledge that the victim of the underlying offense was pregnant; or

(ii) The accused intended to cause the death of, or bodily injury to, the unborn child.

(2) *Bodily injury.* For the purpose of this offense, the term ''bodily injury'' is that which is provided by 18 U.S.C. § 1365, to wit: A cut, abrasion, bruise, burn, or disfigurement; physical pain; illness; impairment of the function of a bodily member, organ, or mental faculty; or any other injury to the body, no matter how temporary.

(3) *Unborn child.* ''Unborn child'' means a child in utero or a member of the species homo sapiens who is carried in the womb, at any stage of development, from conception to birth.

d. Lesser Included Offenses

(1) Killing an Unborn, Child

(a) Article 119a–injuring an unborn child

(2) Intentionally Killing an Unborn Child

(a) Article 119a–killing an unborn child

(b) Article 119a–injuring an unborn child

(c) Article 119a—attempts (attempting to kill an unborn child)

e. Maximum Punishment

The maximum punishment for (1) Injuring an unborn child; (2) Killing an unborn child; (3) Attempting to kill an unborn child; or (4) Intentionally killing an unborn child is such punishment, other than death, as a court-martial may direct, but shall be consistent with the punishment had the injury, death, attempt to kill or intentional killing occurred to the unborn child's mother.

f. Sample Specifications

(1) Injuring an Unborn Child

In that _____ (personal jurisdiction data), did (at/on board—location), (subject-matter jurisdiction data, if required), on or about _____ 20____, cause bodily injury to the unborn child of _____, a pregnant woman, by engaging in the [(murder) (voluntary manslaughter) (involuntary manslaughter) (rape) (robbery) (maiming) (assault) of] [(burning) (setting afire) of (a dwelling inhabited by) (a structure or property known to (be occupied by) (belong to))] that woman.

(2) Killing an Unborn Child

In that _____ (personal jurisdiction data), did (at/on board—location), (subject-matter jurisdiction data, if required), on or about _____ 20____, cause the death of the unborn child of _____, a pregnant woman, by engaging in the [(murder) (voluntary manslaughter)(involuntary manslaughter) (rape) (robbery) (maiming) (assault) of] [(burning) (setting afire) of (a dwelling inhabited by) (a structure or property known to (be occupied by) (belong to))] that woman.

(3) Attempting to Kill an Unborn Child

In that _____ (personal jurisdiction data), did (at/on board—location), (subject-matter jurisdiction data, if required), on or about _____ 20____, attempt to kill the unborn child of _____, a pregnant woman, by engaging in the [(murder) (voluntary manslaughter) (involuntary manslaughter) (rape) (robbery) (maiming) (assault) of] [(burning) (setting afire) of (a dwelling inhabited by) (a structure or property known to (be occupied by) (belong to))] that woman.

(4) Intentionally Kiling an Unborn Child

In that _____ (personal jurisdication data), did (at/on board—location), (subject-matter jurisdiction data, if required), on or about _____ 20____, intentionally kill the unborn child of _____, a pregnant woman, by engaging in the [(murder) (voluntary manslaughter) (involuntary manslaughter) (rape) (robbery) (maiming) (assault) of] [(burning) (setting afire) of (a dwelling inhabited by) (a structure or property known to (be occupied by) (belong to))] that woman.

Amend Appendix 12, Maximum Punishment Chart by inserting the following before Article 120, rape:

119a Death or Injury of an Unborn Child

Injuring or killing an unborn child Article 119a * * * Such punishment, other than death, as a court-martial may direct but such punishment shall be consistent with the punishment had the bodily injury or death occurred to the unborn child's mother.

Attempting to kill an unborn child Article 119a * * * Such punishment, other than death, as a court-martial may direct but such punishment shall be consistent with the punishment had the attempt been made to kill the unborn child's mother.

Intentional killing of an unborn child Article 119a * * * Such punishment, other than death, as a court-martial may direct but such punishment shall be consistent with the punishment had the killing occurred to the unborn child's mother.

Amend Appendix 23, Analysis of Punitive Articles by adding the following new analysis:

44a. Article 119a—(Death or Injury of an Unborn Child)

c. Explanation. This paragraph is new and is based on Public Law 108–212, 18 U.S.C. § 1841 and 10 U.S.C. § 919a (Unborn Victims of Violence Act of 2004) enacted on 1 April 2004.

Amend paragraph 97, Article 134—(Pandering and prostitution) to add the new offense of patronizing a prostitute. The Article as amended will read:

a. Text—See Paragraph 60

b. Elements

(1) Prostitution

(a) That the accused had sexual intercourse with another person not the accused's spouse;

(b) That the accused did so for the purpose of receiving money or other compensation;

(c) That this act was wrongful; and

(d) That, under the circumstances, the conduct of the accused was to the prejudice of good order and discipline in the armed forces or was of a nature to bring discredit upon the armed forces.

(2) Patronizing a Prostitute

(a) That the accused had sexual intercourse with another person not the accused's spouse;

(b) That the accused compelled, induced, enticed, or procured such person to engage in act of sexual intercourse in exchange for money or other compensation; and

(c) That this act was wrongful; and

(d) That, under the circumstances, the conduct of the accused was to the prejudice of good order and discipline in the armed forces or was of a nature to bring discredit upon the armed forces.

(3) Pandering by Compelling, Inducing, Enticing, or Procuring Act of Prostitution

(a) That the accused compelled, induced, enticed, or procured a certain person to engage in an act of sexual intercourse for hire and reward with a person to be directed to said person by the accused;

(b) That this compelling, inducing, enticing, or procuring was wrongful; and

(c) That, under the circumstances, the conduct of the accused was to the prejudice of good order and discipline in the armed forces or was of a nature to bring discredit upon the armed forces.

(4) Pandering by Arranging or Receiving Consideration for Arranging for Sexual Intercourse or Sodomy

(a) That the accused arranged for, or received valuable consideration for arranging for, a certain person to engage in sexual intercourse or sodomy with another person;

(b) That the arranging (and receipt of consideration) was wrongful; and

(c) That, under the circumstances, the conduct of the accused was to the prejudice of good order and discipline in the armed forces or was of a nature to bring discredit upon the armed forces.

c. Explanation

Prostitution may be committed by males or females. Sodomy for money or compensation is not included in subparagraph b(1). Sodomy may be charged under paragraph 51. Evidence that sodomy was for money or compensation may be a matter in aggravation. See R.C.M. 1001(b)(4).

d. Lesser Included Offense. Article 80-Attempts

e. Maximum Punishment

(1) Prostitution and patronizing a prostitute. Dishonorable discharge, forfeiture of all pay and allowances, and confinement for 1 year.

(2) Pandering. Dishonorable discharge, forfeiture of all pay and allowances, and confinement for 5 years.

f. Sample Specifications

(1) Prostitution

In that____ (personal jurisdiction data), did, (at/on board—location) (subject-matter jurisdiction data, if required), on or about____20____, wrongfully engage in (an act) (acts) of sexual intercourse with____, a person not his/her spouse, for the purpose of receiving (money) (____).

(2) Patronizing a Prostitute

In that ____(personal jurisdiction data), did, (at/on board—location) (subject-matter jurisdiction data, if required), on or about____20____, wrongfully (compel) (induce) (entice) (procure)____, a person not his/her spouse, to engage in (an act) (acts) of sexual intercourse with the accused in exchange for (money) (_____).

(3) Compelling, Inducing, Enticing, or Procuring Act of Prostitution

In that____(personal jurisdiction data), did, (at/on board—location) (subject-matter jurisdiction data, if required), on or about____, 20____, wrongfully (compel) (induce) (entice) (procure) ____ to engage in (an act) (acts) of (sexual intercourse for hire and reward with persons to be directed to him/her by the said ____.

(4) Arranging, or Receiving Consideration for Arranging for Sexual Intercourse or Sodomy

In that____ (personal jurisdiction data), did, (at/on board—location) (subject-matter jurisdiction data, if required), on or about____ 20 ____, wrongfully (arrange for) (receive valuable consideration, to wit: ____ on account of arranging for-) ____ to engage in (an act) (acts) of sexual intercourse) (sodomy) with ____.

Amend Appendix 12, Maximum Punishment Chart by substituting ''Prostitution and patronizing a prostitute'' for ''Prostitution.''

Amend appendix 23, Analysis of Punitive Articles by amending the Analysis accompanying paragraph 97 by adding the following:

''200_ Amendment: b. Elements. Subparagraph (2) defines the elements of the offense of patronizing a prostitute. Old subparagraphs (2) and (3) are now (3) and (4) respectively.''

Dated: September 9, 2004

L.M. Bynum,

Alternate OSD Federal Register Liaison Officer, Department of Defense.

[FR Doc. 04–20723 Filed 9–14–04; 8:45 am]

BILLING CODE 5001–06–M

DEPARTMENT OF DEFENSE

Office of the Secretary

Defense Science Board

AGENCY: Department of Defense.

ACTION: Notice of Advisory Committee meeting date change.

SUMMARY: On Wednesday, August 28, 2004 (69 FR 52240) the Department of Defense announced closed meetings of the Defense Science Board (DSB) Task Force on Munitions System Reliability. These meetings have been rescheduled from September 21–22, 2004, to September 23–24, 2004. The meetings will be held at SAIC., 4001 N. Fairfax Drive, Arlington, VA.

Dated: September 9, 2004.

L.M. Bynum,

Alternate OSD Federal Register Liaison Officer, Department of Defense.

[FR Doc. 04–20724 Filed 9–14–04; 8:45 am]

BILLING CODE 5001–06–M

DEPARTMENT OF DEFENSE

United States Marine Corps

Privacy Act of 1974; System of Records

AGENCY: United States Marine Corps, DoD.

ACTION: Notice to delete a records system.

SUMMARY: The U.S. Marine Corps (USMC) is deleting one system of records notice from its inventory of records systems subject to the Privacy Act of 1974, as amended (5 U.S.C. 552a).

DATES: The deletion will be effective on October 15, 2004 unless comments are received that would result in a contrary determination.

ADDRESSES: Send comments to Headquarters, U.S. Marine Corps, FOIA/PA Section (CMC–ARSE), 2 Navy Annex, Room 1005, Washington, DC 20380–1775.

FOR FURTHER INFORMATION CONTACT: Ms. Tracy D. Ross at (703) 614–4008.

SUPPLEMENTARY INFORMATION: The U.S. Marine Corps' records system notices for records systems subject to the Privacy Act of 1974 (5 U.S.C. 552a), as amended, have been published in the

Federal Register and are available from the address above.

The U.S. Marine Corps proposes to delete a system of records notice from its inventory of record systems subject to the Privacy Act of 1974 (5 U.S.C. 552a), as amended. the deletion is not within the purview of subsection (r) of the Privacy Act of 1974 (5 U.S.C. 552a), as amended, which requires the submission of new altered systems reports.

Dated: September 8, 2004.

L.M. Bynum,

Alternate OSD Federal Register Liaison Officer, Department of Defense.

MFD00009

SYSTEM NAME:

Pay Vouchers for Marine Corps Junior Reserve Officer Training Course Instructors (February 22, 1993, 58 FR 10630).

REASON:

Records are now under the cognizance of the Defense Finance and Accounting Service (DFAS) and are being maintained under the DFAS Privacy Act system of records notice T1205, entitled ''Junior Reserve Officer Training Corps Payment Reimbursement System''.

[FR Doc. 04–20726 Filed 9–14–04; 8:45 am]

BILLING CODE 5001–06–M

ENVIRONMENTAL PROTECTION AGENCY

[OPP–2004–0275; FRL–7675–7]

Bacillus thuringiensis VIP3A Insect Control Protein and the Genetic Material Necessary for its Production; Notice of Filing to a Pesticide Petition to Amend the Exemption from the Requirement of a Tolerance for a Certain Pesticide Chemical in or on Food

AGENCY: Environmental Protection Agency (EPA).

ACTION: Notice.

SUMMARY: This notice announces the initial filing of a pesticide petition proposing the establishment of regulations for residues of a certain pesticide chemical in or on various food commodities.

DATES: Comments, entified by docket identification (ID) number OPP–2004–0275, must be received on or before October 15, 2004.

ADDRESSES: Comments may be submitted electronically, by mail, or through hand delivery/courier. Follow the detailed instructions as provided in Unit I. of the **SUPPLEMENTARY INFORMATION**.

FOR FURTHER INFORMATION CONTACT: Leonard Cole, Biopesticides and Pollution Prevention Division (7511C), Office of Pesticide Programs, Environmental Protection Agency, 1200 Pennsylvania Ave., NW., Washington, DC 20460–0001; telephone number: (703) 305–5412; e-mail address: *cole.leonard@epa.gov*.

SUPPLEMENTARY INFORMATION:

I. General Information

A. Does this Action Apply to Me?

You may be potentially affected by this action if you those persons who are interested in agricultural biotechnology or may be required to conduct testing of chemical substances under the Federal Food, Drug, and Cosmetic Act (FFDCA), or the Federal Insecticide, Fungicide, and Rodenticide Act (FIFRA) Potentially affected entities may include, but are not limited to:

- Crop production (NAICS 111)
- Animal production (NAICS 112)
- Food manufacturing (NAICS 311)
- Pesticide manufacturing (NAICS 32532)

This listing is not intended to be exhaustive, but rather provides a guide for readers regarding entities likely to be affected by this action. Other types of entities not listed in this unit could also be affected. The North American Industrial Classification System (NAICS) codes have been provided to assist you and others in determining whether this action might apply to certain entities. If you have any questions regarding the applicability of this action to a particular entity, consult the person listed under **FOR FURTHER INFORMATION CONTACT**.

B. How Can I Get Copies of this Document and Other Related Information?

1. *Docket*. EPA has established an official public docket for this action under docket identification (ID) number OPP–2004–0275. The official public docket consists of the documents specifically referenced in this action, any public comments received, and other information related to this action. Although a part of the official docket, the public docket does not include Confidential Business Information (CBI) or other information whose disclosure is restricted by statute. The official public docket is the collection of materials that is available for public viewing at the Public Information and Records Integrity Branch (PIRIB), Rm. 119, Crystal Mall #2, 1801 South Bell St., Arlington, VA. This docket facility is open from 8:30 a.m. to 4 p.m., Monday through Friday, excluding legal holidays. The docket telephone number is (703) 305–5805.

2. *Electronic access*. You may access this **Federal Register** document electronically through the EPA Internet under the ''**Federal Register**'' listings at *http://www.epa.gov/fedrgstr/*.

An electronic version of the public docket is available through EPA's electronic public docket and comment system, EPA Dockets. You may use EPA Dockets at *http://www.epa.gov/edocket/* to submit or view public comments, access the index listing of the contents of the official public docket, and to access those documents in the public docket that are available electronically. Although not all docket materials may be available electronically, you may still access any of the publicly available docket materials through the docket facility identified in Unit I.B.1. Once in the system, select ''search,'' then key in the appropriate docket ID number.

Certain types of information will not be placed in the EPA Dockets. Information claimed as CBI and other information whose disclosure is restricted by statute, which is not included in the official public docket, will not be available for public viewing in EPA's electronic public docket. EPA's policy is that copyrighted material will not be placed in EPA's electronic public docket but will be available only in printed, paper form in the official public docket. To the extent feasible, publicly available docket materials will be made available in EPA's electronic public docket. When a document is selected from the index list in EPA Dockets, the system will identify whether the document is available for viewing in EPA's electronic public docket. Although not all docket materials may be available electronically, you may still access any of the publicly available docket materials through the docket facility identified in Unit I.B.1. EPA intends to work towards providing electronic access to all of the publicly available docket materials through EPA's electronic public docket.

For public commenters, it is important to note that EPA's policy is that public comments, whether submitted electronically or in paper, will be made available for public viewing in EPA's electronic public docket as EPA receives them and without change, unless the comment contains copyrighted material, CBI, or other information whose disclosure is restricted by statute. When EPA identifies a comment containing copyrighted material, EPA will provide

a reference to that material in the version of the comment that is placed in EPA's electronic public docket. The entire printed comment, including the copyrighted material, will be available in the public docket.

Public comments submitted on computer disks that are mailed or delivered to the docket will be transferred to EPA's electronic public docket. Public comments that are mailed or delivered to the docket will be scanned and placed in EPA's electronic public docket. Where practical, physical objects will be photographed, and the photograph will be placed in EPA's electronic public docket along with a brief description written by the docket staff.

C. How and To Whom Do I Submit Comments?

You may submit comments electronically, by mail, or through hand delivery/courier. To ensure proper receipt by EPA, identify the appropriate docket ID number in the subject line on the first page of your comment. Please ensure that your comments are submitted within the specified comment period. Comments received after the close of the comment period will be marked ''late.'' EPA is not required to consider these late comments. If you wish to submit CBI or information that is otherwise protected by statute, please follow the instructions in Unit I.D. Do not use EPA Dockets or e-mail to submit CBI or information protected by statute.

1. *Electronically*. If you submit an electronic comment as prescribed in this unit, EPA recommends that you include your name, mailing address, and an e-mail address or other contact information in the body of your comment. Also include this contact information on the outside of any disk or CD ROM you submit, and in any cover letter accompanying the disk or CD ROM. This ensures that you can be identified as the submitter of the comment and allows EPA to contact you in case EPA cannot read your comment due to technical difficulties or needs further information on the substance of your comment. EPA's policy is that EPA will not edit your comment, and any identifying or contact information provided in the body of a comment will be included as part of the comment that is placed in the official public docket, and made available in EPA's electronic public docket. If EPA cannot read your comment due to technical difficulties and cannot contact you for clarification, EPA may not be able to consider your comment.

i. *EPA Dockets*. Your use of EPA's electronic public docket to submit comments to EPA electronically is EPA's preferred method for receiving comments. Go directly to EPA Dockets at *http://www.epa.gov/edocket/*, and follow the online instructions for submitting comments. Once in the system, select ''search,'' and then key in docket ID number OPP–2004–0275. The system is an ''anonymous access'' system, which means EPA will not know your identity, e-mail address, or other contact information unless you provide it in the body of your comment.

ii. *E-mail*. Comments may be sent by e-mail to *opp-docket@epa.gov*, Attention: Docket ID Number OPP–2004–0275. In contrast to EPA's electronic public docket, EPA's e-mail system is not an ''anonymous access'' system. If you send an e-mail comment directly to the docket without going through EPA's electronic public docket, EPA's e-mail system automatically captures your e-mail address. E-mail addresses that are automatically captured by EPA's e-mail system are included as part of the comment that is placed in the official public docket, and made available in EPA's electronic public docket.

iii. *Disk or CD ROM*. You may submit comments on a disk or CD ROM that you mail to the mailing address identified in Unit I.C.2. These electronic submissions will be accepted in WordPerfect or ASCII file format. Avoid the use of special characters and any form of encryption.

2. *By mail*. Send your comments to: Public Information and Records Integrity Branch (PIRIB) (7502C), Office of Pesticide Programs (OPP), Environmental Protection Agency, 1200 Pennsylvania Ave., NW., Washington, DC 20460–0001, Attention: Docket ID Number OPP–2004–0275.

3. *By hand delivery or courier*. Deliver your comments to: Public Information and Records Integrity Branch (PIRIB), Office of Pesticide Programs (OPP), Environmental Protection Agency, Rm. 119, Crystal Mall #2, 1801 South Bell St., Arlington, VA, Attention: Docket ID Number OPP–2004–0275. Such deliveries are only accepted during the docket's normal hours of operation as identified in Unit I.B.1.

D. How Should I Submit CBI to the Agency?

Do not submit information that you consider to be CBI electronically through EPA's electronic public docket or by e-mail. You may claim information that you submit to EPA as CBI by marking any part or all of that information as CBI (if you submit CBI on disk or CD ROM, mark the outside of the disk or CD ROM as CBI and then identify electronically within the disk or CD ROM the specific information that is CBI). Information so marked will not be disclosed except in accordance with procedures set forth in 40 CFR part 2.

In addition to one complete version of the comment that includes any information claimed as CBI, a copy of the comment that does not contain the information claimed as CBI must be submitted for inclusion in the public docket and EPA's electronic public docket. If you submit the copy that does not contain CBI on disk or CD ROM, mark the outside of the disk or CD ROM clearly that it does not contain CBI. Information not marked as CBI will be included in the public docket and EPA's electronic public docket without prior notice. If you have any questions about CBI or the procedures for claiming CBI, please consult the person listed under **FOR FURTHER INFORMATION CONTACT**.

E. What Should I Consider as I Prepare My Comments for EPA?

You may find the following suggestions helpful for preparing your comments:

1. Explain your views as clearly as possible.
2. Describe any assumptions that you used.
3. Provide copies of any technical information and/or data you used that support your views.
4. If you estimate potential burden or costs, explain how you arrived at the estimate that you provide.
5. Provide specific examples to illustrate your concerns.
6. Make sure to submit your comments by the deadline in this notice.
7. To ensure proper receipt by EPA, be sure to identify the docket ID number assigned to this action in the subject line on the first page of your response. You may also provide the name, date, and **Federal Register** citation.

II. What Action is the Agency Taking?

EPA has received a pesticide petition as follows proposing the establishment and/or amendment of regulations for residues of a certain pesticide chemical in or on various food commodities under section 408 of the FFDCA, 21 U.S.C. 346a. EPA has determined that this petition contains data or information regarding the elements set forth in FFDCA section 408(d)(2); however, EPA has not fully evaluated the sufficiency of the submitted data at this time or whether the data support granting of the petition. Additional data may be needed before EPA rules on the petition.

List of Subjects

Environmental protection, Agricultural commodities, Feed additives, Food additives, Pesticides and pests, Reporting and recordkeeping requirements.

Dated: August 24, 2004.

Janet L. Andersen,

Director, Biopesticides and Pollution Prevention Division, Office of Pesticide Programs.

Summary of Petition

The petitioner summary of the pesticide petition is printed below as required by FFDCA section 408(d)(3). The summary of the petition was prepared by the petitioner and represents the view of the petitioner. The petition summary announces the availability of a description of the analytical methods available to EPA for the detection and measurement of the pesticide chemical residues or an explanation of why no such method is needed.

Syngenta Seeds

PP 3G6547

EPA has received a pesticide petition, 3G6547, from Syngenta Seeds, 3054 Cornwallis Road, Research Triangle Park, NC 27709–2257 proposing, pursuant to section 408(d) of FFDCA, 21 U.S.C. 346a(d) to amend 40 CFR part 180 by amending an existing exemption from the requirement of a tolerance, to include all VIP3A events. *Bacillus thuringiensis* VIP3A insect control protein is expressed as a plant-incorporated protectant in transgenic cotton plants to provide protection from key lepidopteran pests including, but not limited to, *Helicoverpa zea* (cotton bollworm), *Heliothis virescens* (tobacco budworm), and *Pectinophora gossypiella* (pink bollworm).

Pursuant to section 408(d)(2)(A)(i) of the FFDCA, as amended, Syngenta Seeds has submitted the following informmation, data, and arguments in support of their pesticide petition. This summary was prepared by Syngenta Seeds and EPA has not fully evaluated the merits of the pesticide petition. The summary may have been edited by EPA if the terminology used was unclear, the summary contained extraneous material, or the summary unintentionally made the reader conclude that the findings reflected EPA's position and not the position of the petitioner.

A. Product name and Proposed Use Practices

VIP3A is one of a novel class of recently discovered insecticidal proteins that occur naturally in *Bacillus thuringiensis* (Bt). The VIPs (vegetative insecticidal proteins) are produced during vegetative bacterial growth. Other than its demonstrated insecticidal activity, VIP3A is not known to have any other biological or catalytic function. Although VIP3A protein shares no homology with known Bt Cry proteins, extensive testing has established that VIP3A is similarly very specific in its activity, and has demonstrated toxicity only to the larvae of certain lepidopteran species, including key pests of cotton. Further, because VIP3A appears to target a different receptor than Cry proteins in sensitive species, it represents a potentially useful tool in the prevention or management of pest resistance to Cry proteins.

Upon commercial introduction, the use of transgenic VIP3A cotton plants is expected to offer an important new option in lepidopteran pest control and integrated pest management programs. Moreover, VIP3A cotton will be an attractive, biologically based alternative to the use of foliar insecticides. The use of VIP3A cotton plants is expected to offer substantial environmental and worker safety benefits associated with the reduced need for broad-spectrum insecticides. Additionally, benefits to cotton growers will likely include greater profitability, convenience and predictability in producing a high-yielding cotton crop.

B. Product Identity/Chemistry

1. *Identity of the pesticide and corresponding residues.* The VIPA(a) gene expressed in VIP3A cotton encodes a protein that is identical to that encoded by the native VIP3A(a) gene originally isolated from Bt strain AB88, with the exception of a single amino acid difference at position 284; the native Bt gene encodes lysine, whereas the synthetic gene in VIP3A cotton encodes glutamine at this position. Research has demonstrated the specific insecticidal properties of VIP3A to certain lepidopteran insects as well as its lack of effects on nontarget organisms such as mammals, birds, fish, and beneficial insects.

2. *Magnitude of residue at the time of harvest and method used to determine the residue.* A determination of the magnitude of residue at harvest is not required for residues exempt from tolerances.

3. *A statement of why an analytical method for detecting and measuring the levels of the pesticide residue are not needed.* An analytical method is not required because this petition requests an exemption from tolerances. However, the petitioner has submitted a validated analytical method for detection of the VIP3A protein in cottonseed.

C. Mammalian Toxicological Profile

The VIP3A(a) gene expressed in cotton is very similar (ca. 99% homology) to VIP3A or VIP3A-like genes that appear to occur commonly in Bt strains from a variety of sources. It has been determined that the VIP3A protein demonstrates insect-specific toxicity and must be ingested and processed by a sensitive lepidopteran larval insect to be active. Once in the insect gut, the activated VIP3A protein binds to specific receptors (different from those bound by Bt Cry1A proteins), inserts into the gut membrane and forms ion-specific pores. The resulting ion imbalances cause death of the insect. However, the mode of action of VIP3A in sensitive insects is not relevant to humans and most other organisms, because they lack gut receptors that recognize the VIP3A protein. The mammalian safety of VIP3A has been confirmed in numerous studies conducted in laboratory animals, which are traditional experimental surrogates for humans. These studies, summarized herein, demonstrate the lack of toxicity of the VIP3A protein following high-dose acute oral exposures to mice, rapid degradation of VIP3A upon exposure to simulated mammalian gastric fluid; instability of the VIP3A protein upon heating; and the lack of amino acid sequence similarity of the VIP3A protein to proteins known to be mammalian toxins or human allergens. It can be concluded from these studies that the VIP3A protein will be non-toxic to humans.

When proteins are toxic, they are known to act via acute mechanisms and at very low doses (Sjoblad, R.D., J.T. McClintock and R. Engler (1992) Toxicological considerations for protein components of biological pesticide products. *Regulatory Toxicol. Pharmacol.* 15: 3-9). Therefore, when a protein demonstrates no acute oral toxicity in high-dose testing using a standard laboratory mammalian test species, this supports the determination that the protein will be non-toxic to humans and other mammals, and will not present a hazard under any realistic exposure scenario, including long-term exposures.

Studies conducted to assess the mammalian safety of VIP3A protein have demonstrated no toxicity. Four acute oral toxicity studies in mice have been completed. Three of the VIP3A test substances used were produced via microbial expression systems and one was prepared by extracting protein from

leaves of VIP3A-expressing corn plants. Two of the test substances contained the exact same VIP3A protein as is expressed in VIP3A cotton; the remaining two test substances contained VIP3A protein that differed from the VIP3A protein expressed in cotton by one or two amino acids (out of a total of 789). At maximum dosage the microbially expressed test substance was administered at a level of 5,000 milligrams/kilogram (mg/kg) body weight, representing 3,675 mg of pure VIP3A protein per kg body weight. Because toxicity was not observed at this dose, it can be concluded that the lethal dose $(LD)_{50}$ for pure VIP3A protein is >3,675 mg/kg body weight. The VIP3A protein in both the microbial and plant-derived test substances were determined to be substantially equivalent to VIP3A produced in cotton plants, as measured by biological activity, protein size, immunoreactivity, mass spectral analysis of amino acid sequence, and apparent lack of post-translational modifications. Nucleotide sequencing of the entire DNA insert in VIP3A cotton plants also confirmed that the VIP3A protein encoded therein has the intended amino acid sequence. These data justify the use of VIP3A test substances as surrogates for VIP3A protein as produced in transgenic cotton plants.

The amino acid sequence of VIP3A is not homologous to that of any known or putative allergens described in public databases. The VIP3A protein is not derived from a known source of allergens and does not display characteristics commonly associated with allergens, including glycosylation or stability to heat and food processing. Additionally, VIP3A is susceptible to gastric digestion by pepsin and did not provoke an allergic response in an experimental atopic dog model of human food allergy.

VIP3A or VIP3A-like proteins appear to be present in multiple commercial formulations of *Bacillus thuringiensis* (Bt) microbial insecticides at concentrations estimated to be ca. 0.4 - 32 ppm. This conclusion is based on the presence of proteins of the appropriate molecular weight and immunoreactivity (by SDS-PAGE and western blot), and quantitation by ELISA. Therefore, it is conceivable that small quantities of VIP3A protein are present in the food supply because VIP3A (or a very similar protein, based on size and immunoreactivity) appears to be present in currently registered insecticide products used on food crops, including fresh market produce. These commercial Bt products are all exempt from food and feed tolerances.

The genetic material (i.e., the nucleic acids DNA and RNA), including regulatory regions, necessary for the production of VIP3A protein in cotton will not present a dietary safety concern. ''Regulatory regions'' are the DNA sequences such as promoters, terminators and enhancers that control the expression of the genetic material encoding the protein. Based on the ubiquitous occurrence and established safety of nucleic acids in the food supply, a tolerance exemption has been established for residues of nucleic acids that are part of plant-incorporated protectants (40 CFR part 174.475). Therefore, no toxicity is anticipated from dietary exposure to the genetic material necessary for the production of VIP3A protein in cotton.

D. Aggregate Exposure

1. *Dietary exposure*—i. *Food*. Food products derived from cotton (refined cottonseed oil and cellulose ''linters'' fiber) are highly processed and are essentially devoid of any proteins. Little or no human dietary exposure to VIP3A protein is expected to occur via VIP3A cotton. However, even if exposure were to occur by this route, no risk would be expected because the VIP3A protein is not toxic to mammals.

ii.*Drinking water.* No exposure to VIP3A and the genetic material necessary for its production in cotton via drinking water is expected. The proteins are incorporated into the plant and will not be available. However, if exposure were to occur by this route, no risk would be expected because the VIP3A protein is not toxic to mammals.

2. *Non-dietary exposure*. Non-dietary exposure is not anticipated, due to the proposed use pattern of the product. Exposure via dermal or inhalation routes is unlikely because the plant-incorporated protectant is contained within plant cells. However, if exposure were to occur by non-dietary routes, no risk would be expected because the VIP3A protein is not toxic to mammals.

E. Cumulative Exposure

Because there is no indication of mammalian toxicity to the VIP3A protein, it is reasonable to conclude that there are no cumulative effects for this plant-incorporated protectant.

F. Safety Determination

1.*U.S. population*. The lack of mammalian toxicity at high levels of exposure to the VIP3A protein demonstrates the safety of the product at levels well above possible maximum exposure levels anticipated via consumption of processed food products produced from VIP3A cotton. Moreover, little to no human dietary exposure to VIP3A protein is expected to occur via VIP3A cotton. Due to the digestibility and lack of toxicity of the VIP3A protein and its very low potential for allergenicity, dietary exposure is not anticipated to pose any harm for the U.S. population. No special safety provisions are applicable for consumption patterns or for any population sub-groups.

2. *Infants and children*. Based on the mammalian safety profile of the active ingredient and the proposed use pattern, there is ample evidence to conclude a reasonable certainty of no harm to infants and children. Thus, there are no threshold effects of concern and, consequently, there is no need to apply an additional margin of safety.

G. Effects on the Immune and Endocrine Systems

The safety data submitted show no adverse effects in mammals, even at very high dose levels, and support the prediction that the VIP3A protein would be non-toxic to humans. Therefore no effects on the immune or endocrine systems are predicted. Further, the VIP3A protein is derived from a source that is not known to exert an influence on the endocrine system.

H. Existing Tolerances

A time-limited exemption from the requirement of a tolerance was granted by EPA in the *Federal Register* of March 31, 2004 (69 FR 16806) (FRL–7350–8) for the *Bacillus thuringiensis* VIP3A protein and the genetic material necessary for its production in cotton event COT102 (40 CFR 180.1247). The VIP3A protein expressed in other cotton events (such as COT202 and COT203) is equivalent, and likely identical, to that protein expressed in event COT102.

I. International Tolerances

There are no existing international tolerances or exemptions from tolerance for the *Bacillus thuringiensis* VIP3A protein and the genetic material necessary for its production.

[FR Doc. 04–20681 Filed 9–14–04; 8:45 am]

BILLING CODE 6560–50–S

DEPARTMENT OF ENERGY

Federal Energy Regulatory Commission

[Docket Nos. CP04–395–000, CP04–405–000, CP04–406–000, and CP04–407–000]

Vista del Sol LNG Terminal, L.P.; Vista del Sol Pipeline, L.P.; Notice of Applications

September 8, 2004.

Take notice that on August 10, 2004, Vista del Sol LNG Terminal, L.P. (Vista del Sol LNG) filed an application seeking authorization to site, construct, and operate a liquefied natural gas (LNG) terminal with a send-out capacity of 1.1 Bcf/day to be located near Ingleside, Texas. The LNG terminal will provide LNG tanker terminal services to third party shippers who would be importing LNG. Vista del Sol LNG made the request to site, construct and operate the LNG terminal pursuant to section 3(a) of the Natural Gas Act and Part 153 of the Commission's regulations.

Also take notice that on August 27, 2004, Vista del Sol Pipeline, L.P. (Vista del Sol Pipeline) filed an application seeking a certificate of public convenience and necessity, pursuant to section 7(c) of the NGA and Part 157, Subpart A of the Commission's Regulations, to construct and operate a 25 mile, 36-inch diameter pipeline and related facilities in San Patricio County, Texas, to transport up to 1.4 Bcf/day of natural gas on an open access basis (Docket No. CP04–405–000). Vista del Sol Pipeline is an affiliate of Vista del Sol LNG. Also, in Docket No. CP04–406–000, Vista del Sol Pipeline requests a blanket certificate under section 7(c) of the NGA and Part 157, Subpart F of the Commission's regulations to perform routine activities in connection with the future construction, operation and maintenance of the proposed 25 mile pipeline. Finally, Cheniere Sabine requested authorization in Docket No. CP04–407–000 to provide the natural gas transportation services on a firm and interruptible basis pursuant to section 7(c) of the NGA and Part 284 of the Commission's Regulations.

These applications are on file with the Commission and open to public inspection. These filings are available for review at the Commission in the Public Reference Room or may be viewed on the Commission's website at *http://www.ferc.gov* using the ''eLibrary'' link. Enter the docket number excluding the last three digits in the docket number field to access the document. For assistance, please contact FERC Online Support at *FERCOnlineSupport@ferc.gov* or toll free at (866) 208–3676, or for TTY, contact (202) 502–8659.

In Docket No. PF04–3–000, Vista del Sol LNG and Vista del Sol Pipeline participated in a pre-filing National Environmental Policy Act review of its proposed project to identify and resolve potential landowner and environmental problems before the application was filed.

Any initial questions regarding these applications should be directed to James K. Hanrahan, ExxonMobil Gas & Power Marketing Company, 800 Bell Street, Room 3605M, Houston, Texas, 77002–2180 at (713) 656–8602 or by fax at (713) 656–2388 or Kevin M. Sweeney, John & Hengerer, 1200 17th Street, NW., Suite 600, Washington, DC, 20036 at (202) 429–8802 or by fax at (202) 429–8805.

There are two ways to become involved in the Commission's review of this project. First, any person wishing to obtain legal status by becoming a party to the proceedings for this project should, on or before the below listed comment date, file with the Federal Energy Regulatory Commission, 888 First Street, NE., Washington, DC 20426, a motion to intervene in accordance with the requirements of the Commission's Rules of Practice and Procedure (18 CFR 385.214 or 385.211) and the Regulations under the NGA (18 CFR 157.10). A person obtaining party status will be placed on the service list maintained by the Secretary of the Commission and will receive copies of all documents filed by the applicant and by all other parties. A party must submit 14 copies of filings made with the Commission and must mail a copy to the applicant and to every other party in the proceeding. Only parties to the proceeding can ask for court review of Commission orders in the proceeding.

However, a person does not have to intervene in order to have comments considered. The second way to participate is by filing with the Secretary of the Commission, as soon as possible, an original and two copies of comments in support of or in opposition to this project. The Commission will consider these comments in determining the appropriate action to be taken, but the filing of a comment alone will not serve to make the filer a party to the proceeding. The Commission's rules require that persons filing comments in opposition to the project provide copies of their protests only to the party or parties directly involved in the protest.

Persons who wish to comment only on the environmental review of this project should submit an original and two copies of their comments to the Secretary of the Commission. Environmental commenters will be placed on the Commission's environmental mailing list, will receive copies of the environmental documents, and will be notified of meetings associated with the Commission's environmental review process. Environmental commenters will not be required to serve copies of filed documents on all other parties. However, the non-party commenters will not receive copies of all documents filed by other parties or issued by the Commission (except for the mailing of environmental documents issued by the Commission) and will not have the right to seek court review of the Commission's final order.

Motions to intervene, protests and comments may be filed electronically via the internet in lieu of paper; see, 18 CFR 385.2001(a)(1)(iii) and the instructions on the Commission's web site under the ''e-Filing'' link. The Commission strongly encourages electronic filings.

Comment Date: September 29, 2004.

Magalie R. Salas,

Secretary.

[FR Doc. E4–2191 Filed 9–14–04; 8:45 am]

BILLING CODE 6717–01–P

DEPARTMENT OF ENERGY

Federal Energy Regulatory Commission

[Docket Nos. PL04–15–000, RM02–12–000, RM02–1–001, RM02–1–005]

Interconnection for Wind Energy and Other Alternative Technologies; Standardization of Small Generator Interconnection Agreements and Procedures; Standardizing Generator Interconnection Agreements and Procedures; Supplemental Notice of Technical Conference

September 8, 2004.

In a Notice of Technical Conference issued August 27, 2004, the Federal Energy Regulatory Commission announced that it would host a technical conference on Friday, September 24, 2004 to discuss a petition for rulemaking submitted by the American Wind Energy Association (AWEA) related to the adoption of certain requirements for the interconnection of large wind generators. The AWEA petition is available at: *http://www.ferc.gov/industries/electric/indus-act/gi/wind/AWEA.pdf*.

The purpose of this Supplemental Notice of Technical Conference is to provide more detail to interested

parties, and those who may wish to request to speak, regarding the issues that will be discussed at the Technical Conference.

Commission Staff is interested in speakers who can discuss wind and other technologies that may require special interconnections due to the method in which they add electricity to the grid. Staff has prepared a list of potential topics, questions and issues that may be addressed by speakers at the conference, to aid interested parties and speakers in determining whether they will attend and/or submit a request to speak. While additional items may still be addressed at the conference, the topics, questions and issues Staff has identified to date include:

I. Should There be Special Interconnection Requirements for Wind Generators, or Should These Interconnections be Governed by the Requirements of Order No. 2003 and Order No. 2003–A?

a. How are wind technologies different?

b. What is meant by low voltage ride-through capability? How does it work?

c. Is a low voltage ride-through standard necessary for the interconnection of wind generators? Why or why not?

d. Do intermittent generators need special interconnection requirements?

e. Are wind generators able to provide reactive power? Should they be required to provide reactive power?

f. Should wind generators be exempted from the power factor design criteria set forth in Order No. 2003–A. Yes or No, and discussion of why.

g. Are there other technologies that also need special interconnection requirements like wind? What technologies? Why?

h. Should wind technologies be exempted from having to file the full engineering and system design information at the time of the interconnection request?

i. What is the experience of transmission providers and State regulatory agencies with interconnecting wind and other such technologies?

II. How Should Any Special Interconnection Requirements be Related to the Size of the Wind Facility?

a. Should there be special requirements for large wind farms? For example, should large wind facilities be required to determine SCADA (system control and data acquisition) equipment prior to the interconnection studies?

b. What SCADA information is required?

c. How do these requirements vary with the size of the wind facility?

d. Are any special interconnection requirements also necessary for small (under 20 MW) wind facilities?

III. What, if Any, are the Reliability and Safety Implications of the AWEA Proposal?

IV. Are Special Standards Needed for Wind Interconnection Studies?

a. Are wind and other such technologies properly represented in the current engineering models used in interconnection system impact studies?

b. Is any special generating or system design information or models needed to conduct interconnection studies?

As noted in the earlier notice, the conference will be held at the Commission's Washington, DC headquarters, 888 First St., NE., 20426. The event is scheduled to begin at 10:30 a.m. and end at approximately 4:30 p.m. (Eastern Time) in the Commission Meeting Room, Room 2–C.

The conference is open for the public to attend, and registration is not required; however, in-person attendees are asked to register for the conference on-line by close of business on Wednesday, September 22, 2004 at *http://www.ferc.gov/whats-new/registration/wind-0924-form.asp*.

Parties interested in speaking at the conference should file their requests to speak no later than close of business on September 10, 2004. An on-line form requesting to speak is available at: *http://www.ferc.gov/whats-new/registration/speaker-form.asp*.

Transcripts of the conference will be immediately available from Ace Reporting Company (202–347–3700 or 1–800–336–6646) for a fee. They will be available for the public on the Commission's eLibrary system seven calendar days after FERC receives the transcript. Additionally, Capitol Connection offers the opportunity for remote listening and viewing of the conference. It is available for a fee, live over the Internet, by phone or via satellite. Persons interested in receiving the broadcast, or who need information on making arrangements should contact David Reininger or Julia Morelli at the Capitol Connection (703–993–3100) as soon as possible or visit the Capitol Connection Web site at *http://www.capitolconnection.gmu.edu* and click on ''FERC.''

For more information about the conference, please contact Bruce Poole at 202–502–8468 or at *bruce.poole@ferc.gov*.

Magalie R. Salas,

Secretary.

[FR Doc. E4–2190 Filed 9–14–04; 8:45 am]

BILLING CODE 6717–01–P

ENVIRONMENTAL PROTECTION AGENCY

[OEE 04–03; FRL–7812–9]

Office of Environmental Education; Solicitation Notice, Environmental Education Grants Program (CFDA 66.951), Fiscal Year 2005

Contents

Section I—Funding Opportunity and Overview
Section II—Award Information
Section III—Eligibility of Applicants/Activities
Section IV—Application Requirements and Matching Funds
Section V—Application Review and Selection Process
Section VI—Award Information and Grantee Responsibilities
Section VII—Agency Contacts and Resource Information
Appendices—Federal Forms and Instructions

Section I—Funding Opportunity and Overview

A. Overview

This document solicits grant proposals from education institutions, environmental and educational public agencies, and not-for-profit 501(c)(3) organizations to support environmental education projects that promote environmental stewardship. This grant program provides financial support for projects which design, demonstrate, or disseminate environmental education practices, methods, or techniques as described in this notice. This program is authorized under Section 6 of the National Environmental Education Act of 1990 (the Act) (Public Law 101–619). These grants require non-federal matching funds for at least 25% of the total cost of the project.

This solicitation notice contains all the information and forms necessary to prepare a proposal. If your project is selected as a finalist after the evaluation process is concluded, EPA will provide you with additional Federal forms needed to process your proposal.

Please Note: EPA has traditionally received funding of approximately $3 million annually for this grant program. At the time of issuance of this Solicitation Notice, future funding for the program is uncertain because the federal budget for 2005 is not yet final. However, EPA decided not to miss the annual grant cycle by failing to issue a Solicitation Notice. Since EPA cannot currently anticipate what the appropriation from Congress, if any, will be, we are advising potential grant applicants to refer to our Web site closer to the application deadline to determine the status of funding for the program (*http://www.epa.gov/enviroed*). Any grant awards to be made are subject to Congressional action to appropriate

funds for EPA's Environmental Education Grant Program. EPA reserves the right to reject all proposals and make no awards.

B. Environmental Education versus Environmental Information

Environmental Education: Increases public awareness and knowledge about environmental issues and provides the skills to make informed decisions and take responsible actions. It is based on objective and scientifically sound information. It does not advocate a particular viewpoint or course of action. It teaches individuals how to weigh various sides of an issue through critical thinking and it enhances their own problem-solving and decision making skills.

Environmental Information: Proposals that simply disseminate ''information'' will not be funded. These would be projects that provide facts or opinions about environmental issues or problems, but may not enhance critical-thinking, problem solving or decision-making skills. Although information is an essential element of any educational effort, environmental information is not, by itself, environmental education.

C. Due Date and Grant Schedule

(1) *Due Date*—November 15, 2004 is the *postmark* due date for an original proposal signed by an authorized representative plus two copies to be mailed to EPA. Proposals mailed or sent after this date will not be considered for funding.

(2) *Rejection Letters*—EPA Headquarters and the 10 Regional Offices mail these letters at different times as determined by scheduling to accommodate review teams. Letters are usually sent within 6 months after submission of proposals.

(3) *Start Date and Length of Projects*—July 1, 2005 is the earliest start date that applicants should plan on and enter on their application forms and timelines. Budget periods cannot exceed *one-year* for small grants of $10,000 or less. EPA prefers a one-year budget period for larger grants, but will accept a budget period of up to two-years, if the project timeline clarifies that more than a year is necessary for full implementation of the project.

D. Addresses for Mailing Proposals

Proposals requesting over $50,000 in Federal environmental education grant funds must be mailed to EPA Headquarters in Washington, DC; proposals requesting $50,000 or less from EPA must be mailed to the EPA Regional Office where the project takes place. The Headquarters address and the list of Regional Office mailing addresses by state is included at the end of this notice.

Section II—Award Information

E. Dollar Limits per Proposal

Each year, this program generates a great deal of public enthusiasm for developing environmental education projects. Consequently, EPA receives many more applications for these grants than can be supported with available funds which are approximately $3 million per grant cycle. The competition for grants is intense, especially at Headquarters which usually receives over 200 proposals and is usually able to fund 10 to12 grants or about 5% of the applicants. The EPA Regional Offices receive fewer applications and on average fund over 30% each year.

A large share of the annual funding is distributed through the regional office grants because Congress directs EPA to award small grants to local schools and organizations. By limiting the size of the grants, EPA is able to reach more applicant organizations. In summary, you will significantly increase your chance of being funded if your budget is competitive and you request $10,000 or less from a Regional Office or $100,000 or less from Headquarters. EPA Grants in excess of $100,000 are seldom awarded through this program and proposals for over $150,000 will not be considered.

F. Multiple or Repeat Proposals

An organization may submit more than one proposal if the proposals are for different projects. No organization will be awarded more than one grant for the same project during the same fiscal year. Applicants who received one of these grants in the past may submit a new proposal to expand a previously funded project or to fund an entirely different one. Each new proposal will be evaluated based upon the specific criteria set forth in this solicitation and in relation to the other proposals received in this fiscal year. Due to limited resources, EPA does not generally sustain projects beyond the initial grant period. This grant program is geared toward providing seed money to initiate new projects or to advance existing projects that are ''new'' in some way, such as reaching new audiences or new locations. If you have received a grant from this program in the past, it is essential that you explain how your current proposal is new.

Section III—Eligibility of Applicants and Activities

G. Eligible Applicants

Any local education agency, state education or environmental agency, college or university, not-for-profit organization as described in Section 501(C)(3) of the Internal Revenue Code, or noncommercial educational broadcasting entity may submit a proposal. Applicant organizations must be located in the United States and the majority of the educational activities must take place in the United States, Canada and/or Mexico.

''Tribal education agencies'' which may also apply include a school or community college which is controlled by an Indian tribe, band, or nation, which is recognized as eligible for special programs and services provided by the United States to Indians because of their status as Indians and which is not administered by the Bureau of Indian Affairs. Tribal organizations do not qualify unless they meet this criteria or the not-for-profit criteria listed above. The terms for eligibility are defined in Section 3 of the Act and 40 CFR 47.105.

A teacher's school district, an educator's nonprofit organization, or a faculty member's college or university may apply, but an individual teacher or faculty member may not apply.

H. Restrictions on Curriculum Development

EPA strongly encourages applicants to use and disseminate existing environmental education materials (curricula, training materials, activity books, etc.) rather than designing new materials, because experts indicate that a significant amount of quality educational materials have already been developed and are under-utilized. EPA will consider funding new materials *only* where the applicant demonstrates that there is a need, *e.g.*, that existing educational materials cannot be adapted well to a particular local environmental concern or audience, or existing materials are not otherwise accessible. The applicant must specify what steps they have taken to determine this need, *e.g.*, you may cite a conference where this need was discussed, the results of inquiries made within your community or with various educational institutions, or a research paper or other published document. Further, EPA recommends the use of a publication entitled *Environmental Education Materials: Guidelines for Excellence* which was developed in part with EPA funding. These guidelines contain recommendations for developing and selecting quality environmental

education materials. On our Web site under ''Resources'' you may view these guidelines and find information about ordering copies.

I. Ineligible Activities

Environmental education funds cannot be used for:

(1) Technical training of environmental management professionals;

(2) Environmental ''information'' projects that have no educational component, as described above in Paragraph (B);

(3) Lobbying or political activities, in accordance with OMB Circulars A–21, A–87 and A–122;

(4) Advocacy promoting a particular point of view or course of action;

(5) Non-educational research and development; or

(6) Construction projects—EPA will not fund construction activities such as the acquisition of real property (*e.g.*, buildings) or the construction or modification of any building. EPA may, however, fund activities such as creating a nature trail or building a bird watching station as long as these items are an integral part of the environmental education project, and the cost is a relatively small percentage of the total amount of federal funds requested.

J. Educational Priorities for Funding

All proposals must satisfy the definition of ''environmental education'' specified above in Paragraph (B) and also address one of the following educational priorities. The order of the list is random and does not indicate a ranking. Please read the definitions that are included in this section to prevent your application from being rejected for failure to correctly address a priority.

(1) *Capacity Building:* Increasing capacity to develop and deliver coordinated environmental education programs across a state or across multiple states.

(2) *Education Reform:* Utilizing environmental education as a catalyst to advance state or local education reform goals.

(3) *Community Issues:* Designing and implementing model projects to educate the public about environmental issues and/or health issues in their communities through community-based organizations or through print, film, broadcast, or other media.

(4) *Health:* Educating teachers, students, parents, community leaders, or the public about human-health threats from environmental pollution, especially as it affects children, and how to minimize human exposure to preserve good health.

(5) *Teaching Skills:* Educating teachers, faculty, or nonformal educators about environmental issues to improve their environmental education teaching skills, *e.g.*, through workshops.

(6) *Career Development:* Educating students in formal or nonformal settings about environmental issues to encourage environmental careers.

Definitions: The terms used above and in Section IV are defined as follows:

Environmental Stewardship refers to behavior to protect human health and the environment such as recycling wastes to the greatest extent possible, minimizing or eliminating pollution at its sources, and using energy and natural resources efficiently to reduce impacts on the environment.

Capacity Building is a significant EPA goal, however, many proposals have been rejected for failure to satisfy the scope of this definition. Read this whole paragraph carefully and please note that it requires networking with various types of educational organizations and statewide implementation of educational programs. If your project fails to meet these objectives, please select another educational priority. For purposes of this program ''Capacity Building'' refers to developing effective leaders and organizations that design, implement, and link environmental education programs across a state or states to promote long-term sustainability of the programs. Coordination should involve all major education and environmental education providers including state education and natural resource agencies, schools and school districts, professional education associations, and nonprofit educational and tribal organizations. Effective efforts leverage available resources and decrease fragmentation of effort and duplication across programs. Examples of activities include: identifying and assessing needs and setting priorities; identifying, evaluating and linking programs; developing and implementing strategic plans; identifying funding sources and resources; facilitating communication and networking; promoting sustained professional development; and sponsoring leadership seminars. If existing capacity building efforts are underway in your state please explain how you will support those efforts with your proposal. For an excellent example of a successful project please see *http://www.epa.gov/enviroed* and read the grant profile for the 1999 Ohio Environmental Education Council.

Education Reform refers to state, local, or tribal efforts to improve student academic achievement. Where feasible, collaboration with private sector providers of technology and equipment is recommended. Education reform efforts often focus on changes in curriculum, instruction, assessment or how schools are organized. Curriculum and instructional changes may include inquiry and problem solving, real-world learning experiences, project-based learning, team building and group decision-making, and interdisciplinary study. Assessment changes may include developing content and performance standards and realigning curriculum and instruction to the new standards and new assessments. School site changes may include creating magnet schools or encouraging parental and community involvement. **Note:** All proposals must identify existing educational improvement needs and goals and discuss how the proposed project will address these needs and goals.

Environmental issue is one of importance to the community, state, or region being targeted by the project, *e.g.*, one community may have significant air pollution problems which makes teaching about human health effects from it and solutions to air pollution important, while rapid development in another community may threaten a nearby wildlife habitat, thus making habitat or ecosystem protection a high priority issue.

Partnerships refers to the forming of a collaborative working relationship between two or more organizations such as governmental agencies, not-for-profit organizations, educational institutions, and/or the private sector. It may also refer to intra-organizational unions such as the science and anthropology departments within a university collaborating on a project.

Wide application refers to a project that targets a large and diverse audience in terms of numbers or demographics; or that can serve as a model program elsewhere.

Section IV—Application Requirements and Matching Funds

K. Contents of Proposal and Scoring

In the order listed here, the proposal must contain the following: (1) *Two* standard federal forms; (2) project summary sheet; (3) project description; (4) detailed budget; (5) timeline; (6) description of personnel; and (7) letters of commitment (if you have partner organizations). Please follow the instructions below and do not submit additional items. EPA must make copies of your proposal for use by grant reviewers. Unnecessary cover letters, attachments, divider sheets, forms or binders create a paperwork burden for

the reviewers and failure to follow instructions may lower your score.

Federal Forms: Application for Federal Assistance (SF–424) and Budget Information (SF–424A): These two forms are required for all federal grants and must be submitted on the front of your proposal. The two forms, *along with instructions specific to this program* and examples, are included at the end of this notice. On our Web site these two forms can also be completed and printed off with your data and dollars included. Only finalists will be asked to submit the other federal forms necessary to process a federal grant.

Work Plan and Appendices: A work plan describes your proposed project and your budget. Appendices establish your timeline, your qualifications, and any partnerships with other organizations. Include all five sections described below in the same order in which each is listed. Correct order ensures that reviewers easily evaluate your proposal without overlooking information. Each section is evaluated and scored by reviewers. The highest possible score per proposal is 100 points as outlined below and in Paragraph (N).

(1) *Project Summary:* Provide an overview of your entire project in the following format and on *one page only:*

(a) *Organization:* Describe: (1) Your organization, and (2) list your key partners for this grant, if applicable. Partnerships are encouraged and considered to be a major factor in the success of projects.

(b) *Summary Statement:* Provide an overview of your project that explains the concept and your goals and objectives. This should be a very basic explanation in layman's terms to provide a reviewer with an understanding of the purpose and expected outcomes of your educational project. If a person unfamiliar with your project reads this paragraph and they cannot grasp your basic concept, then you have not achieved what is requested here.

(c) *Educational Priority:* Identify which priority listed in Paragraph (J) you will address, such as education reform or teaching skills. Proposals may address more than one educational priority, however, EPA cautions against losing focus on projects. Evaluation panels often select projects with a clearly defined purpose, rather than projects that attempt to address multiple priorities at the expense of a quality outcome.

(d) *Delivery Method:* Explain how you will reach your audience, such as workshops, conferences, field trips, interactive programs, etc.

(e) *Audience:* Describe the demographics of your target audience including the number and types you expect to reach, such as teachers and/or students and specific grade levels, health care providers, the general public, etc.

(f) *Costs:* List the types of activities on which you will spend the EPA portion of the grant funds.

The project summary will be scored on how well you provide an overview of your entire project using the format and topics stated above.

Summary—Maximum Score: 10 points.

(2) *Project Description:* Describe precisely what your project will achieve—why, who, when, how, and with what. Explain each aspect of your proposal in enough detail to answer a grant reviewer's questions. To facilitate the comparison of your project with others it is to your advantage to use the format and order described below. If you change the order, include the headings below or you risk the possibility of important information being overlooked when the project is scored. Please address all of the following to ensure that grant reviewers can fully comprehend and score your project fairly.

This subsection will be scored on how well you design and describe your project; how effectively your project meets the following criteria; and how well you describe your specific tasks to enable EPA to measure your success after the project is underway.

(a) *Why:* Explain the purpose of your project and how it will address an educational priority listed in Paragraph (J), such as teaching skills. Also identify your environmental issue, such as energy conservation, clean air, ecosystem protection, or cross-cutting topics. Explain the importance to your community, state, or region. Explain how your project will increase environmental stewardship. If the project has the potential for wide application, and/or can serve as a model for use in other locations with a similar audience explain it.

(b) *Who:* Explain who will manage and conduct the project; also identify the target audience, the number to be trained, and demonstrate an understanding of the needs of that audience. *Important:* Explain your recruitment plan to attract your target audience; and clarify any incentives used such as stipends or continuing education credits.

(c) *How:* Explain your strategy, objectives, activities, delivery methods, and outcomes to establish that you have realistic goals and objectives and will use effective methods to achieve them. Clarify for the reviewers how you will complete all basic steps from beginning to end. Do not omit steps that lead up to or follow the actual delivery methods, *e.g.*, if you plan to make a presentation about your project at a local or national conference, specify where.

(d) *With What:* Demonstrate that the project uses or produces quality educational products or methods that teach critical-thinking, problem-solving, and decision-making skills. Note: Restrictions on the development of curriculum and educational materials are specified in Paragraph H.

Description—Maximum Score: 40 points (10 points for each of (a) through (d)).

(3) *Project Evaluation:* Explain how you will ensure that you are meeting the goals, objectives, outputs, and outcomes of your project. Evaluation plans may be quantitative and/or qualitative and may include, for example, evaluation tools, observation, or outside consultation. *Please Note:* All applicants under this grant cycle must be willing to comply with forthcoming EPA requirements for using a pre and post training questionnaire to determine the overall effectiveness of this grant program. Additional information about this requirement should be available by the summer of 2005 when grant finalists are selected and awarded.

The project evaluation will be scored on how well your plan will: (a) Measure the project's effectiveness; and (b) apply evaluation data gathered during your project to strengthen it.

Evaluation—Maximum Score: 10 points (5 points each for (a) and (b)).

(4) *Budget:* Clarify how EPA funds and non-federal matching funds will be used for specific items or activities, such as personnel/salaries, fringe benefits, travel, equipment, supplies, contract costs, and indirect costs. Include a table which lists each major proposed activity, and the amount of EPA funds and/or matching funds that will be spent on each activity. Smaller grants with uncomplicated budgets may have a table that lists only a few activities. (See more detailed instructions for Budget Form 424A in back.)

Please note the following funding restrictions:

—Indirect costs may be requested only if your organization already has an Indirect Cost Rate Agreement in place with a Federal Agency and has it on file, subject to audit. High indirect costs may affect the competitiveness of your proposal.

—Funds for salaries and fringe benefits may be requested only for those

personnel who are directly involved in implementing the proposed project and whose salaries and fringe benefits are directly related to specific products or outcomes of the proposed project. EPA strongly encourages applicants to request reasonable amounts of funding for salaries and fringe benefits to ensure that your proposal is competitive.

—EPA will not fund the acquisition of real property (including buildings) or the construction or modification of any building.

Matching Funds Requirement: Non-federal matching funds of at least 25% of the total cost of the project are required, and EPA encourages additional matching funds where possible. The match must be for an allowable cost and may be provided by the applicant or a partner organization or institution. The match may be provided in cash or by in-kind contributions and other non-cash support. In-kind contributions often include salaries or other verifiable costs and this value must be carefully documented. In the case of salaries, applicants may use either minimum wage or fair market value. If the match is provided by a partner organization, the applicant is still responsible for proper accountability and documentation. All grants are subject to Federal audit.

Important: The matching non-federal share is a percentage of the entire cost of the project. For example, if the 75% federal portion is $10,000, then the entire project should, at a minimum, have a budget of $13,333, with the recipient providing a contribution of $3,333. To assure that your match is sufficient, simply divide the Federally requested amount by three. Your match must be at least one-third of the requested amount to be sufficient.

Other Federal Funds: You may use other Federal funds in addition to those provided by this program, but not for activities that EPA is funding. You may not use any federal funds to meet any part of the required 25% match described above, unless it is specifically authorized by statute. If you have already been awarded federal funds for a project for which you are seeking additional support from this program, you must indicate those funds in the budget section of the work plan. You must also identify the project officer, agency, office, address, phone number, and the amount of the federal funds.

This subsection will be scored on: (a) How well the budget information clearly and accurately shows how funds will be used; (b) whether the funding request is reasonable given the activities proposed; and (c) whether the funding provides a good return on the investment.

Budget—Maximum Score: 15 points (5 points for each of (a) through (c)).

(5) *Appendices:*

(a) *Timeline*—Include a ''timeline'' to link your activities to a clear project schedule and indicate at what point over the months of your budget period each action, event, milestone, product development, etc. occurs.

(b) *Key Personnel*—Attach a one page resume for the key personnel conducting the project. (Maximum of 3 one page resumes please.)

(c) *Letters of Commitment*—If the applicant organization has partners, such as schools, state agencies, or other organizations, include letters of commitment from partners explaining their role in the proposed project. Do not include letters of endorsement or recommendation or have them mailed in later; they will not be considered in evaluating proposals.

Please do not submit other appendices or attachments such as video tapes or sample curricula. EPA may request such items if your proposal is among the finalists under consideration for funding.

This subsection will be scored based upon: (1) How well the timeline clarifies the workplan and establishes for reviewers that the project is well thought out and feasible as planned; (2) the qualifications and skills of key personnel to implement the project; and (3) the type of partnership (if any) and the extent to which a firm commitment is made by the partner to provide services, facilities, funding, etc.

Appendices—Maximum Score: 15 points (5 points each (a) through (c)).

(6) *Bonus Points:* Reviewers have the flexibility to provide up to 10 bonus points for exceptional projects based on the following criteria. (a) A maximum of 5 bonus points for: Addressing an educational priority or environmental issue well, enhancing environmental stewardship, strong partnerships, solid recruitment plan for teachers or other target audience, creative use of resources, innovation, or other strengths noted by the reviewers. (b) A maximum of 5 bonus points for a well explained and easily read proposal. Factors for points could include: Clear and concise, well organized, no unnecessary jargon, and other strengths noted by the reviewers who evaluate and compare proposals.

Bonus Points—Maximum Score: 10 points (5 points each for (a) and (b)).

L. Page Limits

The Work Plan should not exceed 5 pages. ''One page'' refers to one side of a single-spaced typed page. The pages must be letter sized (8½ x 11 inches), with margins at least one-half inch wide and with normal type size (11 or 12 font), rather than extremely small type. The 5 page limit applies to the narrative portion, *i.e.*, the Summary, Project Description, and Project Evaluation. The Detailed Budget, Timeline, and Appendices are not included in the page limit.

M. Submission Requirements and Copies

The applicant must submit one original and *two* copies of the proposal (a signed SF–424, an SF–424A, a work plan, a detailed budget, and the appendices listed above). Do *not* include other attachments such as cover letters, tables of contents, additional federal forms, divider sheets, or appendices other than those listed above. Grant reviewers often lower scores on proposals for failure to follow instructions. Your pages should be sorted as listed in Paragraph (K) with the SF–424 being the first page of your proposal and signed by a person authorized to receive funds. Blue ink for signatures is preferred. Proposals must be reproducible; they should not be bound. They should be stapled or clipped once in the upper left hand corner, on white paper, and with page numbers because many proposals get copied at one time. Mailing addresses for submission of proposals are listed at the end of this document and the deadline for submission is in Paragraph (C).

Forms: If you receive this solicitation electronically and if the standard federal forms for Application (SF–424) and Budget (SF–424A) cannot be printed by your equipment, you may locate them the following ways (but please read our instructions which have been modified for this grant program): the **Federal Register** in which this document is published contains the forms and is available to be copied at many public libraries; or you may call or write the appropriate EPA office listed at the end of this document.

Section V.—Application Review and Selection Process

N. Proposal Review

Proposals submitted to EPA headquarters and regional offices will be evaluated using the criteria defined here and in Section IV of this solicitation. Proposals will be reviewed in two phases—the screening phase and the

evaluation phase. During the screening phase, proposals will be reviewed to determine if they meet the basic eligibility requirements. Only those proposals satisfying all of the basic requirements will enter the full evaluation phase of the review process. During the evaluation phase, proposals will be evaluated based upon the quality of their work plans. Reviewers conducting the screening and evaluation phases of the review process will include EPA officials and external environmental educators approved by EPA. At the conclusion of the evaluation phase, the reviewers will score proposals based upon the scoring system described in detail in Section IV. In summary, the maximum score of 100 points can be reached as follows:

(1) Project Summary—10 Points.
(2) Project Description—40 Points.
(3) Project Evaluation—10 Points.
(4) Budget—15 Points.
(5) Appendices—15 Points.
(6) Bonus Points—10 Points (Only for outstanding proposals).

O. Final Selections

After individual projects are evaluated and scored by reviewers, as described above, EPA officials in the regions and at headquarters will select a diverse range of finalists from the highest ranking proposals. In making the final selections, EPA will take into account the following:

(1) Effectiveness of collaborative activities and partnerships, as needed to successfully implement the project;

(2) Environmental and educational importance of the activity or product;

(3) Effectiveness of the delivery mechanism (i.e., workshop, conference, etc.);

(4) Cost effectiveness of the proposal; and

(5) Geographic distribution of projects.

P. Notification to Applicants

Applicants will receive a confirmation that EPA has received their proposal once EPA has received all proposals and entered them into a computerized database, usually within two months of receipt. Usually within six months of application, EPA will contact finalists to request additional federal forms and other information as recommended by reviewers; and send rejection letters to the others.

Section VI—Award Information—Grantee Responsibilities

Q. Responsible Officials

Projects must be performed by the applicant or by a person satisfactory to the applicant and EPA. All proposals must identify any person other than the applicant who will assist in carrying out the project. These individuals are responsible for receiving the grant award agreement from EPA and ensuring that all grant conditions are satisfied. Recipients are responsible for the successful completion of the project.

R. Incurring Costs

Grant recipients may begin incurring allowable costs on the start date identified in the EPA grant award agreement. Activities must be completed and funds spent within the time frames specified in the award agreement. EPA grant funds may be used only for the purposes set forth in the grant agreement and must conform to Federal cost principles contained in OMB Circulars A–87; A–122; and A–21, as appropriate. Ineligible costs will be reduced from the final grant award.

S. Reports and Work Products

Specific financial, technical, and other reporting requirements to measure your progress will be identified in the EPA grant award agreement. Grant recipients must submit formal quarterly or semi-annual progress reports, as instructed in the award agreement. Also, two copies of a final report and two copies of all work products must be sent to the EPA project officer within 90 days after the expiration of the budget period. This submission will be accepted as the final requirement, unless the EPA project officer notifies you that changes must be made or that tasks are incomplete.

Section VII—Agency Contacts—Resource Information

T. Internet: http://www.epa.gov/enviroed.

Please visit our Web site where you can view and download: federal forms, tips for developing successful grant applications, descriptions of projects funded under this program by state, and other education links and resource materials. The ''Excellence in EE'' series of publications listed there includes guidelines for: developing and evaluating educational materials; the initial preparation of environmental educators; and using environmental education in grades K–12 to support state and local education reform goals.

U. Other Funding

Please note that this is a very competitive grant program. Limited funding is available and many qualified grant applications will not be reached by EPA even though efforts will be made to secure funding from all available sources within the Agency. If your project is not funded, you may wish to review other available grant programs in the *Catalog of Federal Domestic Assistance,* at *http://www.cfda.gov/* and *http://www.grants.gov* which also lists funding opportunities.

V. Regulatory References

The Environmental Education Grant Program Regulations, published in the **Federal Register** on March 9, 1992, provide additional information on EPA's administration of this program (57 FR 8390; Title 40 CFR, part 47 or 40 CFR part 47). Also, EPA's general assistance regulations at 40 CFR part 31 apply to state, local, and Indian tribal governments and 40 CFR part 30 applies to all other applicants such as nonprofit organizations.

W. Federal Procedures

(1) *Pre-application Assistance:* None planned.

(2) *Dispute Resolution Process:* Procedures are in 40 CFR 30.63 and 40 CFR 31.70.

(3) *Confidential Business Information:* Applicants should clearly mark information contained in their proposal which they consider confidential business information. EPA will make final confidentiality decisions as specified in 40 CFR part 2, subpart B. If no such claim accompanies a proposal when it is received by EPA, it may be made available to the public without further notice to the applicant.

X. Mailing List for Environmental Education Grants

EPA annually creates a new mailing list for this grant program, except that all applicants who respond to this Solicitation Notice will automatically be put on the next list (future grant cycles are contingent upon availability of funding from Congress). If you fail to submit a proposal in response to this Solicitation Notice, but wish to be notified when it is issued, or added to the mailing list, please enter your e-mail address on our Web site or mail your request along with your name, organization, address, and phone number to: Environmental Education Grant Program (Year 2006), EPA Office of Environmental Education (1704 A), 1200 Pennsylvania Avenue, NW., Washington, DC 20460.

Dated: September 9, 2004.

Cece Kremer,

Deputy Associate Administrator, Office of Public Affairs.

Mailing Addresses and Information

Applicants who need clarification about specific requirements in this Solicitation Notice, may contact the Environmental Education Office in Washington, DC for grant requests of more than $50,000 in Federal funds, or their EPA regional office for grant requests of $50,000 or less. Addresses differ for courier versus postal service at Headquarters and in some regions.

U.S. EPA Headquarters—For Proposals Requesting More Than $50,000 From EPA

Mail proposals (regular mail) to:
Environmental Education Grant Program, Office of Environmental Education (1704 A), 1200 Pennsylvania Avenue, NW., Washington, DC 20460.

Fed Ex, UPS or Courier to:
Office of Environmental Education (Room 1426A North), 1200 Pennsylvania Avenue, NW., Washington, DC 20004.

Information: Diane Berger or Sheri Jojokian (202) 564–0451.

U.S. EPA Regional Offices—For Proposals Requesting $50,000 or Less

Mail the proposal to the Regional Office where the project will take place, rather than where the applicant is located, if these locations are different.

EPA Region I—CT, ME, MA, NH, RI, VT

Mail proposals to:
U.S. EPA, Region I, Enviro Education Grants (MGM), 1 Congress Street, Suite 1100, Boston, MA 02114.

Hand-deliver to:
10th Floor Mail Room, Boston, MA (M–F 8 a.m.–4 p.m.).

Information:
Kristen Conroy, (617) 918–1069, *conroy.kristen@epa.gov*.

EPA Region II—NJ, NY, PR, VI

Mail proposals to:
U.S. EPA, Region II, Enviro Education Grants, Grants and Contracts Management Branch, 290 Broadway, 27th Floor, New York, NY 10007–1866.

Information:
Teresa Ippolito, (212) 637–3671, *ippolito.teresa@epa.gov*.

EPA Region III—DC, DE, MD, PA, VA, WV

Mail proposals to:
U.S. EPA, Region III, Enviro Education Grants, Grants Management Section (3PM70), 1650 Arch Street, Philadelphia, PA 19103–2029.

Information:
Bonnie Turner-Lomax, (215) 814–5542, *lomax.bonnie@epa.gov*.

EPA Region IV—AL, FL, GA, KY, MS, NC, SC, TN

Mail proposals to:
U.S. EPA, Region IV, Enviro Education Grants, Office of Public Affairs, 61 Forsyth Street, SW., Atlanta, GA 30303.

Information:
Benjamin Blair, (404) 562–8321, *blair.benjamin@epa.gov*.

EPA Region V—IL, IN, MI, MN, OH, WI

Mail proposals to:
U.S. EPA, Region V, Enviro Education Grants, Grants Management Section (MC–10J), 77 West Jackson Boulevard, Chicago, IL 60604.

Information:
Megan Gavin, (312) 353–5282, *gavin.megan@epa.gov*.

EPA Region VI—AR, LA, NM, OK, TX

Mail proposals to:
U.S. EPA, Region VI, Enviro Education Grants, (6XA), 1445 Ross Avenue, Dallas, TX 75202.

Information:
Jo Taylor, (214) 665–2204, *taylor.jo@epa.gov*.

Region VII—IA, KS, MO, NE

Mail proposal to:
U.S. EPA, Region VII, Enviro Education Grants, Office of External Programs, 901 N. 5th Street, Kansas City, KS 66101.

Information:
Denise Morrison, (913) 551–7402, *morrison.denise@epa.gov*.

Region VIII—CO, MT, ND, SD, UT, WY

Mail proposals to:
U.S. EPA, Region VIII, Enviro Education Grants, 999 18th Street (80C), Denver, CO 80202–2466.

Information:
Christine Vigil, (800) 227–8917 ext. 6605, *vigil.christine@epa.gov*.

Region IX—AZ, CA, HI, NV, American Samoa, Guam

Mail proposals to:
U.S. EPA, Region IX, Enviro Education Grants (PPA–2), 75 Hawthorne Street, San Francisco, CA 94105.

Information:
Bill Jones, (415) 947–4276, *jones.bill@epa.gov*.

Region X—AK, ID, OR, WA

Mail proposals to:
U.S. EPA, Region X, Enviro Education Grants, Public Environmental Resource Center, 1200 Sixth Avenue (ETPA–124), Seattle, WA 98101.

Information:
Sally Hanft, (800) 424–4372, (206) 553–1207, *hanft.sally@epa.gov*.

Instructions for the SF 424—Application

This is a standard Federal form to be used by applicants as a required face sheet for the Environmental Education Grants Program. These instructions are modified for this program only and do not apply to any other Federal program.

1. Choose ''Non-Construction''—under Application—construction costs are unallowable.

2. Fill in the date you forward application to EPA. Leave ''Applicant Identifier'' blank as it will be a federal ID number filled in by EPA. If you have a state ID number it goes on the line directly below.

3. State use only (if applicable) or leave blank.

4. DUNS Number: All organizations making application for federal grant funds must now have a DUNS Identification Number. Enter it into the block entitled ''Federal Identifier'' or if you use a form from another Web site, you may enter the DUNS number in Section 5. You may acquire a DUNS number via telephone or Web site from Dun and Bradstreet. The Web site is *http://www.dnb.com* and the toll free phone number is 1–866–705–5711.

5. Legal name of applicant organization, name of primary organizational unit which will undertake the grant activity, complete address of the applicant organization, and name, telephone, FAX number and email address of the person to contact on matters related to this application. You do *not* have to list the ''county'' as part of the address.

6. Enter Employer Identification Number (EIN) as assigned by the Internal Revenue Service. You can obtain this number from your payroll office. It is the same Federal Identification Number which appears on W–2 forms. If your organization does not have a number, you may obtain one by calling the Taxpayer Services number for the IRS.

7. Enter the appropriate letter in the space provided and if you are a not-for-profit organization you must be categorized as a 501(c)(3) by IRS to be eligible for this grant program

8. Check the box marked ''new'' since all proposals must be for new projects.

9. Enter U.S. Environmental Protection Agency.

10. Enter 66.951 Environmental Education Grants Program.

11. Enter a descriptive title of the project—please make it brief and also helpful as a descriptive title to be used in press releases and grant profiles which go onto our Web site.

12. List only the largest areas affected by the project (*e.g.*, State, counties, cities).

13. Please see Section I(C) in Solicitation Notice for specifics on project/budget periods.

14. In (a) list the Congressional District where the applicant organization is located; and in (b) any District(s) affected by the program or project. If your project covers many areas, several congressional districts will be listed. If it covers the entire state, simply put in statewide. If you are not sure about the congressional district, call the County Voter Registration Department.

15. Amount requested or to be contributed during the funding/budget period by each contributor. Line (a) is for the amount of money you are requesting from EPA. Lines (b–e) are for the amounts either you or another organization are providing for this project. Line (f) is for any program income which you expect will be generated by this project. Examples of program income are fees for services performed, income generated from the sale of materials produced with the grant funds, or admission fees to a conference financed by the grant funds. The total of lines (b–e) must be at least 25% of line (g), because this grant program has a matching requirement of 25% of the total allowable project costs. Divide line (a) by three to determine the smallest match allowable for your proposal. Value of in-kind contributions

should be included on appropriate lines as applicable. For multiple program funding, use totals and show breakdown using same categories as item 15.

16. Check (b) (NO) since this program is exempt from this requirement.

17. This question applies to the applicant organization, not the person who signs as the authorized representative. Categories of debt include delinquent audit disallowances, loans and taxes.

18. The authorized representative is the person who is able to contract or obligate your agency to the terms and conditions of the grant. (Please sign with blue ink.) A copy of the governing body's authorization for you to sign this application as official representative must be on file in the applicant's office.

Instructions for the SF–424A—Budget

This is a standard Federal form used by applicants as a basic budget. These instructions are modified for this grant program only and do not apply to any other Federal Program. Section A—Budget Summary—Do not complete—Leave blank for this program.

Section B—Budget Categories—Complete Columns (1), (2) and (5) as stated below.

All funds requested and contributed as a match must be listed under the appropriate Object Class categories listed on this form. Please round figures to the nearest dollar. Include Federal funds in column (1); Non-Federal (matching) funds in column (2); then add sideways and put the totals in column (5) for all categories. Many applicants will have blank lines in some Object Class Categories and no applicant should use line 6(g) Construction because it is an unallowable cost for this program. **Note:** Your figures on the Form 424 and 424A and detailed budget should all wind up with the same total dollars.

Line 6(i)—Show the totals of lines 6(a) through 6(h) in each column.

Line 6(j)—Show the amount of indirect costs, but only if your organization already has an Indirect Cost Rate Agreement with a Federal Agency and has it on file, subject to audit.

Line 6(k)—Enter the total of amounts of Lines 6(i) and 6(j).

Line 7—*Program Income*—Enter the estimated amount of income, if any, expected to be generated from this project. Do not add or subtract this amount from the total project amount. Describe the nature and source of income in the detailed budget description and your planned use of the funds to enhance your project.

Detailed Itemization of Costs: The proposal must also contain a detailed budget description as specified in Section IV (K)(4) of this Notice, and should conform to the following:

Personnel: List all participants in the project by position title. Give the percentage of the budget period for which they will be fully employed on the project (*e.g.*, half-time for half the budget period equals 25%, full-time for half the budget period equals 50%, etc.). The detail should include for each person: Percentage of Time on project X Annual Salary = Personnel Cost. List this data for all personnel in your detailed budget and then put the total on the Form 424A.

Travel: If travel is budgeted, show trips, destinations, and purpose of travel as well as costs.

Equipment: Identify each piece of equipment with a cost of $5,000 or more per unit to be purchased and explain the purpose for which it will be used. List less costly items under supplies.

Supplies: List categories of supplies, *e.g.* laboratory supplies and office supplies for items that can be grouped. If the supply budget is less than 2% of total costs, you do not need to itemize.

Contractual: Specify the nature and cost of such services. EPA may require review of contracts for personal services prior to their execution to assure that all costs are reasonable and necessary to the project.

Construction: Not allowable for this program.

Other: Specify all other costs under this category.

Indirect Costs: Not allowable unless you have an approved rate with a Federal agency. Provide an explanation of how indirect charges were calculated for this project. Be aware that high indirect costs may reduce the competitiveness of your proposal.

Income: Describe the source of your income and how it will be used to enhance your project.

BILLING CODE 6560–50–P

OMB Approval No. 0348-0043

APPLICATION FOR FEDERAL ASSISTANCE

2. DATE SUBMITTED 11/15/04	Applicant Identifier	
3. DATE RECEIVED BY STATE	State Application Identifier	
4. DATE RECEIVED BY FEDERAL AGENCY	Federal Identifier DUNS # See instructions on how to acquire this number	

1. TYPE OF SUBMISSION:
Application: ☐ Construction ☒ Non-Construction
Preapplication: ☐ Construction ☐ Non-Construction

5. APPLICANT INFORMATION

Legal Name: Wythe County School System

Organizational Unit: Office of Teacher Training

Address (give city, county, state, and zip code): 219 Main Street, Wytheville, VA 12345

Name and telephone number of the person to be contacted on matters involving this application (give area code): Janet Jones (TEL) (540) 223-4567 (FAX) (540) 223-7890 jones.j@wcs.edu

6. EMPLOYER IDENTIFICATION NUMBER (EIN): 1 2 – 3 4 5 6 7 8 9

7. TYPE OF APPLICANT: (enter appropriate letter in box) B
A. State; B. County; C. Municipal; D. Township; E. Interstate; F. Intermunicipal; G. Special District; H. Independent School Dist.; I. State Controlled Institution of Higher Learning; J. Private University; K. Indian Tribe; L. Individual; M. Profit Organization; N. Non-Profit; O. Other (Specify)

8. TYPE OF APPLICATION:
☒ New ☐ Continuation ☐ Revision
If Revision, enter appropriate letter(s) in box(es): ☐ ☐
A. Increase Award; B. Decrease Award; C. Increase Duration; D. Decrease Duration; Other (specify):

9. NAME OF FEDERAL AGENCY: U.S. ENVIRONMENTAL PROTECTION AGENCY

10. CATALOG OF FEDERAL DOMESTIC ASSISTANCE NUMBER: 6 6 . 9 5 1
TITLE: ENVIRONMENTAL EDUCATION GRANT

11. DESCRIPTIVE TITLE OF APPLICANT'S PROJECT:
"Eco-Blue" Teacher Training re: Ecosystems in the Blue Ridge Mountains

12. AREAS AFFECTED BY PROJECT (cities, counties, states, etc.):
3 Counties: Wythe, Smith, Green

EXAMPLE

13. PROPOSED PROJECT: Start Date 7/1/05; Ending Date 6/30/06

14. CONGRESSIONAL DISTRICTS OF: a. Applicant 02; b. Project 02, 04, 12

15. ESTIMATED FUNDING:

a. Federal	$ 10,000	.00
b. Applicant	$ 3,000	.00
c State	$	.00
d Local	$	.00
e Other	$ 334	.00
f. Program Income	$	.00
g TOTAL	$ 13,334	.00

16. IS APPLICATION SUBJECT TO REVIEW BY STATE EXECUTIVE ORDER 12372 PROCESS?
a. YES. THIS PREAPPLICATION/APPLICATION WAS MADE AVAILABLE TO THE STATE EXECUTIVE ORDER 12372 PROCESS FOR REVIEW ON
DATE _____
b NO. ☒ PROGRAM IS NOT COVERED BY E.O. 12372
☐ OR PROGRAM HAS NOT BEEN SELECTED BY STATE FOR REVIEW

17. IS THE APPLICANT DELINQUENT ON ANY FEDERAL DEBT?
☐ Yes If "Yes," attach an explanation. ☐ No

18. TO THE BEST OF MY KNOWLEDGE AND BELIEF, ALL DATA IN THIS APPLICATION/PREAPPLICATION ARE TRUE AND CORRECT, THE DOCUMENT HAS BEEN DULY AUTHORIZED BY THE GOVERNING BODY OF THE APPLICANT AND THE APPLICANT WILL COMPLY WITH THE ATTACHED ASSURANCES IF THE ASSISTANCE IS AWARDED

a. Typed Name of Authorized Representative: John Smith	b Title: Superintendent of Schools	c Telephone number: (540) 223-4231
d Signature of Authorized Representative: John Smith		e Date Signed: 11/15/04

Previous Editions Not Usable

Standard Form 424 REV 1-9
Prescribed by OMB Circular A-102

Authorized for Local Reproduction

OMB Approval No. 0348-0044

BUDGET INFORMATION — Non-Construction Programs

EXAMPLE

SECTION A — BUDGET SUMMARY

Grant Program Function or Activity (a)	Catalog of Federal Domestic Assistance Number (b)	Estimated Unobligated Funds (c)		New or Revised Budget (e)	
		Federal (d)	Non-Federal (e)	Federal (f)	Non-Federal (g)
Totals					

SECTION B — BUDGET CATEGORIES

6. Object Class Categories	GRANT PROGRAM, FUNCTION OR ACTIVITY				Total (5)
	(1) Federal Funds	(2) Non-Federal Match			
a. Personnel	$ 4,200	$ 1,600			$ 5,800
b. Fringe Benefits	400	200			600
c. Travel	500	200			700
d. Equipment					
e. Supplies	2,300	1,000			3,300
f. Contractual	1,200				1,200
g. Construction	XXXXXXXXXXX	XXXXXXXXXXX			XXXXXXXXXXX
h. Other	1,400	334			1,734
i. Total Direct Charges (sum of 6a - 6h)	10,000	3,334			13,334
j. Indirect Charges					
k. TOTALS (sum of 6i and 6j)	$ 10,000	$ 3,334			$ 13,334
7. Program Income	$	$			$

Authorized for Local Reproduction

Standard Form 424A (4-88)
Prescribed by OMB Circular A-102

APPLICATION FOR FEDERAL ASSISTANCE

OMB Approval No. 0348-0043

2. DATE SUBMITTED

Applicant Identifier

1. TYPE OF SUBMISSION:

Application
☐ **Construction**
☑ **Non-Construction**

Preapplication
☐ **Construction**
☐ **Non-Construction**

3. DATE RECEIVED BY STATE

State Application Identifier

4. DATE RECEIVED BY FEDERAL AGENCY

DUNS #:

5. APPLICANT INFORMATION

Legal Name:

Organizational Unit:

Address *(give city, State, and zip code)*:

Name and telephone number of person to be contacted on matters involving this application *(give area code)*

Name (Tel)

Email (Fax)

6. EMPLOYER IDENTIFICATION NUMBER *(EIN)*:

☐☐ — ☐☐☐☐☐☐☐

7. TYPE OF APPLICANT: *(enter appropriate letter in box)* ☐

A. State
B. County
C. Municipal
D. Township
E. Interstate
F. Intermunicipal
G. Special District
H. Independent School Dist.
I. State Controlled Institution of Higher Learning
J. Private University
K. Indian Tribe
L. Individual
M. Profit Organization
N. Non-Profit
O. Other (Specify)

8. TYPE OF APPLICATION:

☑ **New** ☐ **Continuation** ☐ **Revision**

If Revision, enter appropriate letter(s) in box(es) ☐ ☐

A. Increase Award B. Decrease Award C. Increase Duration
D. Decrease Duration Other*(specify)*:

9. NAME OF FEDERAL AGENCY:

U.S. Environmental Protection Agency

10. CATALOG OF FEDERAL DOMESTIC ASSISTANCE NUMBER:

6 6 — 9 5 1

TITLE: Environmental Education Grant

11. DESCRIPTIVE TITLE OF APPLICANT'S PROJECT:

12. AREAS AFFECTED BY PROJECT *(Cities, Counties, States, etc.)*:

13. PROPOSED PROJECT

Start Date | Ending Date

14. CONGRESSIONAL DISTRICTS OF:

a. Applicant

b. Project

15. ESTIMATED FUNDING:

a. Federal	$ .00
b. Applicant	$ .00
c. State	$ .00
d. Local	$ .00
e. Other	$ .00
f. Program Income	$ .00
g. TOTAL	$ .00

16. IS APPLICATION SUBJECT TO REVIEW BY STATE EXECUTIVE ORDER 12372 PROCESS?

a. YES. THIS PREAPPLICATION/APPLICATION WAS MADE AVAILABLE TO THE STATE EXECUTIVE ORDER 12372 PROCESS FOR REVIEW ON:

DATE _____

b. No. ☑ PROGRAM IS NOT COVERED BY E. O. 12372
☐ OR PROGRAM HAS NOT BEEN SELECTED BY STATE FOR REVIEW

17. IS THE APPLICANT DELINQUENT ON ANY FEDERAL DEBT?

☐ **Yes** **If "Yes," attach an explanation.** ☐ **No**

18. TO THE BEST OF MY KNOWLEDGE AND BELIEF, ALL DATA IN THIS APPLICATION/PREAPPLICATION ARE TRUE AND CORRECT, THE DOCUMENT HAS BEEN DULY AUTHORIZED BY THE GOVERNING BODY OF THE APPLICANT AND THE APPLICANT WILL COMPLY WITH THE ATTACHED ASSURANCES IF THE ASSISTANCE IS AWARDED.

a. Type Name of Authorized Representative

b. Title

c. Telephone Number

d. Signature of Authorized Representative

e. Date Signed

Previous Edition Usable
Authorized for Local Reproduction

Standard Form 424 (Rev. 7-97)
Prescribed by OMB Circular A-102

BUDGET INFORMATION - Non-Construction Programs

OMB Approval No.: 0348-0044

SECTION A - BUDGET SUMMARY

SECTION B - BUDGET CATEGORIES

6. Object Class Categories	GRANT PROGRAM, FUNCTION OR ACTIVITY			Total
	(1) Federal Funds	(2) Non-Federal Match		(5)
a. Personnel	$	$		$
b. Fringe Benefits				
c. Travel				
d. Equipment				
e. Supplies				
f. Contractual				
g. Construction	XXXXXXXXXXXX	XXXXXXXXXXXX		XXXXXXXXXXXX
h. Other				
i. Total Direct Charge (sum of 6a-6h)	.00	.00		.00
j. Indirect Charges				
k. TOTALS (sum of 6i and 6j)	$ .00	$ .00		$ .00
7. Program Income	$	$		$

Previous Edition Usable

Authorized for Local Reproduction

Standard Form 424A (Rev. 4-92)
Prescribed by OMB Circular A-102

[FR Doc. 04–20796 Filed 9–14–04; 8:45 am]
BILLING CODE 6560–50–C

ENVIRONMENTAL PROTECTION AGENCY

[OPPT–2002–0001]; FRL–7678–4]

National Pollution Prevention and Toxics Advisory Committee (NPPTAC); Notice of Public Meeting

AGENCY: Environmental Protection Agency (EPA).

ACTION: Notice:

SUMMARY: Under the Federal Advisory Committee Act (FACA), 5 U.S.C. App. 2 (Public Law 92–463), EPA gives notice of a 1 day meeting of the National Pollution Prevention and Toxics Advisory Committee (NPPTAC). The purpose of the NPPTAC is to provide advice and recommendations to EPA regarding the overall policy and operations of the programs of the Office of Pollution Prevention and Toxics (OPPT).

DATES: The meeting will be held on October 7, 2004 from 9:30 a.m. to 4:30 p.m. Registration to attend the meeting, identified by docket ID number OPPT–2002–0001, must be received on or before September 21, 2004. Registration will also be accepted at the meeting.

Requests to provide oral comments at the meeting, identified as NPPTAC October 2004 meeting, must be received in writing on or before September 21, 2004.

Written comments, identified as NPPTAC October 2004 meeting, may be submitted at any time. Written comments received on or before September 21, 2004 will be forwarded to the NPPTAC members prior to or at the meeting.

ADDRESSES: The meeting will be held at the Hilton Arlington and Towers, 950 N. Stafford Street, Arlington, Virginia, 22203.

For address information concerning registration, the submission of written comments, and requests to present oral comments, refer to Unit I. of the **SUPPLEMENTARY INFORMATION.**

FOR FURTHER INFORMATION CONTACT: For general information contact: Colby Lintner, Regulatory Coordinator, Environmental Assistance Division (7408M), Office of Pollution Prevention and Toxics, Environmental Protection Agency, 1200 Pennsylvania Ave., NW., Washington, DC 20460–0001; telephone number: (202) 554–1404; e-mail address: *TSCA-Hotline@epa.gov*.

For technical information contact: Mary Hanley, (7401M), Office of Pollution Prevention and Toxics, Environmental Protection Agency, 1200 Pennsylvania Ave., NW., Washington, DC 20460–0001; telephone number: (202) 564–9891; e-mail address: *npptac.oppt@epa.gov*.

SUPPLEMENTARY INFORMATION:

I. General Information

A. Does this Action Apply to Me?

This action is directed to the public in general, and may be of particular interest to those persons who have an interest in or may be required to manage pollution prevention and toxic chemical programs, individuals, groups concerned with environmental justice, children's health, or animal welfare, as they relate to OPPT's programs under the Toxic Substances Control Act (TSCA) and the Pollution Prevention Act (PPA). Since other entities may also be interested, the Agency has not attempted to describe all the specific entities that may be interested in the activities of the NPPTAC. If you have any questions regarding the applicability of this action to a particular entity, consult the person listed under **FOR FURTHER INFORMATION CONTACT**.

B. How Can I Get Copies of this Document and Other Related Information?

1. *Docket*. EPA has established an official public docket for this action under docket identification (ID) number OPPT–2002–0001. The official public docket consists of the documents specifically referenced in this action, any public comments received, and other information related to this action. Although, a part of the official docket, the public docket does not include Confidential Business Information (CBI) or other information whose disclosure is restricted by statute. The official public docket is the collection of materials that is available for public viewing at the EPA Docket Center, Rm. B102–Reading Room, EPA West, 1301 Constitution Ave., NW., Washington, DC. The EPA Docket Center is open from 8:30 a.m. to 4:30 p.m., Monday through Friday, excluding legal holidays. The EPA docket center reading room telephone number is (202) 566–1744 and the telephone number for the OPPT Docket, which is located in EPA Docket Center, is (202) 566–0280.

2. *Electronic access*. You may access this **Federal Register** document electronically through the EPA Internet under the ''Federal Register'' listings at *http://www.epa.gov/fedrgstr/*.

An electronic version of the public docket is available through EPA's electronic public docket and comment system, EPA Dockets. You may use EPA Dockets at *http://www.epa.gov/edocket/* to submit or view public comments, access the index listing of the contents of the official public docket, and to access those documents in the public docket that are available electronically. Although, not all docket materials may be available electronically, you may still access any of the publicly available docket materials through the docket facility identified in Unit I.B.1. Once in the system, select ''search,'' then key in the appropriate docket ID number.

C. How and to Whom Do I Submit Comments?

You may submit comments electronically, by mail, or through hand delivery/courier. To ensure proper receipt by EPA, identify the appropriate docket ID number OPPT–2002–0001, NPPTAC October meeting in the subject line on the first page of your comment.

1. *By mail*. OPPT Document Control Office, Environmental Protection Agency, (7407M), 1200 Pennsylvania Avenue, NW, Washington, DC 20460–0001.

2. *Electronically*: At *http://www.epa.gov/edocket/*, search for OPPT–2002–0001, and follow the directions to submit comments.

3. *Hand delivery/courier*: OPPT Document Control Office in EPA East Bldg., Rm., M6428, 1201 Constitution Ave., NW, Washington DC.

II. Background.

The proposed agenda for the NPPTAC meeting includes: The High Production Volume Challenge Program; Pollution Prevention, Risk Assessment; Risk Management; Risk Communication, and coordination with Tribes and other stakeholders. The meeting is open to the public.

III. How Can I Request to Participate in this Meeting?

You may request to attend the meeting by filling out the registration form according to the instructions listed under Unit I.A. Please note that registration will assist in planning adequate seating; however, members of the public can register the day of the meeting. Therefore, all seating will be available on a first come, first serve basis.

1. To register to attend the meeting: Pre-registration for the October 2004 NPPTAC meeting and requests for special accommodations may be made by visiting the NPPTAC web site at: *http://www.epa.gov/oppt/npptac/meetings.htm*. Registration will also be available at the meeting. Special

accommodations may also be requested by calling (202) 564–9891 and leaving your name and telephone number.

2. To request an opportunity to provide oral comments: You must register first in order to request an opportunity to provide oral comments at the October 2004 NPPTAC meeting. To register visit the NPPTAC web site at: *http://www.epa.gov/oppt/npptac/meetings.htm*. Request to provide oral comments at the meeting must be submitted in writing on or before September 21, 2004, with a registration form. Please note that time for oral comments may be limited to 3 to 5 minutes per speaker, depending on the number of requests received.

3. *Written comments*. You may submit written comments to the docket listed under Unit I.B. Written comments can be submitted at any time. If written comments are submitted on or before September 21, 2004, they will be provided to the NPPTAC members prior to or at the meeting. If you provide written comments at the meeting, 35 copies will be needed.

Do not submit any information that is considered CBI.

List of Subjects

Environmental protection, NPPTAC, Pollution prevention, toxics, Toxic chemicals, Chemical health and safety.

Dated: September 2, 2004.

Charles M. Auer,

Director, Office of Pollution Prevention and Toxics

[FR Doc. 04–20679 Filed 9–14–04; 8:45 am]

BILLING CODE 6560–50–S

ENVIRONMENTAL PROTECTION AGENCY

[OPP–2004–0250; FRL–7681–2]

Response to Requests to Cancel Certain Creosote Wood Preservative Products, and/or to Amend to Terminate Certain Uses of Other Creosote Products

AGENCY: Environmental Protection Agency (EPA)

ACTION: Notice of Cancellations

SUMMARY: This notice announces that cancellation orders were signed on August 11, 2004, in response to the use terminations and cancellations voluntarily requested by the registrants of certain wood preservative products containing creosote pursuant to section 6(f)(1) of the Federal Insecticide, Fungicide, and Rodenticide Act (FIFRA), as amended. EPA issued final cancellation order letters to the five registrants of creosote products accepting their voluntary use termination requests/product cancellation requests to either amend current label language to delete non-pressure treatment uses of creosote or to cancel the affected products. Both the use terminations and the product cancellations are effective December 31, 2004. In addition to stating the Agency's response to the requests, this notice also addresses the comments received in response to the Agency's requests for public comments on the above stated requests.

DATES: The effective date of the voluntary product cancellations and/or use terminations for the affected creosote products is December 31, 2004.

FOR FURTHER INFORMATION CONTACT: Jacqueline McFarlane, Antimicrobials Division (7510C), Office of Pesticide Programs, Environmental Protection Agency, 1200 Pennsylvania Ave., NW., Washington, DC 20460–0001; telephone number: (703) 308–6416; e-mail address: *Campbell.jackie@epa.gov*.

SUPPLEMENTARY INFORMATION: The registrants who are members of the Creosote Council III requested cancellation of the registrations for their creosote non-pressure treatment end-use products and/or to amend to terminate all non-pressure treatment uses of other creosote products. These include all uses that are not applied to treated wood inside of the pressure treatment cylinder, such as thermal treatment, dipping, brush-on, etc. The Agency agreed to allow registrants to voluntarily cancel all non-pressure treatment uses of creosote. These registrants requested that these voluntary product cancellations and/or use terminations become effective December 31, 2004. All registrants waived the 180–day comment period (*i.e.*, any comment period in excess of 30 days). The Agency issued a notice of receipt of the aforementioned requests along with a solicitation for public comments (September 29, 2003), followed by another notice on November 26, 2003, to extend the comment period until December 26, 2003.

This announcement consists of five parts. The first part contains general information. The second part addresses public comments received during both comment periods. The third part describes action taken by the Agency. The fourth part describes the Agency's legal authority for the action announced in this notice. The fifth part addresses existing stocks provisions.

I. General Information

A. Does this Action Apply to Me?

This action is directed to the public in general. Although this action may be of particular interest to persons who produce or use pesticides, the Agency has not attempted to describe all the specific entities that may be affected by this action. If you have any questions regarding the information in this notice, consult the person listed under **FOR FURTHER INFORMATION CONTACT**.

B. How Can I Get Copies of this Document and Other Related Information?

1. *Docket*. EPA has established an official public docket for this action under docket identification (ID) number OPP–2004–0250. The official public docket consists of the documents specifically referenced in this action, any public comments received, and other information related to this action. Although a part of the official docket, the public docket does not include Confidential Business Information (CBI) or other information whose disclosure is restricted by statute. The official public docket is the collection of materials that is available for public viewing at the Public Information and Records Integrity Branch (PIRIB), Rm. 119, Crystal Mall #2, 1801 S. Bell Street, Arlington, VA 22202. This docket facility is open from 8:30 a.m. to 4 p.m., Monday through Friday, excluding legal holidays. The docket telephone number is (703) 305–5805.

2. *Electronic access*. You may access this **Federal Register** document electronically through the EPA Internet under the **''Federal Register''** listings at *http://www.epa.gov/fedrgstr/*.

An electronic version of the public docket is available through EPA's electronic public docket and comment system, EPA Dockets. You may use EPA Dockets at *http://www.epa.gov/edocket/* to submit or view public comments, access the index listing of the contents of the official public docket, and to access those documents in the public docket that are available electronically. Although not all docket materials may be available electronically, you may still access any of the publicly available docket materials through the docket facility identified in Unit I.B.1. Once in the system, select ''search,'' then key in the appropriate docket ID number.

II. Summary of Action, Public Comments Received and Agency Response to Comments

The Agency issued a notice of receipt of the aforementioned requests along with a solicitation for public comments

(September 29, 2003), followed by another notice on November 26, 2003, to extend the comment period until December 26, 2003. Nine comments were submitted by members of the wood preservative industry, attorneys for various stakeholders, potential registrants, associations, and city officials. No comments, however, were received relating to creosote. Because these notices included creosote and Acid Copper Chromate (ACC), seven of the comments received were related to ACC. Because ACC is not included in this cancellation order, those comments will be addressed in a later **Federal Register** notice. Two comments from the same association (Florida Fruit & Vegetable Association) addressed the importance of Chromated Copper Arsenate (CCA) as a product used to treat the stakes for fruiting vegetable crops, particularly tomatoes (comments seemingly misplaced in response to this notice, which did not include CCA; additionally, it should be noted that the treating of these stakes is disallowed under current CCA supplemental guidance). Therefore, there were no comments received which had to be factored into this decision.

III. What Action is the Agency Taking?

This notice announces the final issuance of cancellation orders for creosote registrations/terminations of non-pressure treatment uses. The Agency hereby cancels the registrations of three pesticide registrations and amends to terminate certain uses of seven other pesticide registrations listed below, effective December 31, 2004 (Tables 1 and 2).

TABLE 1.—REQUESTS FOR CANCELLATION OF PRODUCTS

Registration No.	Product name	Chemical name
061468–00005	Coal Tar Creosote	Creosote
073408–00001	Creosote	Creosote
073408–00002	Creosote Solution	Creosote

TABLE 2.—REQUEST FOR AMENDMENTS TO TERMINATE NON-PRESSURE TREATMENT USES

Registration No.	Product name	Chemical name
000363–00014	C-4 Brand Black Creosote Coal Tar solution	Creosote
000363–00015	C-4 Brand Cooperso-te Creosote Oil	Creosote
061468–00006	Creosote	Creosote
061470–00001	KMG-B Coal Tar Creosote	Creosote
061483–0007	Creosote Oil-24CB	Coal Tar Creosote
061483–0008	Creosote/ Coal Tar solution	Coal Tar Creosote
061483–0009	Creosote Oil	Coal Tar Creosote

Amendments to the product labels should be made via notification to the Agency in accordance with section 3(c)(9) of FIFRA on or before December 31, 2004, to delete the use directions for the uses subject to this cancellation order. Labels incorporating these amendments must be forwarded along with this notification.

Table 3 includes the names and addresses of record for all registrants of the products in Tables 1 and 2, in sequence by EPA company number:

TABLE 3.—REGISTRANTS REQUESTING VOLUNTARY CANCELLATION AND/OR AMENDMENT TO TERMINATE USES

EPA Company No.	Company name and address
000363	Coopers Creek Chemical Corp., 884 River Road, West Conshohocken, PA 19428–2699
061468	Koppers Inc., 436 Seventh Avenue, Pittsburgh, PA 15219–1800
061470	Rutgers Chemicals, 10611 Harwin Suite 402, Houston, TX 77036
061483	KMG-Bernuth, Inc., 10611 Harwin Drive, Suite 402, Houston, TX 77036–1534

TABLE 3.—REGISTRANTS REQUESTING VOLUNTARY CANCELLATION AND/OR AMENDMENT TO TERMINATE USES—Continued

EPA Company No.	Company name and address
073408	Railworks Wood Products, 2525 Prairieton Road, Terre Haute, IN 47802

IV. What is the Agency's Authority for Taking this Action?

Section 6(f)(1) of FIFRA provides that a registrant of a pesticide product may at any time request that any of its pesticide registrations be canceled or amended to terminate uses. FIFRA further provides that, before acting on the request, EPA must publish a notice of receipt of any such request in the **Federal Register**. Thereafter, the Administrator may approve such a request.

V. Provisions for Disposition of Existing Stocks

The registrants of affected creosote products have requested that the voluntary product cancellation and/or use terminations become effective December 31, 2004, with no provisions for existing stocks for the registrants. Consequently, the Agency is not allowing for any existing stocks provisions for those products in the hands of the registrant on the effective date of the cancellation/use termination. Any sale, distribution, or use by the registrant of these affected products on or after the effective date of this order is prohibited.

Existing stocks already in the hands of persons other than the registrant can be distributed, sold, or used legally until they are exhausted, provided that such further sale and use comply with the EPA-approved label of the affected product.

For purposes of this order, the term ''existing stocks'' is defined, pursuant to EPA's existing stocks policy (56 FR 29362, June 26, 1991), as those stocks of a registered pesticide product which are currently in the United States and which have been packaged, labeled, and released for shipment prior to the effective date of the cancellation or amendment. Any distribution, sale or use of existing stocks in a manner inconsistent with the terms of the cancellation order or the existing stocks provisions contained in the order will be considered a violation of section 12(a)(2)(K) and/or section 12(a)(1)(A) of FIFRA.

List of Subjects

Environmental Protection, Creosote, Pesticides and pests.

Dated: September 8, 2004.

Frank Sanders,

Director, Antimicrobials Division, Office of Pesticide Programs.

[FR Doc. 04–20798 Filed 9–14–04; 8:45 am]

BILLING CODE 6560–50–S

ENVIRONMENTAL PROTECTION AGENCY

[OPP–2004–0223; FRL–7674–9]

Acetamiprid; Notice of Filing a Pesticide Petition to Establish a Tolerance for a Certain Pesticide Chemical in or on Food

AGENCY: Environmental Protection Agency (EPA).

ACTION: Notice.

SUMMARY: This notice announces the initial filing of a pesticide petition proposing the establishment of regulations for residues of a certain pesticide chemical in or on various food commodities.

DATES: Comments, identified by docket identification (ID)number OPP–2004–0223, must be received on or before October 15, 2004.

ADDRESSES: Comments may be submitted electronically, by mail, or through hand delivery/courier. Follow the detailed instructions as provided in Unit I. of the **SUPPLEMENTARY INFORMATION**.

FOR FURTHER INFORMATION CONTACT: Akiva Abramovitch, Registration Division (7505C), Office of Pesticide Programs, Environmental Protection Agency, 1200 Pennsylvania Ave., NW., Washington, DC 20460–0001; telephone number: (703) 308–8328; e-mail address:*abramovitch.akiva@epa.gov*.

SUPPLEMENTARY INFORMATION:

I. General Information

A. Does this Action Apply to Me?

You may be potentially affected by this action if your rule stated ''perform renovations of target housing for compensation. Target housing is defined (see §745.103) as any housing constructed prior to 1978''. Potentially affected entities may include, but are not limited to:

- Industry (NAICS code 111)
- Crop production (NAICS code 1112)
- Animal production, (NAICS code 311)
- Food Manufacturing, (NAICS code 32532)

This listing is not intended to be exhaustive, but rather provides a guide for readers regarding entities likely to be affected by this action. Other types of entities not listed in this unit could also be affected. The North American Industrial Classification System (NAICS) codes have been provided to assist you and others in determining whether this action might apply to certain entities. If you have any questions regarding the applicability of this action to a particular entity, consult the person listed under **FOR FURTHER INFORMATION CONTACT**.

B. How Can I Get Copies of this Document and Other Related Information?

1. *Docket*. EPA has established an official public docket for this action under docket ID number OPP–2004–0223. The official public docket consists of the documents specifically referenced in this action, any public comments received, and other information related to this action. Although, a part of the official docket, the public docket does not include Confidential Business Information (CBI) or other information whose disclosure is restricted by statute. The official public docket is the collection of materials that is available for public viewing at the Public Information and Records Integrity Branch (PIRIB), Rm. 119, Crystal Mall # 2, 1801 South Bell St., Arlington, VA. This docket facility is open from 8:30 a.m. to 4 p.m., Monday through Friday, excluding legal holidays. The docket telephone number is (703) 305–5805.

2. *Electronic access*. You may access this **Federal Register** document electronically through the EPA Internet under the ''**Federal Register**'' listings at *http://www.epa.gov/fedrgstr/*.

An electronic version of the public docket is available through EPA's electronic public docket and comment system, EPA Dockets. You may use EPA Dockets at *http://www.epa.gov/edocket/* to submit or view public comments, access the index listing of the contents of the official public docket, and to access those documents in the public docket that are available electronically. Although, not all docket materials may be available electronically, you may still access any of the publicly available docket materials through the docket facility identified in Unit I.B.1. Once in the system, select ''search,'' then key in the appropriate docket ID number.

Certain types of information will not be placed in the EPA Dockets. Information claimed as CBI and other information whose disclosure is restricted by statute, which is not included in the official public docket, will not be available for public viewing in EPA's electronic public docket. EPA's policy is that copyrighted material will not be placed in EPA's electronic public docket but will be available only in printed, paper form in the official public docket. To the extent feasible, publicly available docket materials will be made available in EPA's electronic public docket. When a document is selected from the index list in EPA Dockets, the system will identify whether the document is available for viewing in EPA's electronic public docket. Although, not all docket materials may be available electronically, you may still access any of the publicly available docket materials through the docket facility identified in Unit I.B. EPA intends to work towards providing electronic access to all of the publicly available docket materials through EPA's electronic public docket.

For public commenters, it is important to note that EPA's policy is that public comments, whether submitted electronically or in paper, will be made available for public viewing in EPA's electronic public docket as EPA receives them and without change, unless the comment contains copyrighted material, CBI, or other information whose disclosure is restricted by statute. When EPA identifies a comment containing copyrighted material, EPA will provide a reference to that material in the version of the comment that is placed in EPA's electronic public docket. The entire printed comment, including the copyrighted material, will be available in the public docket.

Public comments submitted on computer disks that are mailed or delivered to the docket will be transferred to EPA's electronic public docket. Public comments that are mailed or delivered to the docket will be scanned and placed in EPA's electronic public docket. Where practical, physical objects will be photographed, and the photograph will be placed in EPA's electronic public docket along with a brief description written by the docket staff.

C. How and to Whom Do I Submit Comments?

You may submit comments electronically, by mail, or through hand delivery/courier. To ensure proper receipt by EPA, identify the appropriate docket ID number in the subject line on the first page of your comment. Please ensure that your comments are submitted within the specified comment period. Comments received after the close of the comment period will be marked ''late.'' EPA is not required to

consider these late comments. If you wish to submit CBI or information that is otherwise protected by statute, please follow the instructions in Unit I.D. Do not use EPA Dockets or e-mail to submit CBI or information protected by statute.

1. *Electronically*. If you submit an electronic comment as prescribed in this unit, EPA recommends that you include your name, mailing address, and an e-mail address or other contact information in the body of your comment. Also, include this contact information on the outside of any disk or CD ROM you submit, and in any cover letter accompanying the disk or CD ROM. This ensures that you can be identified as the submitter of the comment and allows EPA to contact you in case EPA cannot read your comment due to technical difficulties or needs further information on the substance of your comment. EPA's policy is that EPA will not edit your comment, and any identifying or contact information provided in the body of a comment will be included as part of the comment that is placed in the official public docket, and made available in EPA's electronic public docket. If EPA cannot read your comment due to technical difficulties and cannot contact you for clarification, EPA may not be able to consider your comment.

i. *EPA Dockets*. Your use of EPA's electronic public docket to submit comments to EPA electronically is EPA's preferred method for receiving comments. Go directly to EPA Dockets at *http://www.epa.gov/edocket/*, and follow the online instructions for submitting comments. Once in the system, select ''search,'' and then key in docket ID number OPP–2004–0223. The system is an ''anonymous access'' system, which means EPA will not know your identity, e-mail address, or other contact information unless you provide it in the body of your comment.

ii. *E-mail*. Comments may be sent by e-mail to *opp-docket@epa.gov*, Attention: Docket ID number OPP–2004–0223. In contrast to EPA's electronic public docket, EPA's e-mail system is not an ''anonymous access'' system. If you send an e-mail comment directly to the docket without going through EPA's electronic public docket, EPA's e-mail system automatically captures your e-mail address. E-mail addresses that are automatically captured by EPA's e-mail system are included as part of the comment that is placed in the official public docket, and made available in EPA's electronic public docket.

iii. *Disk or CD ROM*. You may submit comments on a disk or CD ROM that you mail to the mailing address identified in Unit I.C.2. These electronic submissions will be accepted in WordPerfect or ASCII file format. Avoid the use of special characters and any form of encryption.

2. *By mail*. Send your comments to: Public Information and Records Integrity Branch (PIRIB) (7502C), Office of Pesticide Programs (OPP), Environmental Protection Agency, 1200 Pennsylvania Ave., NW., Washington, DC 20460–0001, Attention: Docket ID number OPP–2004–0223.

3. *By hand delivery or courier*. Deliver your comments to: Public Information and Records Integrity Branch (PIRIB), Office of Pesticide Programs (OPP), Environmental Protection Agency, Rm. 119, Crystal Mall #2, 1801 South Bell St., Arlington, VA, Attention: Docket ID number OPP–2004–0223. Such deliveries are only accepted during the docket's normal hours of operation as identified in Unit I.B.1.

D. How Should I Submit CBI to the Agency?

Do not submit information that you consider to be CBI electronically through EPA's electronic public docket or by e-mail. You may claim information that you submit to EPA as CBI by marking any part or all of that information as CBI (if you submit CBI on disk or CD ROM, mark the outside of the disk or CD ROM as CBI and then identify electronically within the disk or CD ROM the specific information that is CBI). Information so marked will not be disclosed except in accordance with procedures set forth in 40 CFR part 2.

In addition to one complete version of the comment that includes any information claimed as CBI, a copy of the comment that does not contain the information claimed as CBI must be submitted for inclusion in the public docket and EPA's electronic public docket. If you submit the copy that does not contain CBI on disk or CD ROM, mark the outside of the disk or CD ROM clearly that it does not contain CBI. Information not marked as CBI will be included in the public docket and EPA's electronic public docket without prior notice. If you have any questions about CBI or the procedures for claiming CBI, please consult the person listed under **FOR FURTHER INFORMATION CONTACT**.

E. What Should I Consider as I Prepare My Comments for EPA?

You may find the following suggestions helpful for preparing your comments:

1. Explain your views as clearly as possible.
2. Describe any assumptions that you used.
3. Provide copies of any technical information and/or data you used that support your views.
4. If you estimate potential burden or costs, explain how you arrived at the estimate that you provide.
5. Provide specific examples to illustrate your concerns.
6. Make sure to submit your comments by the deadline in this notice.
7. To ensure proper receipt by EPA, be sure to identify the docket ID number assigned to this action in the subject line on the first page of your response. You may also provide the name, date, and **Federal Register** citation.

II. What Action is the Agency Taking?

EPA has received a pesticide petition as follows proposing the establishment and/or amendment of regulations for residues of a certain pesticide chemical in or on various food commodities under section 408 of the Federal Food, Drug, and Cosmetic Act (FFDCA), 21 U.S.C. 346a. EPA has determined that this petition contains data or information regarding the elements set forth in FFDCA section 408(d)(2); however, EPA has not fully evaluated the sufficiency of the submitted data at this time or whether the data support granting of the petition. Additional data may be needed before EPA rules on the petition.

List of Subjects

Environmental protection, Agricultural commodities, Feed additives, Food additives, Pesticides and pests, Reporting and recordkeeping requirements.

Dated: August 30, 2004.

Donald R. Stubbs,

Acting Director, Registration Division, Office of Pesticide Programs.

Summary of Petition

The petitioner's summary of the pesticide petition is printed below as required by FFDCA section 408(d)(3). The summary of the petition was prepared by Nippon Soda Company, Ltd., and represents the view of the petitioner. The petition summary announces the availability of a description of the analytical methods available to EPA for the detection and measurement of the pesticide chemical residues or an explanation of why no such method is needed.

Nippon Soda Company

PP 4F6833

EPA has received a pesticide petition (PP 4F6833) from Nippon Soda Co., Ltd. c/o Nisso America Inc., 220 East 42nd

Street, Suite 3002, New York, NY, 10017. This petition proposes, pursuant to Section 408(d) of the FFDCA, 21 U.S.C. 346a(d), to amend 40 CFR part 180 by establishing tolerances for the residues of acetamiprid in/on cucurbits, stone fruit, and tree nuts as given below. The proposed analytical method is by LC/MS/MS.

Pursuant to section 408(d)(2) of the FFDCA, as amended by the Food Quality Protection Act (FQPA), Nippon Soda Co., Ltd. has submitted the following summary of information, data and rationales in support of their pesticide petition and authorization for the summary to be published in the **Federal Register** in a notice of receipt of the petition. This summary was prepared by Nippon Soda Co., Ltd.; EPA is in the process of evaluating the petition and has not determined whether the data supports granting of the petition. EPA may have made minor edits to the summary for the purpose of clarity.

A. Residue Chemistry

1. *Plant metabolism.* The metabolism of acetamiprid in plants is well understood, having been investigated in eggplant, apples, cabbage, carrots, and cotton. Metabolism in plants primarily involves demethylation of the N-methyl group with subsequent hydrolysis of the acetamidine function to give the N-acetyl compound. This compound is then hydrolyzed to the corresponding amine followed by oxidation to the alcohol and acid. Conjugation of the alcohol with glucose is also significant. Degradation of the side chain without loss of the N-methyl group is seen in carrots since this is the major metabolic route in soil.

2. *Analytical method.* Based upon the metabolism of acetamiprid in plants and the toxicology of the parent and metabolites, quantification of the parent acetamiprid is sufficient to determine toxic residues. As a result a method has been developed which involves extraction of acetamiprid from crops with methanol, filtration, partitioning and cleanup, and analysis by LC/MS/MS methods. The limit of quantification (LOQ) for the method is 0.01 ppm and the method limit of detection (LOD) is 0.003-0.004 ppm for cucurbits, stone fruit, almond and pecan nutmeat. The LOQ and LOD for almond hulls is 0.02 ppm and 0.006 ppm, respectively.

3. *Magnitude of residues.* Magnitude of residue studies were conducted in cucumber, cantaloupe, and squash as the representative commodities for the cucurbit crop grouping. Trials were conducted in all of the major use areas for each of the crops as specified in the Residue Chemistry Guidelines OPPTS 860.1500 with applications at the maximum label use rate for each crop. As a result of the field trials the following tolerance is proposed for the commodities in the cucurbit crop group: 0.5 ppm.

Magnitude of residue studies were conducted in peach, plum (fresh and dried), sweet cherry, and tart cherry as the representative commodities for the stone fruit crop grouping. Trials were conducted in all of the major use areas for each of the crops as specified in the Residue Chemistry Guidelines OPPTS 860.1500 with applications at the maximum label use rate for each crop. As a result of the field trials, the following tolerance is proposed for the commodities in the stone fruit crop group except plum, prune, fresh and dried: 1.2 ppm. The proposed tolerance for plum, prune, fresh and dried is 0.3 ppm.

Magnitude of residue studies were conducted in almonds and pecans as the representative commodities for the tree nut crop grouping. Trials were conducted in all of the major use areas for each of the crops as specified in the Residue Chemistry Guidelines OPPTS 860.1500 with applications at the maximum label use rate for each crop. As a result of the field trials, the following tolerance is proposed for the commodities in the tree nut crop group except almond hulls: 0.1 ppm. The proposed tolerance for almond hulls is 5.0 ppm.

B. Toxicological Profile

1. *Acute toxicity for technical acetamiprid.* The acute oral LD_{50} for acetamiprid was 146 milligrams/kilogram (mg/kg) for female Sprague-Dawley rats and 217 for male rats. The acute dermal LD_{50} for acetamiprid was greater than 2,000 mg/kg in rats. The acute 4–hour inhalation LC_{50} for acetamiprid was greater than 1.15 milligrams/Liter (mg/L), the highest attainable concentration. Acetamiprid was not irritating to the eyes or skin and was not considered to be a sensitizing agent. The no observed effect level (NOEL) for acute neurotoxicity was 10 mg/kg and no evidence of neuropathy was noted.

Acute toxicity for formulated acetamiprid 70WP. The acute oral LD_{50} for acetamiprid 70WP was 944 mg/kg for female Sprague-Dawley rats and 1,107 mg/kg for male rats. The acute dermal LD_{50} for formulated acetamiprid was greater than 2,000 mg/kg in rats. The acute inhalation LC_{50} (4–hour) for Acetamiprid 70WP was determined to be greater than 2.88 mg/L, the highest attainable concentration. Acetamiprid 70WP was concluded to be a mild eye irritant and slight skin irritant. There were no indications of skin sensitization for the formulated product.

2. *Genetic toxicity for technical acetamiprid.* Based on the weight of the evidence provided by a complete test battery, acetamiprid is neither mutagenic nor genotoxic. The compound was found to be devoid of mutagenic activity (with and without metabolic activation) in *Salmonella typhimurium* and *E. coli* (Ames assay). Acetamiprid was also not mutagenic in an *in vitro* mammalian cell gene mutation assay on Chinese hamster ovary (CHO) cells (HPRT locus, with and without metabolic activation). Acetamiprid did not induce unscheduled DNA synthesis (UDS) in either rat liver primary cell cultures or in mammalian liver cells *in vivo*. In an *in vitro* chromosomal aberration study using CHO cells, acetamiprid was positive when tested under metabolic activation at cytotoxic dose levels; no effect was detected without metabolic activation. Acetamiprid was non-clastogenic in an *in vivo* chromosomal aberration study in rat bone marrow. It also was negative in an *in vivo* mouse bone marrow micronucleus assay.

3. *Reproductive and developmental toxicity.* In the multi-generation rat reproduction study a NOEL of 100 ppm was established based on decreased body weight gains and a reproduction NOEL of 800 parts per million (ppm) highest dose tested (HDT) was established for reproductive performance and fertility. In the rat teratology study the developmental NOEL was 50 mg/kg/day (maternal NOEL of 16 mg/kg/day based on decreased body weight and food consumption) and in the rabbit teratology study the developmental NOEL was 30 mg/kg/day (maternal NOEL of 15 mg/kg/day based on decreased body weight and food consumption). In both the rat and rabbit studies there were no fetotoxic or teratogenic findings.

A developmental neurotoxicity study in rats with acetamiprid was conducted. The test article was administered orally by gavage to Crl:CD(SD)IGS BR rats once daily from gestation day 6 through lactation day 21 inclusive at dosage levels of 2.5, 10, and 45 mg/kg/day. One female in the 45 mg/kg/day group died during parturition on gestation day 23, following delivery of one pup. All other females survived to the scheduled necropsies. No adverse clinical signs were noted. F0 maternal toxicity was expressed at a dose level of 45 mg/kg/day by a single mortality and reductions in body weight gain and food

consumption. No maternal toxicity was exhibited at dose levels of 2.5 and 10 mg/kg/day. F_1 developmental toxicity was expressed at a dose level of 45 mg/kg/day by early postnatal mortality and reduced post-weaning body weights. No developmental toxicity was exhibited at dose levels of 2.5 and 10 mg/kg/day. Deficits in auditory startle response occurred in the 45 mg/kg/day group F_1 males and females without concomitant effects in other functional endpoints (FOB), neuropathology or brain morphometry. Based on the results of this study, the no observed adverse effect level (NOAEL) for maternal toxicity, developmental toxicity and developmental neurotoxicity is considered to be 10 mg/kg/day.

4. *Subchronic toxicity.* In the 3–month dog feeding study a NOEL of 800 parts per million (ppm) (32 mg/kg/day for both males and females) was established based on growth retardation and decreased food consumption.

In the 3–month rat feeding study a NOEL of 200 ppm (12.4 and 14.6 mg/kg/day respectively for male and female rats) was established based on liver cell hypertrophy at a dose of 800 ppm.

In the 3–month mouse feeding study a NOEL of 400 ppm (53.2 and 64.6 mg/kg/day respectively for male and female mice) was established based on increased liver/body weight ratio and decreased cholesterol in females at 800 ppm.

A 13–week dietary neurotoxicity study for acetamiprid established a NOEL of 200 ppm (14.8 and 16.3 mg/kg for male and female rats) based on reduced body weight and food consumption decreases at 800 ppm. There was no evidence of neurotoxicity.

A 21–day dermal study in rabbits at dose levels up to 1,000 mg/kg/day caused no systemic toxicity, dermal irritation or histomorphological lesions in either sex tested.

5. *Chronic toxicity.* In the 1–year dog study, the NOEL was established at 600 ppm (20 and 21 milligrams/kilogram/day (mg/kg/day) for male and female dogs, respectively) based on growth retardation and decreased food consumption at a dose of 1,500 ppm.

In the 18–month mouse study the NOEL was established at 130 ppm (20.3 and 25.2 mg/kg/day for male and female mice) based on growth retardation and hepatic toxicity at 400 ppm. In the 2–year rat study the NOEL was 160 ppm (7.1 and 8.8 mg/kg/day for male and female rats) based on growth retardation and hepatic toxicity. There were no indications of carcinogenicity in either the rat or mouse chronic studies.

6. *Animal metabolism.* The metabolism of acetamiprid is well understood and the primary animal metabolite is IM–2–1.

7. *Metabolite toxicology.* Testing of IM–2–1 demonstrated that it is significantly less toxic than the parent acetamiprid and it is not being considered as part of the total toxic residue in plants, therefore, no tolerance is being requested by the registrant. The acute oral LD_{50} of IM–2–1 is 2,543 mg/kg for male rats and 1,762 mg/kg for female rats.

8. *Endocrine disruption.* Acetamiprid does not belong to a class of chemicals known or suspected of having adverse effects on the endocrine system. Developmental toxicity studies in rats and rabbits and a reproductive study in rats gave no indication that acetamiprid has any effects on endocrine function. The chronic feeding studies also did not show any long-term effects related to endocrine systems.

C. Aggregate Exposure

1. *Dietary exposure.* Acute and chronic dietary analyses were conducted to estimate exposure to potential acetamiprid residues in or on the following crops: Cole crop group, citrus crop group, fruiting vegetable crop group, pome fruit crop group, grapes, leafy vegetables, canola oil, mustard seed, cotton, tuberous and corm vegetable crop group, cucurbit crop group, stone fruit crop group, and tree nut crop group using the DEEM™ FCID software. Exposure estimates to drinking water were made based on conservative tier 1 FIRST and SCIGROW modeling.

2. *Food.* The acute dietary exposure estimates at the 99.9th percentile for the U.S. population was calculated to be 6.2% of the acute reference dose (aRfD)f. The population subgroup with the highest exposure was children, 1–2 years old at 19.6% of the aRfD. The acute RfD was based on the NOEL of 10 mg/kg/day in the acute neurotoxicity study in rats. Chronic dietary exposure estimates from residues of acetamiprid and the animal metabolite for the U.S. population was 0.1% of the chronic population adjusted dose (cPAD). The subpopulation with the highest exposure was children 1–2 with 0.6% of the cPAD used. These values are based on projected percentages for percent of crop treated and field trial residues at maximum label rates and minimum pre-harvest interval (PHI) with no reduction factors for common washing, cooking, or preparation practices. These can be considered conservative values. The cPAD was based on the NOEL of 7.1 mg/kg/day in the chronic rat study and, an uncertainty factor of 100 to account for inter-species and intra-species variations. In the final rule establishing tolerances for acetamiprid on canola and mustard, (September 3, 2003, 68 FR 52343; FRL–7324–1), EPA concluded that a data base uncertainty factor (e.g., FQPA factor) was not needed to account for the lack of a developmental neurotoxicity study with acetamiprid and that reliable data supported removing the additional safety factor (e.g., additional 3–fold or 3X) for the protection of infants and children. Since that time, an oral exposure developmental neurotoxicity study in the rat was conducted with acetamiprid and submitted to EPA. Based on the results of this and other developmental toxicology studies, the inclusion of an additional FQPA uncertainty factor is unwarranted.

3. *Drinking water.* EPA's draft Standard Operating Procedure (SOP) for incorporating estimates of drinking water exposure into aggregate risk assessments was used to perform the drinking water analysis for acetamiprid. This SOP utilizes a variety of tools to conduct drinking water assessments. These tools include water models such as SCI-GROW, first index reservoir screening tool (FIRST), PRZM/EXAMS, and monitoring data. If monitoring data are not available then the models are used to predict potential residues in surface water and ground water. In the case of acetamiprid, monitoring data do not exist, therefore, FIRST and SCIGROW models were used to estimate acetamiprid residues in surface and ground water, respectively. The short-term were greater than 2,000 parts per bilion (ppb) while the modeled drinking water estimated concentration (DWEC) was 17 ppb for surface water and 0.0008 ppb for ground water. The intermediate-term DWLOCs were also greater than 2,000 ppb while the modeled DWEC was 4 ppb for surface water and 0.0008 ppb for ground water. The modeled DWEC surface and ground water residues were less than the calculated DWLOCs for short-term and intermediate-term exposures for all adults and toddlers (1–2 years old).

4. *Non-dietary exposure.* A ready to use, dilute formulation of acetamiprid is registered for insect control on outdoor ornamentals, vegetables and fruit trees. Based on surrogate exposure data obtained from a carbaryl study, the homeowner MOE was calculated to exceed ten million. Postapplication exposure resulting from contact with acetamiprid treated foliage resulted in an MOE in excess of 500,000. Additionally a pending use allowing residential applications of formulated acetamiprid both indoors and outdoors resulted in short-term applicator

exposure MOEs of greater than 1,500 and short-term post-application exposure MOEs of greater than 2,000 for adult and toddler exposure scenarios. For intermediate-term post-application exposure following indoor applications, the MOEs for toddlers and adults were greater than 2,500. Short-term and intermediate-term aggregate exposure assessments were conducted using EPA's Draft Guidance for Performing Aggregate Exposure and Risk Assessments which suggests using the total MOE method for aggregating exposures. In the case of acetamiprid, an MOE greater than 100 provides a reasonable certainty that no harm will occur from the assessed uses. Using the total MOE method for aggregating exposures, adults had the lowest MOE estimates in the short-term aggregate assessment while toddlers had the lowest MOE estimates in the intermediate-term aggregate assessment. All short-term aggregate MOEs were greater than 900 and all intermediate-term aggregate MOEs were greater than 2,000. Therefore, there is reasonable certainty that no harm will result from aggregate (food, drinking water, and residential) exposure to acetamiprid residues.

D. Cumulative Effects

A determination has not been made that acetamiprid has a common mechanism of toxicity with other substances. Acetamiprid does not appear to produce a common toxic metabolite with other substances. A cumulative risk assessment was therefore not performed for this analysis.

E. Safety Determination

1. *U.S. population.* Using the conservative assumptions described above and, based on the completeness and reliability of the toxicity data, it is concluded, that aggregate exposure from the existing and proposed uses of acetamiprid will utilize at most 6.2% of the acute reference dose (aRfD) at the 99.9 percentile of exposure and 0.1% of the chronic population adjusted dose (cPAD) for the U.S. population. These percentages are likely to be much less, as more realistic exposure data and models are developed. EPA generally has no concern for exposures below 100% of the aRfD and cPAD. Drinking water levels of comparison (DWLOCs) based on these is exposure estimates are much greater than conservative estimated concentrations, and would be expected to be well below the 100% level, if they occur at all. Existing and pending uses allowing residential applications of acetamiprid both indoors and outdoors resulted in short-term applicator exposure MOEs of greater than 1,500 and short-term post-application exposure MOEs of greater than 2,000 for adult and toddler exposure scenarios. For intermediate-term post-application exposure following indoor applications, the MOEs for adults and toddlers were greater than 2,500. Therefore, there is a reasonable certainty that no harm will occur to the U.S. population from aggregate exposure to acetamiprid.

2. *Infants and children.* In multi-generation reproduction and teratology studies, no adverse effects on reproduction were observed in either rats or rabbits. In the long term feeding studies in rats and mice there was no evidence of carcinogenicity. Acetamiprid was not mutagenic under the conditions of testing. There is no indication of developmental neurotoxicity associated with acetamiprid. Using the conservative assumptions described in the exposure section above, the percent of the acute reference dose (aRfD) that will be used is 19.6% for children 1–2 years old (the most highly exposed sub-group) at the 99.9 percentile of exposure and 0.6% of the chronic population adjusted dose (cPAD). As in the adult situation, drinking water levels of comparison are much higher than the worst case drinking water estimated concentrations and would be expected to use well below 100% of the RfD, if they occur at all. MOEs resulting from post-application exposure to acetamiprid in residential areas are greater than 2,000. Therefore, there is a reasonable certainty that no harm will occur to infants and children from aggregate exposure to residues of acetamiprid.

F. International Tolerances

Acetamiprid is registered for use on food crops in several countries outside the United States.

[FR Doc. 04–20680 Filed 9–14–04; 8:45 am]

BILLING CODE 6560–50–S

DEPARTMENT OF ENERGY

Office of Fossil Energy; National Petroleum Council

AGENCY: Department of Energy.

ACTION: Notice of open meeting.

This notice announces a meeting of the National Petroleum Council. Federal Advisory Committee Act (Pub. L. 92–463, 86 Stat. 770) requires that notice of these meetings be announced in the **Federal Register**.

DATES: Thursday, September 30, 2004, 9 a.m.–12 p.m.

ADDRESSES: The Westin Embassy Row Hotel, 2100 Massachusetts Ave., NW., Washington, DC.

FOR FURTHER INFORMATION CONTACT: James Slutz, U.S. Department of Energy, Office of Fossil Energy, Washington, DC 20585. Phone: 202–586–5600.

SUPPLEMENTARY INFORMATION: *Purpose of the Committee:* To provide advice, information, and recommendations to the Secretary of Energy on matters relating to oil and gas or the oil and gas industry.

Tentative Agenda:

- Call to Order and Introductory Remarks
- Remarks by the Honorable E. Spencer Abraham, Secretary of Energy
- Consideration of the Council's Response to the Secretary's Request for Advice on Petroleum Refining and Inventory Matters
- Administrative Matters
- Discussion of Any Other Business Properly Brought Before the National Petroleum Council
- Adjourn

Public Participation: The meeting is open to the public. The chairperson of the Council is empowered to conduct the meeting in a fashion that will facilitate the orderly conduct of business. Any member of the public who wishes to file a written statement to the Council will be permitted to do so, either before or after the meeting. Members of the public who wish to make oral statements pertaining to agenda items should contact James Slutz at the address or telephone number listed above. Request must be received at least five days prior to the meeting and reasonable provisions will be made to include the presentation on the agenda.

Transcripts: Available for public review and copying at the Public Reading Room, Room 1E–190, Forrestal Building, 1000 Independence Avenue, SW., Washington, DC, between 9 a.m. and 4 p.m., Monday through Friday, except Federal holidays.

Issued at Washington, DC, on September 10, 2004.

Rachel Samuel,

Deputy Advisory Committee, Management Officer.

[FR Doc. 04–20779 Filed 9–14–04; 8:45 am]

BILLING CODE 6450–01–P

FEDERAL COMMUNICATIONS COMMISSION

Notice of Public Information Collection(s) Being Reviewed by the Federal Communications Commission for Extension Under Delegated Authority, Comments Requested

September 9, 2004.

SUMMARY: The Federal Communications Commission, as part of its continuing effort to reduce paperwork burden invites the general public and other Federal agencies to take this opportunity to comment on the following information collection(s), as required by the Paperwork Reduction Act (PRA) of 1995, Public Law 104–13. An agency may not conduct or sponsor a collection of information unless it displays a currently valid control number. No person shall be subject to any penalty for failing to comply with a collection of information subject to the Paperwork Reduction Act that does not display a valid control number. Comments are requested concerning: (a) Whether the proposed collection of information is necessary for the proper performance of the functions of the Commission, including whether the information shall have practical utility; (b) the accuracy of the Commission's burden estimate; (c) ways to enhance the quality, utility, and clarity of the information collected; and (d) ways to minimize the burden of the collection of information on the respondents, including the use of automated collection techniques or other forms of information technology.

DATES: Written Paperwork Reduction Act (PRA) comments should be submitted on or before November 15, 2004. If you anticipate that you will be submitting comments, but find it difficult to do so within the period of time allowed by this notice, you should advise the contact listed below as soon as possible.

ADDRESSES: Direct all Paperwork Reduction Act (PRA) comments to Les Smith, Federal Communications Commission, Room 1–A804, 445 12th Street, SW., Washington, DC 20554 or e-mail *Leslie.Smith@fcc.gov*.

FOR FURTHER INFORMATION CONTACT: For additional information or copies of the information collection(s), contact Les Smith at (202) 418–0217 or e-mail *Leslie.Smith@fcc.gov*.

SUPPLEMENTARY INFORMATION:

OMB Control Number: 3060–0665.

Title: Section 64.707, Public Dissemination of Information by Providers of the Operator Services.

Form Number: N/A.

Type of Review: Extension of a currently approved collection.

Respondents: Business or other for-profit entities.

Number of Respondents: 436.

Estimated Time per Response: 4 hours (avg).

Frequency of Response: On occasion reporting requirement; Third party disclosure.

Total Annual Burden: 1,744 hours.

Total Annual Cost: None.

Privacy Impact Assessment: No impact(s).

Needs and Uses: As required by 47 U.S.C. Section 226(d)(4)(b), 47 CFR Section 64.707 provides that operator service providers must regularly publish and make available upon request from consumers written materials that describe any changes in operator services and choices available to consumers. Consumers use the information to increase their knowledge of the choices available to them in the operator services marketplace.

OMB Control Number: 3060–0973.

Title: Section 64.1120 (e)—Sale of Transfer of Subscriber Base to Another Carrier, CC Dockets 00–257 and 94–129.

Form Number: N/A.

Type of Review: Extension of a currently approved collection.

Respondents: Business or other for-profit entities.

Number of Respondents: 75.

Estimated Time per Response: 6 hours (avg).

Frequency of Response: On occasion reporting requirement; third party disclosure.

Total Annual Burden: 450 hours.

Total Annual Cost: None.

Privacy Impact Assessment: No impact(s).

Needs and Uses: Pursuant to 47 CFR 64.1120 (e), an acquiring carrier will self-certify to the Commission, in advance of the transfer, that the carrier will comply with the required procedures, including giving advance notice to the affected subscribers in a manner that ensures the protection of their interests. By streamlining the carrier change rules, the Commission will continue to protect consumers' interests and, at the same time, will ensure that its rules do not inadvertently inhibit routine business transactions. On July 16, 2004, the Commission released a *First Order on Reconsideration and Fourth Order on Reconsideration* which made a minor modification to 47 CFR 64.1120 (e) (iii).

The modification in the rule does not impose any new or modified information collection requirements. Also, the modification does not affect the existing annual hourly and cost changes.

Federal Communications Commission.

Marlene H. Dortch,

Secretary.

[FR Doc. 04–20790 Filed 9–14–04; 8:45 am]

BILLING CODE 06712–10–P

FEDERAL COMMUNICATIONS COMMISSION

[MB Docket No. 04–228; DA 04–2906]

Elimination of Market Entry Barriers for Small Telecommunications Businesses and Allocations of Spectrum-Based Services for Small Businesses and Businesses Owned by Women and Minorities

AGENCY: Federal Communications Commission.

ACTION: Notice, extension of comment period.

SUMMARY: In this document, the Media Bureau extends the period for comment and reply comment in this proceeding that seeks comment on constitutionally permissible ways for the Commission to further its legislative mandate to identify and eliminate market entry barriers for small telecommunications businesses and to further opportunities in the allocation of spectrum-based services for small businesses and businesses owned by women and minorities. The deadline to file comments is extended from September 10, 2004, to October 12, 2004, and the deadline to file reply comments is extended from October 8, 2004, to November 8, 2004. The action is taken to respond to a Motion for Extension of Time.

DATES: Comments are due on or before October 12, 2004, and reply comments are due on or before November 8, 2004.

ADDRESSES: Federal Communications Commission, Portals II, 445 12th Street, SW., Washington, DC 20554.

FOR FURTHER INFORMATION CONTACT: Julie Salovaara, Industry Analysis Division, Media Bureau, (202) 418–2330 or *Julie.Salovaara@fcc.gov*.

SUPPLEMENTARY INFORMATION: This is a synopsis of the Commission's Public Notice, DA–04–2906, in MB Docket No. 04–228, released on September 8, 2004. The full text of this Public Notice is available for inspection and copying during regular business hours in the FCC Reference Center, 445 Twelfth Street, SW., Room CY–A257, Portals II, Washington, DC 20554, and may also be purchased from the Commission's copy contractor, Best Company and Printing,

Inc., Room CY–B402, telephone (800) 378–3160, *http://www.bcpiweb.com*. To request materials in accessible formats for people with disabilities (electronic files, large print, audio format and Braille), send an e-mail to *fcc504@fcc.gov* or call the Consumer & Governmental Affairs Bureau at (202) 418–0531 (voice), 418–7365 (TTY).

On June 15, 2004, the Media Bureau (''Bureau'') released a Public Notice seeking comment on constitutionally permissible ways to further the mandates of section 257 of the Telecommunications Act of 1996, 47 U.S.C. 257, which directs the Commission to identify and eliminate market entry barriers for small telecommunications businesses, and section 309(j) of the Communications Act of 1934, as amended, 47 U.S.C. 309(j), which requires the Commission to further opportunities in the allocation of spectrum-based services for small businesses and businesses owned by women and minorities.[1] The deadlines to file comments and reply comments were originally set as July 22, 2004, and August 6, 2004, respectively.[2] At the request of the Minority Media and Telecommunications Council (''MMTC''), the Bureau extended the comment deadline to September 10, 2004, and the reply comment deadline to October 8, 2004.[3]

MMTC now requests that these deadlines be further extended to October 10, 2004, for comments and to November 8, 2004, for reply comments.[4] MMTC states that the three consultants it has engaged to assist with MMTC's comments need more time to complete their research and analyses, as the task has proved more complex than originally believed. Given the complexity of the legal issues involved, the heightened constitutional standards that apply, and our consequent interest in obtaining a rigorous and comprehensive analysis, we believe that granting MMTC's request for more time will serve the public interest. The new deadline to file comments will be October 12, 2004, and the new deadline to file reply comments will be November 8, 2004.[5]

[1] 69 FR 34672, June 22, 2004.

[2] *Comment and Reply Comment Dates Set for Comments on Ways to Further Section 257 Mandate and to Build on Earlier Studies,* Public Notice, MB Docket No. 04–228, DA 04–1758 (MB June 22, 2004).

[3] 69 FR 42996, July 19, 2004.

[4] MMTC Motion for Further Extension of Time (Sept. 7, 2004).

[5] We are extending the comment deadline to October 12, 2004, because the date requested by MMTC, October 10, 2004, is a Sunday, and October 11, 2004, is a Federal holiday.

Federal Communications Commission.

Thomas L. Horan,

Legal Advisor, Media Bureau.

[FR Doc. 04–20904 Filed 9–14–04; 8:45 am]

BILLING CODE 6712–01–P

FEDERAL MARITIME COMMISSION

Notice of Agreements Filed

The Commission hereby gives notice of the filing of the following agreements under the Shipping Act of 1984. Interested parties may obtain copies of agreements by contacting the Commission's Office of Agreements at 202–523–5793 or via e-mail at *tradeanalysis@fmc.gov*. Interested parties may submit comments on an agreement to the Secretary, Federal Maritime Commission, Washington, DC 20573, within 10 days of the date this notice appears in the **Federal Register**.

Agreement No.: 011834–001.

Title: Maersk Sealand/Hapag-Lloyd/Mediterranean U.S. East Coast Slot Charter Agreement.

Parties: A.P. Moller Maersk A/S and Hapag-Lloyd Container Linie GmbH.

Filing Party: Wayne R. Rohde, Esq.; Sher & Blackwell; 1850 M Street, NW.; Suite 900; Washington, DC 20036.

Synopsis: The amendment adds the trade from the U.S. East Coast to Italian ports in the Gioia Tauro to Genoa range to the geographic scope of the agreement.

Agreement No.: 011852–010.

Title: Maritime Security Discussion Agreement.

Parties: American President Lines, Ltd.; APL Co. Pte Ltd.; Australia–New Zealand Direct Line; China Shipping Container Lines, Co., Ltd.; Canada Maritime; CMA CGM, S.A.; Contship Container Lines; COSCO Container Lines Company, Ltd.; CP Ships (UK) Limited; Evergreen Marine Corp.; Hanjin Shipping Company, Ltd.; Hapag Lloyd Container Linie GmbH; Hyundai Merchant Marine Co., Ltd.; Italia di Navigazione, LLC; Kawasaki Kisen Kaisha Ltd.; Lykes Lines Limited, LLC; Mitsui O.S.K. Lines, Ltd.; Nippon Yusen Kaisha; Orient Overseas Container Line Limited; P&O Nedlloyd Limited; TMM Lines Limited, LLC; Yang Ming Marine Transport Corp.; Zim Israel Navigation Co., Ltd.; Alabama State Port Authority; APM Terminals North America, Inc.; Ceres Terminals, Inc.; Cooper/T. Smith Stevedoring Co., Inc.; Eagle Marine Services Ltd.; Global Terminal & Container Services, Inc.; Howland Hook Container Terminal, Inc.; Husky Terminal & Stevedoring, Inc.; International Shipping Agency; International Transportation Service, Inc.; Lambert's Point Docks Inc.; Long Beach Container Terminal, Inc.; Maersk Pacific Ltd.; Maher Terminals, Inc.; Marine Terminals Corp.; Maryland Port Administration; Massachusetts Port Authority; Metropolitan Stevedore Co.; P&O Ports North American, Inc.; Port of Tacoma; South Carolina State Ports Authority; Stevedoring Services of America, Inc.; Trans Bay Container Terminal, Inc.; TraPac Terminals; Universal Maritime Service Corp.; Virginia International Terminals; and Yusen Terminals, Inc.

Filing Parties: Carol N. Lambos; Lambos & Junge; 29 Broadway, 9th Floor; New York, NY 10006 and Charles T. Carroll, Jr.; Carroll & Froelich, PLLC; 2011 Pennsylvania Avenue, NW.; Suite 301; Washington, DC 20006.

Synopsis: The amendment deletes Maersk Sealand and Safmarine as parties to the agreement.

Dated: September 10, 2004.

By Order of the Federal Maritime Commission.

Bryant L. VanBrakle,

Secretary.

[FR Doc. 04–20781 Filed 9–14–04; 8:45 am]

BILLING CODE 6730–01–P

FEDERAL RESERVE SYSTEM

Formations of, Acquisitions by, and Mergers of Bank Holding Companies

The companies listed in this notice have applied to the Board for approval, pursuant to the Bank Holding Company Act of 1956 (12 U.S.C. 1841 *et seq.*) (BHC Act), Regulation Y (12 CFR Part 225), and all other applicable statutes and regulations to become a bank holding company and/or to acquire the assets or the ownership of, control of, or the power to vote shares of a bank or bank holding company and all of the banks and nonbanking companies owned by the bank holding company, including the companies listed below.

The applications listed below, as well as other related filings required by the Board, are available for immediate inspection at the Federal Reserve Bank indicated. The application also will be available for inspection at the offices of the Board of Governors. Interested persons may express their views in writing on the standards enumerated in the BHC Act (12 U.S.C. 1842(c)). If the proposal also involves the acquisition of a nonbanking company, the review also includes whether the acquisition of the nonbanking company complies with the standards in section 4 of the BHC Act (12 U.S.C. 1843). Unless otherwise noted, nonbanking activities will be

conducted throughout the United States. Additional information on all bank holding companies may be obtained from the National Information Center website at *www.ffiec.gov/nic/*.

Unless otherwise noted, comments regarding each of these applications must be received at the Reserve Bank indicated or the offices of the Board of Governors not later than October 8, 2004.

A. Federal Reserve Bank of New York (Jay Bernstein, Bank Supervision Officer) 33 Liberty Street, New York, New York 10045–0001:

1. Excel Bancorp LLC, New York, New York to become a bank holding company by acquiring 96.93 percent of the voting shares of Excel Bank, National Association, New York, New York.

B. Federal Reserve Bank of Minneapolis (Jacqueline G. Nicholas, Community Affairs Officer) 90 Hennepin Avenue, Minneapolis, Minnesota 55480–0291:

1. First National Bancorp, Inc., Brewster, Minnesota; to become a bank holding company by acquiring 100 percent of the voting shares of Nobles Agency, Inc., Brewster, Minnesota, and thereby indirectly acquire voting shares of The First National Bank of Brewster, Brewster, Minnesota. Applicant also proposes through the acquisition of Nobles Agency, Inc., Brewster, Minnesota, to engage in insurance agency activities in a town with a population not exceeding 5,000, pursuant to section 225.28(b)(11)(iii)(A) of Regulation Y.

Board of Governors of the Federal Reserve System, September 9, 2004.

Robert deV. Frierson,

Deputy Secretary of the Board.

[FR Doc. 04–20733 Filed 9–14–04; 8:45 am]

BILLING CODE 6210–01–S

FEDERAL RESERVE SYSTEM

Formations of, Acquisitions by, and Mergers of Bank Holding Companies

The companies listed in this notice have applied to the Board for approval, pursuant to the Bank Holding Company Act of 1956 (12 U.S.C. 1841 *et seq.*) (BHC Act), Regulation Y (12 CFR Part 225), and all other applicable statutes and regulations to become a bank holding company and/or to acquire the assets or the ownership of, control of, or the power to vote shares of a bank or bank holding company and all of the banks and nonbanking companies owned by the bank holding company, including the companies listed below.

The applications listed below, as well as other related filings required by the Board, are available for immediate inspection at the Federal Reserve Bank indicated. The application also will be available for inspection at the offices of the Board of Governors. Interested persons may express their views in writing on the standards enumerated in the BHC Act (12 U.S.C. 1842(c)). If the proposal also involves the acquisition of a nonbanking company, the review also includes whether the acquisition of the nonbanking company complies with the standards in section 4 of the BHC Act (12 U.S.C. 1843). Unless otherwise noted, nonbanking activities will be conducted throughout the United States. Additional information on all bank holding companies may be obtained from the National Information Center website at *www.ffiec.gov/nic/*.

Unless otherwise noted, comments regarding each of these applications must be received at the Reserve Bank indicated or the offices of the Board of Governors not later than October 12, 2004.

A. Federal Reserve Bank of Atlanta (Sue Costello, Vice President) 1000 Peachtree Street, N.E., Atlanta, Georgia 30303:

1. United Community Banks, Inc., Blairsville, Georgia; to merge with Liberty National Bancshares, Inc., and thereby indirectly acquire voting shares of Liberty National Bank, both of Conyers, Georgia.

B. Federal Reserve Bank of Kansas City (Donna J. Ward, Assistant Vice President) 925 Grand Avenue, Kansas City, Missouri 64198–0001:

1. Country Bancshares, Inc., Jamesport, Missouri; to retain 9.14 percent of the voting shares of Branson Bancshares, Inc., and thereby indirectly retain voting shares of Branson Bank, both of Branson, Missouri.

Board of Governors of the Federal Reserve System, September 10, 2004.

Robert deV. Frierson,

Deputy Secretary of the Board.

[FR Doc. 04–20803 Filed 9–14–04; 8:45 am]

BILLING CODE 6210–01–S

FEDERAL RESERVE SYSTEM

Notice of Proposals to Engage in Permissible Nonbanking Activities or to Acquire Companies that are Engaged in Permissible Nonbanking Activities

The companies listed in this notice have given notice under section 4 of the Bank Holding Company Act (12 U.S.C. 1843) (BHC Act) and Regulation Y (12 CFR Part 225) to engage *de novo*, or to acquire or control voting securities or assets of a company, including the companies listed below, that engages either directly or through a subsidiary or other company, in a nonbanking activity that is listed in § 225.28 of Regulation Y (12 CFR 225.28) or that the Board has determined by Order to be closely related to banking and permissible for bank holding companies. Unless otherwise noted, these activities will be conducted throughout the United States.

Each notice is available for inspection at the Federal Reserve Bank indicated. The notice also will be available for inspection at the offices of the Board of Governors. Interested persons may express their views in writing on the question whether the proposal complies with the standards of section 4 of the BHC Act. Additional information on all bank holding companies may be obtained from the National Information Center website at *www.ffiec.gov/nic/*.

Unless otherwise noted, comments regarding the applications must be received at the Reserve Bank indicated or the offices of the Board of Governors not later than October 12, 2004.

A. Federal Reserve Bank of Cleveland (Cindy C. West, Banking Supervisor) 1455 East Sixth Street, Cleveland, Ohio 44101–2566:

1. Park National Corporation, Newark, Ohio; to acquire First Federal Bancorp, Inc., and thereby indirectly acquire First Federal Savings Bank of Eastern Ohio, both of Zanesville, Ohio, and thereby engage in operating a savings association, pursuant to section 225.28(b)(4)(ii) of Regulation Y.

Board of Governors of the Federal Reserve System, September 10, 2004.

Robert deV. Frierson,

Deputy Secretary of the Board.

[FR Doc. 04–20802 Filed 9–14–04; 8:45 am]

BILLING CODE 6210–01–S

FEDERAL TRADE COMMISSION

Email Authentication Summit

AGENCIES: The Federal Trade Commission (''FTC'' or the ''Commission'') and the National Institute of Standards and Technology (''NIST''), United States Department of Commerce.

ACTION: Notice announcing email authentication summit, request for comments, and solicitation of requests to participate.

DATES: The Email Authentication Summit will be held on November 9–10, 2004, from 8:30 a.m. to 5:30 p.m. at the Federal Trade Commission, Satellite

Building, 601 New Jersey Ave., NW., Washington, DC 20001. The event is open to the public, and there is no fee for attendance. Pre-registration is not required.

Comments: Written comments should be submitted on or before September 30, 2004. For further information, please see the ''Request for Comments'' section of this Notice.

Participants: Written Requests to Participate in the Email Authentication Summit must be filed by September 30, 2004. For further information, please see the ''Requests to Participate'' section of this Notice. Parties submitting Requests to Participate will be notified by October 15, 2004, if they have been selected.

ADDRESSES: Written comments should be identified as ''Email Authentication Summit-Comments,'' and written requests to participate in the Email Authentication Summit should be identified as ''Email Authentication Summit-Request to Participate.'' Written Comments and Requests to Participate should be submitted to: Secretary, Federal Trade Commission, Room 159–H (Annex V), 600 Pennsylvania Ave., NW., Washington, DC 20580. If submitting in paper form, parties must submit an original and three copies of each document. The FTC requests that any comment filed in paper form be sent by courier or overnight service, since U.S. postal mail in the Washington area and at the Commission is subject to delay due to heightened security precautions.

In the alternative, parties may email Comments and Requests to Participate to *authenticationsummit@ftc.gov*. To ensure that the Commission considers an electronic comment, you must file it with the FTC at this email address.

For further requirements concerning the filing of Comments and Requests to Participate, please see the Request for Comments and Requests to Participate sections of this Notice.

FOR FURTHER INFORMATION CONTACT: Sana D. Coleman, Attorney, (202) 326–2249. A detailed agenda and additional information on the Email Authentication Summit will be posted on the FTC's Website, *http://www.ftc.gov*, by November 7, 2004.

SUPPLEMENTARY INFORMATION:

Section A. Introduction

In the Commission's June 15, 2004 National Do Not Email Registry Report to Congress, the Commission explained that significant security, enforcement, practical, and technical challenges rendered a registry an ineffective solution to the spam problem.[1] The Report, however, identified domain-level authentication as a promising technological development that would enable Internet Service Providers (''ISPs'') and other domain holders to better filter spam, and that would provide law enforcement with a potent tool for locating and identifying spammers. The Report concluded that the Commission could play an active role in spurring the market's development, testing, evaluation, and deployment of domain-level authentication systems. As a first step, the Report explained that the Commission, with other relevant government agencies, would host an Email Authentication Summit in the Fall of 2004. This **Federal Register** Notice explains that the Commission and the Department of Commerce's National Institute of Standards and Technology (''NIST'') will be hosting the Summit on November 9–10, 2004, asks for comments on a number of issues concerning email authentication standards, and solicits requests to participate in the Summit.

Section B. Background

The Simple Mail Transfer Protocol (''SMTP''), the Internet protocol for the email system, allows information to travel freely with relative anonymity and ease. SMTP facilitates the proliferation of spam by making it possible and cost-efficient for illegitimate marketers to send spam to billions of email accounts worldwide, while allowing them to hide their identities and the origins of their email messages.

Spammers use many techniques to hide, including ''spoofing,'' open relays, open proxies, and ''zombie drones,'' including ''zombie nets.'' First, spammers use spoofing to falsify header information and hide their identities. This technique disguises an email to make it appear to come from an address other than the one from which it actually comes. A spammer can falsify portions of the header or the entire header. The SMTP system facilitates this practice because it does not require accurate routing information except for the intended recipient of the email. By failing to require accurate sender identification, SMTP allows spammers to send email without accountability, often disguised as personal email. A spammer can send out millions of spoofed messages, but any bounced messages—messages returned as undeliverable—or complaints stemming from the spoofed emails will only go to the person whose address was spoofed. The spammer never has to deal with them. As a result, an innocent email user's inbox may become flooded with undeliverable messages and angry, reactive email, and the innocent user's Internet service may be shut off due to the volume of complaints.

Second, many spammers use open relays to disguise the origin of their email. A computer must be connected to a mail server to send or receive mail. When someone sends an email message using an email server that is ''secure,'' the mail server's software checks to make sure that the sender's computer and email account are authorized to use that server. If this authorization is in order, then the server sends the email. If the computer and email account are not listed as authorized, the server refuses to accept and send the email message. On the other hand, if a mail server is not secure, *i.e.*, some of its settings allow it to stay open, it will forward email even though the sender is not an authorized user of that server. An open server is called an open relay because it will accept and transfer email on behalf of any user anywhere.

Spammers who use open relays effectively bypass the email servers to which their computers are connected. Once the spam passes through an open relay, a routing header from that server is added to the email. Thus, the email will appear as if it originated from the relay mail server. This allows spammers to obscure their tracks, making it difficult to trace the path their message takes from sender to recipient.

Third, many spammers use ''open proxies.'' They began doing this after ISPs and other mail server operators realized the negative impact of open relays and made efforts to identify and close them. Most organizations have multiple computers on their networks, but have a smaller number of proxy servers that are the only machines on the network that directly interact with the Internet. This system provides more efficient web browsing for the users within that organization and secures the organization's network against unauthorized Internet users from outside the organization. If the proxy is not configured properly, it is considered to be ''open,'' and may allow an unauthorized Internet user to connect through it to other hosts (computers that control communications in a network or administer databases) on the Internet.

Fourth, the most recent escalation in this cat-and-mouse game involves the exploitation of millions of home

[1] ''National Do Not Email Registry, A Report to Congress,'' by the Federal Trade Commission, June 2004. The Report is posted online at *http://www.ftc.gov/reports/dneregistry/report.pdf*.

computers, using malicious viruses, worms, or ''Trojans.'' These infections, often sent via spam, turn any computer into an open or compromised proxy called ''zombie drones.'' When large collections of zombie drones are under centralized command, they are called ''zombie nets.'' Once a computer is infected with one of these programs, a spammer can remotely hijack and send spam from that computer. Spammers target home computers with high speed Internet connections, such as DSL or cable modem lines, that are poorly secured. Spam sent via zombie drones will appear to originate (and actually will originate) from these infected computers. This practice is all the more pernicious because users often do not know that their home computers are infected. The outgoing spam does not show up in their outbox. Once an ISP realizes spam is coming from one of its customer's machines, the ISP must shut off the customer's Internet service even though the customer had no knowledge that the spammer was using his or her machine.

Obfuscatory techniques such as spoofing, open relays, open proxies, and zombie drones make it more difficult for ISPs to locate spammers. When ISPs and domain holders implement technologies designed to stop one exploitative technique, spammers quickly adapt, finding new methods to avoid detection. If the cloak of anonymity were removed, however, spammers could not operate with impunity. ISPs and domain holders could filter spam more effectively, and the government and ISPs could more effectively identify and prosecute spammers who violate the Controlling the Assault of Non-Solicited Pornography and Marketing Act of 2003 (the ''CAN–SPAM Act''), 15 U.S.C. 7708, or other statutes.[2]

To remove this cloak of anonymity, ISPs and others involved with the email system have proposed domain-level authentication systems—systems that would enable a receiving mail server to verify that an email message actually came from the sender's purported domain. In other words, if a message claimed to be from *abc@ftc.gov*, the private market authentication proposals would authenticate that the message came from the domain ''ftc.gov,'' but would not authenticate that the message came from the particular email address ''abc'' at this domain.

There are two well-publicized private market authentication proposals, ''Sender ID'' and ''DomainKeys.'' Sender ID, a combination of an earlier proposed authentication standard called SPF (''sender policy framework'') and Microsoft's ''Caller ID for Email,'' would require senders of email to list the IP addresses from which they send email in the domain name system (the ''DNS system''). Receiving servers would compare the IP addresses listed in a message's header with those listed in the DNS system to determine if the message was coming from an authenticated IP address.

DomainKeys uses public key/private key cryptography to authenticate email messages. A domain that sends email would create a public/private key pair and post the public key in the DNS system. For each message, the sending domain would generate a digital signature by applying the private key algorithm to the entire message. The sending domain would then add the digital signature in the message's header. The receiving mail server would then use the public key to verify that the digital signature was generated by the matching private key.

While Sender ID and DomainKeys are the best known of the proposed authentication standards, other participants in the email system have proposed or intend to propose other domain-level authentication standards. For example, this Fall, the Internet Engineering Task Force, the Internet's standards setting body, is expected to forward an SPF-modeled authentication standard to one of its internal committees, the Internet Engineering Steering Group, which will decide whether to accept any such SPF-based model as a proposed or experimental standard or send it back for revision.

To encourage the development, testing, evaluation and implementation of domain-level authentication systems, the Commission will conduct a two-day Email Authentication Summit. This Summit will be co-sponsored with NIST. The Summit will be held on November 9–10, 2004 in Washington, DC. The purpose of the Summit is to facilitate a discussion among technologists from ISPs, businesses and individuals who operate their own mail servers, computer scientists, and other interested parties regarding technological challenges of the various authentication proposals, the ability of small ISPs and domain holders to participate in the authentication systems, the costs associated with the various proposals, the international implications associated with the proposals, and other issues that impact the time frame for and viability and effectiveness of wide-scale adoption of domain-level authentication systems for email.

Section C. Request for Comments

Parties who wish to submit written comments addressing the Email Authentication Summit must do so by September 30, 2004. Written comments may be filed in either paper or electronic form. Written comments should refer to ''Email Authentication Summit—Comments, (Matter Number P044411)'' to facilitate the organization of comments. A comment filed in paper form should include this reference both in the text and on the envelope, and the original and three copies should be mailed or delivered to the following address: Federal Trade Commission/ Office of the Secretary, Room 159–H (Annex V), 600 Pennsylvania Avenue, NW., Washington, DC 20580. If the comment contains any material for which confidential treatment is requested, it must be filed in paper (rather than electronic) form, and the first page of the document must be clearly labeled ''Confidential.'' The FTC is requesting that any comment filed in paper form be sent by courier or overnight service, if possible, because U.S. postal mail in the Washington area and at the Commission is subject to delay due to heightened security precautions. Comments filed in electronic form (except comments containing any confidential material) should be sent to the following email box: *authenticationsummit@ftc.gov*.

Written comments may address the issues identified below and any other issues in connection with the adoption and implementation of any of the proposed authentication standards.

1. Whether any of the proposed authentication standards (either alone or in conjunction with other existing technologies) would result in a significant decrease in the amount of spam received by consumers.

2. Whether any of the proposed authentication standards would require modification of the current Internet protocols and whether any such modification would be technologically and practically feasible.

3. Whether any of the proposed authentication standards would function with the software and hardware currently used by senders and recipients of email and operators of sending and receiving email servers. If not, what additional software or hardware would the sender and recipient need, how much it would cost, whether it would be required or optional, and where it would be obtained.

[2] SMTP, its abuse by spammers, and the benefits of domain-level authentication are discussed in detail in the Commission's June 2004 National Do Not Email Registry Report to Congress, available at *http://www.ftc.gov/reports/dneregistry/report.pdf*.

4. How operators of receiving email servers are likely to handle un-authenticated messages.

5. Whether any of the proposed authentication standards could result in email being incorrectly labeled as authenticated or unauthenticated (false negatives and false positives), and the steps that could be taken to limit such occurrences.

6. Whether the authentication standards are mutually exclusive or interoperable. Whether any of the proposed authentication standards would integrate with any other standards. For example, if Mail Server A is using standard X, will it accept email easily from Mail Server B that is using standard Y?

7. Whether any of the proposed authentication standards would have to be an open standard (i.e., a standard with specifications that are public).

8. Whether any of the proposed authentication standards are proprietary and/or patented.

9. Whether any of the proposed authentication standards would require the use of goods or services protected by intellectual property laws.

10. How any of the proposed authentication standards would treat email forwarding services.

11. Whether any of the proposed authentication standards would have any implications for mobile users (e.g., users who may be using a laptop computer, an email-enabled mobile phone, or other devices, and who legitimately send email from email addresses that are not administratively connected with their home domain).

12. Whether any of the proposed authentication standards would have any implications for roving users (i.e., users who are obliged to use a third-party submission service when unable to connect to their own submission service).

13. Whether any of the proposed authentication standards would affect the use of mailing lists.

14. Whether any of the proposed authentication standards would have any implications for outsourced email services.

15. Whether any of the proposed authentication standards would have an impact on multiple apparent responsible identities (e.g., in cases where users send email using their Internet Service Provider's SMTP network but have their primary email account elsewhere).

16. Whether any of the proposed authentication standards would have an impact on web-generated email.

17. Whether the proposed authentication standards are scalable. Whether the standards are computationally difficult such that scaling over a certain limit becomes technologically impractical. Whether the standards are monetarily expensive due to hardware and resource issues so that scaling over a certain limit becomes impractical.

18. Identify any costs that would arise as a result of implementing any of the proposed authentication standards, and identify who most likely would bear these costs (e.g., large ISPs, small ISPs, consumers, or email marketers).

19. Whether ISPs that do not participate in an authentication regime would face any challenges providing email services. If so, what types of challenges these ISPs would face and whether these challenges would in any way prevent them from continuing to be able to provide email services.

20. Whether an Internet-wide authentication system could be adopted within a reasonable amount of time. Description of industry and standard-setting efforts, whether there is an implementation schedule in place and, if so, the time frames of the implementation schedule.

21. Whether any of the authentication standards would delay current email transmission times, burden current computer mechanisms, or otherwise adversely affect the ease of email use by consumers.

22. Whether any of the proposed authentication standards would impact the ability of consumers to engage in anonymous political speech.

23. Whether any safeguards are necessary to ensure that the adoption of an industry-wide authentication standard does not run afoul of the antitrust laws.

24. Whether a spammer or hacker could compromise any of the proposed authentication standards by using, for example, zombie drones, spoofing of originating IP addresses, misuse of public/private key cryptography, or other means.

25. Whether any of the proposed authentication systems would prevent ''phishing,'' a form of online identity theft.

26. Whether the operators of small ISPs and business owners would have the technical capacity to use any of the proposed authentication standards. Whether any of the authentication standards could be reasonably implemented by smaller ISPs.

27. Whether any of the proposed authentication standards would have cross-border implications.

28. Whether any of the proposed authentication standards would require an international civil cryptographic standard or other internationally adopted standard and, if so, the implications of this requirement.

29. Description of how the Email Authentication Summit can support industry or standard-setting efforts.

30. Assuming a domain-level authentication system is established in the near term, future measures that the private market should develop and implement in order to combat spam.

Section D. Requests To Participate

Parties who wish to participate in the Email Authentication Summit must notify the FTC and NIST in writing of their interest by September 30, 2004 either by mail to the Secretary of the FTC or by email to *authenticationsummit@ftc.gov.* The Request to Participate must include a statement setting forth the requesting party's expertise in or knowledge of any or all of the issues identified in the Request for Comments section of this Notice and their contact information, including a telephone number, facsimile number, and email address (if available), to enable the FTC to notify them if they are selected. Requests to participate as a panelist should be captioned ''Email Authentication Summit—Request to Participate, (Matter Number P044411), and should be filed in the same manner as prescribed for written comments in the ''Request for Comments'' section. For requests filed in paper form, an original and three copies of each document should be provided. Panelists will be notified on or before October 15, 2004, whether they have been selected.

Using the following criteria, the FTC and NIST staff will select a limited number of participants:

1. The party submitted a complete Request to Participate by September 30, 2004.

2. The party has expertise in or knowledge of some or all of the issues that are the focus of the Summit.

3. The party's participation would promote the representation of a balance of interests at the Summit.

If it is necessary to limit the number of participants, parties who request to participate but are not selected may be afforded an opportunity, if at all possible, to present statements during a limited time period. The time allotted for these statements will be based on the amount of time necessary for discussion of the issues by the selected parties and on the number of persons wishing to make statements.

Section E. Availability of Comments and Requests To Participate as Panelists

The FTC Act and other laws the Commission administers permit the collection of public comments and requests to participate as panelists, to consider and use in this proceeding as appropriate. All timely and responsive public comments and requests to participate, whether filed in paper or electronic form, will be considered by the Commission, and will be available to the public on the FTC website, to the extent practicable, at *http://www.ftc.gov.* As a matter of discretion, the FTC makes every effort to remove home contact information for individuals from the public comments and requests to participate it receives before placing those comments on the FTC website. More information, including routine uses permitted by the Privacy Act, may be found in the FTC's privacy policy, at *http://www.ftc.gov/ftc/privacy.htm.*

By direction of the Commission.

Donald S. Clark,

Secretary.

[FR Doc. 04–20839 Filed 9–14–04; 8:45 am]

BILLING CODE 6750–01–P

DEPARTMENT OF HEALTH AND HUMAN SERVICES

Office of the Assistant Secretary for Planning and Evaluation; Medicare Program; Meeting of the Technical Advisory Panel on Medicare Trustee Reports

AGENCY: Assistant Secretary for Planning and Evaluation, HHS

ACTION: Notice of meeting.

SUMMARY: This notice announces a public meeting of the Technical Advisory Panel on Medicare Trustee Reports (Panel). Notice of this meeting is given under the Federal Advisory Committee Act (5 U.S.C. App. 2, section 10(a)(1) and (a)(2)). The Panel will discuss the long-term rate of change in health spending and may make recommendations to the Medicare Trustees on how the Trustees might more accurately estimate health spending in the long run. The Panel's discussion is expected to be very technical in nature and will focus on the actuarial and economic methods by which Trustees might more accurately measure health spending. Although panelists are not limited in the topics they may discuss, the Panel is not expected to discuss or recommend changes in current or future Medicare provider payment rates or coverage policy.

DATES: September 24, 2004, 8 a.m.–3 p.m. e.d.t.

ADDRESSES: The meeting will be held at HHS headquarters at 200 Independence Ave., SW., 20201, Room 425A.

Comments: The meeting will allocate time on the agenda to hear public comments. In lieu of oral comments, formal written comments may be submitted for the record to Andrew Cosgrove, OASPE, 200 Independence Ave., SW., 20201, Room 443F.8. Those submitting written comments should identify themselves and any relevant organizational affiliations.

FOR FURTHER INFORMATION CONTACT: Andrew Cosgrove (202) 205–8681, *andrew.cosgrove@hhs.gov*. Note: Although the meeting is open to the public, procedures governing security procedures and the entrance to Federal buildings may change without notice. Those wishing to attend the meeting should call or e-mail Mr. Cosgrove by September 17, 2004, so that their name may be put on a list of expected attendees and forwarded to the security officers at HHS Headquarters.

SUPPLEMENTARY INFORMATION: On April 22, 2004, we published a notice announcing the establishment and requesting nominations for individuals to serve on the Panel. The panel members are: Mark Pauly, Edwin Hustead, Alice Rosenblatt, Michael Chernew, David Meltzer, John Bertko, and William Scanlon.

Topics of the Meeting: The Panel is specifically charged with discussing and possibly making recommendations to the Medicare Trustees on how the Trustees might more accurately estimate the long term rate of health spending in the United States. The discussion is expected to focus on highly technical aspects of estimation involving economics and actuarial science. Panelists are not restricted, however, in the topics that they choose to discuss.

Procedure and Agenda: This meeting is open to the public. Interested persons may observe the deliberations and discussions, but the Panel will not hear public comments during this time. The Commission will also allow an open public session for any attendee to address issues specific to the topic.

Authority: 42 U.S.C. 217a; section 222 of the Public Health Services Act, as amended. The panel is governed by provisions of Public Law 92–463, as amended (5 U.S.C. Appendix 2), which sets forth standards for the formation and use of advisory committees.

Dated: September 8, 2004.

Michael J. O'Grady,

Assistant Secretary for Planning and Evaluation.

[FR Doc. 04–20736 Filed 9–14–04; 8:45 am]

BILLING CODE 4150–05–P

DEPARTMENT OF HEALTH AND HUMAN SERVICES

Administration for Children and Families

Submission for OMB review; Comment Request

Title: Survey of Early Head Start Programs.

OMB No.: New collection.

Description: The Head Start Reauthorization Act of 1994 established a special initiative creating funding for services for families with infants and toddlers. In response, the Administration on Children, Youth and Families (ACYF) within the Administration for Children and Families (ACF) developed the Early Head Start program. Early Head Start programs are designed to produce outcomes in four domains: (1) Child development, (2) family development, (3) staff development, and (4) community development. As a requirement of the Reauthorization Act, ACYF funded a rigorous randomized trial to study the effectiveness of Early Head Start programs, sampling from 17 programs funded in the initial years. That research found positive effects of the program overall in a variety of areas, as well as effects for different program types and levels of implementation, and among study participants with different characteristics.

The aim of the current research is to obtain a national picture of Early Head Start. This initiative will begin a process of describing how the Early Head Start initiative has grown over time, how programs are currently implementing services, and who is being served. The study will be conducted between September 2004 and May 2005.

The data will consist of a survey of all Early Head Start programs in October 2004 and site visits to a selected sample of 25 programs in early 2005. All data collection instruments have been designed to minimize the burden on respondents by minimizing the time required to respond. Participation in the study is voluntary.

The results of the research will be used by the Head Start Bureau and ACF to gain a better understanding of changes in program processes and services over time, to identify areas of

strength and weakness in order to target training and technical assistance or further research efforts, and finally, to provide a broader context for lessons learned from the impact study.

Respondents: Early Head Start directors, Early Head Start coordinators and specialists, teachers, home visitors, and parents of Early Head Start children.

ANNUAL BURDEN ESTIMATES

Instrument	Number of respondents	Number of responses per respondent	Average burden hours per response	Total burden hours
Survey of Programs (2004)	[a] 595	1	3.0	1,785.0
Site Visit Protocol (2005)				
Director Protocol	25	1	3.0	75.0
Coordinator/Specialist Protocol: [b]				
Community Partnership	25	1	1.0	25.0
Disabilities	25	1	1.0	25.0
Early Childhood	25	1	1.0	25.0
Family Partnership	25	1	1.0	25.0
Home Visiting	25	1	1.0	25.0
Teacher Protocol [c]	125	1	1.5	187.5
Home Visitor Protocol [c]	125	1	1.5	187.5
Parent Protocol [c]	125	1	1.5	187.5
Total for Site Visits	25			762.5
Estimated Total Annual Burden 2004				1785.5
Estimated Total Annual Burden 2005				762.5

[a] Assumes an 85 percent response rate for the survey.
[b] Not all programs will ahve staff in each position, therefore, burden estimates for some programs may be overstated.
[c] Assumes groups interviews with up to five individuals per site. Assumes that all sites have both home visitors and teachers, although when that is not the case, the burden estimates will be overstated.

Additional Information

Copies of the proposed collections may be obtained by writing to the Administration for Children and Families, Office of Administration, Office of Information Services, 370 L'Enfant promenade, SW., Washington, DC 20447, Attn: ACF Reports Clearance Officer. All requests should be identified by the title of the information collection. E-mail address: *grjohnson@acf.hhs.gov.*

OMB Comment

OMB is required to make a decision concerning the collection of information between 30 and 60 days after publication of this document in the **Federal Register.** Therefore, a comment is best assured of having its full effect if OMB receives it within 30 days of publication. Written comments and recommendation for the proposed information collection should be sent directly to the following: Office of Management and Budget, Paperwork Reduction Project, Attn: Desk Officer for ACF, E-mail address: *Katherine_T._Astrich@omb.eop.gov.*

Dated: September 7, 2004.

Robert Sargis,

Reports Clearance Officer.

[FR Doc. 04–20782 Filed 9–14–04; 8:45 am]

BILLING CODE 4184–01–M

DEPARTMENT OF HEALTH AND HUMAN SERVICES

Food and Drug Administration

[Docket No. 2004N–0404]

Novel Formulations of Dialysis Solutions; Public Meeting

AGENCY: Food and Drug Administration, HHS.

ACTION: Notice of public meeting.

SUMMARY: The Food and Drug Administration (FDA) is announcing a public meeting to gain input from interested persons on how solutions used in hemodialysis or peritoneal dialysis should be evaluated for safety and efficacy. More specifically, the agency is interested in collecting comments on the development of formulations containing novel concentrations of electrolytes and simple sugars, but no new molecular entities.

DATES: The public meeting will be held on September 27, 2004, from 9 a.m. to 4 p.m. Written or electronic comments on dialysis solutions are welcome at any time.

ADDRESSES: The public meeting will be held at the Doubletree Hotel, 1750 Rockville Pike, Rockville, MD. Public parking is available at the hotel. The Doubletree Hotel is also accessible by Metro at the Twinbrook Station on the Red Line.

Submit written comments to the Division of Dockets Management (HFA–305), Food and Drug Administration, 5630 Fishers Lane, rm. 1061, Rockville, MD 20852. Submit electronic comments to *http://www.fda.gov/dockets/ecomments.*

FOR FURTHER INFORMATION CONTACT: Norman Stockbridge, Center for Drug Evaluation and Research (HFD–110), Food and Drug Administration, 5600 Fishers Lane, Rockville, MD 20857, 301–594–5365, e-mail: *Norman.Stockbridge@fda.hhs.gov.*

SUPPLEMENTARY INFORMATION:

I. Background

FDA is holding a public meeting to discuss the nature of development programs for solutions used in hemodialysis or peritoneal dialysis. The discussion will be limited to solutions containing only simple sugars and the electrolytes and other small molecules normally found in plasma. Solutions containing novel oncotic or osmotic agents more clearly resemble conventional drugs and are subject to conventional drug development programs, with the usual characterization of safety and effectiveness through clinical studies. The discussion will focus on the following questions:

• For solutions with no novel constituents, what clinical studies are necessary?

• Are there acceptable ranges of individual sugars and electrolytes that can be established in clinical studies so that a novel product would not need to demonstrate its ability to act as a dialysate?

• Are there additional constraints for combinations of ingredients, for example, to constrain the overall osmolarity?

• In the absence of clinical studies to show safety and effectiveness, how would appropriate instructions for use be established?

If you need special accomodations due to a disability, please contact Norman Stockbridge at least 7 days in advance.

II. Comments and Transcripts

Interested persons may submit to the Division of Dockets Management (see **ADDRESSES**) written or electronic comments on dialysates. Two paper copies of any mailed comments are to be submitted, except that individuals may submit one paper copy. Comments are to be identified with the docket number found in brackets in the heading of this document. Comments are available for public examination in the Division of Dockets Management between 9 a.m. and 4 p.m., Monday through Friday.

There will be no transcript of this meeting.

Dated: September 9, 2004.

Jeffrey Shuren,

Assistant Commissioner for Policy.

[FR Doc. 04–20809 Filed 9–10–04; 3:49 pm]

BILLING CODE 4160–01–S

DEPARTMENT OF HEALTH AND HUMAN SERVICES

Health Resources and Services Administration

Agency Information Collection Activities Under Emergency Review for the Office of Management and Budget (OMB)

The Health Resources and Services Administration (HRSA) has submitted the following request (see below) for emergency OMB review under the Paperwork Reduction Act (44 U.S.C. Chapter 35). OMB approval has been requested within 5 days of publication of this notice. A copy of the information collection plans may be obtained by accessing *http://www.bphc.hrsa.gov/freeclinicsftca* or contacting Shannon Faltens or Felicia Collins via e-mail at *FreeClinicsFTCA@hrsa.gov* or on (301) 594–0818.

Proposed Project: Free Clinics Federal Tort Claims Act (FTCA) Deeming Application: New

Congress legislated FTCA medical malpractice protection for free clinic volunteer health professionals through section 194 of the Health Insurance Portability and Accountability Act (HIPAA). Individuals eligible to participate in this program are health care practitioners volunteering at free clinics who meet specific eligibility requirements. If an individual meets all the requirements of this program, he/she can be ''deemed'' to be a Federal employee. This deemed status specifically provides immunity from medical malpractice lawsuits as a result of the performance of medical, surgical, dental, or related activities within the scope of the volunteer's work at the free clinic.

The sponsoring free clinic must submit a FTCA deeming application to HRSA on behalf of its volunteer health care professional(s). This application will require information about the sponsoring free clinic's credentialing and privileging systems, risk management practices, and quality assurance processes in order to ensure that the Federal Government is not exposed to undue liability resulting from the medical malpractice coverage of non-qualified health care professionals. Attached to the application will be a listing of specific volunteer health care professionals for whom the sponsoring free clinic is requesting deemed status.

Emergency approval is being requested because the data collection and reporting of this information is needed before the expiration of the normal time limits under OMB's regulations at 5 CFR part 1320. This information is needed to ensure the timely availability of data as necessary for the Secretary to make a determination for the provision of FTCA deemed status to volunteer health care professionals working at free clinics. Upon receipt of OMB approval for this submission, HRSA will publish a **Federal Register** notice to begin the process for routine clearance under 5 CFR 1320.

The burden estimate for this project is as follows:

Form	Number of respondents	Responses per respondent	Total responses	Hours per response	Total burden hours
FTCA Deeming Application	600	1	600	2.5	1,500

Written comments and recommendations should be sent within 5 days of publication of this notice to John Kramer, Human Resources and Housing Branch, Office of Management and Budget, New Executive Office Building, Room 10235, Washington, DC 20503. Due to potential delays in OMB's receipt and processing of mail sent through the U.S. Postal Service, respondents are encouraged to submit comments by fax to 202–395–6974.

Dated: September 10, 2004.

Tina M. Cheatham,

Director, Division of Policy Review and Coordination.

[FR Doc. 04–20767 Filed 9–14–04; 8:45 am]

BILLING CODE 4165–15–P

DEPARTMENT OF HEALTH AND HUMAN SERVICES

Health Resources And Services Administration

Agency Information Collection Activities: Proposed Project: Free Clinic FTCA Program Deeming Application; Withdrawal

AGENCY: Health Resources and Services Administration, HHS.

ACTION: Notice of withdrawal.

SUMMARY: The Health Resources and Services Administration (HRSA) is announcing the withdrawal of the 60 day FR notice published on August 27, 2004, FR Doc. 04–19681, for public comment on the proposed data collection project related to the Free Clinic Federal Tort Claims Act (FTCA) Program deeming application. The notice is being withdrawn because the agency is requesting an emergency review and approval from OMB for the deeming application under the Paperwork Reduction Act of 1995 (44 U.S.C. Chapter 35).

DATES: The 60 day information collection notice is withdrawn effective September 15, 2004.

FOR FURTHER INFORMATION CONTACT: Susan G. Queen, Ph.D., HRSA Reports Clearance Office, HRSA/OPE Room 14–

43, 5600 Fishers Lane, Rockville, MD 20857, 301–443–1129.

SUPPLEMENTARY INFORMATION: Emergency approval is being requested for the Free Clinic FTCA Program deeming application because the data collection and reporting of this information is needed before the expiration of the normal time limits under OMB's regulations at 5 CFR part 1320. This information is needed to ensure the timely availability of data as necessary for the Secretary to make a determination for the provision of FTCA deemed status to volunteer health care professionals working at free clinics. Upon OMB's review and approval of the proposed data collection project, HRSA will publish a new 60 day **Federal Register** notice to begin the process for routine clearance under 5 CFR part 1320.

Dated: September 10, 2004.

Tina M. Cheatham,

Director, Division of Policy Review and Coordination.

[FR Doc. 04–20769 Filed 9–14–04; 8:45 am]

BILLING CODE 4165–15–P

DEPARTMENT OF HEALTH AND HUMAN SERVICES

Health Resources And Services Administration

Application Guidance for Free Clinics to Sponsor a Volunteer Health Professional for Federal Tort Claims Act (FTCA) Deemed Status and FTCA Coverage for Medical Malpractice Claims; Withdrawal

AGENCY: Health Resources and Services Administration, HHS.

ACTION: Notice of withdrawal.

SUMMARY: The Health Resources and Services Administration (HRSA) is announcing the withdrawal of the 30 day FR notice published on September 3, 2004, FR Doc. 04–20180, for the solicitation of comments on the Application Guidance for Free Clinics to Sponsor a Volunteer Health Professional for Federal Tort Claims Act (FTCA) Deemed Status and FTCA Coverage for Medical Malpractice Claims. The notice is being withdrawn because the agency is requesting an emergency review and approval from OMB for the deeming application under the Paperwork Reduction Act of 1995 (44 U.S.C. Chapter 35).

DATES: The solicitation of comments notice is withdrawn effective September 15, 2004.

FOR FURTHER INFORMATION CONTACT: Please contact Shannon Faltens or Felicia Collins at HRSA, Bureau of Primary Health Care, Division of Clinical Quality, 4350 East West Highway, Bethesda, MD 20814, via e-mail at *FreeClinicsFTCA@hrsa.gov*, or on (301) 594–0818.

SUPPLEMENTARY INFORMATION: Emergency approval is being requested for the Free Clinic FTCA Program deeming application because the data collection and reporting of this information is needed before the expiration of the normal time limits under OMB's regulations at 5 CFR part 1320. This information is needed to ensure the timely availability of data as necessary for the Secretary to make a determination for the provision of FTCA deemed status to volunteer health care professionals working at free clinics. Upon OMB's review and approval of the proposed data collection project, HRSA will publish a new 60 day **Federal Register** notice to begin the process for routine clearance under 5 CFR part 1320.

Dated: September 10, 2004.

Tina M. Cheatham,

Director, Division of Policy Review and Coordination.

[FR Doc. 04–20768 Filed 9–14–04; 8:45 am]

BILLING CODE 4165–15–P

DEPARTMENT OF HEALTH AND HUMAN SERVICES

Office of Inspector General

Program Exclusions: August 2004

AGENCY: Office of Inspector General, HHS.

ACTION: Notice of program exclusions.

During the month of August 2004, the HHS Office of Inspector General imposed exclusions in the cases set forth below. When an exclusions is imposed, no program payment is made to anyone for any items or services (other than an emergency item or service not provided in a hospital emergency room) furnished, ordered or prescribed by an excluded party under the Medicare, Medicaid, and all Federal Health Care programs. In addition, no program payment is made to any business or facility, *e.g.*, a hospital that submits bills for payment for items or services provided by an excluded party. Program beneficiaries remain free to decide for themselves whether they will continue to use the services of an excluded party even though no program payments will be made for items and services provided by that excluded party. The exclusions have national effect and also apply to all Executive Branch procurement and non-procurement programs and activities.

Subject city, state	Effective date
PROGRAM-RELATED CONVICTIONS	
AMR, HUSSEIN TERRE HAUTE, IN	9/20/2004
BRYCE, MELISSA STIGLER, OK	9/20/2004
CHE, CHANTHY FONTANA, CA	5/11/2004
COLLINS, DEBRA MINFORD, OH	9/20/2004
CONGROVE, PAMELA POWELL, OH	9/20/2004
CURTIS, ANTOINETTE MILWAUKEE, WI	9/20/2004
DEMPSEY, TRACY NEWARK, DE	6/2/2004
DENNIS, CRYSTAL SEATTLE, WA	9/20/2004
DIAB, CHRISTINA SPRINGFIELD, VA	9/20/2004
DINOZZI, DAVID YOUNGWOOD, PA	9/20/2004
DO, ALEXANDER NAPANOCH, NY	9/20/2004
DRUMMOND, ANNETTE RUSHVILLE, NE	9/20/2004
EZEBUNWA, ESTHER SACRAMENTO, CA	9/20/2004
GIRGIS, DIMITRI ANNADALE, VA	9/20/2004
GOLDEN, ILYA LEWISBURG, PA	9/20/2004
GREENUP, VANESSA RESERVE, LA	9/20/2004
HAYES, JANELLE LAWTON, OK	9/20/2004
HEATH, KENDALL PICO RIVERA, CA	9/20/2004
HUPP, BRIAN POMEROY, OH	9/20/2004
HUPP, KIMBERLY POMEROY, OH	9/20/2004
LOPEZ, KARINE SAFFORD, AZ	9/20/2004
MADDOCK, MICHAEL HARBOR CITY, CA	5/11/2004
MANN, GILDA OLYMPIA, WA	9/20/2004
MAYHAN, KIMBERLY COLUMBUS, OH	9/20/2004
PLANTS, KAREN OKLAHOMA CITY, OK	9/20/2004
QD'S PHARMACY, INC WOODHAVEN, NY	9/20/2004
REVELLI, CARMEN LAKEWOOD, CA	9/20/2004
SALEH, EHAB SPRINGFIELD, VA	9/20/2004
SALEH, WASSIM SPRINGFIELD, VA	9/20/2004
SHTRAKHMAN, VLADIMIR LORETTO, PA	9/20/2004
STANDIGE, JUDY MULDROW, OK	9/20/2004
VILLA, NATHAN LOVELAND, CO	9/20/2004
YASIN, MUHAMMAD SUSANVILLE, CA	9/20/2004
ZELLER, JOHN	9/20/2004

Subject city, state	Effective date
OCEANSIDE, CA	
FELONY CONVICTION FOR HEALTH CARE FRAUD	
BAER, MICHAEL LEESBURG, NJ	9/20/2004
BAXTER-WINDLER, PATTY AUSTINBURG, OH	9/20/2004
BRASH, TRENT MONACA, PA	9/20/2004
CLOUGH, LYNNE ALBION, NY	9/20/2004
COOPER, ILONA CHICKASHA, OK	9/20/2004
COOPER, MARIE DRUMRIGHT, OK	9/20/2004
DAWSON, BURL DRUMRIGHT, OK	9/20/2004
DAWSON, KARLA DRUMRIGHT, OK	9/20/2004
GARABRANDT, VICTORIA DENNISON, OH	9/20/2004
GUIOU, MARCI RICHMOND, ME	9/20/2004
HAUSMANN, CHARLES MILWAUKEE, WI	9/20/2004
HILEMAN, ROBERT MOHNTON, PA	9/20/2004
LANGSTON, RHONDA PORTLAND, IN	9/20/2004
MADDEN, PAMELA BURLINGTON, KY	9/20/2004
MITCHELL, JOEL NEWCASTLE, OK	9/20/2004
NEWPORT, PAM SAPULPA, OK	9/20/2004
PAPPION, DEBORAH OCALA, FL	9/20/2004
REINBOLT, DANIEL TOLEDO, OH	9/20/2004
ROBERTS, VALERIE RAVENEL, SC	9/20/2004
SIMMS, BRANDI CINCINNATI, OH	9/20/2004
SMITH, KATHY SACO, ME	9/20/2004
SMITH, STEUART DENVER, CO	9/20/2004
STINEBUCK, JANET DRUMRIGHT, OK	9/20/2004
STREETER, SUSAN SPENCER, MA	9/20/2004
TARWATER, DOYLE MCMURRAY, PA	9/20/2004
TSCHINKEL, ROBERT HUDSON, OH	9/20/2004
WAGNER, JEAN SHERRODSVILLE, OH	9/20/2004
WASHBURN, JUDITH LIBERTY HILL, TX	9/20/2004
YOUATT, NED ROMEO, MI	9/20/2004
FELONY CONTROL SUBSTANCE CONVICTION	
ARCHIBALD, BARBARA PALMER, AK	9/20/2004
ARREDONDO, NORMA CORPUS CHRISTI, TX	9/20/2004
BROCK, SANDRA COLUMBUS, OH	9/20/2004
CAMMACK, JAMES KERRVILLE, TX	9/20/2004
COLLINS, MATTHEW VAN NUYS, CA	9/20/2004
COTTER, LYNNE CHESAPEAKE, VA	9/20/2004
CRAIN, ADRAIN CARUTHERSVILLE, MO	9/20/2004
CUMRO, REBECCA FRISCO, TX	9/20/2004
DAVIS, DARRELL STOCKTON, TX	9/20/2004
DEANDREA, KRISTEN ENGLEWOOD, CO	9/20/2004
EAGAN, SHARON LOUISVILLE, OH	9/20/2004
FRASER, JOHN RAIFORD, FL	9/20/2004
GARDNER, RONDA BLOOMINGTON, IN	9/20/2004
JENKINS, CHRISTINA WHEAT RIDGE, CO	9/20/2004
KING, JOEL AUSTIN, TX	9/20/2004
KRUEGER, AMY FORT WAYNE, IN	9/20/2004
KUSZMAR, THADDEUS RISING SUN, MD	9/20/2004
LEE, GAILOR DUNCAN, OK	9/20/2004
LEE, KIMBERLY HALTOM CITY, TX	9/20/2004
LEMAR, TENE HOUSTON, TX	9/20/2004
MALAVE, ERNESTO GEORGETOWN, TX	9/20/2004
MONTGOMERY, TANYA VANDALIA, OH	9/20/2004
NESTLEHUT, RAQUEL CONWAY, AR	9/20/2004
NIX, JACKIE EVANSVILLE, IN	9/20/2004
PARSA, BRUCE LEAVENWORTH, KS	9/20/2004
PULIVARTHI, VENKATA DALLAS, TX	9/20/2004
ROBERTS, AARON MANCHESTER, MO	9/20/2004
ROPER, BONNIE CLEARFIELD, UT	9/20/2004
SANZENBACHER, ERIC SALT LAKE CITY, UT	9/20/2004
SAWYER, SUZETTE SARATAGO SPRINGS, UT	9/20/2004
SINGH, RAJINDER EAST LIVERPOOL, OH	9/20/2004
STRINGHAM, GREGORY DALLAS, TX	9/20/2004
STUBBINS, DONNA WAUSEON, OH	9/20/2004
TRUSNOVIC, WILLIAM STEUBENVILLE, OH	9/20/2004
PATIENT ABUSE/NEGLECT CONVICTIONS	
BROWN, TRISTAN HOUSTON, TX	9/20/2004
CASTRO, RICARDO MIAMI BEACH, FL	9/20/2004
DIAZ, AURELIANO LAKEWOOD, CO	9/20/2004
DOMINGO, CLEOFE WAIPAHU, HI	9/20/2004
DOMINGO, MANNY WAIPAHU, HI	9/20/2004
EVANS, LINDA RUSTON, LA	9/20/2004
FLETCHER, MAURICE EPPS, LA	9/20/2004
GUNTHER, BRIAN BRYN ATHYN, PA	9/20/2004
HAMILTON, NICTORIA GLENMORA, LA	9/20/2004
HARRY, CATHERINE AMITYVILLE, NY	9/20/2004
HEAD, SUE ORRTANNA, PA	9/20/2004
JILES, DESMOND BATESBURG-LEESVILLE, SC	9/20/2004
KLEIN, SAMUEL GREENWICH, CT	9/20/2004
LANGE, AMANDA ST CLOUD, MN	9/20/2004
MATT, JANET RUTLAND, VT	9/20/2004
MAZER, JOEL CLAWSON, MI	9/20/2004
PIERCE, PAUL GARLAND, TX	9/20/2004
PITTS, ODIS OKLAHOMA CITY, OK	9/20/2004
POLICINO, PATRICIA LANGHORN, PA	9/20/2004
PUODZIUNIENE, FILIMENA LAKEWOOD, CO	9/20/2004
RAMIREZ, CHARLIE LOS ANGELES, CA	9/20/2004
SPICER, ALBERT POUGHKEEPSIE, NY	9/20/2004
SWEATMAN, AARON NATCHEZ, MS	9/20/2004
TAYLOR, LAFENUS BALTIMORE, MD	9/20/2004
WEIS, KELLIE LOYALTON, CA	9/20/2004
ZYLSTRA, JAMES ST CLOUD, MN	9/20/2004
CONVICTION FOR HEALTH CARE FRAUD	
ELCHISCO, GEORGE TOLEDO, OH	9/20/2004
MCCALL, EILEEN MERRIMACK, NH	9/20/2004
CONVICTION-OBSTRUCTION OF AN INVESTIGATION	
BISIG, PHILIP LOUISVILLE, KY	9/20/2004
LICENSE REVOCATION/SUSPENSION/SURRENDERED	
ADAMS, VALERIE PONCA CITY, OK	9/20/2004
ADERMAN, BONNIE PANA, IL	9/20/2004
ALBRECHT, KATHLEEN COUNCIL BLUFFS, IA	9/20/2004
BARR, EVELYN ANDERSON, IN	9/20/2004
BATTAGLIA, LINDA CAMBRIDGE, MA	9/20/2004
BENTON, JEFFERY TURLOCK, CA	9/20/2004
BERG, DALRIE	9/20/2004

Subject city, state	Effective date
WESTMINSTER, CO	
BERMUDEZ, ANGELA FONTANA, CA	9/20/2004
BERRY, DAVID BATON ROUGE, LA	9/20/2004
BERRY, MELANIE KENT, WA	9/20/2004
BIGBY, PEGGY NORMAN, OK	9/20/2004
BOONE, CHRISTI PORT LAVACA, TX	9/20/2004
BOOTH, MICHELLE KENT, WA	9/20/2004
BOWLER, BRIAN BRIGHAM CITY, UT	9/20/2004
BRADY, VERONICA SPANAWAY, WA	9/20/2004
BUDWICK, CARLENA SARATOGA SPRINGS, NY	9/20/2004
CAIN, KARLA MIDWEST CITY, OK	9/20/2004
CALLAWAY, MAUREEN HOUSTON, TX	9/20/2004
CARTY, REBECCA INDIANAPOLIS, IN	9/20/2004
CLIFTON, LORETTA PHOENIX, AZ	9/20/2004
DAIL, JOSHUA COLORADO SPRINGS, CO	9/20/2004
DARBY, KENNETH SHAKER HEIGHTS, OH	9/20/2004
DEVENISH, JAMIE SPRINGVILLE, UT	9/20/2004
DONSBACH, HOLLY SHIREMANSTOWN, PA	9/20/2004
DRESSER, JAMES EL CAJON, CA	9/20/2004
EDWARDS, LEAH NEW SMYRNA BEACH, FL	9/20/2004
EGE, MICHAEL DE KALB, IL	9/20/2004
ESTRADA, MOISES BOYES HOT SPRINGS, CA	9/20/2004
ESTRADA, TANIA LOS ANGELES, CA	9/20/2004
FLORES, MARIE PISCATAWAY, NJ	9/20/2004
FORRESTER, MELISSA OROVILLE, CA	9/20/2004
GILCHRIST, MARY PEABODY, MA	9/20/2004
HELLMANN, JAMES SEATTLE, WA	9/20/2004
HENDERSON, DEMETA HENDERSON, NV	9/20/2004
HOLLAND, VICKEY TUSKAHOMA, OK	9/20/2004
JOHNSON, EMILIE AUBURN, WA	9/20/2004
JOLLY, SANDRA EDWARDSVILLE, IL	9/20/2004
JONES, SHEILA SHREVEPORT, LA	9/20/2004
JULIUS, CHARLEEN RUTLAND, VT	9/20/2004
LABONTE, MARY SCOTTSDALE, AZ	9/15/2004
LEEDS, JENNIFER LEOMINSTER, MA	9/20/2004
LEHRMAN, MONA TULSA, OK	9/20/2004
LINE, JASON ST ALBANS, VT	9/20/2004
LINSON, JEANETTE KINGMAN, AZ	9/20/2004
LINTAG, RODOLFO EDISON, NJ	9/20/2004
LOWE, AVERILL JACKSONVILLE, FL	9/20/2004
MANGIONE, MICHELE WALDWICK, NJ	9/20/2004
MCCABE, VALERIE KEARNY, NJ	9/20/2004
MEECE, KENNY HOT SPRINGS, AR	9/20/2004
MENARD, NOREEN N BROOKFIELD, MA	9/20/2004
MENDEZ, BRANDIE HAUGHTON, LA	9/20/2004
MENNE, CYNTHIA MAPLE HEIGHTS, OH	9/20/2004
MILLER, THOMAS FORT MYERS, FL	9/20/2004
MOSELEY, IDA HENDERSON, NV	9/20/2004
MOWER, KENNETH LAS VEGAS, NV	9/20/2004
NEPSA, REBECCA MONROE, NC	9/20/2004
NEWTON, GLENN CLAREMORE, OK	9/20/2004
OUSLEY, SHARON FLORENCE, KY	9/20/2004
PATEL, VITTHAL AVENEL, NJ	9/20/2004
PIERCE, WILLIAM BERLIN, MD	9/20/2004
POWELL, SONYA AMARILLO, TX	9/20/2004
ROBINSON, SHANNON FORT SMITH, AR	9/20/2004
ROGERS, MISTY COTTONWOOD, AZ	9/20/2004
ROYSTER, WILLIE MAY, TX	9/20/2004
ROZARIO, TERENCE RENO, NV	9/20/2004
RUDOLPH, LAWRENCE EL PASO, TX	9/20/2004
SANCHEZ, ARMANDO HOUSTON, TX	9/20/2004
SHAVER, STEVEN LAS VEGAS, NV	9/20/2004
SHORTER, LATRICE SAN BERNARDINO, CA	9/20/2004
SOOY, CHRISTOPHER WOODLAND FALLS, CA	9/20/2004
STODDARD, LARRY LAYTON, UT	9/20/2004
STRONG, LUTRICE MILWAUKEE, WI	9/20/2004
SURDY, JAMES AUSTIN, MN	9/20/2004
TALBOT, THOMAS FRESNO, CA	9/20/2004
TAYLOR, DRENDA LAS VEGAS, NV	9/20/2004
THOMSON, BARBARA PEORIA, AZ	9/20/2004
TOURAY, BRIAN DENVER, CO	9/20/2004
TURNER, DONNA NORWALK, CA	9/20/2004
TUSOW, TERRY SUPERIOR, WI	9/20/2004
UCKAN, EDA CLERMONT, FL	9/20/2004
VIENS-BAINS, AMARJIT INDIANAPOLIS, IN	9/20/2004
VONHOFFEN, LAURA TREVOR, WI	9/20/2004
WALLACE, GRETCHEN GATESVILLE, TX	9/20/2004
WALTERS, BLOSSOM NAPLES, FL	9/20/2004
WARD, BRANDY SMITHFIELD, NC	9/20/2004
WATSON, DONNA RUTLAND, VT	9/20/2004
WILDER, MARGARET WINSTON-SALEM, NC	9/20/2004
FEDERAL/STATE EXCLUSION/ SUSPENSION	
CLAYTON CARE CORPORATION DES MOINES, IA	9/20/2004
RAMSDEN, SUZANNE POUGHKEEPSIE, NY	9/20/2004
FRAUD/KICKBACKS/PROHIBITED ACTS/ SETTLEMENT AGREEMENTS	
BAKER, TERESA AIDERSON, WV	9/8/2003
BRISTOL, ROBERT GLEN MILLS, PA	5/6/2004
COUSER, WILLIAM WOODINVILLE, WA	8/3/2004
REGENCY HEALTH SERVICES, INC FORESTVILLE, MD	5/6/2004
ROBBINS, CLAUDE BEAVE, WV	9/8/2003
OWNED/CONTROLLED BY CONVICTED ENTITIES	
FAMILY HEALTH CENTER, P C CEDAR RAPIDS, IA	9/20/2004
PATRICK J VALICENTI, D D S, P C NEWBURGH, NY	9/20/2004
RICARDO CASTRO, MD, PA MIAMI BEACH, FL	9/20/2004
DEFAULT ON HEAL LOAN	
BARNES, DE ELWARD LOS ANGELES, CA	9/20/2004
BESSONETT, PAULA TYLER, TX	9/20/2004
CALOF, JAN GRANADA HILLS, CA	9/20/2004
CARLSON, JOANNE ALAMEDA, CA	9/20/2004
DAWS, MICHAEL ENGLEWOOD, CO	7/29/2004
MORA, MATTHEW PLEASANTON, CA	9/20/2004
STEPHENS, RYAN ONTARIO, OR	9/20/2004
TAYMOORI, ZAHRA ENCINO, CA	9/20/2004
OWNERS OF EXCLUDED ENTITIES	
POTOCSKY, I WEST BLOOMFIELD, MI	9/20/2004

Dated: August 31, 2004.

Katherine B. Petrowski,

Director, Exclusions Staff, Office of Inspector General.

[FR Doc. 04–20710 Filed 9–14–04; 8:45 am]

BILLING CODE 4150–04–P

DEPARTMENT OF HOMELAND SECURITY

Federal Emergency Management Agency

Pilot Program for the Mitigation of Severe Repetitive Loss Properties

AGENCY: Mitigation Division, Federal Emergency Management Agency (FEMA), Emergency Preparedness and Response Directorate, Department of Homeland Security.

ACTION: Notice of meeting and request for comments.

SUMMARY: Section 1361A of the National Flood Insurance Act of 1968 (the Act), as amended by section 102 of the Bunning-Bereuter-Blumenauer Flood Insurance Reform Act of 2004 (Pub. L. 108–264), 42 U.S.C. 4102a., authorizes a new Pilot Program for the Mitigation of Severe Repetitive Loss Properties. Section 1361A(j) of the Act requires FEMA to consult with State and local officials and to provide an opportunity for oral presentation, on the record, of the data and arguments from such officials on developing procedures for the distribution of funds to carry out eligible mitigation activities under the Pilot Program. Accordingly, with this notice FEMA is initiating consultation with State and local officials, as well as members of the public, on procedures for the new Pilot Program. Interested parties may submit written comments in response to this notice during the consultation period. During this period, FEMA will hold a meeting in mid-November, 2004 with representative officials of State and local governments, organizations representing the emergency management, floodplain management, and insurance professions, and other interested parties, for input on overall program requirements and procedures for the new grant funds, including issues raised in this notice.

DATES: Written comments may be received no later than November 30, 2004.

ADDRESSES: Please send written comments, including responses to the questions raised in this notice, to the Rules Docket Clerk, Office of the General Counsel, Federal Emergency Management Agency, 500 C Street, SW., room 840, Washington DC 20472, (facsimile) (202) 646–4536, or (e-mail) *FEMA-RULES@dhs.gov.*

FOR FURTHER INFORMATION CONTACT: Cecelia Rosenberg, Federal Emergency Management Agency, Mitigation Division, Risk Reduction Branch, 500 C Street, SW., room 417, Washington, DC 20472, (202) 646–3321 or e-mail *Cecelia.Rosenberg@dhs.gov.*

SUPPLEMENTARY INFORMATION: The purpose of this Notice is to announce that FEMA is soliciting input from State and local officials, as well as from the emergency management, floodplain management, and insurance industry communities, and other interested parties on considerations for the development of grant program requirements and procedures for the newly authorized Pilot Program for the Mitigation of Severe Repetitive Loss Properties. FEMA will hold a meeting in mid-November, 2004 with representative State and local officials for oral comment on the issues raised in this notice, and also invites all interested parties to provide written comments by November 30, 2004.

Program Description. Section 1361A of the Act authorizes FEMA to implement a Pilot Program that would provide financial assistance to States and communities for the Mitigation of Severe Repetitive Loss Properties with funding of up to $40 million each year that will remain available until expended. The Pilot Program represents a concentrated effort to mitigate those insured properties that have suffered the greatest amount of damage in terms of claims against the National Flood Insurance Fund. Severe repetitive loss properties are defined in section 1361A(b)(1) of the Act as Single Family Properties consisting of one to four family residences that are covered under a contract for flood insurance made available under the Act which have had four or more claims with each claim exceeding $5,000 and with the cumulative payments exceeding $20,000, or which have had at least two claim payments that cumulatively exceed the value of the property. Section 1361A(l) of the Act requires that the Pilot Program terminate on September 30, 2009.

In summary, the Act contains the following provisions for the Pilot Program:

- Section 1361A(b)(2) of the Act requires FEMA to provide the definition of a severe repetitive loss property as it pertains to property consisting of five or more residences;
- Section 1361A(c) of the Act identifies the mitigation activities eligible for funding;
- Section 1361A(d) of the Act provides FEMA with the authority to establish cost-share incentives for States participating in the program;
- Section 1361A(e) of the Act requires FEMA to identify severe repetitive loss properties and notify States, communities, and owners of such properties of the availability of mitigation assistance as well as the consequences of declining such mitigation offers;
- Sections 1361A(f) and section 1361A(g) of the Act establish standards and limitations by which FEMA can make mitigation offers;
- Section 1361A(h)(1) through (5) of the Act provides for insurance rate increases for property owners who decline mitigation offers within participating States;
- Section 1361A(h)(6) of the Act requires FEMA to establish a process through which policyholders may appeal insurance rate increases imposed when declining offers of mitigation, and to submit a report to Congress on rules, procedures, and administration of this process;
- Section 1361A(j)(1) of the Act requires FEMA to develop rules governing procedures for the distribution of funds to States; and
- Section 1361A(j)(2) of the Act requires FEMA to consult with State and local officials within 90 days of the passage of this Act to provide an oral presentation, on the record, of data and arguments for developing procedures for the distribution of funds to States and communities to carry out eligible mitigation activities.

Incentives and Consequences. Section 1361A of the Act provides FEMA with the authority to establish incentives and consequences designed to increase participation in the Pilot Program and to reduce the number of severe repetitive loss properties in the National Flood Insurance Program. Section 1361A(d)(2) of the Act allows FEMA to increase the Federal share of a grant awarded to recipients under the Pilot Program from 75 percent to 90 percent if the State has a FEMA-approved State mitigation plan consistent with 44 CFR Part 201 that specifies how the State will reduce the number of severe repetitive loss properties and if the State has taken actions to mitigate the severe repetitive loss properties within the State. Section 1361A(h)(1) and (2) of the Act requires FEMA to impose insurance premium rate increases for property owners who decline mitigation offers under the Pilot Program.

Notification. Section 1361A(e)(1)(A) through (C) and section 1361A(e)(2) of the Act require that FEMA identify and

notify all owners of severe repetitive loss properties, as well as States and communities, that their properties meet the definition of a severe repetitive loss property; and that the properties are eligible for assistance under this section. Section 1361A(e)(1)(D) and section 1361A(e)(1)(E) of the Act also require FEMA to notify severe repetitive loss property owners that there are insurance implications for declining offers of mitigation assistance proposed by States and/or communities under the Pilot Program and that there is a right to appeal provided for under this section. Section 1361A(h)(6) of the Act requires FEMA to establish a process for the Pilot Program through which policyholders can appeal the increase in their premiums if they turn down a mitigation offer. The Act limits grounds for appeal to those stated in section 1361A(h)(6)(A).

Eligible Activities. Section 1361A(c) of the Act identifies eligible mitigation activities, which are limited to: elevation, acquisition, relocation, flood proofing, minor physical localized flood control projects, and certain demolition and rebuild projects. Section 1361A(g)(1) of the Act places restrictions on the reuse of acquired land that are consistent with the requirements of section 404(b)(2)(B) of the Robert T. Stafford Disaster Relief and Emergency Assistance Act (42 U.S.C. 5170c(b)(2)(B)). Section 1361A(f)(3) of the Act requires that States and communities must consult with all property owners when selecting appropriate mitigation options, and notify each holder of recorded interest in a property of any offers of mitigation assistance.

Allocation of Funds. Section 1361A(f)(1) of the Act requires FEMA to provide assistance for properties in the order that will result in the greatest amount of savings to the National Flood Insurance Fund in the shortest period of time. Section 1361A(f)(5) of the Act stipulates that funds are to be distributed based upon the percentage of severe repetitive loss properties within the State, and identifies additional provisions for the redistribution of unspent funds.

Rules. Section 1361A(j)(1) of the Act requires FEMA to develop procedures for the distribution of funds under the Pilot Program for the Mitigation of Severe Repetitive Loss Properties and to ensure that the procedures meet the following criteria:

- Require the Director to notify States and communities of the availability of grant funding and that participation in the Pilot Program is optional;
- Provide that the Director may assist States and communities in identifying severe repetitive loss properties;
- Allow States and communities to select properties to be mitigated and the eligible mitigation activity to be performed; and
- Require each State or community to submit a list of severe repetitive loss properties they would like to be the subject of eligible activities.

Consultation. FEMA is providing letters of invitation to the Consultation meeting to representatives from the Association of State Floodplain Managers (ASFPM), the National Emergency Management Association (NEMA), the International Emergency Management Association (IEMA), other interested organizations, representatives from all States, and representatives from communities with 20 or more severe repetitive loss properties. Those wishing to submit written comments should send them to the to the Rules Docket Clerk, Office of the General Counsel, Federal Emergency Management Agency, 500 C Street, SW., room 840, Washington DC 20472, (facsimile) 202–646–4536, or (e-mail) *FEMA–RULES@dhs.gov.*

While the focus of this meeting will be to solicit input for FEMA to consider on the distribution of funds under the Pilot Program, invitees may respond to any of the questions below in their oral or written comments. Section 1361A(j)(2) of the Act specifically directs FEMA to consult on the process for distribution of funds, however FEMA also wishes to gather comments on the overall Program from our partners and stakeholders. FEMA is soliciting responses to the following questions:

1. What key factors should FEMA consider in developing the Pilot Program for Mitigation Severe Repetitive Loss Properties under section 1361A?
2. What parameters should FEMA use to define severe repetitive loss for multi-family structures consisting of five or more residences?
3. What process should FEMA use to notify property owners that their property is considered a severe repetitive loss property as defined by the statute?
4. What criteria should FEMA consider when allocating funds to States and/or communities under the Pilot Program? Should FEMA consider base allocations for States with higher numbers of severe repetitive loss properties?
5. Should there be caps on Pilot Program funding for States and communities similar to Flood Mitigation Assistance program funds? If so, how would the cap amounts be determined?
6. What criteria should FEMA use to review and approve State mitigation plans consistent with 44 CFR Part 201 to ensure that they contain recommended actions to mitigate severe repetitive loss properties?
7. What criteria should FEMA use to make the determination that a State has taken actions to reduce the number of severe repetitive loss properties in its communities?
8. What criteria should FEMA use to determine projects that will result in the greatest amount of savings to the National Flood Insurance Fund? How should the criteria relate to current FEMA procedures for determining cost effectiveness?
9. What types of assistance do States and communities want from FEMA when making offers to owners of severe repetitive loss properties?
10. What role should States and communities have in the appeals process for severe repetitive loss property owners who decline mitigation offers under the Pilot Program? What rules and procedures should be contained in the appeals process?

Dated: September 10, 2004.

David I. Maurstad,

Acting Director Mitigation Division, Emergency Preparedness and Response Directorate, Department of Homeland Security.

[FR Doc. 04–20761 Filed 9–14–04; 8:45 am]

BILLING CODE 9110–41–P

DEPARTMENT OF THE INTERIOR

Fish and Wildlife Service

Receipt of Applications for Endangered Species Permits

AGENCY: Fish and Wildlife Service, Interior.

ACTION: Notice of receipt of applications for permits.

SUMMARY: The public is invited to comment on the following applications to conduct certain activities with endangered species. We provide this notice pursuant to section 10(c) of the Endangered Species Act of 1973, as amended (16 U.S.C. 1531 *et seq.*).

DATES: We must receive written data or comments on these applications at the address given below, by October 15, 2004.

ADDRESSES: Documents and other information submitted with these applications are available for review, subject to the requirements of the

Privacy Act and Freedom of Information Act, by any party who submits a written request for a copy of such documents to the following office within 30 days of the date of publication of this notice: Fish and Wildlife Service, 1875 Century Boulevard, Ste 200, Atlanta, Georgia 30345 (Attn: Victoria Davis, Permit Biologist).

FOR FURTHER INFORMATION CONTACT: Victoria Davis, telephone 404/679–4176; facsimile 404/679–7081.

SUPPLEMENTARY INFORMATION: The public is invited to comment on the following applications for permits to conduct certain activities with endangered species. If you wish to comment, you may submit comments by any one of the following methods. You may mail comments to the Service's Regional Office (see **ADDRESSES** section) or via electronic mail (e-mail) to *victoria_davis@fws.gov.* Please submit electronic comments as an ASCII file avoiding the use of special characters and any form of encryption. Please also include your name and return address in your e-mail message. If you do not receive a confirmation from the Service that we have received your e-mail message, contact us directly at the telephone number listed above (see **FOR FURTHER INFORMATION CONTACT** section). Finally, you may hand deliver comments to the Service office listed above (see **ADDRESSES** section).

Our practice is to make comments, including names and home addresses of respondents, available for public review during regular business hours. Individual respondents may request that we withhold their home address from the administrative record. We will honor such requests to the extent allowable by law. There may also be other circumstances in which we would withhold from the administrative record a respondent's identity, as allowable by law. If you wish us to withhold your name and address, you must state this prominently at the beginning of your comments. However, we will not consider anonymous comments. We will make all submissions from organizations or businesses, and from individuals identifying themselves as representatives or officials of organizations or businesses, available for public inspection in their entirety.

Applicant: Abyss Marine Technologies, Huntsville, Alabama, TE092868–0.

The applicant requests authorization to take (capture, identify, photograph, temporarily hold, tag, translocate, and release) the following species: Cumberland elktoe (*Alasmidonta atropurpurea*), Appalachian elktoe (*Alasmidonta raveneliana*), fat three-ridge (*Amblema neislerii*), birdwing pearlymussel (*Conradilla caelata*), fanshell (*Cyprogenia stegaria (=irroata)*), dromedary pearlymussel (*Dromus dromas*), Cumberlandian combshell (*Epioblasma brevidens*), oyster mussel (*Epioblasma capsaeformis*), yellow blossom (*Epioblasma florentina florentina*), tan riffleshell (*Epioblasma florentina walkeri*), upland combshell (*Epioblasma metastriata*), catspaw (*Epioblasma obliquata obliquata*), southern acornshell (*Epioblasma othcaloogensis*), southern combshell (*Epioblasma penita*), green blossom (*Epioblasma torulosa gubernaculum*), northern riffleshell (*Epioblasma torulosa rangiana*), Tubercled blossom (*Epioblasma torulosa torulosa*), shiny pigtoe (*Fusconaia cor* (=*edgariana*)), fine-rayed pigtoe (*Fusconaia cuneolus*), cracking pearlymussel (*Hemistena lata*), pink mucket (*Lampsilis abrupta* (=*orbiculata*)), shinyrayed pocketbook (*Lampsilis subangulata*), Alabama lampmussel (*Lampsilis virescens*), birdwing pearlymussel (*Conradilla caelata*), gulf moccasinshell (*Medionidus penicillatus*), Ochlockonee moccasinshell (*Medionidus simpsonianus*), Coosa moccasinshell (*Medionidus parvulus*), ringpink (*Obovaria retusa*), little-wing pearlymussel (*Pegias fabula*), white wartyback (*Plethobasus cicatricosus*), orangefoot pimpleback (*Plethobasus cooperianus*), clubshell (*Pleurobema clava*), black clubshell (*Pleurobema curtum*), southern clubshell (*Pleurobema decisum*), dark pigtoe (*Pleurobema furvum*), southern pigtoe (*Pleurobema georgianum*), Cumberland pigtoe (*Pleurobema gibberum*), flat pigtoe (*Pleurobema marshallii*), ovate clubshell (*Pleurobema perovatum*), rough pigtoe (*Pleurobema plenum*), oval pigtoe (*Pleurobema pyriforme*), heavy pigtoe (*Pleurobema taitianum*), fat pocketbook (*Potamilus capax*), triangular kidneyshell (*Ptychobranchus greeni*), rough rabbitsfoot (*Quadrula cylindrica strigillata*), winged mapleleaf (*Quadrula fragosa*), Cumberland monkeyface (*Quadrula intermedia*), Appalachian monkeyface (*Quadrula sparsa*), stirrupshell (*Quadrula stapes*), pale lilliput (*Toxolasma cylindrellus*), purple bean (*Villosa perpurpurea*), Cumberland bean (*Villosa trabalis*), Chipola slabshell (*Elliptio chipolaensis*), purple bankclimber (*Elliptoideus sloatianus*), finelined pocketbook (*Lampsilis altilis*), orangenacre mucket (*Lampsilis perovalis*), Alabama moccasinshell (*Medionidus acutissimus*), Alabama heelsplitter (*Potamilus inflatus*), Nashville crayfish (*Orconectes shoupi*), Squirrel Chimney cave shrimp (*Palaemonetes cummingi*), Alabama cave shrimp (*Palaemonias alabamae*), Kentucky cave shrimp (*Palaemonias ganteri*), Alabama cavefish (*Speoplatyrhinus poulsoni*), boulder darter (*Etheostoma wapiti*), vermillion darter (*Etheostoma chermocki*), watercrest darter (*Etheostoma nuchale*), Cahaba shiner (*Notropis cahabae*), palezone shiner (*Notropis albizonatus*), Alabama sturgeon (*Scaphirhynchus suttkusi*), blue shiner (*Cyprinella caerulea*), slackwater darter (*Etheostoma boschungi*), goldline darter (*Percina aurolineata*), snail darter (*Percina tanasi*), American crocodile (*Crocodylus acutus*), yellow-blotched map turtle (*Graptemys flavimaculata*), ringed map turtle (*Graptemys oculifera*), Alabama red-belly turtle (*Pseudemys alabamensis*), bog turtle (*Clemmys muhlenbergii*), and flattened musk turtle (*Sternotherus depressus*). The proposed activities would take place while conducting presence/absence surveys, population counting, and translocation activities throughout the species ranges in Alabama, Florida, Georgia, Kentucky, Mississippi, and Tennessee.

Applicant: Warren Scott Hall, The Advent Group, Brentwood, Tennessee, TE092860–0.

The applicant requests authorization to take (capture, identify, translocate, release) the Nashville crayfish (*Orconectes shoupi*) while conducting presence/absence surveys and relocation activities in relation to proposed construction activities. The proposed activities would occur in the Mill Creek drainage basin in Davidson and Williamson Counties, Tennessee.

Applicant: Marine Corps Base Camp Lajeune, John R. Townson, Camp Lejeune, North Carolina, TE091699–0.

The applicant requests authorization to take (capture, band, translocate, release, and monitor nests) of the red-cockaded woodpecker (*Picoides borealis*) while conducting population monitoring and management activities. The proposed activities would be carried out on Marine Corps Base Camp Lejeune, Onslow County, North Carolina.

Applicant: Samuel Mason Van Hook, II, Kissimmee Valley Forester, Babson Park, Florida, TE092854–0.

The applicant requests authorization to take (harass) red-cockaded woodpeckers (*Picoides borealis*) while installing insert boxes in Kenansville, Osceola County, Florida.

Applicant: McGuire Center/University of Florida, Thomas C. Emmel, Gainesville, Florida, TE092891–0.

The applicant requests authorization to take (capture, mark, release, recapture) Schaus' swallowtail (*Papilio aristodemus ponceanus*) while conducting population monitoring. The proposed activities would take place in the Florida Keys and South Florida mainland.

Applicant: The Nature Conservancy, Brain P. Van Eerden, Charlotteville, Virginia, TE092887–0.

The applicant requests authorization to harass the red-cockaded woodpecker (*Picoides borealis*) while installing restrictor plates on cavities and while installing artificial cavities. The proposed activities would take place on the Piney Grove Preserve, Sussex County, Virginia.

Applicant: Lewis & Associates LLC, Julian J. Lewis, Borden, Indiana, TE091701–0.

The applicant requests authorization to take (harass) the Kentucky cave shrimp (*Palaemonias ganteri*) while conducting presence/absence surveys. The proposed activities would occur in Graham Springs Groundwater Basin, Warren County, Kentucky.

Applicant: Dr. David H. Nelson, University of South Alabama, Mobile, Alabama, TE091704–0.

The applicant requests authorization to take (capture, identify, release) the Alabama red-bellied turtle (*Pseudemys alabamensis*), loggerhead sea turtle (*Caretta caretta*), and gopher tortoise (*Gopherus polyphemus*) while conducting scientific ecological research. The proposed activities would occur in Mobile and Baldwin Counties, Alabama.

Applicant: Dr. Jeanette Wyneken, Florida Atlantic University, Boca Raton, Florida, TE092912–0.

The applicant requests authorization to take (capture, transport, hold in captivity, release) the leatherback sea turtle (*Dermochelys coriacea*) while conducting laboratory experiments to characterize the behavioral responses to simulate longline gear. The activities would take place in Palm Beach County and Boca Raton, Florida (Biology Department of Florida Atlantic University) and will be released at sea when the study is complete.

Applicant: Florida Power & Light Company, Turkey Point Power Plant, Juno Beach, Florida, TE092945–0.

The applicant requests authorization to take (capture, mark, recapture, insert chips in the tail, insert Hobotemp dataloggers in the interior and exterior of nests, take scute samples) the American crocodile (*Crocodylus acutus*) while conducting management activities. The proposed activities would take place at Florida Power & Light Turkey Point Power Plant cooling canals, Dade County, Florida.

Dated: August 31, 2004.

Cynthia K. Dohner,

Deputy Regional Director, Southeast Region.

[FR Doc. 04–20773 Filed 9–14–04; 8:45 am]

BILLING CODE 4310–55–P

DEPARTMENT OF THE INTERIOR

Fish and Wildlife Service

Receipt of Application for an Incidental Take Permit by the Alabama Department of Conservation and Natural Resources for Proposed Improvements to Gulf State Park Hotel/Convention Center & Pavilion, Gulf Shores, Baldwin County, AL

AGENCY: Fish and Wildlife Service, Interior.

ACTION: Notice of availability of application for an incidental take permit, habitat conservation plan and environmental assessment.

SUMMARY: The Alabama Department of Conservation and Natural Resources (Applicant) has applied to the Fish and Wildlife Service (Service) for an incidental take permit [ITP] under section 10(a)(1)(B) of the Endangered Species Act of 1973 (16 United States Code [U.S.C.] 1531 et seq.), as amended (Act) for the take of Alabama beach mouse (*Peromyscus polionotus ammobates*) (ABM). The proposed take would be incidental to otherwise lawful activities, including the demolition of the current facility, site grading, and construction and development of a new facility. The proposed facility would consist of a seven-story hotel with a total of 350 guest rooms, a beach inn with 100 guest rooms, four beach side cottages with a total of 16 rooms, a new beach pavilion, and other amenities. The proposed project would result in a net gain of 3.16 acres of ABM habitat. The proposed action would involve approval of the Habitat Conservation Plan (HCP) developed by the applicant, as required by section 10(a)(2)(B) of the Act, to minimize and mitigate for incidental take of the federally listed endangered Alabama beach mouse (*Peromyscus polionotus ammobates*) (ABM), the threatened green sea turtle (*Chelonia mydas*), the threatened loggerhead turtle, (*Caretta caretta*), and the endangered Kemp's ridley sea turtle (*Lepidochelys kempii*). A detailed description of the mitigation and minimization measures to address the effects of the project on the ABM and sea turtles is provided in the applicant's HCP, the Service's Environmental Assessment and in the **SUPPLEMENTARY INFORMATION** section below. The Service announces the availability of an Environmental Assessment (EA) and Habitat Conservation Plan/Application for Incidental Take.

DATES: Written comments on the ITP application, HCP and EA should be sent to the Service's Regional Office (see **ADDRESSES**) and should be received on or before October 15, 2004.

ADDRESSES: Persons wishing to review the application, HCP and EA may obtain a copy by writing the Service's Southeast Regional Office, Atlanta, Georgia. Documents will also be available for public inspection by appointment during normal business hours at the Regional Office, 1875 Century Boulevard, Suite 200, Atlanta, Georgia 30345, (Attn: Endangered Species Permits), or, Ecological Services Field Office, 1208–B Main Street, Daphne, Alabama 36526. Written data or comments concerning the application or HCP should be submitted to the Regional Office. Please reference Gulf State Park Reconstruction and the permit number TE–072831–0 in requests for the documents discussed herein.

FOR FURTHER INFORMATION CONTACT: Mr. Joe Johnston, Regional Project Manager, (see **ADDRESSES** above), telephone: 404/679–4155; or Ms. Barbara Allen, Fish and Wildlife Biologist, Daphne Field Office (see **ADDRESSES**), telephone: 251/441–5873.

SUPPLEMENTARY INFORMATION: We announce the availability of an EA and HCP application for an incidental take permit. The EA is an assessment of likely environmental impacts associated with this project. Copies of these documents may be obtained by making a request, in writing, to the Regional Office (see **ADDRESSES**). This notice advises the public that we have opened the comment period on the permit application, which includes an HCP and the EA. This notice is provided under section 10 of the Act and NEPA regulations at 40 CFR 1506.6.

We specifically request information, views, and opinions from the public via this notice on the Federal action, including the identification of any other aspects of the human environment not already identified in the EA. Further, we specifically solicit information about the adequacy of the HCP as measured against our ITP issuance criteria found in 50 CFR parts 13 and 17.

If you wish to comment, you may submit comments by any one of several methods. Please reference Gulf State

Park Reconstruction and permit number TE–072831–0 in your comments. You may mail comments to the Service's Regional Office (see **ADDRESSES**). You may also comment via the Internet to *joe_johnston@fws.gov.* Please submit comments over the Internet as an ASCII file avoiding the use of special characters and any form of encryption. Please also include your name and return address in your Internet message. If you do not receive a confirmation from us that we have received your Internet message, contact us directly at either telephone number listed (see **FOR FURTHER INFORMATION**).

Finally, you may hand deliver comments to either Service office listed (see **ADDRESSES**). Our practice is to make comments, including names and home addresses of respondents, available for public review during regular business hours. Individual respondents may request that we withhold their home address from the administrative record. We will honor such requests to the extent allowable by law. There may also be other circumstances in which we would withhold from the administrative record a respondent's identity, as allowable by law. If you wish us to withhold your name and address, you must state this prominently at the beginning of your comments. We will not, however, consider anonymous comment. We will make all submissions from organizations or businesses, and from individuals identifying themselves as representatives or officials of organizations or businesses, available for public inspection in their entirety.

The ABM is one of eight subspecies of the old field mouse restricted to coastal dunes. We estimate that ABM historically occupied about 28 miles [mi] of shoreline. By 1987, the total occupied linear, shoreline habitat for the ABM, Choctawhatchee, and Perdido Key beach mice was estimated at less than 22 mi. Monitoring (trapping and field observations) of the ABM population on other private lands that hold, or are under review for, an ITP during the last five years indicates the Fort Morgan Peninsula remains occupied (more or less continuously) by ABM along its primary and secondary dunes, and interior habitats.

The ABM is known to occupy about 55.8 acres of land within the action area of the project. At this time, ABM have not been recorded on or west of the existing hotel and convention center compound. Construction and occupancy of the new park facilities may result in the incidental taking of ABM. The applicant, recognizing the potential for such an event, is seeking the issuance of an incidental take permit for the ABM from us.

The proposed project will include the demolition, removal and off-site disposal of all existing above-ground structures and paved surfaces, south of Highway 182. Items to be removed include the following:

A. About 16 acres of pavement from existing driveways and parking areas;

B. Twelve existing hotel units (cottages) and two associated maintenance buildings;

C. One abandoned tennis court; and

D. The convention center and associated pool and deck area.

Land where the hotel and convention center now stand will be used for the new hotel center or returned to its natural state. This will result in restoration of 14.7 acres of dune habitat that will adjoin verified occupied ABM habitat to the east. The applicant's restoration of these 14.7 acres provides for a net gain of 3.16 acres of habitat over that which currently exists in the action area. All of these acres would be capable of supporting the ABM.

With the implementation of the habitat enhancement measures outlined in the applicant's HCP, the quality of existing habitat will be improved. Construction activities associated with site preparation, heavy equipment operations, and site alterations within habitat occupied by ABM may impact individuals by crushing or burying them in their burrows, or by impairing essential breeding, feeding, or sheltering behaviors.

Through project planning minimization effects, impacts to ABM habitat resulting from project conservation have been limited to 11.55 acres. This impact is primarily confined to three areas: (1) 4.54 acres west of the entrance road to Gulf State Park Pier; (2) 5.88 acres located east of the same entrance road and (3) 1.13 acres located around the pavilion. At this time, although the first two areas (near the existing hotel and convention center) appear to be suitable habitat, they are not known to contain ABM nor do they adjoin any known occupied habitat. The third area, near the pavilion site, is known to support ABM. This area will be directly affected by construction of buildings and associated infrastructure.

The majority of the new building and construction efforts will remain within the footprint of the currently impacted area. There are 2.1 acres of scrub dunes, not suitable for ABM use, which will be impacted by the proposed action. However, since this acreage is not suitable for the ABM, its loss is not considered as an adverse impact to the ABM.

Construction activities associated with site preparation, heavy equipment operations, and site alterations within habitat occupied by ABM may impact ABM by crushing or burying them in their burrows, or by impairing essential breeding, feeding, or sheltering behaviors. Following construction, use of the area may also result in take of ABM due to inadequate garbage or refuse management that could attract ABM competitors or predators, and lights that may alter ABM nocturnal behavioral patterns. Boardwalks running perpendicular to the beach will act as a safeguard against pedestrian use of the dune system that may cause erosion and the loss of habitat required for ABM shelter, food, and reproduction.

The EA considers the effects of three project alternatives, including an alternative that would result in no new construction on the project site. Alternative 1 would not be economically feasible for the applicant. Alternative 2 and 3 involve the proposed development of 44.29 or 54.09 acres of a 137.8 acre action area in connection with the replacement, construction, occupancy, use, operation, and maintenance of the proposed new Gulf State Park Hotel/Convention Center, lodging facilities, and parking. The difference between these two alternatives relate to the amount of habitat restored and preserved for the ABM.

Alternative 3, the preferred alternative involves the greatest amount of habitat restoration and preservation and includes revisions designed to avoid or minimize take by reducing the impacts to habitat and enhance restoration efforts while still providing the necessary infrastructure improvements to increase use of the Park and provide an influx of about $65 million per year (increase of $52 million per year) to the local economy. The resulting alternative was chosen as the preferred alternative and would create a net gain of 3.16 acres of habitat exhibiting constituent elements of ABM CH. This alternative will allow 14.7 acres of currently degraded or developed land (which is adjoining ABM occupied habitat), to be restored to natural habitat with the potential for future ABM occupancy.

Under section 9 of the Act and its implementing regulations, ''taking'' of endangered and threatened wildlife is prohibited. However, we, under limited circumstances, may issue permits to take such wildlife if the taking is incidental to and not the purpose of otherwise lawful activities. The applicants have prepared a HCP which includes measures for the long-term

protection, management, and enhancement of ABM habitat as required for the incidental take permit application as part of the proposed project

We will evaluate whether the issuance of the section 10(a)(1)(B) ITP complies with section 7 of the Act by conducting an intra-Service section 7 consultation. The results of the biological opinion, in combination with the above findings, will be used in the final analysis to determine whether or not to issue the ITP.

Dated: August 25, 2004.

Sam D. Hamilton,

Regional Director, Southeast Region.

[FR Doc. 04–20772 Filed 9–14–04; 8:45 am]

BILLING CODE 4310–55–P

DEPARTMENT OF THE INTERIOR

Bureau of Indian Affairs

Land Acquisitions; Picayune Rancheria of California

AGENCY: Bureau of Indian Affairs, Interior.

ACTION: Notice of final agency determination to take land into trust under 25 CFR part 151.

SUMMARY: The Principal Deputy Assistant Secretary—Indian Affairs made a final agency determination to acquire approximately 48.53 acres, of land into trust for the Picayune Rancheria of California on June 30, 2004. This notice is published in the exercise of authority delegated by the Secretary of the Interior to the Principal Deputy Assistant Secretary—Indian Affairs by 209 Departmental Manual 8.1.

FOR FURTHER INFORMATION CONTACT: George Skibine, Office of Indian Gaming Management, Bureau of Indian Affairs, MS–4543 MIB, 1849 C Street, NW., Washington, DC 20240; Telephone (202) 219–4066.

SUPPLEMENTARY INFORMATION: This notice is published to comply with the requirement of 25 CFR 151.12(b) that notice be given to the public of the Secretary's decision to acquire land in trust at least 30 days prior to signatory acceptance of the land into trust. The purpose of the 30-day waiting period in 25 CFR 151.12(b) is to afford interested parties the opportunity to seek judicial review of final administrative decisions to take land in trust for Indian tribes and individual Indians before transfer of title to the property occurs. On June 30, 2004, the Principal Deputy Assistant Secretary—Indian Affairs decided to accept approximately 48.53 acres of land into trust for the Picayune Rancheria of California under the authority of the Indian Reorganization Act of 1934, 25 U.S.C. 465. The Picayune Rancheria was restored to federal recognition pursuant to the Hardwick Stipulation of Judgement (No. C–79–1710SW) for Madera County, filed on June 16, 1987. The Stipulation restored the exterior boundaries of the Rancheria and declared all lands within the boundaries as Indian Country. The 48.53 acres are located within the boundaries of the Rancheria.

The real property consists of 48.53 acres situated in Madera County, California. The legal description of the property is as follows:

Parcel 1:

That portion of the North half of the Northwest quarter of the Northeast quarter and the West half of the Northwest quarter of the Northeast quarter of the Northeast quarter of Section 29, Township 8 South, Range 21 East, Mount Diablo Base and Meridian, according to the official Plat thereof, lying Northeasterly of the Northeasterly line of a strip of land 50 feet in width conveyed to the County of Madera, State of California, for highway purposes by deed dated September 11, 1961 and recorded in Records of Madera County in Volume 808 of Official records at page 410.

Excepting therefrom: That portion of the Northeast quarter of Section 29, Township 8 South, Range 21 East, Mount Diablo Base and Meridian, according to the Official Plat thereof described as follows:

Beginning at the Southeast quarter corner of the West half of the Northwest quarter of the Northeast quarter of the Northeast quarter of said Section 29; thence West along the South line of the North half of the Northeast quarter of the North half of the Northeast quarter of said Section 580.8 feet; thence Northeasterly 600 feet, more or less, to a point in the East line of the West half of the Northwest quarter of the Northeast of the Northeast quarter of Section 29, located 150 feet North from the Southeast corner thereof; thence South 1,590 feet to the point of beginning.

Parcel 2:

All that portion of the South half of the Northwest quarter of the Northeast quarter and the West half of the Southwest quarter of the Northeast quarter of the Northeast quarter of Section 29, Township 8 South, Range 21 East, Mount Diablo Base and Meridian, according to the Official Plat thereof, lying North and Northeasterly of the North and Northeasterly boundary of County Road No. 417.

Parcel 3:

That portion of the Northeast quarter of Section 29, Township 8 South, Range 12 East, Mount Diablo Base and Meridian, according to the Official Plat thereof described as follows:

Beginning at the Southeast quarter of the West half of the Northwest quarter of the Northeast quarter of the Northeast quarter of said Section 29; thence West along the South line of the North half of the North half of the Northeast quarter of said Section 580.8 feet; thence Northeasterly 600 feet, more or less, to a point in the East line of the West half of the Northwest quarter of the Northeast quarter of Section 29, located 150 feet North from the Southeast corner thereof, thence South 150 feet to the point of beginning.

APN: 054–330–025 (Parcel 1) & 054–330–026 (Parcels 2 & 3) containing 27.49 acres, more or less.

Parcel "A":

All that portion of the North half of the Northwest quarter of the Northeast quarter of Section 29, Township 8 South, Range 21 East, Mount Diablo Base and Meridian, according to the Official Plats thereof, lying Southwesterly of County Road No. 417.

APN: 054–330–015 (containing 3.92 acres, more or less).

Parcel "B":

Parcel 1 of Parcel Map No. 1870, according to the map thereof, recorded August 21, 1981 in Book 27 of Maps, at page 182, Madera County Records.

APN: 054–330–031 (containing 5.92 acres more or less).

Parcel "C":

Parcel 2 of Parcel Map No 1870, according to the map thereof, recorded August 21, 1981 in Book 27 of Maps, at page 182, Madera County Records.

APN: 054–330–032 (containing 5.92 acres, more or less).

Parcel "D":

Parcel 3 of Parcel Map No. 1870, according to the map thereof, recorded August 21, 1982 in Book 27 of Maps, at page 182, Madera County Records.

APN: 054–330–033 (containing 5.28 acres, more or less).

Dated: July 1, 2004.

Aurene M. Martin,

Principal Deputy Assistant Secretary—Indian Affairs.

[FR Doc. 04–20731 Filed 9–14–04; 8:45 am]

BILLING CODE 4310–4N–P

DEPARTMENT OF THE INTERIOR

Bureau of Land Management

[WY–920–1310–01; WYW151960]

Notice of Proposed Reinstatement of Terminated Oil and Gas Lease

AGENCY: Bureau of Land Management, Interior.

ACTION: Notice of proposed reinstatement of terminated oil and gas lease.

SUMMARY: Under the provisions of 30 U.S.C. 188(d) and (e), and 43 CFR 3108.2–3(a) and (b)(1), the Bureau of Land Management (BLM) received a petition for reinstatement of oil and gas lease WYW151960 for lands in Johnson County, Wyoming. The petition was filed on time and was accompanied by all the rentals due since the date the lease terminated under the law.

FOR FURTHER INFORMATION CONTACT: Bureau of Land Management, Pamela J. Lewis, Chief, Fluid Chief Minerals Adjudication, at (307) 775–6176.

SUPPLEMENTARY INFORMATION: The lessee has agreed to the amended lease terms for rentals and royalties at rates of $10.00 per acre or fraction thereof, per year and 16⅔ percent, respectively. The lessee has paid the required $500 administrative fee and $166 to reimburse the Department for the cost of this **Federal Register** notice. The lessee has met all the requirements for reinstatement of the lease as set out in Section 31(d) and (e) of the Mineral Lands Leasing Act of 1920 (30 U.S.C. 188), and the Bureau of Land Management is proposing to reinstate lease WYW151960 effective March 1, 2004, under the original terms and conditions of the lease and the increased rental and royalty rates cited above. BLM has not issued a valid lease affecting the lands.

Pamela J. Lewis,

Chief, Fluid Minerals Adjudication.

[FR Doc. 04–20758 Filed 9–14–04; 8:45 am]

BILLING CODE 4310–22–P

DEPARTMENT OF THE INTERIOR

Bureau of Land Management

[WY–920–1310–01; WYW131747]

Notice of Proposed Reinstatement of Terminated Oil and Gas Lease

AGENCY: Bureau of Land Management, Interior.

ACTION: Notice of proposed reinstatement of terminated oil and gas lease.

SUMMARY: Under the provisions of 30 U.S.C. 188(d) and (e), and 43 CFR 3108.2–3(a) and (b)(1), the Bureau of Land Management (BLM) received a petition for reinstatement of oil and gas lease WYW131747 for lands in Johnson County, Wyoming. The petition was filed on time and was accompanied by all the rentals due since the date the lease terminated under the law.

FOR FURTHER INFORMATION CONTACT: Bureau of Land Management, Pamela J. Lewis, Chief, Fluid Chief Minerals Adjudication, at (307) 775–6176.

SUPPLEMENTARY INFORMATION: The lessee has agreed to the amended lease terms for rentals and royalties at rates of $10.00 per acre, or fraction thereof, per year and 16⅔ percent, respectively. The lessee has paid the required $500 administrative fee and $166 to reimburse the Department for the cost of this **Federal Register** notice. The lessee has met all the requirements for reinstatement of the lease as set out in Section 31(d) and (e) of the Mineral Lands Leasing Act of 1920 (30 U.S.C. 188), and the Bureau of Land Management is proposing to reinstate lease WYW131747 effective March 1, 2004, under the original terms and conditions of the lease and the increased rental and royalty rates cited above. BLM has not issued a valid lease affecting the lands.

Pamela J. Lewis,

Chief, Fluid Minerals Adjudication.

[FR Doc. 04–20759 Filed 9–14–04; 8:45 am]

BILLING CODE 4310–22–P

DEPARTMENT OF THE INTERIOR

Bureau of Land Management

[CA–170–1430–EU; CACA 41111]

Realty Action; Direct Sales of Public Lands in Mono County, CA

AGENCY: Bureau of Land Management, Interior.

ACTION: Notice.

SUMMARY: The following described public lands in Mono County, California, are being considered for 2 direct sales under sections 203 and 209 of the Federal Land Policy and Management Act of 1976 (90 Stat. 2750, 43 U.S.C. 1713 and 1719), at fair market value. The parcels proposed for sale are identified as suitable for disposal in the amended Bishop Resource Management Plan, June 18, 2004.

DATES: Submit comments on or before November 1, 2004.

ADDRESSES: Submit comments on the proposed sales to the Bureau of Land Management (BLM), Bishop Field Manager, 351 Pacu Lane, Suite 100, Bishop, CA 93514.

FOR FURTHER INFORMATION CONTACT: BLM Bishop Field Office, 351 Pacu Lane, Suite 100, Bishop, CA 93514 or Larry Primosch at (760) 872–5031.

SUPPLEMENTARY INFORMATION: The Bridgeport Indian Colony (Tribe) has a 40-acre reservation near Bridgeport, CA and desires to acquire public land adjacent to the reservation to provide for employment, housing, economic development, and community services. Based on a 1995 feasibility analysis and the Tribe's 2003 development plan, the proposed use of the land would be for 10 residential houses, mini-mart, cultural center, gas station, RV park, mini-storage facility, community recreation center, and open space. It is expected that tribal members would be employed for the construction phase and operation of the businesses once established. Two lots are proposed for sale to the Tribe and are described as follows:

Mount Diablo Meridian, California

T. 5 N., R. 25 E., Sec. 28,
Lots 1 and 2; totaling 31.86 acres.

Two lots at the same location, one containing the highway right-of way, are proposed for sale to the State of California, Transportation Department (Caltrans). The lands proposed for sale are described as follows:

Mount Diablo Meridian, California

T. 5 N., R. 25 E., Sec. 28,
Lots 3 and 4; totaling 8.51 acres.

Direct Sale is appropriate because: The parcels are considered unmanageable; the parcels are in proximity to the Indian reservation; the lands are identified for transfer to a State or local government; and numerous rights-of-way encumber the parcels, some held by the Reservation or Caltrans. Both sales will be phased to accommodate scientific data recovery on a cultural site within the parcels. Final decisions on the sale proposals will be made following additional public comment prior to completion of an environmental analysis. A BLM appraisal dated June 10, 2004, estimated the Fair Market Value at $2,000 per acre. The appraisal is available at the BLM, Bishop Field Office. The mineral estate has been determined to be of no value.

The patent(s) will be subject to the following rights-of-way:

CAS 2240 SCE Power line;

CAS 059135 GTE (Verizon) Telephone line;

CACA 6432 GTE (Verizon) Underground telephone cable;

CACA 42666 Verizon Fiber Optic line;

CACA 6044 Indian Health Services, Pipeline and Power line;

CACA 4083 BIA Road, dike, ditch and fill area;

CACA 8757 Bridgeport PUC Pipeline;

CACA 5332 SCE Power line, guy and anchor point;

The patents will also contain a reservation for ditches and canals.

On September 15, 2004, the public lands described above are segregated from all forms of appropriation under the public land laws, including the mining laws until June 13, 2005. The segregative effect shall terminate as provided by 43 CFR 2711.1–2(d) and 2720.1–1(b).

Dated: July 22, 2004.

Joseph Pollini,

Acting Field Manager, Bishop Field Office.

[FR Doc. 04–20754 Filed 9–14–04; 8:45 am]

BILLING CODE 4310–40–P

DEPARTMENT OF THE INTERIOR

Bureau of Land Management

[NV–055–5853–EU]

Notice of Realty Action; Direct Sale of Public Lands in Clark County, NV, N–77383

AGENCY: Bureau of Land Management, Interior.

ACTION: Notice.

SUMMARY: The following described lands, aggregating approximately 2.5 acres, have been designated for disposal and will be offered as a direct sale of public lands in Clark County, Nevada, to Coast Hotels and Casinos, Inc.

DATES: Comments regarding the proposed sale must be received by the Bureau of Land Management (BLM) on or before November 1, 2004.

ADDRESSES: Comments regarding the proposed sale should be addressed to: Field Manager, Las Vegas Field Office, Bureau of Land Management, 4701 N. Torrey Pines Drive, Las Vegas, Nevada 89130.

More detailed information regarding the proposed sale and the land involved may be reviewed during normal business hours (7:30 a.m. to 4:30 p.m.) at the Las Vegas Field Office (LVFO).

FOR FURTHER INFORMATION CONTACT: You may contact Judy Fry, Program Lead, Sales at (702) 515–5081 or by email at *jfry@nv.blm.gov.* You may also call (702) 515–5000 and ask to have your call directed to a member of the Sales Team.

SUPPLEMENTARY INFORMATION: The lands hereinafter described, consisting of 2.5 acres, more or less, have been authorized and designated for disposal under the Southern Nevada Public Land Management Act of 1998 (112 Stat. 2343), as amended by the Clark County Conservation of Public Land and Natural Resources Act of 2002 (116 Stat. 1994) (hereinafter ''SNPLMA''). The land will be offered noncompetitively as a direct sale in accordance with the applicable provisions of Sections 203 and 209 of the Federal Land Policy Management Act of 1976 (43 U.S.C. 1713 and 1719), respectively, its implementing regulations, and in accordance with 43 CFR 2711.3–3, at not less than the appraised Fair Market Value (FMV) of the parcel, which has been determined to be $1,324,000.00.

43 CFR 2711.3–3(a) states that ''Direct sales (without competition) may be utilized, when in the opinion of the authorized officer, a competitive sale is not appropriate and the public interest would best be served by a direct sale. Examples include, but are not limited to * * *'' (2) A tract identified for sale that is an integral part of a project of public importance and speculative bidding would jeopardize a timely completion and economic viability of the project; or * * * (4) The adjoining ownership pattern and access indicate a direct sale is appropriate''.

Clark County, Nevada has proposed that the 2.5 acre parcel be sold to Coast Hotels and Casinos, Inc (Coast) as an integral part of a public project that includes a new highway interchange on I–15, an 84-inch water pipeline and a significant realignment of the Silverado Ranch Boulevard right-of-way. During design of the long-planned I–15 interchange, Clark County discovered that a significant shift of alignment outside of the existing right-of-way would be required because of irreconcilable conflicts with the location of the water pipeline. The County has identified the need to locate the I–15 interchange at Silverado Ranch Boulevard. Since the interchange cannot be relocated additional right-of-way is necessary to accommodate the freeway interchange, the Southern Nevada Water Authority pipeline and a major arterial street; impacting 2.25 acres of private land owned by Coast. Coast has donated 2.25 acres to Clark County to permit construction of the above public projects, but needs to acquire other land to replace the donation. This donation and the subsequent BLM direct sale to Coast would alleviate the need for Clark County to pursue other means to acquire the acreage for the projects and potentially avoid the delay and taxpayer expense that any alternative such as condemnation would cause. Clark County has asked that federal lands immediately adjacent to the donated property be sold to Coast at FMV to enable Coast to replace the donated land and avoid unduly diminishing the size and value of the their aggregate property. Clark County expressed specific concerns that speculative bidding on the federal parcel could prevent Coast from purchasing the replacement lands, thus stopping the donation and impairing the County's ability to complete the public project. The 2.25 acre donation from Coast to the County, which has been completed and recorded in the County, is a term and condition of the FMV direct sale to Coast. In the opinion of the authorized officer, a direct sale to Coast best serves the public interest.

In this instance, Coast's ownership of adjacent parcels meets the regulation's adjoining ownership and access test as well. Coast owns parcels adjacent to the federal parcel on the south and east and controls access from those points. The federal parcel is landlocked by I–15, without access, on the west. County-owned land adjoins the federal parcel on the north. The County states that they will sell this remnant parcel to Coast, and an easement for a future interior road (Ensworth Street) will be abandoned, resulting in the federal parcel being landlocked by Coast-owned properties.

The proposed sale is consistent with the BLM Las Vegas Resource Management Plan and would serve important public objectives which cannot be achieved prudently or feasibly elsewhere. The land contains no other known public values. The environmental assessment, map, and approved appraisal report covering the proposed sale are available for review at the BLM, Las Vegas Field Office, Las Vegas, Nevada (LVFO).

Land Proposed for Sale

Mount Diablo Meridian, Nevada

T. 22 S., R. 61 E.,

Sec. 29, SE¼NW¼NW¼NE¼.

The lands described above contain 2.5 acres, more or less.

When the parcel of land is sold, the locatable mineral interests therein will be sold simultaneously as part of the sale. The land identified for sale has no known locatable mineral value. Acceptance of the offer to purchase will constitute an application for conveyance of the locatable mineral interests. In conjunction with the final payment, the applicant will be required to pay a $50.00 non-refundable filing fee for processing the conveyance of the locatable mineral interest.

Terms and Conditions of Sale

The proposed direct sale to Coast is contingent upon the County receiving beforehand the 2.25 acre donation from Coast on terms satisfactory to the County. The 2.5 acre BLM sale parcel is subject to the following:

1. All discretionary leaseable and saleable mineral deposits are reserved; but, permittees, licensees, and lessees retain the right to prospect for, mine, and remove such minerals owned by the United States under applicable law and any regulations that the Secretary of the Interior may prescribe, including all necessary access and exit rights.

2. A right-of-way is reserved for ditches and canals constructed by authority of the United States under the Act of August 30, 1890 (43 U.S.C. 945).

3. The parcel is subject to valid existing rights. Parcels may also be subject to applications received prior to publication of this Notice if processing the application would have no adverse affect on the federally approved Fair Market Value (FMV).

4. The parcel is subject to reservations for road, public utilities and flood control purposes, both existing and proposed, in accordance with the local governing entities' Transportation Plans.

5. No warranty of any kind, express or implied, is given by the United States as to the title, physical condition or potential uses of the parcel of land proposed for sale; and the conveyance of any such parcel will not be on a contingency basis. However, to the extent required by law, all such parcels are subject to the requirements of section 120(h) of the Comprehensive Environmental Response Compensation and Liability Act, as amended (CERCLA) (42 U.S.C. 9620(h)).

6. All purchasers/patentees, by accepting a patent, agree to indemnify, defend, and hold the United States harmless from any cost, damages, claims, causes of action, penalties, fines, liabilities, and judgments of any kind or nature arising from the past, present, and future acts or omissions of the patentee or their employees, agents, contractors, or lessees, or any third-party, arising out of or in connection with the patentee's use, occupancy, or operations on the patented real property. This indemnification and hold harmless agreement includes, but is not limited to, acts and omissions of the patentee and their employees, agents, contractors, or lessees, or any third party, arising out of or in connection with the use and/or occupancy of the patented real property which has already resulted or does hereafter result in; (1) Violations of Federal, State, and local laws and regulations that are now or may in the future become, applicable to the real property; (2) Judgments, claims or demands of any kind assessed against the United States; (3) Cost, expenses, or damages of any kind incurred by the United States; (4) Other releases or threatened releases of solid or hazardous waste(s) and/or hazardous substances(s), as defined by federal or state environmental laws; off, on, into or under land, property and other interests of the United States; (5) Other activities by which solids or hazardous substances or wastes, as defined by federal and state environmental laws are generated, released, stored, used or otherwise disposed of on the patented real property, and any cleanup response, remedial action or other actions related in any manner to said solid or hazardous substances or wastes; or (6) Natural resource damages as defined by federal and state law. This covenant shall be construed as running with patented real property and may be enforced by the United States in a court of competent jurisdiction.

7. Maps delineating the individual proposed sale parcel are available for public review at the BLM LVFO along with the appraisal.

8. Upon acceptance of the offer to purchase, Coast Casinos will submit 20% of the FMV to Bureau Land Management (BLM), Las Vegas Field Office, 4701 North Torrey Pines Drive, Las Vegas, and NV 89130. Within 180 days following payment of the deposit, Coast Casinos will remit the balance of the FMV to BLM in the form of a certified check, money order, bank draft or cashier's check made payable to the order of the Bureau of Land Management.

9. The BLM may accept or reject any or all offers, or withdraw any parcel of land or interest therein from sale, if, in the opinion of the authorized officer, consummation of the sale would not be fully consistent with FLPMA or other applicable laws or are determined to not be in the public interest. If not sold, any parcel described above in this Notice may be identified for sale at a later date without further legal notice.

10. Federal law requires bidders to be U.S. citizens 18 years of age or older; a corporation subject to the laws of any State or of the United States; a State, State Instrumentality, or political subdivision authorized to hold property, or an entity including, but not limited to, associations or partnerships capable of holding property or interest therein under the laws of the State of Nevada. Certification of qualification, including citizenship or corporation or partnership, must accompany the bid deposit.

Additional Information: In order to determine the value, through appraisal, of the parcel of land proposed to be sold, certain extraordinary assumptions may have been made of the attributes and limitations of the land and potential effects of local regulations and policies on potential future land uses. Through publication of this NORA, the BLM gives notice that these assumptions may not be endorsed or approved by units of local government. It is the buyer's responsibility to be aware of all applicable local government policies, laws, and regulations that would affect the subject lands, including any required dedication of lands for public uses. It is also the buyer's responsibility to be aware of existing or projected use of nearby properties. When conveyed out of federal ownership, the lands will be subject to any applicable reviews and approvals by the respective unit of local government for proposed future uses, and any such reviews and approvals will be the responsibility of the buyer. Any land lacking access from a public road or highway will be conveyed as such, and future access acquisition will be the responsibility of the buyer.

Public Comments

The BLM Field Manager, Las Vegas Field Office, 4701 North Torrey Pines Drive, Las Vegas, Nevada 89130 will receive the comments of the general public and interested parties up to 45 days after publication of this Notice in the **Federal Register**. Any adverse comments will be reviewed by the State Director, who may sustain, vacate, or modify this realty action in whole or in part. In the absence of any adverse comments this realty action will become the final determination of the Department of the Interior. Any comments received during this process, as well as the commentor's name and address, will be available to the public in the administrative record and/or pursuant to a Freedom of Information Act request. You may indicate for the record that you do not wish to have your name and/or address made available to the public. Any determination by the BLM to release or withhold the names and/or addresses of those who comment will be made on a case-by-case basis. A request from a commentor to have their name and/or address withheld from public release will be honored to the extent permissible by law.

Dated: August 17, 2004.

Angie Lara,

Assistant Field Manager.

[FR Doc. 04–20755 Filed 9–14–04; 8:45 am]

BILLING CODE 4310–HC–P

DEPARTMENT OF THE INTERIOR

Bureau of Land Management

[NV–050–5853–ES; N–77535(01)]

Notice of Realty Action; Lease/Conveyance for Recreation and Public Purposes

AGENCY: Bureau of Land Management, Interior.

ACTION: Notice of realty action.

SUMMARY: BLM has determined that land located in Clark County, Nevada is suitable for classification for lease/conveyance to the State of Nevada.

FOR FURTHER INFORMATION CONTACT: Jackie Gratton BLM Lead Community Specialist, (702) 515–5054.

SUPPLEMENTARY INFORMATION: The following described public land in Las Vegas, Clark County, Nevada has been examined and found suitable for lease/conveyance for recreational or public purposes under provisions of the Recreation and Public Purposes (R&PP) Act, as amended (43 U.S.C. 869 *et seq.*).

N–77535 (01)—The State of Nevada proposes to use the land for a Department of Motor Vehicle Class ''C'' licensing site (DMV), a Vehicle Identification Number inspection station, and other future State of Nevada facilities. It is anticipated that future facilities would be designed for office space; however, other uses such as training facilities, additional parking, and expansion of the proposed DMV or other needed/compatible facilities may be developed.

Mount Diablo Meridian, Nevada

T. 19 S., R. 61 E.,
Section 19, lot 19.
Consisting of 35.2 acres.

The land is not required for any federal purpose. Lease/conveyance is consistent with current Bureau planning for this area and would be in the public interest. The lease/conveyance, when issued, will be subject to the provisions of the Recreation and Public Purposes Act and applicable regulations of the Secretary of the Interior and will contain the following reservations to the United States:

1. A right-of-way thereon for ditches and canals constructed by the authority of the United States, Act of August 30, 1890 (43 U.S.C. 945).

2. All minerals shall be reserved to the United States, together with the right to prospect for, mine and remove such deposits from the same under applicable law and such regulations as the Secretary of the Interior may prescribe.

And will be subject to:

1. All valid and existing rights.

2. Those rights for public roads which have been granted to the City of North Las Vegas by right-of-way grant N–059611 pursuant to Title V of the Federal Land Policy and Management Act of October 21, 1976 (43 U.S.C. 1761).

3. Those rights for public utilities which have been granted to Southwest Gas Corporation by right-of-way grant N–75762 pursuant to Section 28 of the Mineral Leasing Act of 1920, as amended, (30 U.S.C. 185).

4. Those rights for public roads which have been granted to the City of North Las Vegas by right-of-way grant N–76357 pursuant to Title V of the Federal Land Policy and Management Act of October 21, 1976 (43 U.S.C. 1761).

Detailed information concerning this action is available for review at the office of the Bureau of Land Management, Las Vegas Field Office, 4701 N. Torrey Pines Drive, Las Vegas, Nevada 89130.

On September 15, 2004, the above described lands will be segregated from all other forms of appropriation under the public land laws, including the general mining laws, except for lease/conveyance under the Recreation and Public Purposes Act, leasing under the mineral leasing laws and disposal under the mineral material disposal laws.

Interested parties may submit comments regarding the proposed classification for lease/conveyance of the lands to the Field Manager, Las Vegas Field Office, 4701 N. Torrey Pines Drive, Las Vegas, Nevada 89130 until November 1, 2004.

Classification Comments

Interested parties may submit comments involving the suitability of the land for the proposed facilities. Comments on the classification are restricted to whether the land is physically suited for the proposal, whether the use will maximize the future use or uses of the land, whether the use is consistent with local planning and zoning or if the use is consistent with State and Federal programs.

Application Comments

Interested parties may submit comments regarding the specific use proposed in the application and plan of development, whether the BLM followed proper administrative procedures in reaching the decision or any other factor not related to the suitability of the land for the proposed DMV site, Vehicle Identification Number inspection station and other future State of Nevada facilities. Any adverse comments will be reviewed by the State Director who may sustain, vacate, or modify this realty action. In the absence of any adverse comments, the classification of the land described in the Notice will become effective on November 15, 2004. The lands will not be offered for lease/conveyance until after the classification becomes effective.

Dated: July 15, 2004.

Sharon DiPinto,

Assistant Field Manager, Division of Lands.

[FR Doc. 04–20757 Filed 9–14–04; 8:45 am]

BILLING CODE 4310–HC–P

DEPARTMENT OF THE INTERIOR

Bureau of Land Management

[MT–072–1220–HB]

Final Supplementary Rules for Fee Collection Sites Within the Area Managed by the Butte Field Office; MT

AGENCY: Bureau of Land Management, Interior.

ACTION: Notice.

SUMMARY: The Bureau of Land Management (BLM) Butte Field Office is implementing these supplementary rules in order to regulate fee collection at sites administered under the Land and Water Conservation Fund (43 U.S.C. 4601). The supplementary rules are necessary to help ensure that the public makes proper payment for recreational use of public lands facilities.

DATES: The final rules are effectively immediately.

ADDRESSES: Field Manager, Bureau of Land Management, Butte Field Office, 106 North Parkmont, Butte, Montana 59701. You may also contact the BLM by Internet e-mail at the following address: *MT_Butte_FO@blm.gov.*

FOR FURTHER INFORMATION CONTACT: Brad Rixford, Outdoor Recreation Planner, 106 N. Parkmont, Butte, Montana 59701, 406–533–7600.

SUPPLEMENTARY INFORMATION:

I. Public Comment Procedures

No comments were received.

II. Procedural Matters

Executive Order 12866, Regulatory Planning and Review

These supplementary rules are not a significant regulatory action and are not subject to review by Office of Management and Budget under Executive Order 12866. These supplementary rules will not have an effect of $100 million or more on the economy. They are not intended to affect commercial activity, but contain rules of conduct for public use of certain recreational areas. They will not adversely affect, in a material way, the economy, productivity, competition, jobs, the environment, public health or safety, or State, local, or tribal governments or communities. These proposed supplementary rules will not create a serious inconsistency or otherwise interfere with an action taken or planned by another agency. The supplementary rules do not alter the budgetary effects of entitlements, grants, user fees, or loan programs or the right or obligations of their recipients; nor do they raise novel legal or policy issues.

National Environmental Policy Act

The BLM has prepared an environmental assessment (EA) or management agreement and has found that the proposed supplementary rules would not constitute a major Federal action significantly affecting the quality of the human environment under section 102(2)(C) of the Environmental Protection Act of 1969 (NEPA), 42 U.S.C. 4332(2)(C). The supplementary rules merely contain rules to require payment of camping fees and display of tickets for use of certain recreational lands in Montana. These rules are designed to ensure proper payment for use of public land facilities. A detailed statement under NEPA is not required. BLM has placed the EA and the Finding of No Significant Impact (FONSI) on file in the BLM Administrative Record at the address specified in the **ADDRESSES** section.

Regulatory Flexibility Act

Congress enacted the Regulatory Flexibility Act (RFA) of 1980, as amended, 5 U.S.C. 601–612, to ensure that government regulations do not unnecessarily or disproportionately burden small entities. The RFA requires a regulatory flexibility analysis if a rule would have a significant economic impact, either detrimental or beneficial, on a substantial number of small entities. The supplementary rules do not pertain specifically to commercial or governmental entities of any size, but to public recreational use of specific public lands. Therefore, BLM has determined under the RFA that these proposed supplementary rules would not have a significant economic impact on a substantial number of small entities.

Small Business Regulatory Enforcement Fairness Act (SBREFA)

These supplementary rules do not constitute a ''major rule'' as defined at 5 U.S.C. 804(2). Again, the supplementary rules merely contain rules for fee payment for recreational use of certain public lands. The supplementary rules have no effect on business-commercial or industrial-use of the public lands.

Unfunded Mandates Reform Act

These supplementary rules do not impose an unfunded mandate on State, local or tribal governments or the private sector of more than $100 million per year; nor do these proposed supplementary rules have a significant or unique effect on State, local, or tribal governments or the private sector. The supplementary rules do not require anything of State, local, or tribal governments. Therefore, BLM is not required to prepare a statement containing the information required by the Unfunded Mandates Reform Act (2 U.S.C. 1531 *et seq.*)

Executive Order 12630, Governmental Actions and Interference With Constitutionally Protected Property Rights (Takings)

The supplementary rules do not represent a government action capable of interfering with constitutionally protected property rights. The supplementary rules do not address property rights in any form, and do not cause the impairment of anybody's property rights. Therefore, the Department of the Interior has determined that the supplementary rules would not cause a taking of private property or require further discussion of takings implications under this Executive Order.

Executive Order 13132, Federalism

The supplementary rules will not have a substantial direct effect on the states, on the relationship between the national government and the states, or on the distribution of power and responsibilities among the various levels of government. The supplementary rules affect land in only one state, Montana, and do not address jurisdictional issues involving the state government. Therefore, in accordance with Executive Order 13132, BLM has determined that these proposed supplementary rules do not have sufficient Federalism implications to warrant preparation of a Federalism Assessment.

Executive Order 12988, Civil Justice Reform

Under Executive Order 12988, the Office of the Solicitor has determined that these proposed supplementary rules would not unduly burden the judicial system and that they meet the requirements of sections 3(a) and 3(b)(2) of the Order.

Paperwork Reduction Act

These supplementary rules do not contain information collection requirements that the Office of Management and Budget must approve under the Paperwork Reduction Act, 44 U.S.C. 3501 *et seq.*

Supplementary Rules for Fee Collection at Land and Water Conservation

Fund Sites

Under 43 CFR 8365 and 16 U.S.C. 4601–6a(e), the Bureau of Land Management will enforce the following rules on public land at Holter Lake, Holter Dam, Log Gulch, Departure Point, Devil's Elbow, Clark's Bay and Divide Recreation Sites. You must follow these rules:

Sec. 1. Fee Requirements

a. You must pay the posted day use or camping fee.

b. You must display your fee payment receipt at your campsite or on your vehicle.

Sec. 2. Penalties

On public lands, under section 303(a) of the Federal Land Policy and Management Act of 1976 (43 U.S.C. 1733(a)), 43 CFR 8365.1–6 and U.S.C. 4601–6a(e) any person who violates any of these supplementary rules within the boundaries established in the rules may be tried before a United States Magistrate and fined no more than $100. Such violations may also be subject to the enhanced fines provided for by 18 U.S.C. 3571.

Martin C. Ott,

State Director.

[FR Doc. 04–20756 Filed 9–14–04; 8:45 am]

BILLING CODE 4310–$$–P

INTERNATIONAL TRADE COMMISSION

[Investigation No. 731–TA–1088 (Preliminary)]

Polyvinyl Alcohol From Taiwan

AGENCY: International Trade Commission.

ACTION: Institution of antidumping investigation and scheduling of a preliminary phase investigation.

SUMMARY: The Commission hereby gives notice of the institution of an investigation and commencement of preliminary phase antidumping investigation No. 731–TA–1088 (Preliminary) under section 733(a) of the Tariff Act of 1930 (19 U.S.C. 1673b(a)) (the Act) to determine whether there is a reasonable indication that an industry in the United States is materially injured or threatened with material injury, or the establishment of an industry in the United States is materially retarded, by reason of imports from Taiwan of polyvinyl alcohol, provided for in subheading 3905.30.00 of the Harmonized Tariff Schedule of the United States, that are alleged to be sold in the United States at less than fair value. Unless the Department of Commerce extends the time for initiation pursuant to section 732(c)(1)(B) of the Act (19 U.S.C. 1673a(c)(1)(B)), the Commission must reach a preliminary determination in antidumping investigations in 45 days, or in this case by October 22, 2004. The Commission's views are due at Commerce within five business days thereafter, or by October 29, 2004.

For further information concerning the conduct of this investigation and rules of general application, consult the Commission's Rules of Practice and Procedure, part 201, subparts A through E (19 CFR part 201), and part 207, subparts A and B (19 CFR part 207).

DATES: Effective September 7, 2004.

FOR FURTHER INFORMATION CONTACT: Megan Spellacy (202–205–3190), Office of Investigations, U.S. International Trade Commission, 500 E Street SW., Washington, DC 20436. Hearing-impaired persons can obtain information on this matter by contacting the Commission's TDD terminal on 202–205–1810. Persons with mobility impairments who will need special assistance in gaining access to the Commission should contact the Office of the Secretary at 202–205–2000. General information concerning the Commission may also be obtained by accessing its Internet server (*http://www.usitc.gov*). The public record for this investigation may be viewed on the Commission's electronic docket (EDIS) at *http://edis.usitc.gov.*

SUPPLEMENTARY INFORMATION:

Background. This investigation is being instituted in response to a petition filed on September 7, 2004, by Celanese Chemicals, Ltd., Dallas, TX.

Participation in the investigation and public service list. Persons (other than petitioners) wishing to participate in the investigation as parties must file an entry of appearance with the Secretary to the Commission, as provided in sections 201.11 and 207.10 of the Commission's rules, not later than seven days after publication of this notice in the **Federal Register**. Industrial users and (if the merchandise under investigation is sold at the retail level) representative consumer organizations have the right to appear as parties in Commission antidumping investigations. The Secretary will prepare a public service list containing the names and addresses of all persons, or their representatives, who are parties to this investigation upon the expiration of the period for filing entries of appearance.

Limited disclosure of business proprietary information (BPI) under an administrative protective order (APO) and BPI service list. Pursuant to section 207.7(a) of the Commission's rules, the Secretary will make BPI gathered in this investigation available to authorized applicants representing interested parties (as defined in 19 U.S.C. 1677(9)) who are parties to the investigation under the APO issued in the investigation, provided that the application is made not later than seven days after the publication of this notice in the **Federal Register**. A separate service list will be maintained by the Secretary for those parties authorized to receive BPI under the APO.

Conference. The Commission's Director of Operations has scheduled a conference in connection with this investigation for 9:30 a.m. on September 28, 2004, at the U.S. International Trade Commission Building, 500 E Street SW., Washington, DC. Parties wishing to participate in the conference should contact Megan Spellacy (202–205–3190) not later than September 23, 2004, to arrange for their appearance. Parties in support of the imposition of antidumping duties in this investigation and parties in opposition to the imposition of such duties will each be collectively allocated one hour within which to make an oral presentation at the conference. A nonparty who has testimony that may aid the Commission's deliberations may request permission to present a short statement at the conference.

Written submissions. As provided in sections 201.8 and 207.15 of the Commission's rules, any person may submit to the Commission on or before October 1, 2004, a written brief containing information and arguments pertinent to the subject matter of the investigation. Parties may file written testimony in connection with their presentation at the conference no later than three days before the conference. If briefs or written testimony contain BPI, they must conform with the requirements of sections 201.6, 207.3, and 207.7 of the Commission's rules. The Commission's rules do not authorize filing of submissions with the Secretary by facsimile or electronic means, except to the extent permitted by section 201.8 of the Commission's rules, as amended, 67 FR 68036 (November 8, 2002).

In accordance with sections 201.16(c) and 207.3 of the rules, each document filed by a party to the investigation must be served on all other parties to the investigation (as identified by either the public or BPI service list), and a certificate of service must be timely filed. The Secretary will not accept a document for filing without a certificate of service.

Authority: This investigation is being conducted under authority of title VII of the Tariff Act of 1930; this notice is published pursuant to section 207.12 of the Commission's rules.

By order of the Commission.

Issued: September 9, 2004.

Marilyn R. Abbott,

Secretary to the Commission.

[FR Doc. 04–20712 Filed 9–14–04; 8:45 am]

BILLING CODE 7020–02–P

DEPARTMENT OF LABOR

Employment Standards Administration

Proposed Collection; Comment Request

ACTION: Notice.

SUMMARY: The Department of Labor, as part of its continuing effort to reduce paperwork and respondent burden, conducts a preclearance consultation program to provide the general public and Federal agencies with an opportunity to comment on proposed and/or continuing collections of information in accordance with the Paperwork Reduction Act of 1995 (PRA95) (44 U.S.C. 3506(c)(2)(A)). This program helps to ensure that requested data can be provided in the desired

format, reporting burden (time and financial resources) is minimized, collection instruments are clearly understood, and the impact of collection requirements on respondents can be properly assessed. Currently, the Employment Standards Administration is soliciting comments concerning the proposed collection: Request for Information on Earnings, Dual Benefits, Dependents and Third Party Settlements (CA–1032). A copy of the proposed information collection request can be obtained by contacting the office listed below in the addresses section of this Notice.

DATES: Written comments must be submitted to the office listed in the addresses section below on or before November 15, 2004.

ADDRESSES: Ms. Hazel M. Bell, U.S. Department of Labor, 200 Constitution Ave., NW., Room S–3201, Washington, D.C. 20210, telephone (202) 693–0418, fax (202) 693–1451, E-mail *bell.hazel@dol.gov.* Please use only one method of transmission for comments (mail, fax, or E-mail).

SUPPLEMENTARY INFORMATION:

I. Background

The collection of this information is necessary under provisions of the Federal Employees' Compensation Act (FECA) which states: (1) Compensation must be adjusted to reflect a claimant's earnings while in receipt of benefits (5 U.S.C. 8106); (2) compensation is payable at the augmented rate of 75 percent only if the claimant has one or more dependents as defined by the FECA (5 U.S.C. 8110); (3) compensation may not be paid concurrently with certain benefits from other Federal Agencies, such as the Office of Personnel Management, Social Security, and the Veterans Administration (5 U.S.C. 8116); (4) compensation must be adjusted to reflect any settlement from a third party responsible for the injury for which the claimant is being paid compensation (5 U.S.C. 8132); (5) an individual convicted of any violation related to fraud in the application for, or receipt of, any compensation benefit, forfeits (as of the date of such conviction) any entitlement to such benefits, for any injury occurring on or before the date of conviction (5 U.S.C. 8148(a)); and, (6) no Federal compensation benefit can be paid to any individual for any period during which such individual is incarcerated for any felony offense (5 U.S.C. 8148(b)(1)). The information collected through Form CA–1032 is used to ensure that compensation being paid on the periodic roll is correct. This information collection is currently approved for use through February 28, 2005.

II. Review Focus

The Department of Labor is particularly interested in comments which:

- Evaluate whether the proposed collection of information is necessary for the proper performance of the functions of the agency, including whether the information will have practical utility;
- Evaluate the accuracy of the agency's estimate of the burden of the proposed collection of information, including the validity of the methodology and assumptions used;
- Enhance the quality, utility and clarity of the information to be collected; and
- Minimize the burden of the collection of information on those who are to respond, including through the use of appropriate automated, electronic, mechanical, or other technological collection techniques or other forms of information technology, *e.g.*, permitting electronic submissions of responses.

III. Current Actions

The Department of Labor seeks the extension of approval of this information collection in order to ensure that compensation being paid on the periodic roll is correct.

Type of Review: Extension.

Agency: Employment Standards Administration.

Title: Request for Information on Earnings, Dual Benefits, Dependents, and Third Party Settlements.

OMB Number: 1215–0151.

Agency Number: CA–1032.

Affected Public: Individuals or households.

Total Respondents: 50,000.

Total Annual Responses: 50,000.

Average Time per Response: 20 minutes.

Estimated Total Burden Hours: 16,667.

Frequency: Annually.

Total Burden Cost (capital/startup): $0.

Total Burden Cost (operating/maintenance): $20,000.

Comments submitted in response to this notice will be summarized and/or included in the request for Office of Management and Budget approval of the information collection request; they will also become a matter of public record.

Dated: September 9, 2004.

Bruce Bohanon,

Chief, Branch of Management Review and Internal Control, Division of Financial Management, Office of Management, Administration and Planning, Employment Standards Administration.

[FR Doc. 04–20711 Filed 9–14–04; 8:45 am]

BILLING CODE 4510–CH–P

THE NATIONAL FOUNDATION ON THE ARTS AND HUMANITIES

Institute of Museum and Library Services; Proposed Collection, Comment Request, Program Evaluation of an IMLS Workshop To Foster Discussion of Collaborative Activities Among Libraries, Museums, and K–12 Education

ACTION: Notice, request for comments.

SUMMARY: The Institute of Museum and Library Services, as part of its continuing effort to reduce paperwork and respondent burden, invites the general public and federal agencies to comment on proposed and/or continuing collections of information in accordance with the Paperwork Reduction Act of 1995 (PRA95) (44 U.S.C. 3508(2)(A)). This pre-clearance comment opportunity helps to ensure that: Requested data can be provided in the desired format, reporting burden (time and financial resources) is minimized, collection instruments are clearly understood, and the impact of collection requirements on respondents can be properly assessed. The Institute of Museum and Library Services is currently soliciting comments concerning its planned evaluation of a workshop to foster discussion of strengthening K–12 education through collaborations among museums, libraries, and K–12 education.

A copy of the proposed information collection request can be obtained by contacting the individual listed below in the addressee section of this notice.

DATES: Written comments must be submitted to the office listed in the addressee section below on or before November 15, 2004.

IMLS is particularly interested in comments that help the agency to:

- Evaluate whether the proposed collection of information is necessary for the proper performance of the functions of the agency, including whether the information will have practical utility;
- Evaluate the accuracy of the agency's estimate of the burden of the proposed collection of information

including the validity of the methodology and assumptions used;

• Enhance the quality, utility and clarity of the information to be collected; and

• Minimize the burden of the collection of information on those who are to respond, including through the use of appropriate automate electronic, mechanical, or other technological collection techniques or other forms of information technology, *e.g.,* permitting electronic submissions of responses.

ADDRESSES: Send comments to: Karen Motylewski, Research Officer, Institute of Museum and Library Services, 1100 Pennsylvania Ave., NW., Room 223, Washington, DC 20506. Ms. Motylewski can be reached on telephone: 202–606–5551; fax: 202–606–0395; or by e-mail at *kmotylewski@imls.gov.*

SUPPLEMENTARY INFORMATION:

I. Background

The Institute of Museum and Library Services is charged with promoting the improvement of library and museum services for the benefit of the public. Through grantmaking and leadership activities, IMLS seeks to assure that libraries and museums are able to play an active role in cultivating an educated and engaged citizenry. IMLS builds the capacity of libraries and museums by encouraging the highest standards in management, public service, and education; leadership in the use of technology; strategic planning for results, and partnerships to create new networks that support lifelong learning and the effective management of assets.

According to its strategic plan, IMLS is dedicated to creating and sustaining a nation of learners by helping libraries and museums service their communities. IMLS believes that libraries and museums are key resources for education in the United States and promotes the vision of a learning society in which learning is seen as a community-wide responsibility supported by both formal and informal educational entities.

II. Current Actions

Under its convening authority IMLS brought together 60 professionals from the fields of museum, library, and K–12 education on August 30–31, 2004, to explore the current status of knowledge about the learning outcomes, impact, and potential implications of formal collaboration among organizations and institutions in these fields. IMLS's purpose was to increase cross-disciplinary information sharing for the purposes of strengthening learning in the K–12 years and building collaborations to support formal K–12 education. In accordance with the President's Management Agenda, the Government Performance and Results Act of 1993, and the Office of Management and Budget program assessment initiatives, IMLS wishes to measure the extent to which this meeting met IMLS's goals.

Agency: Institute of Museum and Library Services.

Title: Program evaluation of a workshop to foster discussion of strengthening learning through collaborations among libraries, museums, and K–12 education.

OMB Number: n/a.

Agency Number: 3137.

Frequency: One time.

Affected Public: Museums, libraries, K–12 education outlets.

Number of Respondents: 60.

Estimated Time Per Respondent: 15 minutes.

Total Burden Hours: 4.

Total Annualized Capital/Startup Costs: 0.

Total Annual Costs: 0.

FOR FURTHER INFORMATION CONTACT: Karen Motylewski, Research Officer, Office of Research and Technology, Institute of Museum and Library Services, 1100 Pennsylvania Avenue, NW., Washington, DC 20506, e-mail *kmotylewski@imls.gov,* telephone (202) 606–5551.

Dated: September 9, 2004.

Rebecca Danvers,

Director, Office of Research and Technology.

[FR Doc. 04–20747 Filed 9–14–04; 8:45 am]

BILLING CODE 7036–01–M

NATIONAL FOUNDATION ON THE ARTS AND THE HUMANITIES

National Endowment for the Arts; Arts Advisory Panel

Pursuant to section 10(a)(2) of the Federal Advisory Committee Act (Pub. L. 92–463), as amended, notice is hereby given that two teleconference meetings of the Arts Advisory Panel to the National Council on the Arts will be held at the Nancy Hanks Center, 1100 Pennsylvania Avenue, NW., Washington, DC 20506 as follows:

Music: September 27, 2004, Room 703 (NEA Jazz Masters Touring). This meeting, from 1 p.m. to 1:30 p.m., will be closed.

Arts Education: October 5, 2004, Room 703 (Arts Teacher Institutes). This meeting, from 3 p.m. to 4 p.m., will be closed.

The meetings are for the purpose of Panel review, discussion, evaluation, and recommendation on applications for financial assistance under the National Foundation on the Arts and the Humanities Act of 1965, as amended, including information given in confidence to the agency by grant applicants. In accordance with the determination of the Chairman of April 14, 2004, these sessions will be closed to the public pursuant to subsection (c)(6) of 5 U.S.C. 552b.

Further information with reference to these meetings can be obtained from Ms. Kathy Plowitz-Worden, Office of Guidelines & Panel Operations, National Endowment for the Arts, Washington, DC 20506, or call (202) 682–5691.

Dated: September 8, 2004.

Kathy Plowitz-Worden,

Panel Coordinator, Panel Operations, National Endowment for the Arts.

[FR Doc. 04–20713 Filed 9–14–04; 8:45 am]

BILLING CODE 7537–01–P

NEIGHBORHOOD REINVESTMENT CORPORATION

Regular Board of Directors Meeting

TIME AND DATE: 2 p.m., Monday, September 20, 2004.

PLACE: Neighborhood Reinvestment Corporation, 1325 G Street NW., Suite 800, Boardroom, Washington, DC 20005.

STATUS: Open.

FOR FURTHER INFORMATION CONTACT: Jeffrey T. Bryson, General Counsel/Secretary, 202–220–2372; *jbryson@nw.org.*

AGENDA:

I. Call to Order

II. Approval of Minutes:

June 25, 2004 Annual Meeting

III. Budget Committee Meetings

IV. Treasurer's Report

V. CEO Report

a. COO Search

b. PART Summary

c. Success Measures Update

d. Housing Choice Voucher Program

e. Activities & Output Measures

VI. Fundraising Policies Update

VII. DBA Update

a. DBA Resolution

b. DBA Start-Up Outline

VIII. Adjournment

Jeffrey T. Bryson

General Counsel/Secretary.

[FR Doc. 04–20860 Filed 9–13–04; 10:07 am]

BILLING CODE 7570–01–M

NUCLEAR REGULATORY COMMISSION

Sunshine Act Notice

DATES: Weeks of September 13, 20, 27, October 4, 11, 18, 2004.

PLACE: Commissioners' Conference Room, 11555 Rockville Pike, Rockville, Maryland.

STATUS: Public and Closed.

MATTERS TO BE CONSIDERED:

Week of September 13, 2004

Tuesday, September 14, 2004
9:30 a.m. Discussion of Security Issues (Closed—Ex. 1)

Week of September 20, 2004—Tentative

There are no meetings scheduled for the Week of September 20, 2004.

Week of September 27, 2004—Tentative

There are no meetings scheduled for the Week of September 27, 2004.

Week of October 4, 2004—Tentative

Thursday, October 7, 2004
10:30 a.m. Discussion of Security Issues (Closed—Ex.1)
1 p.m. Discussion of Security Issues (Closed—Ex.1)

Week of October 11, 2004—Tentative

Wednesday, October 13, 2004
9:30 a.m. Briefing on Decommissioning Activities and Status (Public Meeting) (Contact: Claudia Craig, 301–415–7276)
This meeting will be webcast live at the Web address—*http://www.nrc.gov.*
1:30 p.m. Discussion of Intragovernmental Issues (Closed—Ex. 1 & 9)

Week of October 18, 2004—Tentative

There are no meetings scheduled for the Week of October 18, 2004.

*The schedule for Commission meetings is subject to change on short notice. To verify the status of meetings call (recording)—(301) 415–1292. Contact person for more information: Dave Gamberoni, (301) 415–1651.

* * * * *

The NRC Commission Meeting Schedule can be found on the Internet at: *http://www.nrc.gov/what-we-do/policy-making/schedule.html.*

* * * * *

The NRC provides reasonable accommodation to individuals with disabilities where appropriate. If you need a reasonable accommodation to participate in these public meetings, or need this meeting notice or the transcript of other information from the public meetings in another format (*e.g.*, braille, large print), please notify the NRC's Disability Program Coordinator, August Spector, at 301–415–7080, TDD: 301–415–2100, or by e-mail at *aks@nrc.gov.* Determinations on requests for reasonable accommodation will be made on a case-by-case basis.

* * * * *

This notice is distributed by mail to several hundred subcribers; if you no longer wish to receive it, or would like to be added to the distribution, please contact the Office of the Secretary, Washington, DC 20555 (301–415–1969). In addition, distribution of this meeting notice over the Internet system is available. If you are interested in receiving this Commission meeting schedule electronically, please send an electronic message to *dkw@nrc.gov.*

Dated: September 9, 2004.

R. Michelle Schroll,

Office of the Secretary.

[FR Doc. 04–20857 Filed 9–13–04; 10:07 am]

BILLING CODE 7590–01–M

PENSION BENEFIT GUARANTY CORPORATION

Required Interest Rate Assumption for Determining Variable-Rate Premium; Interest Assumptions for Multiemployer Plan Valuations Following Mass Withdrawal

AGENCY: Pension Benefit Guaranty Corporation.

ACTION: Notice of interest rates and assumptions.

SUMMARY: This notice informs the public of the interest rates and assumptions to be used under certain Pension Benefit Guaranty Corporation regulations. These rates and assumptions are published elsewhere (or can be derived from rates published elsewhere), but are collected and published in this notice for the convenience of the public. Interest rates are also published on the PBGC's Web site (*http://www.pbgc.gov*).

DATES: The required interest rate for determining the variable-rate premium under part 4006 applies to premium payment years beginning in September 2004. The interest assumptions for performing multiemployer plan valuations following mass withdrawal under part 4281 apply to valuation dates occurring in October 2004.

FOR FURTHER INFORMATION CONTACT: Harold J. Ashner, Assistant General Counsel, Office of the General Counsel, Pension Benefit Guaranty Corporation, 1200 K Street, NW., Washington, DC 20005, 202–326–4024. (TTY/TDD users may call the Federal relay service toll-free at 1–800–877–8339 and ask to be connected to 202–326–4024.)

SUPPLEMENTARY INFORMATION:

Variable-Rate Premiums

Section 4006(a)(3)(E)(iii)(II) of the Employee Retirement Income Security Act of 1974 (ERISA) and Section 4006.4(b)(1) of the PBGC's regulation on Premium Rates (29 CFR part 4006) prescribe use of an assumed interest rate (the ''required interest rate'') in determining a single-employer plan's variable-rate premium. Pursuant to the Pension Funding Equity Act of 2004, for premium payment years beginning in 2004 or 2005, the required interest rate is the ''applicable percentage'' (currently 85 percent) of the annual rate of interest determined by the Secretary of the Treasury on amounts invested conservatively in long-term investment grade corporate bonds for the month preceding the beginning of the plan year for which premiums are being paid. Thus, the required interest rate to be used in determining variable-rate premiums for premium payment years beginning in September 2004 is 4.95 percent (*i.e.*, 85 percent of the 5.82 percent composite corporate bond rate for August 2004 as determined by the Treasury).

The following table lists the required interest rates to be used in determining variable-rate premiums for premium payment years beginning between October 2003 and September 2004. Note that the required interest rates for premium payment years beginning in October through December 2003 were determined under the Job Creation and Worker Assistance Act of 2002, and that the required interest rates for premium payment years beginning in January through September 2004 were determined under the Pension Funding Equity Act of 2004.

For premium payment years beginning in:	The required interest rate is:
October 2003*	5.14
November 2003*	5.16
December 2003*	5.12
January 2004**	4.94
February 2004**	4.83
March 2004**	4.79
April 2004**	4.62
May 2004**	4.98
June 2004**	5.26
July 2004**	5.25
August 2004**	5.10
September 2004**	4.95

* The required interest rates for premium payment years beginning in October through December 2003 were determined under the Job Creation and Worker Assistance Act of 2002.

** The required interest rates for premium payment years beginning in January through September 2004 were determined under the Pension Funding Equity Act of 2004.

Multiemployer Plan Valuations Following Mass Withdrawal

The PBGC's regulation on Duties of Plan Sponsor Following Mass Withdrawal (29 CFR part 4281) prescribes the use of interest assumptions under the PBGC's regulation on Allocation of Assets in Single-Employer Plans (29 CFR part 4044). The interest assumptions applicable to valuation dates in October 2004 under part 4044 are contained in an amendment to part 4044 published elsewhere in today's **Federal Register**. Tables showing the assumptions applicable to prior periods are codified in appendix B to 29 CFR part 4044.

Issued in Washington, DC, on this 9th day of September 2004.

Joseph H. Grant,

Deputy Executive Director and Chief Operating Officer, Pension Benefit Guaranty Corporation.

[FR Doc. 04–20738 Filed 9–14–04; 8:45 am]

BILLING CODE 7708–01–P

SMALL BUSINESS ADMINISTRATION

Audit and Financial Management Advisory (AFMAC); Committee Meeting

The U.S. Small Business Administration's Audit and Financial Management Advisory Committee (AFMAC) will meet on September 30, 2004 at 9 a.m in the Chief Finanacial Officer's conference room. This will be the first meeting of the committee which was chartered in accordance with the Federal Advisory Committee Act. The AFMAC was established by the Administrator of the SBA to provide recommendation and advice regarding the Agency's financial management including the financial reporting process, systems of internal controls, audit process and process for monitoring compliance with relevant laws and regulations.

Anyone wishing to attend must contact Thomas Dumaresq in writing or by fax. Thomas Dumaresq, Chief Financial Officer, 409 3rd Street SW., Washington DC 20416, phone (202) 205–6506, fax: (202) 205–6869, e-mail: *thomas.dumaresq@sba.gov*

Dated: September 9, 2004.

Carmen-Rose Torres,

Director, Office of the Chief Financial Officer, Office of Analysis, Planning and Accountability.

[FR Doc. 04–20749 Filed 9–14–04; 8:45 am]

BILLING CODE 8025–01–P

SOCIAL SECURITY ADMINISTRATION

Senior Executive Service Performance Review Board Membership

AGENCY: Social Security Administration.

ACTION: Notice of Senior Executive Service Performance Review Board Membership.

Title 5, U.S. Code, section 4314(c)(4) of the Civil Service Reform Act of 1978, Public Law 95–454, requires that the appointment of Performance Review Board members be published in the **Federal Register**.

The following persons will serve on the Performance Review Board which oversees the evaluation of performance appraisals of Senior Executive Service members of the Social Security Administration.

Nicholas M. Blatchford,
Michael G. Gallagher *,
Rogelio Gomez *,
Myrtle S. Habersham *,
Terris A. King,
Nancy A. McCullough,
Carolyn L. Simmons,
Felicita Sola-Carter,
Thomas J. Tobin *,
Paul N. Van de Water,
Manuel Vaz,
Alice H. Wade,
Charles M. Wood.

Dated: September 3, 2004.

Reginald F. Wells,

Deputy Commissioner for Human Resources.

[FR Doc. 04–20708 Filed 9–14–04; 8:45 am]

BILLING CODE 4191–02–P

DEPARTMENT OF TRANSPORTATION

Office of the Secretary

Aviation Proceedings, Agreements Filed the Week Ending September 3, 2004

The following Agreements were filed with the Department of Transportation under the provisions of 49 U.S.C. 412 and 414. Answers may be filed within 21 days after the filing of the application.

Docket Number: OST–2004–19025.
Date Filed: August 30, 2004.
Parties: Members of the International Air Transport Association.
Subject:
PTC COMP 1180 dated 31 August 2004.
Mail Vote 406—Resolution 010x.
Special Passenger Amending Resolution.
Intended effective date: 17 September 2004.

* New Member.

Docket Number: OST–2004–19035.
Date Filed: August 31, 2004.
Parties: Members of the International Air Transport Association.
Subject:
PAC/Reso/430 dated 23 July 2004.
Mail Vote Number A 117 Weekly Remittance in Korea r1.
Intended effective date: 1 January 2005.

Docket Number: OST–2004–19036.
Date Filed: August 31, 2004.
Parties: Members of the International Air Transport Association.
Subject:
PAC/Reso/431 dated 23 July 2004.
Mail Vote Number A 118 Implementation of Resolution 814 in Serbia and Montenegro r1.
Intended effective date: 1 January 2005.

Docket Number: OST–2004–19037.
Date Filed: August 31, 2004.
Parties: Members of the International Air Transport Association.
Subject:
PAC/Reso/432 dated 4 August 2004.
Mail Vote Number A 119 Adoption of Local Criteria for Slovenia under Resolution 818 r1.
Intended effective date: 1 January 2005.

Docket Number: OST–2004–19056.
Date Filed: September 2, 2004.
Parties: Members of the International Air Transport Association.
Subject:
32nd IATA CAC held in Singapore on 10 March 2004.
Mail Vote CAC/Mail Vote/002/2004 dated 3 August 2004.
Finally Adopted Resolutions 801r/801re/805zz/851/853.
Intended effective date: 1 November 2004.

Maria Gulczewski,

Supervisory Dockets Officer, Alternate Federal Register Liaison.

[FR Doc. 04–20799 Filed 9–14–04; 8:45 am]

BILLING CODE 4910–62–P 2

DEPARTMENT OF TRANSPORTATION

Office of the Secretary

[Docket OST–2004–18638]

Application of Chautauqua Airlines, Inc. for Certificate Authority

AGENCY: Department of Transportation.

ACTION: Notice of Order to Show Cause (Order 2004–9–9).

SUMMARY: The Department of Transportation is directing all interested persons to show cause why it should not issue an order finding Chautauqua

Airlines, Inc., fit, willing, and able, and awarding it a certificate of public convenience and necessity to engage in interstate scheduled air transportation of persons, property and mail.

DATES: Persons wishing to file objections should do so no later than September 15, 2004.

ADDRESSES: Objections and answers to objections should be filed in Docket OST–2004–18639 and addressed to Docket Operations, (M–30, Room PL–401), U.S. Department of Transportation, 400 Seventh Street, SW., Washington, DC 20590, and should be served upon the parties listed in Attachment A to the order.

FOR FURTHER INFORMATION CONTACT: Vanessa R. Wilkins, Air Carrier Fitness Division (X–56, Room 6401), U.S. Department of Transportation, 400 Seventh Street, SW., Washington, DC 20590, (202) 366–9721.

Dated: September 8, 2004.

Patricia L. Thomas,

Chief, Air Carrier Fitness Division.

[FR Doc. 04–20716 Filed 9–14–04; 8:45 am]

BILLING CODE 4910–62–P

DEPARTMENT OF TRANSPORTATION

Federal Aviation Administration

Notice of Intent To Rule on Application 04–06–C–00–PSC to Impose and Use the Revenue From a Passenger Facility Charge (PFC) at Tri-Cities Airport, Submitted by the Port of Pasco, Tri-Cities Airport, Pasco, WA

AGENCY: Federal Aviation Administration (FAA), DOT.

ACTION: Notice of intent to rule on application.

SUMMARY: The FAA proposes to rule and invites public comment on the application to impose and use PFC revenue at Tri-Cities Airport under the provisions of 49 U.S.C. 40117 and Part 158 of the Federal Aviation Regulations (14 CFR part 158).

DATES: Comments must be received on or before October 15, 2004.

ADDRESSES: Comments on this application may be mailed or delivered in triplicate to the FAA at the following address: Mr. J. Wade Bryant, Manager; Seattle Airports District Office, SEA–ADO; Federal Aviation Administration; 1601 Lind Avenue SW., Suite 250, Renton, Washington 98055–4056.

In addition, one copy of any comments submitted to the FAA must be mailed or delivered to Mr. James Morasch, A.A.E, Director of Airports, at the following address: 3601 North 20th Avenue, Pasco, Washington 99301.

Air Carriers and foreign air carriers may submit copies of written comments previously provided to Tri-Cities Airport, under section 158.23 of Part 158.

FOR FURTHER INFORMATION CONTACT: Ms. Suzanne Lee-Pang, (425) 227–2654, Seattle Airports District Office, SEA–ADO; Federal Aviation Administration; 1601 Lind Avenue SW., Suite 250, Renton, Washington 98055–4056. The application may be reviewed in person at this same location.

SUPPLEMENTARY INFORMATION: The FAA proposes to rule and invites public comment on the application 04–06–C–00–PSC to impose and use PFC revenue at Tri-Cities Airport, under the provisions of 49 U.S.C. 40117 and Part 158 of the Federal Aviation Regulations (14 CFR Part 158).

On September 9, 2004, the FAA determined that the application to impose and use the revenue from a PFC submitted by the Port of Pasco, Tri-Cities Airport, Pasco, Washington was substantially complete within the requirements of § 158.25 of Part 158. The FAA will approve or disapprove the application, in whole or in part, no later than December 11, 2004.

The following is a brief overview of the application.

Level of the proposed PFC: $4.50.

Proposed charge effective date: June 1, 2005.

Proposed charge expiration date: September 1, 2010.

Total requested for use approval: $4,599,230.

Brief description of proposed project: Mobile ADA Lift; Terminal Building Passenger Ticket Lobby Expansion; Terminal Apron Reconstruction and Snow and Ice Removal Equipment.

Class or classes of air carrier, which the public agency has requested not be required to collect PFC's: None.

Any person may inspect the application in person at the FAA office listed above under **FOR FURTHER INFORMATION CONTACT** and at the FAA Regional Airports Office located at: Federal Aviation Administration, Northwest Mountain Region, Airports Division, ANM–600, 1601 Lind Avenue SW., Suite 315, Renton, WA 98055–4056.

In addition, any person may, upon request, inspect the application, notice and other documents germane to the application in person at the Tri-Cities Airport.

Issued in Renton, Washington on September 9, 2004.

David A. Field,

Manager, Planning, Programming and Capacity Branch, Northwest Mountain Region.

[FR Doc. 04–20801 Filed 8–14–04; 8:45 am]

BILLING CODE 4910–13–M

DEPARTMENT OF TRANSPORTATION

Federal Highway Administration

Environmental Assessment; Finding of No Significant Impact (FONSI): George Washington Memorial Parkway, Arlington, VA and District of Columbia

AGENCY: Federal Highway Administration (FHWA), Eastern Federal Lands Highway Division, DOT.

SUMMARY: The FHWA, in cooperation with the National Park Service (NPS), is issuing a Finding of No Significant Impact for the replacement of an existing bridge and related vehicular and pedestrian/bicycle safety improvements on the George Washington Memorial Parkway located in Arlington County, VA and the District of Columbia.

FOR FURTHER INFORMATION: Jack Van Dop, Technical Specialist, Federal Highway Administration, 21400 Ridgetop Circle, Sterling, VA 20166, Telephone: (703) 404–6282, e-mail: *jack.j.vandop@fhwa.dot.gov.*

SUPPLEMENTARY INFORMATION: The FHWA, in cooperation with the NPS, is issuing a FONSI for the preferred alternative as identified in the Environmental Assessment (EA) for Roadway and Trail Safety Improvements for the George Washington Memorial Parkway. This project is located in Arlington County, Virginia and Washington, DC and includes replacement of the existing Parkway Boundary Channel Bridge (also known as the Humpback Bridge), modifications to the Parkway's vehicular entrance to Columbia Island, and improvements to the existing trail network. The purpose of the EA is to record the selection of a preferred alternative and its potential impacts on the environment. The determination as to whether the selected alternative (undertaking) will have (or not have—FONSI) a significant impact on the environment has been made pursuant to the Council on Environmental Quality's regulations (40 CFR 1500) for implementing the National Environmental Policy Act.

The FONSI can be viewed at *http://www.efl.fhwa.dot.gov/planning/nepa/* and *http://www.nps.gov/gwmp/.*

Authority: 23 U.S.C. 315; 49 CFR 1.48.

Jack Van Dop,

Technical Specialist.

[FR Doc. 04–20777 Filed 9–14–04; 8:45 am]

BILLING CODE 4910–22–P

DEPARTMENT OF TRANSPORTATION

Federal Railroad Administration

Petition for Waiver of Compliance

In accordance with Part 211 of Title 49 Code of Federal Regulations (CFR), notice is hereby given that the Federal Railroad Administration (FRA) received a request for a waiver of compliance with certain requirements of its safety standards. The individual petition is described below, including the party seeking relief, the regulatory provisions involved, the nature of the relief being requested, and the petitioner's arguments in favor of relief.

Wabtec Corporation

[Waiver Petition Docket Number FRA–2004–18895]

The Wabtec Corporation (Wabtec) seeks a waiver of compliance from certain provisions of 49 CFR Part 232, Brake System Safety Standards for Freight and Other Non-Passenger Trains and Equipment. Specifically, § 232.409(d)—Inspection and Testing of end-of-train devices, which requires the telemetry equipment to be tested for accuracy and calibrated if necessary at least every 368 days. It also requires that the date and location of the last calibration or test as well as the name of the person performing the calibration or test, be legibly displayed on a weather-resistant sticker or other marking device affixed to the outside of both the front and the rear unit.

This waiver will cover all Wabtec TrainLink II Head of Train (HTD's) and End of Train devices (EOT's) that were produced since March 4, 2002, and all existing TrainLink units that are upgraded with the new WRE digitally synthesized radio. If the waiver is approved, Wabtec and associated service centers will attach a sticker on all new and upgraded units identifying they are equipped with the new WRE digital radio and are covered by the waiver. Wabtec has concluded that with the advanced technology, there is no need to annually test and calibrate units built or upgraded with the new synthesized radio.

Previous generation radio designs used manual tuning coils and potentiometers that were subject to drift due to vibration and temperature shifts. These older designs required manual adjustments to assure that the radio was operating on the proper frequencies. The new WRE TrainLink II synthesized digital radio provides a continuous, fully automatic self-calibrating feature, along with advanced diagnostics to assure accuracy and dependability in radio transmission. As a result, there is no manual calibration or adjustment in this new radio design. The transceiver is designed specifically for the harsh railroad environment and incorporates phase lock loop circuitry, along with temperature and voltage controlled crystal oscillators to maintain spectral (signal) purity. This automatic algorithm works by optimizing the VCO control parameters to achieve minimum phase noise. It automatically calibrates the power amplifier (PA) and power amplifier driver (RF) bias current every time the transmitter is powered. This automatic calibration feature is the heart of maintaining the radio's performance integrity. Should the radio experience a component failure, the auto-cal routine will cycle continuously, effectively shut down the radio, and provide the appropriate ''No Comm'' display in the cab of the locomotive. Failure in the micro/power supply areas will also result in an inoperable radio, and the same ''No Comm'' message will be received in the locomotive cab.

Wabtec also concludes that since the synthesized radio requires no manual adjustments, and if the waiver is approved no annual testing will be required, there is no need for the record keeping requirements (*i.e.* Sticker with date location, and name of person performing the test).

Wabtec has been producing the synthesized digital radio for over 2 years. Currently, there are over 25,000 TrainLink II systems in operation worldwide, including approximately 20,000 on U.S. railroads. Wabtec states that these units have provided reliable service since their introduction.

Interested parties are invited to participate in these proceedings by submitting written views, data, or comments. FRA does not anticipate scheduling a public hearing in connection with these proceedings since the facts do not appear to warrant a hearing. If any interested party desires an opportunity for oral comment, they should notify FRA, in writing, before the end of the comment period and specify the basis for their request.

All communications concerning these proceedings should identify the appropriate docket number (*e.g.*, Waiver Petition Docket Number FRA–2004–18895) and must be submitted to the Docket Clerk, DOT Docket Management Facility, Room PL–401 (Plaza Level), 400 7th Street, SW., Washington, DC 20590. Communications received within 30 days of the date of this notice will be considered by FRA before final action is taken. Comments received after that date will be considered as far as practicable. All written communications concerning these proceedings are available for examination during regular business hours (9 a.m.–5 p.m.) at the above facility. All documents in the public docket are also available for inspection and copying on the Internet at the docket facility's Web site at *http://dms.dot.gov.*

Anyone is able to search the electronic form of all comments received into any of our dockets by the name of the individual submitting the comment (or signing the comment, if submitted on behalf of an association, business, labor union, etc.). You may review DOT's complete Privacy Act Statement in the **Federal Register** published on April 11, 2000 (Volume 65, Number 70; Pages 19477–78). The Statement may also be found at *http://dms.dot.gov.*

Issued in Washington, DC on September 7, 2004.

Grady C. Cothen, Jr.,

Acting Associate Administrator for Safety.

[FR Doc. 04–20718 Filed 9–14–04; 8:45 am]

BILLING CODE 4910–06–P

DEPARTMENT OF TRANSPORTATION

Surface Transportation Board

[STB Finance Docket No. 34539]

Golden Isles Terminal Railroad, Inc.—Acquisition and Operation Exemption—CSX Transportation, Inc.

Golden Isles Terminal Railroad, Inc. (GITM), a Class III rail carrier, has filed a verified notice of exemption under 49 CFR 1150.41 to acquire from CSX Transportation, Inc. (CSXT) and operate approximately 6.45 miles of rail line from approximately milepost ASO 493.3 at or near Staley Avenue, to the end of the track at approximately milepost ASO 499.75, in Savannah, GA,[1] and lease from CSXT the real property comprising the right-of-way underlying the subject line.

GITM certifies that its projected annual revenues as a result of this transaction will not result in the creation of a Class II or Class I rail carrier.

[1] GITM is purchasing from CSXT the track, rails, ties, ballast, culverts and all other non-real property assets that comprise the subject line.

The transaction was scheduled to be consummated on or after August 26, 2004.

If the verified notice contains false or misleading information, the exemption is void *ab initio.* Petitions to revoke the exemption under 49 U.S.C. 10502(d) may be filed at any time. The filing of a petition to revoke will not automatically stay the transaction.

An original and 10 copies of all pleadings, referring to STB Finance Docket No. 34539, must be filed with the Surface Transportation Board, 1925 K Street, NW., Washington, DC 20423–0001. In addition, one copy of each pleading must be served on Rose-Michelle Weinryb, 1300 19th Street, NW., Washington, DC 20036.

Board decisions and notices are available on our Web site at *http://www.stb.dot.gov.*

Decided: September 8, 2004.

By the Board, David M. Konschnik, Director, Office of Proceedings.

Vernon A. Williams,

Secretary.

[FR Doc. 04–20672 Filed 9–14–04; 8:45 am]

BILLING CODE 4915–01–P

DEPARTMENT OF VETERANS AFFAIRS

[OMB Control No. 2900–0041]

Agency Information Collection Activities Under OMB Review

AGENCY: Veterans Benefits Administration, Department of Veterans Affairs.

ACTION: Notice.

SUMMARY: In compliance with the Paperwork Reduction Act (PRA) of 1995 (44 U.S.C. 3501–21), this notice announces that the Veterans Benefits Administration (VBA), Department of Veterans Affairs, has submitted the collection of information abstracted below to the Office of Management and Budget (OMB) for review and comment. The PRA submission describes the nature of the information collection and its expected cost and burden and includes the actual data collection instrument.

DATES: Comments must be submitted on or before October 14, 2004.

FOR FURTHER INFORMATION CONTACT: Denise McLamb, Records Management Service (005E3), Department of Veterans Affairs, 810 Vermont Avenue, NW., or e-mail *denise.mclamb@mail.va.gov*. Please refer to ''OMB Control No. 2900–0041.'' Send comments and recommendations concerning any aspect of the information collection to VA's OMB Desk Officer, OMB Human Resources and Housing Branch, New Executive Office Building, Room 10235, Washington, DC 20503, (202) 395–7316. Please refer to ''OMB Control No. 2900–0041'' in any correspondence.

SUPPLEMENTARY INFORMATION:

Title: Compliance Inspection Report, VA Form 26–1839.

OMB Control Number: 2900–0041.

Type of Review: Extension of a currently approved collection.

Abstract: The form is used by fee compliance inspectors to report acceptability of residential construction and conformity with standards prescribed for new housing proposed as security for loans guaranty. VA uses the information to determine whether completion of all onsite and offsite improvements are completed in accordance with plans and specifications used in the appraisal of the property.

An agency may not conduct or sponsor, and a person is not required to respond to a collection of information unless it displays a currently valid OMB control number. The **Federal Register** Notice with a 60-day comment period soliciting comments on this collection of information was published on June 15, 2004, at page 33468.

Affected Public: Individuals or households.

Estimated Annual Burden: 7,875 hours.

Estimated Average Burden Per Respondent: 15 minutes.

Frequency of Response: On occasion.

Estimated Number of Respondents: 31,500.

Dated: September 2, 2004.

By direction of the Secretary.

Loise Russell, Director, Records Management Service.

[FR Doc. 04–20742 Filed 9–14–04; 8:45 am]

BILLING CODE 8320–01–P

DEPARTMENT OF VETERANS AFFAIRS

[OMB Control No. 2900–0188]

Agency Information Collection Activities Under OMB Review

AGENCY: Veterans Health Administration, Department of Veterans Affairs.

ACTION: Notice.

SUMMARY: In compliance with the Paperwork Reduction Act (PRA) of 1995 (44 U.S.C. 3501–21), this notice announces that the Veterans Health Administration (VHA), Department of Veterans Affairs, has submitted the collection of information abstracted below to the Office of Management and Budget (OMB) for review and comment. The PRA submission describes the nature of the information collection and its expected cost and burden and includes the actual data collection instrument.

DATES: Comments must be submitted on or before October 15, 2004.

FOR FURTHER INFORMATION OR A COPY OF THE SUBMISSION CONTACT: Denise McLamb, Records Management Service (005E3), Department of Veterans Affairs, 810 Vermont Avenue, NW., Washington, DC 20420, (202) 273–8030, fax (202) 273–5981 or e-mail to: *denise.mclamb@mail.va.gov.* Please refer to ''OMB Control No. 2900–0188.''

Send comments and recommendations concerning any aspect of the information collection to VA's OMB Desk Officer, OMB Human Resources and Housing Branch, New Executive Office Building, Room 10235, Washington, DC 20503, (202) 395–7316. Please refer to ''OMB Control No. 2900–0188'' in any correspondence.

SUPPLEMENTARY INFORMATION:

Title:

a. Request to Submit Estimate, Form Letter 10–90.

b. Loan Follow-up Letter, Form Letter 10–426.

c. Veterans Application for Assistance in Acquiring Home Improvement and Structural Alterations, VA Form 10–0103.

d. Application for Adaptive Equipment Motor Vehicle, VA Form 10–1394.

e. Prosthetic Authorization for Items or Services, VA Form 10–2421.

f. Prosthetic Service Card Invoice, VA Form 10–2520.

g. Prescription and Authorization for Eyeglasses, VA Form 10–2914.

OMB Control Number: 2900–0188.

Type of Review: Extension of a currently approved collection.

Abstract: The following forms will be used to determine eligibility, prescribe, authorize prosthetic devices, and obtain follow–up information on loaned prosthetic items, glasses, and adaptation to house and automobile:

a. VA Form Letter 10–90 is used to obtain estimated price for prosthetic devices.

b. Form Letter 10–426 is used to inventory prosthetic devices loaned to eligible veterans. The form letter inventories the loaned items and solicits information from the beneficiary to determine the current status, the need to replace, extend the loan period or terminate the loaned items.

c. VA Form 10–0103 is used to determine eligibility/entitlement and reimbursement of individual claims for home improvement and structural alterations.

d. VA Form 10–1394 is used to determine eligibility/entitlement and reimbursement of individual claims for automotive adaptive equipment.

e. VA Form 10–2421 is used for the direct procurement of new prosthetic appliances and/or services. The form standardizes the direct procurement authorization process, eliminating the need for separate purchase orders, expedites patient treatment and improves the delivery of prosthetic services.

f. VA Form 10–2520 is used by the vendors as an invoice and billing document. The form standardizes repair/treatment invoices for prosthetic services rendered and standardizes the verification of these invoices. The veteran certifies that the repairs were necessary and satisfactory. This form is furnished to vendors upon request.

g. VA Form 10–2914 is used as a combination prescription, authorization and invoice. It allows veterans to purchase their eyeglasses directly. If the form is not used, the provisions of providing eyeglasses to eligible veterans may be delayed.

An agency may not conduct or sponsor, and a person is not required to respond to a collection of information unless it displays a currently valid OMB control number. The **Federal Register** Notice with a 60-day comment period soliciting comments on this collection of information was published on June 8, 2004, at page 32098.

Affected Public: Individuals or households and business or other for profit.

Estimated Total Annual Burden: 48,522 hours.

a. Form Letter 10–90—708.
b. Form Letter 10–426—17.
c. VA Form 10–0103—583.
d. VA Form 10–1394—2,500.
e. VA Form 10–2421—4,667.
f. VA Form 10–2520—47.
g. VA Form 10–2914—40,000.

Estimated Average Burden Per Respondent:

a. Form Letter 10–90—5 minutes.
b. Form Letter 10–426—1 minute.
c. VA Form 10–0103—5 minutes.
d. VA Form 10–1394—15 minutes.
e. VA Form 10–2421—4 minutes.
f. VA Form 10–2520—4 minutes.
g. VA Form 10–2914—4 minutes.

Frequency of Response: On occasion.

Estimated Number of Respondents: 697,200.

a. Form Letter 10–90—8,500.
b. Form Letter 10–426—1,000.
c. VA Form 10–0103—7,000.
d. VA Form 10–1394—10,000.
e. VA Form 10–2421—70,000.
f. VA Form 10–2520—700.
g. VA Form 10–2914—600,000.

Dated: September 1, 2004.
By direction of the Secretary.

Loise Russell,

Director, Records Management Service.

[FR Doc. 04–20743 Filed 9–14–04; 8:45 am]

BILLING CODE 8320–01–P

DEPARTMENT OF VETERANS AFFAIRS

[OMB Control No. 2900–0260]

Agency Information Collection Activities Under OMB Review

AGENCY: Veterans Health Administration, Department of Veterans Affairs.

ACTION: Notice.

SUMMARY: In compliance with the Paperwork Reduction Act (PRA) of 1995 (44 U.S.C. 3501–21), this notice announces that the Veterans Health Administration (VHA), Department of Veterans Affairs, has submitted the collection of information abstracted below to the Office of Management and Budget (OMB) for review and comment. The PRA submission describes the nature of the information collection and its expected cost and burden and includes the actual data collection instrument.

DATES: Comments must be submitted on or before October 15, 2004.

For Further Information or a Copy of the Submission Contact: Denise McLamb, Records Management Service (005E3), Department of Veterans Affairs, 810 Vermont Avenue, NW., Washington, DC 20420, (202) 273–8030, fax (202) 273–5981 or e-mail to: *denise.mclamb@mail.va.gov*. Please refer to ''OMB Control No. 2900–0260.''

Send comments and recommendations concerning any aspect of the information collection to VA's OMB Desk Officer, OMB Human Resources and Housing Branch, New Executive Office Building, Room 10235, Washington, DC 20503, (202) 395–7316. Please refer to ''OMB Control No. 2900–0260'' in any correspondence.

SUPPLEMENTARY INFORMATION:

Title: Request for and Authorization to Release Medical Records or Health Information, VA Form 10–5345.

OMB Control Number: 2900–0260.

Type of Review: Extension of a currently approved collection.

Abstract: VA Form 10–5345 is used to obtain prior written consent from a patient before information concerning treatment for alcoholism or alcohol abuse, drug abuse, sickle cell anemia, or infection with the human immunodeficiency virus (HIV) can be disclosed from his or her medical record. This special consent must indicate the name of the facility permitted to make the disclosure, name of the individual or organization to whom the information is being released, specify the particular records or information to be released, and be under the signature of the veteran and dated. It must reflect the purpose the information is to be used, and include a statement that the consent is subject to revocation and the date, event or condition upon which the consent will expire if not revoked before.

An agency may not conduct or sponsor, and a person is not required to respond to a collection of information unless it displays a currently valid OMB control number. The **Federal Register** Notice with a 60-day comment period soliciting comments on this collection of information was published on June 8, 2004, at page 32096.

Affected Public: Business or other for profit, Individuals or households.

Estimated Total Annual Burden: 16,667 hours.

Estimated Average Burden Per Respondent: 2 minutes.

Frequency of Response: One time.

Estimated Number of Respondents: 500,000.

Dated: September 1, 2004.
By direction of the Secretary.

Loise Russell,

Director, Records Management Service.

[FR Doc. 04–20744 Filed 9–14–04; 8:45 am]

BILLING CODE 8320–01–P

DEPARTMENT OF VETERANS AFFAIRS

[OMB Control No. 2900–NEW]

Agency Information Collection Activities Under OMB Review

AGENCY: Veterans Benefits Administration, Department of Veterans Affairs.

ACTION: Notice.

SUMMARY: In compliance with the Paperwork Reduction Act (PRA) of 1995 (44 U.S.C. 3501–3521), this notice announces that the Veterans Benefits Administration (VBA), Department of Veterans Affairs, has submitted the collection of information abstracted below to the Office of Management and Budget (OMB) for review and comment. The PRA submission describes the

nature of the information collection and its expected cost and burden; it includes the actual data collection instrument.

DATES: Comments must be submitted on or before October 15, 2004.

FOR FURTHER INFORMATION CONTACT: Denise McLamb, Records Management Service (005E3), Department of Veterans Affairs, 810 Vermont Avenue, NW., Washington, DC 20420, (202) 273–8030, fax (202) 273–5981 or e-mail *denise.mclamb@mail.va.gov*. Please refer to ''OMB Control No. 2900–NEW.'' Send comments and recommendations concerning any aspect of the information collection to VA's OMB Desk Officer, OMB Human Resources and Housing Branch, New Executive Office Building, Room 10235, Washington, DC 20503 (202) 395–7316. Please refer to ''OMB Control No. 2900–NEW'' in any correspondence.

SUPPLEMENTARY INFORMATION: *Title:* Annual Certification of Veteran Status and Veteran-Relatives, VA Form 20–0344.

OMB Control Number: 2900–NEW.

Type of Review: New collection.

Abstract: VBA employees, non-VBA employees in VBA space and Veteran Service Organization employees who have access to VA's benefit records complete VA Form 20–0344. These individuals are required to provide personal identifying information for themselves and any veteran relatives, in order for VA to identify and protect those benefit records. VA uses the information to determine which benefit records require special handling to guard against fraud, conflict of interest, improper influence etc. by VA and non-VA employees.

An agency may not conduct or sponsor, and a person is not required to respond to a collection of information unless it displays a currently valid OMB control number. The **Federal Register** Notice with a 60-day comment period soliciting comments on this collection of information was published on June 28, 2004, at page 36162.

Affected Public: Individuals or households.

Estimated Annual Burden: 5,834 hours.

Estimated Average Burden Per Respondent: 25 minutes.

Frequency of Response: Annually.

Estimated Number of Respondents: 14,000.

Dated: September 1, 2004.

By direction of the Secretary.

Loise Russell,

Director, Records Management Service.

[FR Doc. 04–20745 Filed 9–14–04; 8:45 am]

BILLING CODE 8320–01–P

DEPARTMENT OF VETERANS AFFAIRS

[OMB Control No. 2900–0521]

Agency Information Collection Activities Under OMB Review

AGENCY: Veterans Benefits Administration, Department of Veterans Affairs.

ACTION: Notice.

SUMMARY: In compliance with the Paperwork Reduction Act (PRA) of 1995 (44 U.S.C. 3501–21), this notice announces that the Veterans Benefits Administration (VBA), Department of Veterans Affairs, has submitted the collection of information abstracted below to the Office of Management and Budget (OMB) for review and comment. The PRA submission describes the nature of the information collection and its expected cost and burden and includes the actual data collection instrument.

DATES: Comments must be submitted on or before October 15, 2004.

FOR FURTHER INFORMATION CONTACT: Denise McLamb, Records Management Service (005E3), Department of Veterans Affairs, 810 Vermont Avenue, NW., or e-mail *denise.mclamb@mail.va.gov*. Please refer to ''OMB Control No. 2900–0521.'' Send comments and recommendations concerning any aspect of the information collection to VA's OMB Desk Officer, OMB Human Resources and Housing Branch, New Executive Office Building, Room 10235, Washington, DC 20503 (202) 395–7316. Please refer to ''OMB Control No. 2900–0521'' in any correspondence.

SUPPLEMENTARY INFORMATION:

Titles:

a. Credit Underwriting Standards and Procedures for Processing VA Guaranteed Loans.

b. Report and Certification of Loan Disbursement, VA Form 26–1820.

c. Request for Verification of Employment, VA Form 26–8497.

d. Request for Verification of Deposit, VA Form 26–8497a.

OMB Control Number: 2900–0521.

Type of Review: Extension of a currently approved collection.

Abstract:

a. Credit Underwriting Standards and Procedures for Processing VA Guaranteed Loans—VA set forth, in regulatory form, standards to be used by lenders in underwriting VA-guaranteed loans and to obtain credit information. Lenders must collect certain specific information concerning the veteran and the veteran's credit history (and spouse or other co-borrower, as applicable), in order to properly underwrite the veteran's loan. A loan may not be guaranteed unless the veteran is a satisfactory credit risk. VA requires the lender to provide the Department with the credit information to assure itself that applications for VA-guaranteed loans are underwritten in a reasonable and prudent manner.

b. VA Form 26–1820 is completed by lenders closing VA guaranteed and insured loans under the automatic or prior approval procedures. Lenders are required to submit with the form, a copy of the loan application (showing income, assets, and obligations) which the lender requires the borrower to execute when applying for the loan; original employment and income verifications obtained from the borrower's place of employment; original verification of assets; and original credit report.

c. VA Form 26–8497 is used by lenders to verify a loan applicant's income and employment information when making guaranteed and insured loans. VA, however, does not require the exclusive use of this form for verification purposes; any comprehensible form or independent verification would be acceptable, provided all information presently shown on VA Form 26–8497 is provided.

d. VA Form 26–8497a is primarily used by lenders making guaranteed and insured loans to verify the applicant's deposits in banks and other savings institutions.

An agency may not conduct or sponsor, and a person is not required to respond to a collection of information unless it displays a currently valid OMB control number. The **Federal Register** Notice with a 60-day comment period soliciting comments on this collection of information was published on June 25, 2004, at pages 35713–35714.

Affected Public: Business or other for profit and Individuals or households.

Estimated Annual Burden: 162,500 hour.

a. Report and Certification of Loan Disbursement, VA Form 26–1820—87,500 hours.

b. Request for Verification of Employment, VA Form 26–8497—25,000 hours.

c. Request for Verification of Deposit, VA Form 26–8497a—12,500 hours.

Estimated Average Burden Per Respondent:

a. Report and Certification of Loan Disbursement, VA Form 26–1820—15 minutes.

b. Request for Verification of Employment, VA Form 26–8497—10 minutes.

c. Request for Verification of Deposit, VA Form 26–8497a—5 minutes.

Frequency of Response: On occasion.

Estimated Number of Respondents: 650,000.

a. Report and Certification of Loan Disbursement, VA Form 26–1820—350,000.

b. Request for Verification of Employment, VA Form 26–8497—150,000.

c. Request for Verification of Deposit, VA Form 26–8497a—150,000.

Dated: September 1, 2004.

By direction of the Secretary.

Loise Russell,

Director, Records Management Service.

[FR Doc. 04–20746 Filed 9–14–04; 8:45 am]

BILLING CODE 8320–01–P

DEPARTMENT OF VETERANS AFFAIRS

[OMB Control No. 2900–0045]

Proposed Information Collection Activity: Proposed Collection; Comment Request

AGENCY: Veterans Benefits Administration, Department of Veterans Affairs.

ACTION: Notice.

SUMMARY: The Veterans Benefits Administration (VBA), Department of Veterans Affairs (VA), is announcing an opportunity for public comment on the proposed collection of certain information by the agency. Under the Paperwork Reduction Act (PRA) of 1995, Federal agencies are required to publish notice in the **Federal Register** concerning each proposed collection of information, including each proposed extension of a currently approved collection, and allow 60 days for public comment in response to the notice. This notice solicits comments for information needed to identify and locate properties for appraisal and to make assignments to appraisers.

DATES: Written comments and recommendations on the proposed collection of information should be received on or before November 15, 2004.

ADDRESSES: Submit written comments on the collection of information to Nancy J. Kessinger, Veterans Benefits Administration (20S52), Department of Veterans Affairs, 810 Vermont Avenue, NW., Washington, DC 20420 or e-mail *irmnkess@vba.va.gov.* Please refer to ''OMB Control No. 2900–0045'' in any correspondence.

FOR FURTHER INFORMATION CONTACT: Nancy J. Kessinger at (202) 273–7079 or fax (202) 275–5947.

SUPPLEMENTARY INFORMATION: Under the PRA of 1995 (Public Law 104–13; 44 U.S.C. 3501–3521), Federal agencies must obtain approval from the Office of Management and Budget (OMB) for each collection of information they conduct or sponsor. This request for comment is being made pursuant to section 3506(c)(2)(A) of the PRA.

With respect to the following collection of information, VBA invites comments on: (1) Whether the proposed collection of information is necessary for the proper performance of VBA's functions, including whether the information will have practical utility; (2) the accuracy of VBA's estimate of the burden of the proposed collection of information; (3) ways to enhance the quality, utility, and clarity of the information to be collected; and (4) ways to minimize the burden of the collection of information on respondents, including through the use of automated collection techniques or the use of other forms of information technology.

Title and Form Number: VA Request for Determination of Reasonable Value (Real Estate), VA Form 26–1805.

OMB Control Number: 2900–0045.

Type of Review: Extension of a currently approved collection.

Abstract: VA Form 26–1805 is used to collect data necessary for VA compliance with the requirements of title 38, U.S.C. 3710(b)(4), (5), and (6). These requirements prohibit VA guaranty or making of any loan unless the suitability of the property for dwelling purposes is determined, the loan amount does not exceed the reasonable value, and if the loan is for purposes of alteration, repair, or improvements, the work substantially improves the basic livability of the property. The data allows VA to identify and locate properties for appraisal and to make assignments to appraisers.

Affected Public: Individuals or households.

Estimated Annual Burden: 60,000 hours.

Estimated Average Burden Per Respondent: 12 minutes.

Frequency of Response: On occasion.

Estimated Number of Respondents: 300,000.

Dated: September 1, 2004.

By direction of the Secretary.

Loise Russell,

Director, Records Management Service.

[FR Doc. 04–20750 Filed 9–14–04; 8:45 am]

BILLING CODE 8320–01–P

DEPARTMENT OF VETERANS AFFAIRS

[OMB Control No. 2900–0474]

Proposed Information Collection Activity: Proposed Collection; Comment Request

AGENCY: Veterans Benefits Administration, Department of Veterans Affairs.

ACTION: Notice.

SUMMARY: The Veterans Benefits Administration (VBA), Department of Veterans Affairs (VA), is announcing an opportunity for public comment on the proposed collection of certain information by the agency. Under the Paperwork Reduction Act (PRA) of 1995, Federal agencies are required to publish notice in the **Federal Register** concerning each proposed collection of information, including each proposed extension of a currently approved collection, and allow 60 days for public comment in response to the notice. This notice solicits comments on information needed to pay the necessary funding fee for VA guaranteed loans.

DATES: Written comments and recommendations on the proposed collection of information should be received on or before November 15, 2004.

ADDRESSES: Submit written comments on the collection of information to Nancy J. Kessinger, Veterans Benefits Administration (20M35), Department of Veterans Affairs, 810 Vermont Avenue, NW., Washington, DC 20420 or e-mail to: *irmnkess@vba.va.gov.* Please refer to ''OMB Control No. 2900–0474'' in any correspondence.

FOR FURTHER INFORMATION CONTACT: Nancy J. Kessinger at (202) 273–7079 or fax (202) 275–5947.

SUPPLEMENTARY INFORMATION: Under the PRA of 1995 (Pub. L. 104–13; 44 U.S.C. 3501–3521), Federal agencies must obtain approval from the Office of Management and Budget (OMB) for each collection of information they conduct or sponsor. This request for comment is being made pursuant to section 3506(c)(2)(A) of the PRA.

With respect to the following collection of information, VBA invites comments on: (1) Whether the proposed collection of information is necessary for the proper performance of VBA's functions, including whether the information will have practical utility; (2) the accuracy of VBA's estimate of the burden of the proposed collection of information; (3) ways to enhance the quality, utility, and clarity of the

information to be collected; and (4) ways to minimize the burden of the collection of information on respondents, including through the use of automated collection techniques or the use of other forms of information technology.

Title: Create Payment Request for the VA Funding Fee Payment System (VA FFPS) Computer Generated Funding Fee Receipt (Formerly VA Forms 26–8986 and 26–8986–1).

OMB Control Number: 2900–0474.

Type of Review: Extension of a currently approved collection.

Abstract: A funding fee must be paid to VA before a loan can be guaranteed. The funding fee is payable on all guaranteed loans but is not required from veterans in receipt of compensation for service connected disability. The VA Funding Fee Payment System (FFPS) permits lenders to pay the funding fee online. This application calculates the appropriate fee and lenders can usually print their receipts out in 24 hours. The data entered into VA FFPS is necessary to ensure the right amount is calculated.

Affected Public: Individuals or households and business or other for profit.

Estimated Annual Burden: 14,167 hours.

Estimated Average Burden Per Respondent: 2 minutes.

Frequency of Response: One-time.

Estimated Number of Respondents: 425,000.

Dated: September 1, 2004.

By direction of the Secretary.

Loise Russell,

Director, Records Management Service.

[FR Doc. 04–20751 Filed 9–14–04; 8:45 am]

BILLING CODE 8320–01–P

DEPARTMENT OF VETERANS AFFAIRS

[OMB Control No. 2900–0253]

Proposed Information Collection Activity: Proposed Collection; Comment Request

AGENCY: Veterans Benefits Administration, Department of Veterans Affairs.

ACTION: Notice.

SUMMARY: The Veterans Benefits Administration (VBA), Department of Veterans Affairs (VA), is announcing an opportunity for public comment on the proposed collection of certain information by the agency. Under the Paperwork Reduction Act (PRA) of 1995, Federal agencies are required to publish notice in the **Federal Register** concerning each proposed collection of information, including each proposed extension of a currently approved collection, and allow 60 days for public comment in response to the notice. This notice solicits comments for information needed to evaluate a credit underwriter's experience.

DATES: Written comments and recommendations on the proposed collection of information should be received on or before November 15, 2004.

ADDRESSES: Submit written comments on the collection of information to Nancy J. Kessinger, Veterans Benefits Administration (20S52), Department of Veterans Affairs, 810 Vermont Avenue, NW., Washington, DC 20420 or e-mail *irmnkess@vba.va.gov.* Please refer to ''OMB Control No. 2900–0253'' in any correspondence.

FOR FURTHER INFORMATION CONTACT: Nancy J. Kessinger at (202) 273–7079 or fax (202) 275–5947.

SUPPLEMENTARY INFORMATION: Under the PRA of 1995 (Pub. L. 104–13; 44 U.S.C. 3501–3520), Federal agencies must obtain approval from the Office of Management and Budget (OMB) for each collection of information they conduct or sponsor. This request for comment is being made pursuant to section 3506(c)(2)(A) of the PRA.

With respect to the following collection of information, VBA invites comments on: (1) Whether the proposed collection of information is necessary for the proper performance of VBA's functions, including whether the information will have practical utility; (2) the accuracy of VBA's estimate of the burden of the proposed collection of information; (3) ways to enhance the quality, utility, and clarity of the information to be collected; and (4) ways to minimize the burden of the collection of information on respondents, including through the use of automated collection techniques or the use of other forms of information technology.

Title: Nonsupervised Lender's Nomination and Recommendation of Credit Underwriter, VA Form 26–8736a.

OMB Control Number: 2900–0253.

Type of Review: Extension of a currently approved collection.

Abstract: The standards established by VA require that a lender have a qualified underwriter review all loans to be closed on an automatic basis to determine that the loan meets VA's credit underwriting standards. To determine if the lender's nominee is qualified to make such a determination, VA has developed VA Form 26–8736a that contains information that VA considers crucial to the evaluation of an underwriter's experience. The form is completed by the lender and the lender's nominee for underwriting and then submitted to VA for approval.

Affected Public: Business or other for-profit.

Estimated Annual Burden: 750 hours.

Estimated Average Burden Per Respondent: 15 minutes.

Frequency of Response: On occasion.

Estimated Number of Respondents: 3,000.

Dated: September 1, 2004.

By direction of the Secretary.

Loise Russell,

Director, Records Management Service.

[FR Doc. 04–20752 Filed 9–14–04; 8:45 am]

BILLING CODE 8320–01–P

DEPARTMENT OF VETERANS AFFAIRS

[OMB Control No. 2900–0011]

Proposed Information Collection Activity: Proposed Collection; Comment Request

AGENCY: Veterans Benefits Administration, Department of Veterans Affairs.

ACTION: Notice.

SUMMARY: The Veterans Benefits Administration (VBA), Department of Veterans Affairs (VA), is announcing an opportunity for public comment on the proposed collection of certain information by the agency. Under the Paperwork Reduction Act (PRA) of 1995, Federal agencies are required to publish notice in the **Federal Register** concerning each proposed collection of information, including each proposed extension of a currently approved collection, and allow 60 days for public comment in response to the notice. This notice solicits comments for information needed for reinstatement of Government Life Insurance and/or Total Disability Income provision.

DATES: Written comments and recommendations on the proposed collection of information should be received on or before November 15, 2004.

ADDRESSES: Submit written comments on the collection of information to Nancy J. Kessinger, Veterans Benefits Administration (20M35), Department of Veterans Affairs, 810 Vermont Avenue, NW., Washington, DC 20420 or e-mail *irmnkess@vba.va.gov.* Please refer to ''OMB Control No. 2900–0011'' in any correspondence.

FOR FURTHER INFORMATION CONTACT: Nancy J. Kessinger at (202) 273–7079 or fax (202) 275–5947.

SUPPLEMENTARY INFORMATION: Under the PRA of 1995 (Pub. L. 104–13; 44 U.S.C. 3501–21), Federal agencies must obtain approval from the Office of Management and Budget (OMB) for each collection of information they conduct or sponsor. This request for comment is being made pursuant to section 3506(c)(2)(A) of the PRA.

With respect to the following collection of information, VBA invites comments on: (1) Whether the proposed collection of information is necessary for the proper performance of VBA's functions, including whether the information will have practical utility; (2) the accuracy of VBA's estimate of the burden of the proposed collection of information; (3) ways to enhance the quality, utility, and clarity of the information to be collected; and (4) ways to minimize the burden of the collection of information on respondents, including through the use of automated collection techniques or the use of other forms of information technology.

Title: Application for Reinstatement, VA Form 29–352 (Insurance Lapsed for more than 6 months) and VA Form 29–353 (Non-medical Comparative Health Statement).

OMB Control Number: 2900–0011.

Type of Review: Extension of a currently approved collection.

Abstract: Forms are used to apply for reinstatement of insurance and/or TDIP that has lapsed for more than six months. The information is used to establish eligibility of the applicant for the purpose of reinstatement.

Affected Public: Individuals or households.

Estimated Annual Burden: 875 hours.

VA Form 29–352: 500 hours.

VA Form 29–353: 375 hours.

Estimated Average Burden Per Respondent: 35 minutes.

VA Form 29–352: 20 minutes.

VA Form 29–353: 15 minutes.

Frequency of Response: On occasion.

Estimated Number of Respondents: 3,000.

Dated: September 1, 2004.

By direction of the Secretary.

Loise Russell,

Director, Records Management Service.

[FR Doc. 04–20753 Filed 9–14–04; 8:45 am]

BILLING CODE 8320–01–P

Federal Register

Wednesday,
September 15, 2004

Part II

Department of Labor

Occupational Safety and Health Administration

29 CFR Part 1915

Fire Protection in Shipyard Employment; Final Rule

DEPARTMENT OF LABOR

Occupational Safety and Health Administration

29 CFR Part 1915

[Docket No. S–051]

[RIN No. 1218–AB51]

Fire Protection in Shipyard Employment

AGENCY: Occupational Safety and Health Administration (OSHA), U.S. Department of Labor.

ACTION: Final rule.

SUMMARY: By this rule, OSHA promulgates a fire protection standard for shipyard employment. The proposed rule was developed through a negotiated rulemaking process. The final standard provides increased protection for shipyard employment workers from the hazards of fire on vessels and vessel sections and at land-side facilities. The standard reflects new technologies and current national consensus standards. It also gathers all fire-related safety practices for shipyard employment into a single subpart, which will make them more accessible and understandable for employers and employees.

DATES: The final rule becomes effective December 14, 2004. The incorporation by reference of certain publications listed in this rule is approved by the Director of the Federal Register as of December 14, 2004. However, affected parties are not required to respond to the information collection (paperwork) requirements until OMB approves those requirements and OSHA announces that approval in the **Federal Register**.

ADDRESSES: In accordance with 28 U.S.C. 2112(a), the Agency designates the Associate Solicitor of Labor for Occupational Safety and Health, Office of the Solicitor of Labor, Room S4004, U.S. Department of Labor, 200 Constitution Avenue, NW., Washington, DC 20210, to receive petitions for review of the final rule.

FOR FURTHER INFORMATION CONTACT: For general information and press inquiries, contact the OSHA Office of Communications, Room N–3647, Occupational Safety and Health Administration, U.S. Department of Labor, 200 Constitution Avenue, NW., Washington, DC 20210; telephone: (202) 693–1999. For technical information, contact Jim Maddux, Director, Office of Maritime Standards, N–3609, Occupational Safety and Health Administration, U.S. Department of Labor, 200 Constitution Avenue, NW., Washington, DC 20210; telephone: (202) 693–2222. For additional copies of this **Federal Register** document, contact: Office of Publications, Room N–3103, Occupational Safety and Health Administration, U.S. Department of Labor, 200 Constitution Avenue, NW., Washington, DC 20210; telephone: (202) 693–1888. For electronic copies of this **Federal Register** document, as well as news releases, fact sheets, and other relevant documents, visit OSHA's homepage at http://www.osha.gov.

SUPPLEMENTARY INFORMATION:

Table of Contents

This Preamble to the final standard is organized into the following sections:

I. Background
II. Pertinent Legal Authority
III. Summary and Explanation of the Final Standard
IV. Summary of the Final Economic and Regulatory Flexibility Analysis
V. Regulatory Flexibility Certification
VI. Environmental Impact Assessment
VII. Paperwork Reduction Act
VIII. Unfunded Mandates
IX. Federalism
X. State-Plan States
XI. Authority and Signature

I. Background

Fire Hazards in Shipyard Employment

The purpose of this standard is to increase the protection of shipyard employment workers from fire hazards. Such workers are subject to a high risk of injury and death from fires and explosions during ship repair, shipbuilding, shipbreaking, and related work activities as well as firefighting activities. Many of the basic tasks involved in shipyard employment, such as welding, grinding, and cutting metal with torches, provide an ignition source for fires. There are also many combustible materials on vessels and in shipyards, including flammable fuels, cargo, wood structures, building materials, and litter. When cutting torches are used in enclosed or confined spaces, accidentally oxygen-enriched atmospheres can cause normally fire-resistant materials to readily burn. When fires do occur, employees are often working in confined or enclosed spaces that may make escape difficult or impossible. Fires in such confined or enclosed spaces can also result in atmospheres of combustible gases, toxic fumes, or oxygen-depleted air.

Shipyard employees are therefore at risk from fires, explosions, toxic gases, and fumes that can result in burns, death, and asphyxiation from a lack of oxygen. Based on data collected by the Bureau of Labor Statistics, for a workforce totaling 97,822, there is an annual average of one fatality, 110 lost-workday ''heat/burn'' injuries, and more than three times that many total injuries due to shipyard fires (Ex. 15).

Employees are also at special risk when fighting fires in shipyards. Fighting fires at land-side facilities in shipyards can be similar to traditional firefighting at typical industrial manufacturing facilities. The usual firefighting hazards encountered include compressed gas cylinders, flammable liquid processes and storage, high-voltage electric switches and transformers, and high-density combustible materials storage. Structures at shipyards can range from single-story office buildings to warehouses to massive fabrication shops. Fires can also be encountered in tunnel sections, rail cars, vessel components, and similar units under construction, repair, or demolition at the shipyard site.

However, firefighting on board vessels is considerably different from structural firefighting. When traditional structural firefighting techniques are used on a vessel fire, the result can be ineffective and even catastrophic. The potential is much greater for serious injury to firefighting personnel when tactics do not reflect the unique nature of firefighting on vessels. Typically, in structural firefighting, immediate steps are taken to open up the structure, vertically and horizontally, to remove smoke and heat. Hose lines are then used to attack the fire. When fighting a vessel fire, there may be little or no ability to ventilate the heat, smoke, and gases produced by a fire. One of the first steps that may be taken is to shut down ventilation systems to close off the fire's progression and starve it of oxygen. Hose lines are used to cool down surrounding metal decks and bulkheads. For large or intense structural fires, a defensive fire-fighting option is to ''surround and drown.'' This means that hose lines are positioned outside the structure and voluminous amounts of water are applied until the fire goes out. Strategic options for vessel fires, on the other hand, are very limited and nearly always require an aggressive interior attack.

While larger shipyards may have their own fire responders, smaller shipyards use outside fire responders, typically the local fire department. These municipal or other fire departments may have little experience in fighting fires in shipyards, especially on vessels. Proper coordination, familiarization, and training are necessary to ensure the safety of outside firefighters who respond to shipyard fires.

Fighting vessel fires may also be more complicated than traditional firefighting because outside firefighters seldom have

the opportunity to learn the layout of the vessel. Vessels under construction or modification may have constantly changing structures. Firefighters operating on vessels under adverse conditions caused by heat and smoke can easily become disoriented or confused. Access to the vessel may be restricted by its location, such as within a dry dock, causing firefighters boarding the ship to converge on one or two access locations. This can lead to congestion of personnel and delay in locating and extinguishing the fire. Equipment, tools, and vessel components and structures can also restrict access. Staging platforms, scaffolding, rigging, cranes, and even mooring lines can hamper deploying hose lines and positioning firefighting apparatus, again causing delays and confusion. Even with unrestricted access to the vessel, deploying hose lines can be time consuming and labor intensive. To attack a fire deep within a ship, firefighting hoses may have to be stretched hundreds of feet, a task that requires time and many trained personnel.

Maintaining an adequate supply of air is another tactical problem for firefighting operations on ships. Firefighters are usually equipped with self-contained breathing apparatus (SCBA) that optimally provide a 30-minute supply, after which the compressed air bottle has to be refilled or replaced. Vessel firefighting operations can last many hours so firefighters have to be rotated frequently to resupply their SCBA and counteract fatigue.

Vessel fires may also present a problem firefighters do not often have to think about—introducing a large amount of water into the vessel, so much so that the vessel may become unstable and possibly capsize or sink. This potential problem may require consultation with experts, such as naval architects or U.S. Coast Guard engineers, to assure vessel stability.

Radio communication is another complicating factor common to fighting vessel fires. Steel bulkheads and compartments in ships block or limit radio signal transmissions. To compensate, firefighters have to relay messages from within the ship by stationing personnel with radios close enough to allow transmissions. Other alternatives include using runners or deploying hard-wire communications systems. All possible solutions to this problem involve additional personnel and delays in establishing command and control, which may increase the potential for mishaps.

Fires in shipyards present serious hazards to those who work to control them. Fire response employees are exposed to dangers such as heat, flame, smoke, explosion, structural collapse, and hazardous materials. These hazards can be found in shipbuilding, as well as in shipbreaking and ship repair. Because firefighters must function on both land-side and on board vessels, they need a single standard to cover both these situations. Likewise, other shipyard employees can benefit from a single fire protection standard for all aspects of shipyard employment by having fires extinguished more rapidly and effectively.

OSHA's general industry standards for fire protection are in Subpart L, 29 CFR Part 1910.155 through 1910.165, but § 1910.155(b) exempts maritime employments from coverage. Subpart L addresses fire prevention and firefighting methods typically used by general industry. OSHA compliance policy, set out in OSHA Instruction CPL 02–00–133, addresses typical land-side fire hazards in shipyards. Since the Agency has no specific standards that address the risks of fire on board vessels and vessel sections (also referred to as just ''vessels'' hereafter), OSHA has used the General Duty Clause Section 5(a)(1) of the Occupational Safety and Health Act (OSH Act or Act) to cite fire safety hazards at land-side facilities at shipyards and on board vessels and vessel sections. Because enforcement under the General Duty Clause requires OSHA to show, on a case by case basis, the existence of a hazard, that the hazard is recognized, that the hazard is causing or likely to cause serious physical harm to employees, and that a feasible means exists to abate the hazard, employers have not been given clear regulatory requirements to follow and enforcement has been difficult.

The Agency has concluded that codifying relevant issues for fire protection in shipyards into a single subpart in 29 CFR Part 1915 will substantially clarify an employer's responsibilities in protecting shipyard employees from fire hazards. The Agency believes that this in turn will lead to better protection for these employees.

Simply extending the application of the current general industry standards to shipyards would not be appropriate. First, most of the provisions in the general industry standards have been in effect since 1980. They would need revision to take into account technological advances that could improve fire protection in shipyard employment. Secondly, shipyard employment encompasses many tasks and worksites that are unique to the maritime industry. Employers, labor representatives, and professional and trade associations have repeatedly asked OSHA to allow all shipyard employment to be covered by a single set of standards. They point out that the work situations found within shipyard employment have more in common with each other than with those in general industry and that the hazards and methods of controlling the hazards are similar throughout the shipyard. Finally, they point out that work at land-side facilities and aboard vessels is located within the same general area and performed by the same workforce. Fire protection services are usually provided by the same in-yard plant or out-of-yard fire crews to all areas of shipyard employment. The Fire Protection in Shipyard Employment Negotiated Rulemaking Advisory Committee concluded that when fire response crews find shipyards following a single fire protection standard on vessels and land-side facilities, the crews are more effective in their fire response activities. OSHA agrees and has concluded that a single new standard addressing fire hazards for all shipyard employment, land-side and on board vessels, is reasonably necessary and appropriate to protect shipyard employees.

The Agency has concluded that fire and firefighting activities in shipyard employment pose a significant risk to employees that can result in death, burns and other serious fire-related injuries. OSHA further concludes that the standard's requirements relating to fire hazards will help save lives and prevent injuries. The Agency has also concluded that the standard is technologically and economically feasible as well as cost-effective. It will substantially reduce the risk from fire hazards by recognizing and, in some cases, requiring new fire protection technologies.

Advisory Committees and Procedural History

OSHA relied on the involvement of several advisory committees to develop this shipyard fire protection standard. The committees are the Shipyard Employment Standards Advisory Committee (SESAC), the predecessor of the Maritime Advisory Committee on Occupational Safety and Health (MACOSH), which, after reviewing pertinent federal regulations and guidelines issued by professional associations, drafted a shipyard employment fire protection standard (SESAC, Ex. 9); MACOSH, which urged OSHA to proceed with a fire protection

standard in 1995; and the Fire Protection in Shipyard Employment Negotiated Rulemaking Advisory Committee (hereafter referred to as ''the Committee''), formed in 1996 under the Federal Advisory Committee Act and the Negotiated Rulemaking Act (61 FR 28824).

The members of the Committee were: Chris Myskowski, U.S. Coast Guard; Paul Jensen, National Institute for Occupational Safety and Health (NIOSH); Joseph V. Daddura, Office of Maritime Standards, OSHA; G. F. Hurley, Norfolk Naval Shipyard; Richard Duffy, International Association of Firefighters (AFL–CIO, CLC); E.P. Kaiser, South Tidewater Association of Ship Repairs, Inc.; Guy Colonna, National Fire Protection Association (NFPA); Russ Sill, Portland Fire Bureau; Alton Glass, United Steel Workers of America (AFL–CIO, CLC), who was later replaced by John Molovich; George Broussard, Bollinger's Shipbuilding and Ship Repair, who was later replaced by Mark Duley, Walker Boat Yard, Inc.; Glenn Harris, Ingalls Shipbuilding; Donald Mozick, Atlantic Marine, who was later replaced by Terry Guidry, Bollinger's Shipbuilding and Ship Repair; Michael Buchet, United Brotherhood of Carpenters and Joiners of America, who was later replaced by Joseph Durst; Jim Paulson, National Steel & Shipbuilding Co.; and Peter Schmidt, Office of Specialty Compliance Programs, Washington State Department of Labor and Industry. The Agency wishes to thank all of the Committee members for their time, effort, and patience in helping to develop the draft proposed standard.

The Committee met nine times between October 1996 and February 2002 (Ex. 5). At its final meeting, the Committee unanimously approved a recommended standard for fire protection in shipyards. With minor editorial revisions, the Agency published the recommendations as a proposed standard on December 11, 2002 (67 FR 76213). A comment period to the proposed rule of 90 days ended on March 11, 2003. OSHA received 31 comments. The final standard continues to reflect most of the Committee's recommendations, with minor modifications made in response to the comments received from the public. The comments and modifications are discussed in the Summary and Explanation of the final standard below.

Some commenters expressed support for the proposed standard. Shipbuilders Council of America (SCA), Southwest Shipyard, Detyens Shipyards, Inc., and Gladding-Hearn Shipbuilding commended ''OSHA for recognizing the fact that day-to-day shipyard operations differ considerably from general industry and that an industry specific guideline is needed to address shipyard fire hazards'' (Exs. 21–5; 21–6; 21–7; 21–13). In addition, these commenters stated ''[t]hat the Negotiated Rulemaking Committee (Neg Reg) process that was used to draft the Shipyard Fire Protection NPRM was overall beneficial'' (Exs. 21–4; 21–5; 21–6; 21–7; 21–13). SCA, Detyens Shipyards, and Gladding-Hearn went further to state that they ''[R]ecommend using the Neg Reg for industry-specific issues that may develop in the future.'' (Exs. 21–5; 21–7; 21–13). Trinity Industries also stated that it was ''[p]leased with the Shipyard Fire Protection NPRM'' (Ex. 21–4). Puget Sound Shipbuilders Association stated:

> With a few exceptions, I find this document follows what the Seattle Fire Department Administrative Regulation 49.1 mandates for hotwork in shipyard, boatyard, and water front operations. The Seattle Fire Department regulation has made a major and positive impact on the overall safety of hot-work operations within their areas of responsibility''. Areas of Incident Command, interagency training and communication are key elements to successfully resolve issues prior to an emergency at a facility. These issues may be new to some facilities and I would encourage those who need assistance to contact the local Fire or Emergency Services Department. Many of these agencies will provide training at little or no expense. We in Puget Sound Shipyard are fortunate to have Safety Staff experienced in these elements and conduct annual training with the Seattle Fire Department. Areas of Confined Space Rescue, Pre-fire tours/planning, as well as the annual facility inspection enhance our report with the fire department. Complying with the PPE requirements should be of no strain to any maritime industry. Respirator fit testing and such is an ongoing event. Those facilities that have an ''in house'' Fire Department or Fire Brigade should already be complying with the current OSHA regulations as well as NFPA recommendations (Ex. 21–2).

II. Pertinent Legal Authority

The purpose of the OSH Act, 29 U.S.C. 651 *et seq.*, is to ''assure so far as possible every working man and woman in the nation safe and healthful working conditions and to preserve our human resources'' (29 U.S.C. 651(b)). To achieve this goal, Congress authorized the Secretary of Labor to issue and enforce occupational safety and health standards. (See 29 U.S.C. 655(a) authorizing summary adoption of existing consensus and federal standards within two years of the Act's enactment, 655(b) authorizing promulgation of standards pursuant to notice and comment, and 654(b) requiring employers to comply with OSHA standards).

A safety or health standard is a standard ''which requires conditions, or the adoption or use of one or more practices, means, methods, operations, or processes, reasonably necessary or appropriate to provide safe or healthful employment or places of employment.'' 29 U.S.C. 652(8).

A standard is reasonably necessary or appropriate within the meaning of section 652(8) if it substantially reduces or eliminates significant risk; is economically feasible; technologically feasible; cost effective; is consistent with prior Agency action or is a justified departure; is supported by substantial evidence; and is better able to effectuate the Act's purposes than any national consensus standard it supersedes. See 58 FR 16612–16616 (March 30, 1993).

A standard is technologically feasible if the protective measures it requires already exist, can be brought into existence with available technology, or can be created with technology that can reasonably be expected to be developed. *American Textile Mfrs. Institute* v. *OSHA* 452 U.S. 490, 513 (1981) (''ATMI''), *American Iron and Steel Institute* v. *OSHA*, 939 F.2d 975, 980 (D.C. Cir 1991) (''AISI'').

A standard is economically feasible if industry can absorb or pass on the cost of compliance without threatening its long term profitability or competitive structure. See ATMI, 452 U.S. at 530 n.55; AISI, 939 F.2d at 980. A standard is cost effective if the protective measures it requires are the least costly of the available alternatives that achieve the same level of protection. ATMI, 453 U.S. at 514 n.32; *International Union, UAW* v. *OSHA*, 37 F.3d 665, 668 (D.C. Cir. 1994) (''LOTO II'').

Section 6(b)(7) authorizes OSHA to include among a standard's requirements labeling, monitoring, medical testing and other information gathering and transmittal provisions. 29 U.S.C. 655(b)(7).

All standards must be highly protective. See 58 FR 16614–16615; LOTO II, 37 F.3d at 668. Finally, whenever practical, standards shall ''be expressed in terms of objective criteria and of the performance desired.'' 29 U.S.C. 655(b)(5).

III. Summary and Explanation of the Final Standard

The comments OSHA received on the proposed standard supported the Committee's general approach to the issues, as well as the need for the standard. There were suggestions related to specific provisions, and these are addressed below in the discussion of

each section. OSHA has revised the proposed regulatory text where appropriate in response to comments, and has also made minor editorial revisions to better clarify the final regulatory text.

In this rule, OSHA is incorporating by reference 19 National Fire Protection Association (NFPA) consensus standards. In keeping with past practice, the consensus standards are listed in § 1915.5, Incorporation by Reference (IBR). There are ten additional NFPA standards referenced in the preamble, but they are not incorporated by reference. Reliance on national consensus standards such as those referenced in Subpart P is a longstanding U.S. government policy. The U.S. Office of Management and Budget, in Circular A–119, directs federal agencies to use voluntary consensus standards in lieu of government-unique standards except where inconsistent with law or otherwise impractical. The majority of these consensus standards are referenced in § 1915.505, Fire Response, and § 1915.507, Land-side Fire Protection systems.

In the proposed rule, there were several incorrect references to NFPA standards that OSHA has identified and corrected in this final rule. These errors were minor and the correct referenced versions of the NFPA standards can be found in OSHA docket S–051. The following table lists the NFPA standards incorrectly cited in the proposal along with the correct citation used in the final rule:

Incorrect citations	Correct citations	NPRM page location
NFPA 10–2002 Standard for Portable Fire Extinguishers	NFPA 10–1998 Standard for Portable Fire Extinguishers ..	76250 (2 locations).
NFPA 11–2000 Standard for Low-Expansion Foam	NFPA 11–1998 Standard for Low-Expansion Foam	76236, 76250.
NFPA 15–2002 Standard for Water Spray Fixed Systems for Fire Protection (Ex. 20–19).	NFPA 15–2001 Standard for Water Spray Fixed Systems for Fire Protection (Ex. 19–19).	76236.
NFPA 17–1998 Standard for Dry Chemical Extinguishing Systems (Ex. 19–20).	NFPA 17–2002 Standard for Dry Chemical Extinguishing Systems (Ex. 19–20).	76237, 76250.

In the NPRM, OSHA proposed to delete section 1915.52, Fire prevention, which is located in Subpart D Welding, Cutting and Heating, because it is superceded by the comprehensive fire protection requirements in the new Subpart P. Section 1915.52 included the fire prevention standards for welding and burning in shipyard employment, and was the basis for many of the requirements now found in Subpart P, Section 1915.503—Precautions for hot work. No comments were received and OSHA is therefore deleting this section as proposed. Section 1915.52 will be listed as ''reserved'' to avoid any need to renumber subsequent sections, and it will be available for future use, if needed.

OSHA also proposed to delete paragraphs (d), (f), and (g) of § 1915.55, Gas welding and heating, in the NPRM. These paragraphs included provisions for the ''Use of fuel gas,'' ''Hose,'' and ''Torches,'' respectively. After re-examining this proposed deletion, OSHA has found it is necessary to retain these paragraphs. Without them, the final standard would not address potentially hazardous situations. Thus, to ensure the continued protection of workers while welding, cutting, and heating, OSHA will not delete the paragraphs.

Section 1915.501 General Provisions

Purpose

In § 1915.501(a), OSHA states the purpose of the standard is to require employers to protect all employees from fire hazards in shipyard employment, including employees engaged in fire response activities.

Scope

Paragraph (b) of § 1915.501 describes the scope of the final standard, which is all shipyard employment work, including work on vessels and vessel sections and at land-side operations, regardless of geographic location. The final requirement is nearly identical to the proposed requirement. The only change is to replace ''and/or'' with ''and.'' The scope of this subpart is consistent with that in Subpart B, Confined and Enclosed Spaces and Other Dangerous Atmospheres in Shipyard Employment, and Subpart I, Personal Protective Equipment for Shipyard Employment. It is also consistent with OSHA's previous policy concerning the scope of the Part 1915 standards.

The scope of this standard includes all fire response provided by the employers' workers, whether they are part of a fire brigade, shipyard fire department, or simply designated by the employer. Shipyard employment includes shipbuilding, ship conversion, ship repairing, shipbreaking, and related employments. It also includes operations performed during the final outfitting of vessels under construction or repair. Examples of such operations include technical support from the providers of shipboard electronic equipment as well as suppliers of internal furnishings.

The scope of the standard has broad coverage because shipyard employers are increasingly engaged in non-traditional shipyard employment such as steel fabrication of products not directly related to ships. This could include work such as construction of railroad cars, bridges, tunnel sections, smoke stacks, and boilers.

Shipyard employment also includes support operations necessary for vessel construction and repair. Such support operations include metal fabrication, machine shops, electrical shops, and paint shops, which are facilities typically found within a shipyard. Many vessel sections and vessel components are built in these shops more easily than they can be built on board a vessel. The materials are the same and often the hazards encountered are similar to fabrication on a vessel.

OSHA has included the phrase ''regardless of geographic location'' in the scope so that protection is afforded to employees wherever they engage in shipyard employment: on vessels, on vessel sections, at land-side facilities, or at any other location where they perform shipyard employment. This has been the Agency's long-standing policy on shipyard employment, and is the scope of both Subparts B and I.

Shipyard employment also occurs on vessels and vessel sections within the navigable waters of the United States, and includes work on a vessel or part of a vessel that is being constructed, repaired, or broken up, or whether it is in the shipyard or dockside, at anchor, or underway for testing. The requirements in this subpart will apply to all vessels within OSHA's jurisdictional boundaries.

Several commenters recommended a revision of paragraph (b) (Exs. 21–10; 21–15; 21–16; 22–1; 22–2; 22–3; 22–4; 22–5; 22–6; 22–7; 22–8; 22–9; 22–10; 22–11; 22–13). They suggested that the phrase ''or on land-side operations regardless of geographic location'' be

replaced with ''or at facilities where vessels or vessel sections are located.'' The commenters were concerned about the application of the standard to off-site suppliers and contractors, such as a metal shop not engaged in shipyard employment that supplies duct work to a shipyard. The commenters did not think it would be appropriate for Subpart P to apply to such establishments that only supply materials or subcomponents to be installed on a vessel or used in a shipyard.

OSHA has carried forward the proposed scope language in the final rule. However, in order to address the concerns raised, the Agency wants to clarify the degree to which it intends to regulate contract employers at shipyards. Contractors who engage in work outside of shipyards do not have to follow Subpart P within their own facilities. For example, Subpart P would not cover the metal shop described above. However, when the metal shop employees are engaged in shipyard activities within the shipyard, they must comply with Subpart P. The scope of Subpart P does not include shore side support services, such as those provided by vending equipment and mail delivery companies.

The scope of the final rule includes all employees doing shipyard-related work wherever that work takes place. For instance, whether the work is in the employers' shipyard, on a ship at anchor, or at a ship at a dock several miles away, it is considered shipyard employment. When subcontractors perform work in a shipyard, they must follow the standards of 29 CFR Part 1915.

Employee Involvement

In § 1915.501(c), OSHA requires employee participation in shipyard safety and health program activities. OSHA requires the employer to provide for the participation of employees and employee representatives in the development and review of programs and policies adopted to comply with this standard. The Committee also recommended that such employee participation and involvement be included in the standard.

Several commenters suggested that OSHA replace the word ''and'' with ''and/or'' in § 1915.501(c).

> In large companies it may not be feasible to include employees as well as employee representatives in the development of programs and policies. It is more likely that the employee representatives will participate in the development process and solicit input from their respective constituents. A large company may depend on labor union stewards or safety committee members to represent the labor force. In either case employee input is obtained. Recommendation: Make this an ''and/or'' situation. ''The employer must provide ways for the employees and/or employee representatives * * *'' (Exs. 21–3; 21–10; 21–15; 21–16; 22–1; 22–6; 22–7; 22–8; 22–9; 22–10; 22–11; 22–14).

Naval Sea Systems Command (NAVSEA) commented that

> The size of the organization/facility may limit its ability to include employees and employee representatives in the development of programs and policies. Employee representatives and/or safety boards/committees will be more likely to participate in the development process, and solicit input from their respective constituents (Ex. 22–15).

The comments raised the issue that it may not be practical for both employees and their representative to participate. The Committee and OSHA viewed the employee involvement requirement as crucial. However, the Agency agrees with these commenters that the participation of either employees or employee representatives in the development or review of programs or policies is sufficient. Examples of employee representatives include employee safety boards and committees or labor union stewards. The Agency has altered the final language will read ''employees, employee representatives, or both to participate'' to allow for employees, their representatives, or both to participate in developing and periodically reviewing programs and policies.

Multi-Employer Worksites

Paragraph (d) of § 1915.501 sets minimum requirements for exchanging information and coordinating responsibilities for fire protection among host and contract employers. These requirements are fundamental to any effective fire safety program on a multi-employer worksite. A multi-employer workplace is defined for the purposes of this rule as a workplace where there is a host employer and at least one contract employer.

The multi-employer requirements are necessary because the existence of additional employers and their employees at a workplace makes addressing safety and health conditions at the workplace more complex. For example, at a multi-employer worksite, one employer may introduce hazards into the workplace about which employees of other employers are unaware. All employers need information about relevant hazards present at the worksite to enable them to fulfill their obligations to protect workers. For these reasons, communication and coordination among employers are essential.

Failure to communicate about hazards between employers can be tragic. For example, the 1989 explosion at a Phillips 66 chemical complex in Houston, which killed 23 people and injured more than 100 workers, resulted largely from the failure to coordinate safety and health activities on a multi-employer worksite. Such tragic events and the increased reliance on contractors throughout the shipyard industry have led OSHA to conclude that responsibility for fire safety must be specifically assigned to all employers, who must then be held accountable for discharging those responsibilities. In the shipyard industry, it is common practice to hire contractors for non-routine or specialized work situations. For example, painting, joining, carpentry, and scaffolding contractors are routinely used in shipyard employment.

In the final standard, OSHA has retained in paragraph (d)(1)(i) and (ii) the proposed provisions that host employers must inform all employers at the work site about the contents of the host's fire safety plan, including hazards, controls, and emergency procedures, and assign any appropriate responsibilities for fire safety to other employers.

OSHA specifically requested input from the public on the use of the terms ''host employer'' and ''contract employer'' and whether it is clear which employer is responsible under the provisions, and whether there is another way to define or clarify which employer is responsible for implementing the requirements. Northrop Grumman/Newport News Shipyard (NGNN) submitted the only comment on this issue:

> The rule should be clarified to reflect the fact that there is typically more than one host employer at a shipyard work site or on board a vessel. For example, a ship owner may conduct work on its own vessel, or hire other contractors that are not under contract to or supervised by the shipyard where the vessel is temporarily located. Additionally, each ''host employer'' will have its own subcontractors and its specific work for the safety of which it should be responsible. The various host employers should be able to allocate among themselves in manners suitable to the individual circumstances (Ex. 21–8).

It was the clear intent of the proposal that a single shipyard employer have responsibility for acquainting every employer on site of the contents of the fire safety plan and emergency procedures. However, OSHA agrees

with Newport News Shipyard that there may be circumstances where a vessel owner may also be a host employer. Therefore, OSHA is adding a new provision, paragraph (d)(1)(iii), which also has a clarifying sentence to ensure that all employers are communicating and following their fire safety plans (see discussion below).

The definition of ''host employer'' in § 1915.509 Definitions is an employer who is in charge of coordinating work or who hires other employers to perform work at a multi-employer workplace. The definition of ''contract employer'' is an employer who performs work under contract to a host employer or to another employer under contract to the host employer at the worksite. This definition specifically excludes employers who provide incidental services that do not influence shipyard employment (such as mail delivery or office supply services).

The responsibilities of host employers are established in § 1915.501(d)(1). In paragraph (d)(1)(i), OSHA requires the host employers to ensure that information about fire hazards, controls, safety and health rules, and emergency procedures is given to all contract employers. The information includes whatever a contract employer must have to carry out its own duties as an employer under this rule.

OSHA is requiring in paragraph (d)(1)(ii) that the host employer make sure that fire protection responsibilities are specifically assigned to the various employers and contractors working at a multi-employer worksite. Some of these responsibilities include fire hazard abatement, informing employees of fire hazards before exposure, and stopping work because of an imminent danger situation. The host employer must, in conjunction with the contract employers, decide who is to train employees and control which hazards.

Contract employers must know (from the host employer) about other hazards related to fire which their employees might encounter at the workplace. Such knowledge allows contract employers to plan effectively, safely carry out their work, and understand procedures, such as what to do when a fire alarm is sounded to evacuate a vessel. Contract employers also need to inform employees of the fire hazards to which they are exposed at that worksite, the controls in place to reduce or eliminate those fire hazards, the safety and health procedures to be followed, and the steps to be taken in a fire emergency. This information lessens the likelihood that accidents will occur.

To further clarify the roles of the host employer, the Agency has added a new provision, § 1915.501(d)(1)(iii), to ensure that when there is more than one host employer, each host employer must communicate to other host employers relevant information about fire-related hazards. In addition, OSHA is adding a clarifying sentence as follows: ''When a vessel owner or operator (temporarily) becomes a host shipyard employer, by directing the work of ships' crews on repair or modification of the vessel or hiring other contractors directly, the vessel owner or operator must also comply with these provisions for host employers.''

Paragraph (d)(2) of § 1915.501 states the responsibilities for contract employers. The contract employer must inform the host employer of any fire hazards that could be created by the work being performed by its employees, and what steps the contract employer must take to address those hazards. In addition, OSHA requires that any hazards that were not previously identified by the host employer, but were identified by the contract employer, must be shared with the host employer. No comments were received on paragraph (d)(2) and OSHA has carried it forward in the final standard.

Section 1915.502 Fire Safety Plan

The final standard includes requirements for an overall program that would establish the location, type, and capacity of firefighting equipment such as extinguishers, fire hose and stand pipes, smoke detectors, automatic sprinklers, and other fixed firefighting systems in accordance with applicable fire codes. The plan must provide for the routine inspection, maintenance, and replacement of this equipment and mandate training for new workers and refresher training for all shipyard employment workers. The plan must include procedures for the control of fire hazards, such as flammable and non-flammable compressed gases, ignition sources, combustible materials, and welding and hot work operations, and must include procedures for evacuation.

Employer Responsibilities

In § 1915.502(a), OSHA is requiring the employer to develop and implement a written fire safety plan that covers all the actions that employers and employees must take to ensure employee safety in the event of a fire. A written plan enables employers and employees to see how the employer intends to protect workers; enables employers to readily exchange information; provides continuity of procedures; and provides a practical means of communication to fire response organizations. Updating the plan to reflect changing fire control technology or changing the plan to reflect different fire hazards in different work situations is readily accomplished with a written plan.

In § 1915.502(a), OSHA refers readers to an outline for a model fire safety plan, Appendix A, a non-mandatory appendix to this subpart. The purpose of Appendix A is to give guidance to any employers who may not have the expertise available to develop their own plan. If an employer chooses to use the model plan for a specific worksite, the employer meets the minimum requirements of this section, provided the employer's plan correctly follows the model outline and appropriately addresses the particular conditions at the employer's specific worksite.

Several comments were received regarding § 1915.502(a) (Exs. 21–4; 21–5; 21–6; 21–7; 21–13; 22–2). They questioned whether an employer that already has an integrated emergency action plan has to also have a separate fire safety plan. And if so, they wanted to know if the ''fire safety plan'' is meant to supersede all provisions under §§ 1910.38 and 1910.39 (Emergency Action Plans and Fire Prevention Plans). Atlantic Marine recommended that a provision be added which would accept an existing emergency action plan in place of a fire safety plan if it already met the requirements of both § 1910.38 and § 1915.502(a) (Ex. 21–17–1–1).

OSHA notes that while the Agency was developing the Part 1915 subpart F standard, OSHA also revised Part 1910, Subpart E, Exit Routes, Emergency Action Plans, and Fire Prevention Plans (67 FR 67949–67965 (11/07/2002)), which apply to general industry workplaces as well as shipyard employers. In the Part 1910 Subpart E rulemaking, OSHA revised the previous requirements for exit routes using clearer language so they are easier to understand by employers, employees, and others who use them. In addition, these revisions reorganized the text, removed inconsistencies among sections, and eliminated duplicative requirements.

The employee emergency plans and fire prevention plans that are covered by §§ 1910.38 and .39 are similar to the fire safety plans required by § 1915.502. However, there are a few key differences. Section 1910.38 requires the employer to plan for all emergencies, not just fire emergencies. Therefore, the § 1915.502 fire safety plan provisions do not adequately replace the § 1910.38 requirements and shipyard employers will still be required to comply with § 1910.38. For § 1910.39 Fire protection

plans, OSHA has determined that paragraphs (a), (b), and (d) are covered by § 1915.502, and shipyard employers are no longer required to comply with these provisions of § 1910.39. However, paragraph § 1910.39(c) contains provisions requiring employers to identify and control certain fire hazards. These provisions are not adequately addressed by § 1915.502, so OSHA has determined that shipyard employers will continue to be required to comply with the § 1910.39(c) provisions.

The Agency understands that shipyard employers who are currently complying with §§ 1910.38 and 1910.39 will now also be required to comply with the additional requirements of § 1915.502. However, there is no need to produce three separate plans, unless the employer wishes to do so. OSHA does not require employers to have separate plans as long as the unified plan covers the applicable general industry employee emergency plan and fire prevention plan provisions, as well as the shipyard employment fire safety plan. OSHA will accept one unified plan that meets all of the requirements in §§ 1910.38, 1910.39, and 1915.502.

Plan Elements

In § 1915.502(b), OSHA sets forth the elements that the employer must include in the fire safety plan. These are the identification of significant fire hazards; procedures for recognizing and reporting unsafe conditions; alarm procedures; procedures for notifying employees of a fire emergency; procedures for notifying fire response organizations of a fire emergency; procedures for evacuation; procedures to account for all employees after an evacuation; and the names, job titles, and departments for individuals who can be contacted for further information about the plan.

Reviewing the Plan With Employees

In § 1915.502(c), OSHA requires the employer to review the fire safety plan with each employee within 90 days of the effective date of this standard for employees who are currently working. It also requires employers to review the fire safety plan with new employees upon initial assignment and whenever the actions the employee must take under the plan change because of a change in duties or a change in the plan. Employees include those employees who perform hot work and fire watches, fire responders, and all other employees who are in the shipyard.

Additional Employer Requirements

In § 1915.502(d), OSHA requires the employer to keep the plan readily accessible for review by employees, their representatives, and OSHA; review and update the plan whenever necessary but at least annually; document that affected employees have been informed of the plan; and give a copy of the plan to any outside fire response organization that the employer expects may respond to fires at a worksite.

NAVSEA commented on this paragraph:

> The standard requiring a ''readily accessible'' ''updated'' fire safety plan is vague. For example, will maintenance of training records suffice as a fire safety plan? Recommend revising the standard to better define the requirements of the fire safety plan. (Ex. 22–15).

The Agency has used the terms ''readily accessible'' and ''updated'' in numerous OSHA standards. Definitions of ''readily accessible'' include that in § 1910.1200(f)(8) (''as long as no barriers to immediate employee access exist'') and § 1910.399 (''Capable of being reached quickly for operation, renewal, or inspections, without requiring those to whom ready access is requisite to climb over or remove obstacles or to resort to portable ladders, chairs, etc.''). Employees must be able to access the fire safety plan at any time during the work shift. The plan may be in a notebook, on a computer, or in any other appropriate format. The employer may have one or more locations for all safety plans and related information. Employees must know where to go to access this information and must be able to obtain the information in a timely manner. The Agency believes that the term ''readily accessible'' both in its plain meaning and other applications in OSHA regulations is sufficiently clear that no additional definition in § 1915.509 is necessary.

Updating the plan when necessary would include when there is a change in the system, the process, or in technology. This ensures that the fire safety plan will be effective for the work that is being performed at any given facility at any given time. OSHA understands that a shipyard may be working on several types of vessels during a year, and that each vessel may involve different hazards. The plan may need to be updated to cover those changes as well. For instance, if a shipyard only repairs barges, employees should be aware of the hazards associated with that particular vessel. However, if a ferry is in the shipyard for modifications or repair, the elements of the fire safety plan may need revision to address the different fire hazards associated with such a vessel. The employer must review and update the plan when necessary but at least annually. Should the process, system, and technology remain the same after one year, no update is needed. However, the employer must review the plan to ensure that no changes are needed. OSHA believes that the meaning of ''update the plan'' in § 1915.502(d)(2) is clear and this provision has been included in the final standard.

In § 1915.502(d)(3) of the proposed rule, OSHA proposed that employers certify in writing that each employee has been informed about the plan. Numerous commenters replied that this paragraph was not justified. In addition, they believed that adding a certification requirement adds no substantive protection for employees and is inconsistent with the recommendation of the Committee, which specifically approved a ''recordkeeping'' mechanism for ensuring compliance (Exs. 21–10; 21–15; 21–16; 22–1; 22–6; 22–7; 22–8; 22–9; 22–10; 22–11). Bath Iron Works stated that: ''The request for a company to 'certify in writing * * *' is unclear. Is the standard calling for a record to be maintained and does an electronic data base of training records meet the intent of the standards?'' (Ex. 21–3). All of these commenters recommended revising this paragraph and using terms such as ''maintain records,'' ''maintain training documentation,'' or ''document training records.''

Additionally, NGNN stated that:

> We do not believe that electronic media or other equally effective means should be excluded as methods that an employer may use to demonstrate to OSHA that all affected employees are informed or trained on the fire safety plan. It is impractical for the employer to be continually issuing a new ''certification'' each time an employee is hired. Training records or other means may be used more efficiently and without creating a redundant need for a separate ''certification.'' OSHA should not dictate the method but rather make it incumbent upon the employer to demonstrate that employees have been informed of the plan. (Ex. 21–8).

It recommended that the paragraph read: ''[A]ssure that each affected employee has been informed about the plan as required by paragraph (c) of this section; and * * *.'' (Id.)

OSHA's intent was to require the employer to certify that its employees have been informed, not to require a new certification for each employee. However, OSHA agrees with the commenters that the proposed language was unclear, and has changed the language to require that the employer: ''[D]ocument that affected employees have been informed * * *.'' Many employers have developed databases that track the training that each

employee has completed. This form of documentation is acceptable, as is any other effective method of documenting that all affected employees have received the training.

In paragraph (d)(4), OSHA requires that the employer provide a copy of the plan to any outside fire response organization that the employer expects to respond to fires at its worksite. No comments were received on this requirement. OSHA made minor editorial changes to this paragraph in the final standard.

Contract Employers

In § 1915.502(e), OSHA requires a contract employer's fire safety plan to be in compliance with the host employer's fire safety program. Because of the nature of the work at any given time, there may be many employers within one particular shipyard. Safety and health hazards may increase at such multi-employer worksites. OSHA's intent with this paragraph is that all employers take responsible actions to reduce these hazards when possible, and to alert other employers when hazards exist. The successful recognition of fire hazards and response to fire emergencies requires all employers on the site to follow the host employer's fire safety plan.

Several identical comments were received on this paragraph. The concern was that the wording implied that there must be two distinct and separate plans. ''The same degree of contractor safety can be achieved if the contractor agrees, in writing if necessary, to comply with the host employer's fire safety plan. This would ease the burden on the contractor and promote consistency within the shipyard.'' (Exs. 21–3; 21–10; 21–15; 21–16; 22–1; 22–6; 22–7; 22–8; 22–9; 22–10; 22–11; 22–14). OSHA agrees with these comments. If the host employer's plan includes the fire hazards the contract employer's employees will encounter, it is acceptable for a sub-contractor to simply adopt or follow the host employer's fire safety plan.

The Agency's intent was for contractor and sub-contractor employees to be provided the same level of protection as the host employer's employees while on site. It is also important that contractor employees respond as effectively as other employees to evacuations. For example, to follow the host employer's fire safety plan would include following all of § 1915.502, including reviewing the plan with employees, keeping the plan accessible and updated, and certifying that all employees have been informed of the plan. Recognizing hazards, communicating about developing hazards and responding to emergencies in a safe manner require all employers on the site to follow the host employer's fire safety plan.

Section 1915.503 Precautions for Hot Work

The purpose of this section is to reduce the potential of fire hazards and to reduce the frequency and severity of any fires resulting from hot work. Three elements are normally present for a fire to occur: An ignition source, oxygen, and a fuel source. If one element is removed, then a fire will not occur. The final rule focuses on reducing the hazards associated with fuel sources and ignition sources by removing any fuel source from the area where hot work is to be performed. If that is not possible, then isolating the fuels by using protection (shielding), posting a fire watch, or other positive means can be used to comply with the provision. These requirements reflect current industry practices and the requirements associated with § 1915.14 for flammable and combustible materials within confined and enclosed spaces and other dangerous atmospheres. Other materials may also be present that have properties that may increase the hazards associated with a fire, such as oxidizers and water reactive chemicals. The Agency concludes that fires resulting from hot work can be prevented through an authorization procedure and proper inspection of the worksite before hot work. This involves identifying fire hazards and implementing appropriate control measures that include removing hazards, inerting spaces, shielding combustibles, or posting fire watches. The Agency believes this approach will better protect shipyard workers from fire hazards associated with hot work while also reflecting the best practices of the industry.

The purpose of OSHA's requirement is to make sure that the employer identifies all fire hazards in a hot work area and takes appropriate action to prevent fires. This section relies heavily upon requirements adapted from the existing §§ 1915.52 Fire Prevention, § 1910.252 Welding, Cutting and Brazing, and from an industry consensus standard, NFPA 51B–1998 *Standard for Fire Prevention in Use of Cutting and Welding Processes* (Ex. 19–3).

General Requirements

Paragraph (a) makes clear that the requirements cover all hot work except for operations covered by Subpart B Confined and Enclosed Spaces and Other Dangerous Atmospheres in Shipyard Employment. Subpart B already covers the hazards of performing hot work in these areas. Addressing them again in Subpart P would be duplicative and unnecessary.

Paragraph (a)(1) allows the employer to designate certain areas for hot work. In designating such areas, the employer must determine through an inspection, that they are free from fire hazards. These areas are typically designed for hot work, and include fabricating shops, sub-assembly areas, and welding and burning areas within shops, such as pipe, boiler, and sheet metal shops. In ''designated areas,'' hot work operations are regular and continuous as opposed to incidental hot work operations occurring throughout the yard. Nonetheless, such areas must be initially inspected to establish them as ''designated areas'' and then maintained as such, as required in paragraph (b)(1) of this section.

OSHA received comments relating to paragraph (a)(1). One group of commenters argued that the word ''only'' should be removed from: ''[t]he employer may only designate areas for hot work'' because it implies that an employer is limited to designating areas for hot work (Exs. 21–4; 21–5; 21–6; 21–8; 21–13). OSHA agrees with these commenters and has deleted ''only'' from the requirement.

Several comments were received objecting to the term ''potential fire hazard.'' (Exs. 21–8; 21–10; 21–15; 21–16; 21–17–1; 22–1; 22–6; 22–7 through 22–11; 22–14) The commenters felt that this terminology was too broad and vague, could be improperly interpreted in the field, and should be clearly defined or changed. One suggestion was to substitute the term with ''free of fire hazards,'' which would be consistent with language used in §§ 1915.503(a)(2)(ii) and (b)(1). Another comment on this term was that: ''The use of the word ''potential'' is confusing and could be improperly interpreted in the field. Either an area has a ''fire hazard'' or it does not.'' (Exs. 21–10; 21–15; 21–16; 22–1; 22–6; 22–7 through 22–11). OSHA agrees with these commenters that using the phrase ''potential fire hazards'' could be misconstrued. Therefore, OSHA has changed the language to read ''free of fire hazards.''

Alabama Shipyard and Atlantic Marine-Mobile noted that the rule does not specify how such areas should be designated, such as by posting signs, inclusion in the fire safety plan, or some other mechanism (Ex. 22–2). In response, OSHA notes that the Agency is allowing employers flexibility in determining how to designate these hot

work areas, and only requires that they do so in an effective manner.

Paragraph (a)(2) of this section contains the requirements for authorization of hot work in non-designated areas. In § 1915.503(a)(2)(i), OSHA requires that, before authorizing hot work in a non-designated area, the employer must visually inspect the area where hot work is to be performed, including adjacent spaces, to ensure that the area is free of fire hazards, unless a Marine Chemist's certificate or Shipyard Competent Person's log is used for the authorization. OSHA believes that by requiring authorization before hot work is performed in a non-designated area, the employer will pre-plan the operation and thereby identify and control the hazards associated with hot work.

OSHA recognizes that, although Marine Chemists and Shipyard Competent Persons have specific functions to perform under Subpart B, the employer may also use them to assess whether designated and non-designated hot work areas are free from fire hazards. However, the employer is not required to do so. In a related comment, Bath Iron Works remarked that:

> Using the term '[the employer] must' implies that no one else can do the inspection. A trained mechanic may be more effective than a supervisor to perform such an inspection. Can the employer utilize employees to perform the inspection prior to hot work if it is part of their internal procedures and the employees are trained to do so? (Ex. 21–3).

OSHA does not intend for the words ''employer must'' to be interpreted to mean that a supervisory individual must conduct the visual inspection. A supervisor, the hot worker, a fire watch, or some other employee who is capable of performing the inspection may be delegated to do the inspection. Of course, it remains the employer's responsibility to ensure the area is free of fire hazards.

The paragraph requires that the inspection be performed to make sure the area is free of fire hazards. If during the inspection, combustible materials, (*e.g.*, lunch bags, newspapers, coffee cups, or rags) are within 35 feet of the hot work area, the employer can do a number of things. The employer can remove the combustible materials from the area, use barriers to safely isolate the combustible materials, post a fire watch, or not perform the intended hot work.

Similarly, as OSHA explained in the proposal (67 FR 76224), the employer is not required to produce a written authorization. While some employers will choose to produce written authorizations, such as those required by U.S. Navy contracts, others will choose to use verbal authorizations. The Agency's intent is to enable the employer to perform the steps and to assess the hazard each time it authorizes hot work, but not to require a formal written permit. Therefore, in this paragraph OSHA does not specify what form of authorization must be used.

In § 1915.503(a)(2), the employer can only authorize employees to do hot work in areas that are free of fire hazards or where fire hazards are controlled by physical isolation, fire watches, or other positive means such as inerting. Decisions about authorizing hot work must be based on an inspection by the employer, a Marine Chemist, or a Shipyard Competent Person. Authorization for hot work is appropriate only when such an inspection has shown that there are no uncontrolled combustible or flammable materials in the area.

The note to paragraph (a)(2) states: ''[T]he requirements of paragraph (a)(2) apply to all hot work operations in shipyard employment except those covered by § 1915.14.'' This note is a reminder to employers that there are instances when a Marine Chemist, a U.S. Coast Guard Authorized Person, or a Shipyard Competent Person, is required to inspect a work area prior to hot work. Under these circumstances, the employer would not need to re-inspect the same work area. Conversely, the employer's inspection will not be accepted in lieu of an inspection by a Marine Chemist, a U.S. Coast Guard Authorized Person, or a Shipyard Competent Person when required by § 1915.14.

The likelihood of the hot work areas containing combustible materials during ship repair is greater than in shipbuilding. During ship repair, as in other work, the employer must control the fire hazards prior to performing the hot work. As required in paragraph (a)(2)(ii), control of fire hazards can be by physical isolation, posting fire watches, or other positive means. For example, an employer can achieve physical isolation of combustibles by shielding them or moving them to an area at least 35 feet away from the hot work (see definition of ''physical isolation''). The 35-foot vertical and horizontal distance is consistent with current industry practice. Where combustibles cannot be moved or otherwise physically isolated, the employer can post a fire watch to control the fire hazard. Additionally, when flammable atmospheres are found adjacent to the hot work area, the employer can control the fire hazard by inerting the adjacent space with a non-reactive substance that will not support combustion. [For further information on controlling spaces (flammable atmospheres) adjacent to where hot work is being performed, see Subpart B of this Part.]

The Connecticut Department of Labor submitted the following questions in regard to these requirements:

> Pertaining to § 1915.503, what is the covered employer's responsibility regarding hot work and maintaining fire hazard free conditions when the outside contractor is on covered property? * * * How is such an outside contractor/employer treated through the entire scenario under the standard for example, does this employer need to be covered by the plan? (Ex. 22–4).

As discussed in the Scope section, contractors who perform work at shipyards are required to comply with the OSHA shipyard standards, including the requirements regarding hot work.

NAVSEA recommended that two classes of hot work be identified. These would include most hazardous (stick welding and oxyfuel cutting) and less hazardous hot work (grinding, brazing, and TIG welding) (Ex. 22–15). By separating these two, there would be separate fire watch requirements. This commenter further stated that:

> The hot worker may serve as his/her own fire watch for less hazardous hot work with the supervisor's approval. In addition, they must have an extinguisher and fire watch training. Recommend differentiating between 'aggressive' hot work and 'other' hot work. Two definitions of hot work would legitimize minor incidental gas igniters in areas that are safe to enter, but not safe for 'aggressive' industrial hot work. (Id.)

OSHA has not incorporated this suggestion into the final rule. The Agency believes that a single approach to ensuring safe hot work is simple and effective, and that for any hot work where the area has not been cleared of fire hazards, the employer must control the fire hazard with physical isolation, fire watches, or other positive means. Allowing the employer to designate particular areas for hot work addresses many of the concerns expressed by NAVSEA. In addition, the Agency does not allow the hot worker to also be the fire watch. Fire watch issues are discussed below.

Specific Requirements

In § 1915.503(b)(1), OSHA requires employers to keep all hot work areas free of hazards that may cause or contribute to the spread of fire. This requirement prevents the introduction of combustible or flammable materials during the performance of hot work.

Even though safe conditions often exist at the start of the hot work process, over the duration of the work, materials may be brought to the site, creating a fire hazard. For example, one worker may be performing hot work at the same time a worker from another job introduces combustible or flammable materials within 35 feet of the hot work operation. It is the intent of § 1915.503(b)(1) that hazard assessment be a continual process and not a singular, one-time event. Therefore, after authorizing hot work, the employer must continue to maintain a fire hazard free area. A note has been added to refer the reader to § 1915.181, Subpart L, for unexpected energizing and energy release. In addition, the reader should refer to §§ 1915.1000 to .1450, Subpart Z, for exposure to toxic and hazardous substances. No comments were received on this paragraph, and the proposed language is carried forward in the final rule.

Paragraph (b)(2) deals with fire safety issues related to fuel gas and oxygen supply lines and torches that are typically used for cutting and brazing. Paragraph (b)(2)(i) requires the employer to make sure that no unattended fuel gas and oxygen hose lines or torches are left in confined spaces. The final language in paragraph (b)(2)(i) has been adapted from 29 CFR Parts 1910.252 and § 1915.52 and NFPA 312–2000 *Standard for Protection of Vessels During Construction, Repair, and Lay-up* (Ex. 20–4). This requirement reflects the current practice in the industry, and was recommended by the Committee.

The potential danger associated with unattended fuel gas and oxygen hoses or torches in confined spaces is apparent and universally accepted. Leaking fuel gas and oxygen from unattended hoses or torches can accumulate rapidly in confined spaces leading to several hazardous conditions such as increased fire hazards, oxygen-enriched atmospheres, explosive atmospheres, and similar conditions. This paragraph seeks to eliminate the hazards associated with unattended fuel gas and oxygen hoses or torches in confined spaces.

A number of comments were received on § 1915.503(b)(2), stating that these paragraphs were not the intent of the Committee (Exs. 21–4; 21–5; 21–6; 21–7; 21–13; 21–17–1–1; 22–2). Some commenters stated that the Committee intended these requirements only for charged lines, not lines in general. (Exs. 21–8; 21–17; 21–17–1). These commenters stated that (b)(2)(i) would require the burner to leave someone to attend his or her torch while the burner returned to the supply manifold to turn on the gas. Two of these commenters raised the question of what OSHA's practice will be with the ''no unattended * * * lines'' wording (Exs. 21–7; 21–13). Other than minor editorial changes, the requirement in § 1915.503(b)(2) is the language voted upon and approved unanimously by the Committee. In addition, this will eliminate the hazard of leaving leaking lines in a confined space. The provision does not require two employees because the burner can turn on the gas and transport the torch with a charged line to the confined space. If the burner leaves the confined space, the burner can take the torch to an enclosed space, where it can be left unattended for 15 minutes. The final standard maintains the provision as proposed.

In § 1915.503(b)(2)(ii), OSHA requires employers to prohibit unattended charged fuel gas and oxygen hose lines or torches in enclosed spaces for more than 15 minutes. The language in this paragraph was adapted from 29 CFR § 1910.252 and § 1915.52 and NFPA 312–2000 *Standard for Protection of Vessels During Construction, Repair, and Lay-up* (Ex. 19–4). The potential for fire or explosion caused by unattended charged lines in enclosed spaces far outweighs the burden of pulling to open air or disconnecting.

Paragraph (b)(2)(ii) received a number of comments related to what would be considered ''charged.'' NGNN stated that:

> NGNN considers the word ''charged'' to mean that the gas is shut off at the supply manifold or cylinder and that the hose is not required to be disconnected so as to maintain the integrity of the original drop test. We are concerned that the proposed language in 1915.503(b)(2)(ii), if interpreted to mean that the line must be disconnected during unattended periods of 15 minutes or more, would permit the re-connection of the hose without positive verification of line integrity and thus create the potential for gas to be released in an enclosed space. Furthermore, we believe re-connecting and performing a drop test with the hose and torch left in place below deck is poor practice and even unsafe since gas could be released while the torch operator is determining that the line is open or leaking. Proven and equally or more protective alternative methods, such as described below, are currently used that minimize the risk in the event that hose integrity is compromised. (Ex. 21–8).

In addition, NGNN recommended that the standard be revised to read: ''No unattended fuel gas or oxygen hose lines or torches are in enclosed spaces for more than 15 minutes unless the gas supply manifold or cylinder valves are closed and the hose lines are inspected or a positive means is used to verify there is no gas leakage, prior to re-opening the manifold or cylinder supply valves.'' (Id.)

Other commenters considered lines to be uncharged when:

> [T]he gas supply [is] turned off at the manifold valve and/or cylinder valve only, and hose connection [is] not disconnected from the supply. This would allow the hose to not be charged with pressure supplied by the manifold, or cylinder, only the pressure of a drop test. The hose should not be disconnected, interfering with the integrity of the original drop test, and requiring that the drop test be redone. Disconnection of the hose could result in the possibility of mistaken connections (Exs. 21–10; 22–1; 22–6; 22–13).

OSHA's interpretation of ''charged line'' is any line that is connected to the manifold and filled with gas. Until all of the contents are discharged from the lines, there is the potential of a leak, a cut line, or a disconnection, all of which could contribute to a fire. Therefore, we do not agree with NGNN's recommendation and are maintaining this interpretation in the final rule.

OSHA finds that fuel gas or oxygen in charged hose lines has the potential to empty into an enclosed space and create a fire hazard. Therefore, the final rule includes the provision as proposed, which is consistent with the Committee's recommendation, consensus standards, and sound fire safety practice.

In paragraph (b)(2)(iii) of § 1915.503, the employer must ensure that employees disconnect all fuel gas and oxygen hoses at the supply manifold at the end of each shift. This reduces the possibility of releasing gas into an enclosed space and creating a fire hazard. However, this procedure requires the employer to make sure that hoses are safely reconnected. As described in the preamble to the proposed rule (67 FR 76225), OSHA is concerned about the possibility of hooking up at the supply manifold a different (wrong) hose whose torch end was left hanging in an enclosed space. If the wrong hose is reconnected, it may dispense oxygen and fuel gas into a space without anyone knowing, thus creating a fire or explosion hazard.

OSHA deals with this potential problem in paragraph (b)(2)(iv) of § 1915.503. When fuel gas and oxygen lines are to be disconnected, the employer has two options. One is to completely roll the lines back to the supply manifold or to open air and then disconnect the torch. The other is to use a positive means of identification on the fuel gas and oxygen hose lines before rolling out or extending the line to assure that the proper extended lines are disconnected and that the proper lines

will be reconnected, thus eliminating the hazard. Selecting the positive means of identification for the fuel gas and oxygen hose lines is left to the discretion of the employer. Examples of the positive means of identification include color coding, stamped brass tags, and stenciling of both ends of the line. Using performance language as an alternative to requiring specific methods to identify the lines provides employers with flexibility and will help to nurture developing technology in these areas.

In an identical comment, several commenters objected to proposed paragraphs (b)(2)(iii)(A) and (B), as follows:

> The preamble on pages 76225, paragraph 9 misrepresents current industry practice with regard to the use of gauges to test for compression integrity. Only one or two shipyards use gauges for the integrity test. The implied necessity of gauges imposes a large cost for many shipyards, and leaving the existing language in the final rule makes it incumbent on the shipyard to demonstrate that their practice exceeds a gauge as a means of ensuring integrity. Further, the ''locking'' system described in the preamble ensures positive identification, but does nothing to ensure integrity as implied in the discussion. As a result, we recommend that the language in the proposed rule be changed to:
>
> ''Extended fuel gas and oxygen hose lines are not reconnected at the supply manifold unless the lines are given a positive means of identification when they were first connected and positive means to insure the integrity of fuel gas and oxygen burning system is identified in employer fire plan'' (Exs. 21–4; 21–5; 21–6; 21–7; 21–13; 22–2).

OSHA disagrees with these comments. As discussed above, the employer could use stenciling of both ends of the line, color coding, stamped brass tags, and so forth to identify the lines. Of course, the lines must be identified at both ends regardless of how many sections are joined to create the run. While the preferred way to maintain integrity of the lines is the drop test using gauges, the employer may use other methods such as testing a pressurized system by using soapy water at all connections. The use of gauges may also be avoided entirely by rolling hoses back to open air.

Therefore, apart from the minor editorial changes, the only difference between the provisions of the final rule and the proposed rule is that the sections have been renumbered from § 1915.503(b)(iii)(A) and (B) to § 1915.503(b)(iii) and (iv). Thus, paragraph (iii) clarifies that the hoses must be disconnected, and paragraph (iv) makes clear that two options are available to the employer to assure that hoses are properly reconnected. The employer may roll the lines back to the supply manifold or to open air and then disconnect the torch, or the employer may keep the lines in place, identify the hose lines to assure that the proper lines are reconnected and check them for integrity. OSHA has also added a definition of ''drop test'' to the rule, as discussed in the definitions section below.

Section 1915.504 Fire Watches

The fire watch requirements of this section are divided into three parts: (a) The employer's written policy on fire watches; (b) the posting of a fire watch; and (c) fire watch assignments.

Written Fire Watch Policy

Paragraph (a) of § 1915.504 requires employers to create and keep current a written policy on fire watches. This written policy must specify the training that fire watches must receive (paragraph (a)(1)); the duties that they will perform (paragraph (a)(2)); the equipment that they will be given (paragraph (a)(3)); and the personal protective equipment (PPE) necessary for fire watches in the workplace (paragraph (a)(4)). The PPE that fire watches will need is specified in 29 CFR Part 1915 Subpart I Personal Protective Equipment. OSHA did not propose a specific format for the written policy, and none has been included in the final rule. OSHA recognizes that the employer needs the discretion to tailor the policy to its workplace.

No comments were received on the proposed text in paragraphs (a)(1) through (a)(3); OSHA is adopting them in this final rule without changes. One comment was received regarding paragraph (a)(4) of § 1915.504. Atlantic Marine recommended that: ''[T]he wording of this proposed rule be changed from 'must be given' to 'must be made available' to ensure consistency with 29 CFR 1915.152(a)—Provision and use of [personal protective] equipment'' (Ex. 21–17–1). Proposed paragraph (a)(4) stated that employees ''must be given'' PPE as required in Subpart I, and § 1915.152(a) states that the employer shall provide and shall ensure that each affected employee uses the appropriate PPE. OSHA agrees with this comment and has revised this provision to read: ''The personal protective equipment (PPE) must be made available and worn as required by 29 CFR Part 1915, Subpart I.'' With this wording, the employer has an obligation to provide the proper PPE to all fire watch employees. In addition, the employer must ensure that employees are wearing and utilizing each piece of PPE appropriately as required in § 1915.152(a).

Posting Fire Watches

Paragraph (b) of § 1915.504 requires the employer to post a fire watch during hot work if any one of eight specific conditions is present (each condition is discussed in detail below). OSHA's requirements for this paragraph are based on the Committee's recommendations.

Comments received stated that: ''There is a question of whether this is an 'and' or an 'or' listing of fire hazards.'' These commenters recommended changing the language to read: ''The employer must post a fire watch if during hot work any of the following apply:'' (Exs. 21–3; 21–10; 21–15; 21–16; 22–1; 22–6; 22–7 through 22–11). OSHA agrees and the regulatory text has been changed to read: ''The employer must post a fire watch if during hot work any of the following conditions are present.''

Atlantic Marine stated that the proposed rule ''[i]s cost burdensome to small and medium-sized shipyards.'' (Ex. 21–17–1). It requested that the eight conditions listed in § 1915.504(b) be replaced with the following language: ''An employer must post a fire watch if a Marine Chemist, a Coast Guard-authorized person, or a Shipyard Competent Person, as defined in 29 CFR 1915 Subpart B, requires that a fire watch be posted.'' (Id.)

OSHA disagrees with this commenter. Paragraph (b) is a compilation of conditions that could, according to the Committee, arise in any size shipyard employment, including small, medium, and large shipyards. The current § 1915.52(b)(3) requires:

> When the welding, cutting, or heating operation is such that normal fire prevention precautions are not sufficient, additional personnel shall be assigned to guard against fire while the actual welding, cutting, or heating operation is being performed and for a sufficient period of time after completion of the work to insure that no possibility of fire exists. Such personnel shall be instructed as to the specific anticipated fire hazards and how the fire fighting equipment provided is to be used.

The new requirements for fire watches should not therefore pose any additional burdens on employers, and will provide additional guidance for employers to help them determine when a fire watch is necessary. OSHA has concluded that these provisions are necessary and has included them in the final standard.

Paragraph (b)(1) of § 1915.504 requires controlling ignition sources for work processes that generate slag, weld splatter, or sparks that might pass through an opening and cause a fire. It has been adapted from NFPA 51B–1999

Standard for Fire Prevention During Welding, Cutting, and Other Hot Work, (Ex. 19–3) and § 1910.252(a)(2)(iii)(A)(3). The intent is to have a performance oriented requirement. If a spark can get through an opening and cause a fire, then the area must be protected. No change has been made to this provision in the final rule.

Paragraph (b)(2) of § 1915.504 recognizes that ignition sources can be controlled through the use of fire-resistant guards or curtains. Where the combustible materials cannot be protected from a possible ignition source, the employer must post a fire watch. Combustible materials can be protected through the use of fire-resistant guards or curtains. For example, a sandwich-type bulkhead could be safely protected from ignition of the combustible materials during hot work by using a fire-resistant guard or curtain. No comments were received on this paragraph. OSHA has adopted this paragraph without change.

Paragraph (b)(3) of § 1915.504 includes the 35-foot requirements (minimum distance of combustible materials from hot work) from the § 1910.252(a)(2)(vii) Subpart Q, Welding, Cutting and Brazing and NFPA 51B–1999 Standard for Fire During Welding, Cutting, and Other Hot Work (Ex. 19–3). In this paragraph, OSHA requires that an employer post a fire watch unless combustible materials are relocated to at least 35 feet beyond the hot work area, or are protected by shielding.

Numerous commenters objected to the 35 foot limit in this paragraph (Exs. 21–10; 21–15; 21–16; 22–1; 22–6 through 22–11; 22–14). In a representative comment, Bath Iron Works stated:

> In many cases hot work can be safely performed within 35 feet from unprotected, unshielded combustible materials because the ignition source cannot physically reach the combustible material. The material is considered to be protected by location. For instance: The overhead of a space contains combustible insulation. A welder needs to weld a deck penetration in the space. The welder's sparks cannot physically reach the combustible materials on the overhead because of their location. This is considered to be guarded or shielded by location. It meets the intent of the standard by adequately preventing fires. The standard does not explain that if there is no potential for the hot work to ignite the combustible material then the 35-foot rule is not applicable (Ex. 21–3).

NGNN added:

> [W]e recommend performance oriented language that requires the employer to ensure that combustibles are removed or protected when they could be ignited by the intended hot work. Removing or shielding combustible materials for a distance of 35 feet when it is not necessary to prevent ignition places a significant financial burden on the employer with no added degree of safety. We estimate that the current language will cost NGNN approximately $28 million dollars annually in labor alone. (Ex. 21–8).

NGNN recommended that paragraph (b)(3) be changed to read: ''Combustible materials that could be affected by the intended hot work must be removed, protected with flame proof covers, or otherwise shielded with metal or fire resistant guards or curtains so that material will not be ignited by the hot work.'' (Ex. 21–8).

The Committee discussed the 35-foot distance at length and agreed that if hot work is within 35 feet of combustible material in any way, a fire watch must be posted. The 35-foot distance has been in regulatory requirements and national consensus standards for many years and reflects the current industry practice. The Agency has concluded that such protection is reasonable and necessary, and has included the 35-foot rule in the final standard.

Paragraph (b)(4) of § 1915.504 addresses the hazards associated with combustible coatings, sandwich-type construction, or other insulating materials. Besides shielding, cutting back, removing the materials, and posting a fire watch, an industry practice for the acoustic foams that are commonly found in inaccessible voids within sandwich type construction is to inert the areas to make them safe for hot work. Industry practice in these situations has been to also provide fire watches with charged fire hoses or portable extinguishers as fire protection measures.

OSHA received many comments on this paragraph expressing a concern with the practice of inerting spaces (Exs. 21–8; 21–10; 21–15; 21–16; 22–1; 22–7 through 22–11). In a representative comment, Bath Iron Works stated:

> The Summary and Explanation of the Proposed Rule further complicates matters by stating that ''when flammable atmospheres are found adjacent to the hot work area, the employer can control the fire hazard by inerting the adjacent space with a non-reactive substance that will not support combustion.'' OSHA should correct this statement as it falsely implies that the employer can inert flammable atmospheres. This promotes employers to prepare spaces that contain flammable atmospheres without seeking a Marine Chemist's assistance. This is a recipe for disaster if performed by an unqualified individual. Flammable atmospheres are covered under Subpart B where a Marine Chemist certificate is required for hot work. NFPA 306, Standard for the Control of Gas Hazards on Vessels, states that ''The Marine Chemist will approve the use of the inerting medium and personally supervise introduction of the inerting medium into the space being inerted, except in situations where an inerting medium has been introduced prior to the vessel's arrival at the repair facility.'' It recognizes the hazards associated with the inerting process and places the responsibility with the Marine Chemist. It would be in OSHA's best interest to maintain this status quo (Ex. 21–3).

Recommendations for revising paragraph (b)(4) in the proposed standard from several commenters included (1) removing the language ''or the space inerted;'' (2) adding the words ''or the space inerted by a Marine Chemist or Coast Guard authorized person;'' and (3) adding the words ''or the space inerted by a qualified individual'' and identifying who is qualified. In addition, Bath Iron Works stated that ''[T]he summary and Explanation should be corrected as it improperly states that employers can inert flammable atmospheres.'' (Ex. 21–3).

OSHA agrees with these commenters that inerting a space is an activity that requires strict procedures to assure worker safety during the operation. However, it was not OSHA's intent to imply that the inerting of any space was an alternative. It was OSHA's intent to only allow inerting within the inaccessible space inside a sandwich type construction, not in any other confined or enclosed space. When an employer is dealing with a confined or enclosed space, the requirements for the use of a marine chemist under Subpart B continue to apply. To make it clear that the inerting allowed in § 1915.504 only applies in limited circumstances, OSHA has reworded the § 1915.504(b)(4) requirements as follows: ''On or near insulation, combustible coatings, or sandwich-type construction, that cannot be shielded, cut back or removed, or on a space within a sandwich type construction that cannot be inerted.''

Paragraph (b)(5) of § 1915.504 addresses the potential hazards of adjacent spaces. This paragraph is adapted from existing § 1915.52(a)(3), which states: ''[S]ince direct penetration of sparks or heat transfer may introduce a fire hazard to an adjacent compartment, the same precautions shall be taken on the opposite side as are taken on the side on which the welding is performed.'' During hot work on or near insulation, combustible coatings, or sandwich-type construction on either side, if the employer cannot cut back or remove the materials or inert the space within the sandwich type construction, a fire watch must also be

posted on the opposite side of the hot work. This requirement is intended to address the increased fire hazard potential that results from hot work conducted in areas with, or adjacent to, polyurethane or other organic foams.

In cases where hot material from hot work could spread or fall over more than one level, as in trunks and machinery spaces, a fire watch must be stationed at each affected level unless positive means are available to prevent the spread or fall of hot material. Positive means could be accomplished by placing barriers or by physically isolating an area. The same is true for adjacent spaces; a fire watch must be stationed at each affected work area. In these instances, two or more employees may be needed to perform the fire watch. OSHA received no comments on this paragraph; it is carried forward in the final rule without change.

Paragraph (b)(6) of § 1915.504 requires a fire watch during hot work when it is performed on pipes or other metal in contact with insulation, combustible coatings, or combustible materials on or near decks, bulkheads, partitions, or overheads if the work is close enough to cause ignition by radiation or conduction. The Agency requested information from the industry on the use of the term ''bulkhead'' and ''deck'' since they refer only to vessels and vessel sections. Bath Iron Works stated that these terms ''[a]re well known by the vast majority of shipyard employees.'' From a large shipyard's view point, bulkhead and deck is the proper method of identifying these structures.'' (Ex. 21–3–1). OSHA agrees and has maintained these terms in the final standard. No other comments were received on this paragraph and OSHA has carried it forward in the final rule.

Paragraph (b)(7) of § 1915.504 requires a fire watch if hot work is conducted close enough to combustible pipe or cable runs to cause ignition. This provision takes into account the large number of cable runs through vessel compartments. Although these cables must have low flame spread and smoke production rates, they are still combustible and have been responsible for the spread of fires. Also, the use of combustible piping is increasing, and although required to meet strict flame spread and smoke production criteria, the potential for fire spread through pipe runs is the same as through cable runs and should therefore be safeguarded.

In the one comment received on this paragraph, Bath Iron Works stated that:

> Paragraphs (b)(5), (b)(6) and (b)(7) can be rolled into paragraph (b)(4). They all address the potential for hot work to ignite combustible materials and the prevention methods are already listed in (b)(4), which are shielding, removal or inerting. It is unclear why these 4 paragraphs were treated separately as they appear to address the same hazard (Ex. 21–3).

Paragraph (b)(4) contains a general requirement to post a fire watch when hot work is being performed on or near insulation, combustible coatings, or sandwich type construction that cannot be protected, while the three following paragraphs provide detailed guidance for specific situations. Paragraph (b)(5) requires a fire watch when there is a fire danger caused by combustible material on the opposite side of the object on which hot work is being performed. Paragraph (b)(6) requires a fire watch when hot work is being performed in proximity to insulated materials and combustible materials or coatings, and paragraph (b)(7) requires a fire watch when hot work is being performed near unprotected combustible pipe or cable runs. OSHA believes that these paragraphs provide additional information describing the specific circumstances when a fire watch is needed, and will be of value for employers, employees, and safety professionals who are determining when a fire watch is required. OSHA has therefore maintained the regulatory language in the final standard.

Assigning Employees To Fire Watch Duty

Paragraph (c) of § 1915.504 outlines the assignment of fire watch duty. Proposed paragraph (c)(1) of § 1915.504 stated that the employer must not assign other duties to an employee assigned to fire watch. OSHA has further clarified in the final standard that an employee must not be assigned other duties when designated as fire watch by the employer while hot work is in progress. The fire watch posting is crucial to maintaining safe working areas. For example, welders with their shields down rely totally on the fire watch's observations. The watch should not be distracted by having other duties assigned at the same time.

Two commenters stated that:

> [T]here are a variety of other duties that can be accomplished by a fire watch that will not interfere with his/her ability to perform their duties as a fire watch, and in some cases may serve as a means of fire prevention, including activities such as removal and management of potentially combustible material generated during the hot work operations, assisting with welding lead and burning line management, positioning of local area ventilation, etc. We suggest that the language in § 1915.504 (c)(1) be amended to read; ''The employer may only assign other duties to an employee assigned to fire watch, that will not interfere with the performance of a fire watch's primary duty;''* * *. (Exs. 21–17–1; 22–2).

Another recommendation was: ''The employer may only assign other duties to an employee assigned to fire watch, while the hot work is [not] in progress.'' (Exs. 21–4; 21–5; 21–6).

A group of commenters stated:

> [T]his entire section defines the duties of a fire watch. It specifically states that the employer cannot assign any additional duties to this employee. It appears to have been written with a focus on a fire watch's reactions to a fire, rather than a fire watch helping to prevent and/or eliminate the potential for fire. Assigning a fire watch implies that a fire hazard exists and someone has determined it is necessary to implement additional controls. The proposed standard's description of a fire watch's duty must provide latitude for the employer to permit the fire watch to maintain safe conditions. Duties such as keeping fire resistant guards or curtains wet, ensuring that fire resistant guards or curtains are maintained in their original position and general housekeeping must be permitted. Preventing fires should be an integral part of a fire watch's duty. In the preamble, OSHA recognized the importance of maintaining conditions. Recommendation: Rewrite § 1915.504(c)(1) ''The employer must not assign other duties to an employee assigned to fire watch that would prevent him or her from performing their fire watch duties. Fire watch duties may include, for example, watching for and extinguishing incipient fires, ensuring that fire resistant guards or curtains are maintained in their original position, general housekeeping and maintaining the conditions of the area to eliminate combustible hazards' (Exs. 21–10; 21–15; 21–16; 22–1; 22–6; 22–7 through 22–11).

OSHA does not agree that fire watches should have other duties, such as those mentioned in the comments, while hot work is in progress. Fire watches must not have any distractions while performing their duties. The point is not that they only react to actual fires, but that they observe incipient fires as soon as possible. Accidents and fatalities have occurred where fire watches have been busy with other tasks or not directly observing employees performing hot work. It is crucial that a fire watch have only one task at hand '' to watch for and respond to fire hazards that occur during hot work. Should that employee be distracted in any way by performing another task, the safety of other employees is at risk.

OSHA does agree with the comments that under certain conditions the fire watch should be able to assist with fire prevention duties. In order to effectively carry out the fire watch duties, the fire watch must not perform other duties during hot work. After the hot work is

completed, however, the fire watch must remain in the area for at least 30 minutes to assure that there is no further fire hazard, unless the employer or its representative surveys the area and determines that there is no further fire hazard. During this 30-minute period, the fire watch can perform other fire prevention duties. When hot work is not being performed, there is no longer a fire watch, and the fire watch can perform other work.

If the employer has authorized hot work under § 1915.503, the area must be free of fire hazards and deemed safe for the hot work. Therefore, the employer only needs to address a change in the original conditions, such as combustible material or an out of position fire curtain. Immediate action to maintain fire hazard free conditions under § 1915.503(b)(1) is required. In this situation, the fire watch is allowed to stop the hot work and assist with fire prevention activities, such as wetting down a fire blanket, repositioning a fire curtain, and removing combustible debris that has entered the area. OSHA has modified the language of § 1915.504(c)(1) to prohibit the assignment of other duties ''while hot work is in progress,'' and has added a requirement in § 1915.504(c)(2)(iii), (discussed below) for the employer to authorize the fire watch to stop work, if necessary, and restore safe conditions in the area.

Paragraph (c)(2)(i) requires that a fire watch must have a clear view of all areas assigned. Depending on the specific circumstances, two or more employees may be required in the fire watch to assure that all areas are within view. For example, a fire watch employee may be needed on each side of a bulkhead on which hot work is being performed. This requirement also effectively precludes a hot work employee acting as his or her own fire watch.

Paragraph (c)(2)(ii) of § 1915.504 requires the employer to ensure that employees assigned to fire watch duty can communicate with workers exposed to hot work. Communication is important because a fire watch employee may not be able to see a hot worker when, for example, the fire watch employee is on the other side of a bulkhead from the hot worker (a situation that may require two or more employees to perform the fire watch). OSHA does not want to limit the means of communication. For example, in the case of a fire watch employee on the other side of the bulkhead from the employee doing hot work, the means may be as simple as tapping on the bulkhead to signal whether the hot worker can continue or must stop, or it could be an electronic communication system such as radio communication.

NGNN commented that an additional provision should be included in this paragraph:

> Duties of fire watch and hot workers should include maintaining and reestablishing safe conditions if conditions are altered during their absence. Recommend: that a new paragraph (2)(iii) be added: ''Ensures that safe conditions are maintained within the area affected by the hot work.'' (Ex. 21–8).

OSHA agrees that this is a useful addition to the paragraph. In addition to detecting potential fires, the fire watch should also ensure safe conditions. Fire watches are trained to detect fires and can attempt to extinguish any fire in the area if they are qualified and able to do so. If they are not qualified or able to extinguish the fire, they then must alert employees and activate the alarm, which will start the evacuation procedures. All of these factors qualify as ensuring safe conditions. As discussed above, OSHA agrees with the above recommendation of adding a provision that would ensure that safe conditions are maintained. This does not impose any additional requirements on the employer, and is consistent with the remaining provisions in § 1915.504(c). Therefore, OSHA has added the following provision at (c)(2)(iii) requiring the employer to assure that employees assigned to fire watch duty: ''Are authorized to stop hot work, if necessary, and restore safe conditions within the work area.'' The remaining provisions in § 1915.504(c) have been renumbered.

Proposed paragraph (c)(2)(iii) of § 1915.504 specified that the fire watch must remain in the hot work area at least 30 minutes after hot work is completed. The fire watch can be relieved sooner if the employer or the employer's representative surveys the exposed areas, conducts a post-work hazard assessment, and determines that no further fire hazard exists. Obviously, this determination can only be made after a hazard assessment is completed. The intent of this provision is to encourage employers or their representative to use the hazard assessment process throughout the work—at the beginning, middle (to see if conditions have changed), and at the end (to determine how long the fire watch may be needed). No comments were received on the proposed provision and OSHA has carried it forward in the final rule renumbered as (c)(2)(iv).

Proposed paragraph (c)(2)(iv) of § 1915.504 required that the employer ensure that employees assigned to fire watch duty are trained to detect fires that occur in areas exposed to hot work. (For a further explanation, see the Training section at § 1915.508.) Proposed paragraph (c)(2)(v) of § 1915.504 required that the fire watch must attempt to extinguish any incipient stage fires in the assigned work area that are within the available equipment's capacity and within the fire watch's training qualifications as defined in § 1915.508 Training. The term ''incipient stage fire'' is defined in the general industry fire protection standard 29 CFR 1910.155(c)(26): ''Incipient stage fire means a fire which is in the initial or beginning stage and which can be controlled or extinguished by portable fire extinguishers, Class II standpipe or small hose systems without the need for protective clothing or breathing apparatus.'' In its proposal, OSHA specifically asked whether this definition needed to be in the final standard (67 FR 76228). No comments were received on this subject. However, the Agency has added this term into the definitions (see § 1915.509 for discussion). Proposed paragraphs (c)(2)(iv) and (v) have been carried forward unchanged in the final standard but have been re-numbered as (c)(2)(v) and (c)(2)(vi).

Proposed paragraph (c)(2)(vi) of § 1915.504 required that the fire watch alert employees of any fire that goes beyond the incipient stage. The method the fire watch uses to alert other employees is not specified. The fire watch can alert in the way most suited to the worksite and conditions. Whether this is accomplished by shouting, radioing across bulkheads, waving of arms, or making hand signals is left up to the employer who will have to instruct the fire watch. In a noisy working environment, it might be most appropriate to tap hot workers on the shoulder and then motion to them to follow or exit the area. In a smoky situation, vocal communication would be more appropriate. Proposed paragraph (c)(2)(vii) of § 1915.504 stated that if fire watches are unable to extinguish fire in the areas exposed to the hot work, they must activate the alarm and start the evacuation procedure as trained, according to § 1915.508(c)(2)(xi) and the employer's fire safety plan, § 1915.502. No comments were received on these paragraphs, and they have been carried forward in the final standard re-numbered as (c)(2)(vii) and (c)(2)(viii).

Paragraph (c)(3) of § 1915.504 requires the employer to ensure that employees assigned to fire watch are physically capable of performing these duties.

During the Committee meetings, there was a concern that each member of a fire watch be able to do his or her job. Although there was much discussion on the issue, the Committee did not include a requirement stating that the employer must make sure that personnel who are expected to stand fire watch be capable of carrying out the duties of fire watch. The Committee members believed that the employer would be the best judge of physical capability and mental alertness of the fire watch. OSHA, therefore, did not include such a requirement in its proposal. Nevertheless, Bath Iron Works commented that:

> There are no physical requirements for the fire watch to comply with. This has been a common Labor/management conflict and a cause for concern.* * * Management may select employees on ''light duty'' (not capable of lifting an extinguisher) to act as a fire watch, or choose not to hire others that cannot perform the function as a result of a physical limitation. In either case, only employees that are physically capable of utilizing the fire extinguishing equipment in a variety of scenarios such as: lugging an extinguisher down inclined ladders or up vertical ladders, hauling hoses, etc. should be assigned to this duty. By spelling out this requirement in the standard we can be assured that employees performing this critical function are those that are capably fit to do so. Recommend: Add a new paragraph (c)(4) The employer shall ensure that each fire watch is physically capable to carry out his/her expected functions (Ex. 21–3).

Although it is the employer's responsibility to select an appropriate fire watch, OSHA feels that in performing this duty, the employer must assure that the employee be in good enough physical condition to fulfill his or her duties. For instance, an employee would need to have the use of both arms to lift and correctly use a fire extinguisher; be able to evacuate the work area if needed; and be able to communicate adequately in the event of a fire. If an employee cannot physically perform all of the duties of fire watch, the employer should not put that employee in such a work situation. Therefore, an additional requirement is being added to § 1915.504(c). Paragraph (c)(3) requires that: ''The employer must ensure that employees assigned to fire watch are physically capable of performing these duties.''

Section 1915.505 Fire Response

At present, OSHA does not have any specific requirements in Part 1915 for fire response in shipyard employment. This new section creates a standard that addresses shipyard fire response and is derived from the requirements of 29 CFR 1910.156 Fire brigades and from some of the provisions in NFPA 1500–2002 *Standard on Fire Department Occupational Safety and Health Program* (Ex. 19–5).

Responders to shipyard fires encounter a complex set of fire hazards involving buildings, as well as vessels in dry-dock, underway, afloat, or docked alongside a quay. Fire responders need to be prepared to safely and successfully handle a wide range of fire scenarios, from a flammable liquid storage room in a shipyard building to oil-soaked rags in the engine room of a ship. The types of fires could include ordinary combustible materials (such as wood, paper, or cloth), flammable or combustible liquids (such as oil, fuels, paints, or chemicals), insulation and other materials that may give off toxic gases and smoke during a fire, electrical fires (involving energized motors, circuit controls, transformers, or wiring), or even a rare combustible metal fire (involving metals such as magnesium, or titanium).

A fire response organization, as defined in section 1915.509 Definitions, may be provided by: (1) Fire brigades; (2) shipyard fire departments; (3) private or contractual fire departments; and (4) municipal fire departments.

Consistent with the recommendations of the Committee, OSHA is requiring that the shipyard liaison's communication with an outside fire response organization address facility and layout familiarization and coordination protocols. Federal OSHA does not have jurisdiction over state and municipal fire departments or volunteers so the standard does not cover them. However, OSHA intends to promote coordination between the shipyard and the outside fire response organization so they can work together safely. OSHA believes that any fire response organization that expects to respond to shipyard fires will benefit from the coordination activities required by this standard, and will be able to respond to fires faster, more effectively, and with greater safety for the shipyard workers and their own fire response members.

OSHA also wants to be clear that shipyard fire responders do not include support personnel responding at or near fires who have only limited support functions to perform. These support functions may include providing information to fire responders, and securing utilities, such as electrical, ventilation, and compressed air and oxy-fuel lines. These support personnel are not expected to fight fires but to perform such tasks as shutting down gas lines or disconnecting electrical service that support the fire response personnel.

NFPA submitted a statement in support of this provision.

> NFPA also supports the proposed requirements in § 1915.505 pertaining to Fire Response. The negotiated rulemaking committee highlighted a number of issues during its deliberations related to the complex fire hazards that could be encountered by any fire response unit, whether shipyard personnel or outside fire response organization. Shipyard fires could involve structural fires associated with the shipyard buildings or the fires could occur on the vessels during construction or repair. This fact about the potential locations for fires demonstrates the complex nature of the task facing any response unit. The Committee relied on OSHA's Fire Brigade requirements from 29 CFR 1910.156 and those requirements from NFPA 1500, *Fire Department Occupational Safety and Health Program* to develop a comprehensive standard that specifically addresses the shipyard fire response structure and function. NFPA commends OSHA for using voluntary consensus standards where applicable in this proposed standard. (Ex. 21–14).

Employer Responsibilities

In paragraph (a)(1) of § 1915.505, the shipyard employer is required to determine who will perform fire response in the shipyard and what type of response will be provided. Some shipyard employers, typically those with very large facilities, employ full-time shipyard firefighters and provide them with response apparatus and equipment. At the other end of the spectrum are employers at small shipyards who must rely largely on public fire protection. Because fire response capabilities vary widely within the shipyard industry, each shipyard employer must take responsibility for determining who will provide fire response services and what those services will be.

Paragraph (a)(2)(i) of § 1915.505 requires the employer to create and maintain a written policy that describes the internal and outside fire response organizations that the employer will use. In the proposal, OSHA required a ''written statement or policy'' (67 FR 76248) in § 1915.505. Upon further review, OSHA was concerned that this would cause some confusion with other requirements in subpart P. Therefore, the Agency decided to alter the language in § 1915.505 to read ''written policy'' in all requirements that were proposed as ''written statement or policy.'' This word change can be found in paragraphs (a)(2(i) and (ii), (b)(1), (b)(2), (b)(3), (b)(4), and (b)(5) of § 1915.505.

Paragraph (a)(2)(ii) of § 1915.505 requires the employer to create, maintain, and update a written policy that defines what evacuation procedures

employees must follow if the employer chooses to require a total or partial evacuation of the worksite at the time of a fire. No comments were received on paragraphs (a)(1) to (a)(3), and OSHA is carrying them forward in the final rule.

Required Written Policy Information

Paragraph (b) of § 1915.505 describes the information that must be included in the written policy required by this section. The written policy must set forth the basis for operating an internal fire response service, working with an outside fire response service, or using a combination of internal and outside fire response. A key point is to set out clearly the specific functions the fire response service is authorized and expected to perform. Employers must establish the specific functions that the fire response service will provide. The employer also must furnish the necessary resources for delivering the designated services. Such services might include structural fire response, emergency medical services, hazardous materials response, high-angle rescue, and heavy rescue.

OSHA requires in paragraph (b)(1) of § 1915.505 that, if the employer chooses to provide internal fire response, then the employer must create, maintain, and update a written policy that defines the fire response to be provided. The information would include the organizational structure of the fire response service; the number of trained fire response employees; the minimum number of fire response employees necessary; the number and types of apparatuses; a description of the fire suppression operations at the employer's facility; training requirements; expected fire response functions that may need to be carried out; and procedures for use of protective clothing and equipment. Spelling out the specific parameters of services to be provided allows the fire response service to plan, staff, equip, train, and deploy members to perform these duties.

Similarly, OSHA requires in paragraph (b)(2) of § 1915.505 that, if the employer chooses to use an outside fire response organization, then the employer must include specific information in the employer's written policy. The policy must include the following: The types of fire suppression incidents to which the fire response organization is expected to respond at the employer's facility or worksite (paragraph (b)(2)(i)); the liaison between the employer and the outside fire response organization (paragraph (b)(2)(ii)); and a plan for fire response functions (paragraph (b)(2)(iii)). This plan for fire response functions must include procedures for obtaining help from other fire response organizations (paragraph(b)(2)(iii)(A)), familiarizing the external fire response organization with the layout of the employer's facility or worksite, including access routes to controlled areas, and site-specific operations, occupancies, vessels or vessel sections, and hazards (paragraph (b)(2)(iii)(B)). The plan must also set forth how hose and coupling connection threads are to be made compatible and where the adapter couplings are kept (paragraph (b)(2)(iii)(C)), or, as an alternative, must state that the employer will not allow the use of incompatible hose connections (paragraph (b)(2)(iii)(D)).

OSHA further requires in paragraph (b)(3) of § 1915.505 that, if the employer chooses to use a combination of an internal and an outside fire response organization, then the employer must define the fire response services in addition to the requirements in paragraphs (b)(1) and (2) above, that will be provided by each fire response organization. Specifically, the following information must be included: The basic organizational structure of the combined fire response; the number of combined trained fire responders; the fire response functions that need to be carried out; the minimum number of fire response employees necessary; the number and types of apparatus; and a description of the fire suppression operations established by written standard operating procedures for each particular type of fire response at the worksite; and the type, amount, and frequency of joint training with the outside fire response organizations if given to fire response employees (paragraphs (b)(3)(i) through (v)).

Paragraph (b)(3) requires that the employer develop a written policy that describes joint training activities if such training is part of the employers plan. However, OSHA is not requiring fire responders from an outside fire response organization to participate in joint training because the standard does not apply to such outside fire organizations. The employer must make sure that the internal and external fire responses are coordinated so that the fire response is safe and effective. It would be sensible and responsible to coordinate training efforts between the two groups of fire responders. OSHA strongly recommends that internal and outside fire responders participate in joint training. In addition, it would be responsible to have the outside fire response organizations involved in the development of the written policy.

Paragraph (b)(4) of § 1915.505 addresses OSHA's longstanding policy that employers must ensure employee safety through evacuation in case of fire. The employer's evacuation policy must include the following: Emergency escape procedures; procedures to be followed by employees who may remain longer in the worksite to perform critical shipyard operations before they evacuate; procedures to account for all employees after emergency evacuation is completed; the preferred means of reporting fires and other emergencies; and names or job titles of the employees or departments who may be contacted for further information or explanation of duties. These requirements are based on similar requirements found in the general industry standards for employee emergency plans and fire prevention plans (29 CFR 1910.38 and .39).

Paragraph (b)(4)(i) requires that emergency escape procedures be included in the written policy. Emergency escape procedures in shipyard employment can vary greatly depending upon whether the worksite is located on a vessel or vessel section or in a land-side facility. For example, on a vessel at anchorage, escape routes from the vessel may be more difficult to identify than those found in land-side facilities, such as a machine shop, welding shop, cafeteria, employment office, or similar worksite. Paragraph (b)(4)(ii) requires procedures to protect employees who must remain behind to perform critical shipyard operations before they evacuate. Critical shipyard operations may include shutting down a vessel's power plant, securing utilities to the fire area, or similar activities. Additionally, accountability procedures for all employees following emergency evacuation must be established, as set forth in paragraph (b)(4)(iii). For example, employees could be directed to report to a specific location after evacuation. Another important element of the evacuation policy, found in paragraph (b)(4)(iv), is the preferred means of reporting fires or other emergencies. Examples include telephone or radio communications, fire alarms, steam whistles, verbal communication, or other tactile, visual, or audible means of communication at the employer's discretion. Finally, as a means to administer the evacuation policy effectively, the written policy must indicate the key individuals by name, job title, or department to be contacted for further information or explanation of duties under the policy, paragraph (b)(4)(v).

Paragraph (b)(5) requires that the employer include a description of the

emergency rescue procedures and names or job titles of the employees who are assigned to perform rescue and emergency response. OSHA received no comments on any of the requirements in § 1915.505(b), and is carrying them forward in the final standard.

Medical Requirements for Shipyard Fire Response Employees

Paragraph (c) of § 1915.505 addresses the physical and medical provisions for shipyard fire response employees. In paragraph (c)(1) of § 1915.505, OSHA requires that all fire response employees receive medical examinations to assure that they are physically and medically fit for the duties they are expected to perform. This approach is consistent with NFPA 600–2000 (Ex. 19–6) and NFPA 1500–2002 (Ex. 19–5), and with other OSHA standards, such as 29 CFR 1910.120 and 29 CFR 1910.156. Employees who perform fire response activities must be able to perform them properly without jeopardizing the safety and health of themselves and other firefighters. Fighting fires is a very hazardous and strenuous job. Some employees may not be physically able to engage in a fire response situation that would require hours of difficult and heavy-duty work. OSHA is requiring the employee's physical and mental fitness be in accord with the duties the employee will perform.

Paragraph (c)(2) of § 1915.505 requires that fire response employees who are required to wear respirators while performing their duties meet the medical requirements of § 1915.154 Respiratory protection. This requirement is consistent with 29 CFR 1910.134(c)(1) that requires employers whose employees use respirators to develop and implement a respiratory protection program. One of the elements of a respiratory protection program is providing medical evaluations for employees who use respirators.

Paragraph (c)(3) of § 1915.505 requires that the employer provide all fire response employees with an annual medical examination. Further, in paragraph (c)(4), medical records of fire response employees must be kept according to § 1915.1020 Access to employee exposure and medical records. These proposed requirements are consistent with existing regulations found in 29 CFR 1910.156 and 29 CFR 1910.134.

NGNN questioned the proposed requirements:

> Does OSHA mean that a medical examination should be conducted to identify any condition that may interfere with a fire fighter doing his or her job, or does OSHA intend that shipyard fire fighters also meet certain physical fitness standards? OSHA needs to address how the medical examination/physical standards requirement applies to shipyards that are unionized and have collective bargaining agreements in place. Can implementation be delayed for the remainder of the current agreement's term? Or until a fixed date, or are employers and unions required to reopen and negotiate impact and implementation of the new standards? This requirement should receive much more detailed consideration. (Ex. 21–8).

The employer is responsible for ensuring that employees are qualified for the fire response activities. The fire response employees must be able to perform their duties and not create another hazard by jeopardizing the safety and health of themselves or others. OSHA has not set specific physical fitness standards that the fire response worker must meet. It is up to the employer to determine the physical fitness level that will be needed to keep each fire response person safe. This will depend upon the duties each of them is assigned.

Likewise, OSHA has not included any provisions to account for existing union agreements. The employer is responsible for addressing any issues related to union bargaining agreements. Employees must be protected equally under the standard, whether or not a union contract is in effect. In summary, without an annual examination, the employer can not be sure that the fire responder is able to do the job at hand. Therefore, OSHA has adopted this provision as proposed.

Organization of Internal Fire Response Functions

Paragraph (d)(1) of § 1915.505 requires the employer to organize its fire response functions to ensure that there are enough resources to safely conduct emergency operations at the site. This language is consistent with the goals and language of paragraph 4.1.1 of NFPA 1500–2002 (Ex. 19–5) addressing the fire department's organizational statement. No comments were received on paragraph (d)(1) and OSHA has included it in the final rule as it was proposed.

In paragraph (d)(2) of § 1915.505, OSHA proposed that the employer: ''[s]et up written administrative regulations, standard operating procedures, and departmental orders for fire response functions.'' The proposed language was based on Chapter 4 of NFPA 1500–2002 addressing the organization of fire response providers and Chapter 2.1 of NFPA 600–2001 addressing the general administration of industrial fire brigades.

No comments were received on paragraph (d)(2). However, upon reconsideration, OSHA has decided that the requirement was not easily understood, and it was unclear how it differed from the written policy requirements for internal fire response proposed at § 1915.505(b)(1). Therefore, OSHA has modified § 1915.505(d)(2) using NFPA 600–2001 to require employers to: ''Establish lines of authority and assign responsibilities to ensure that the components of the internal fire response are accomplished.'' This language provides a clearer description of the provision's requirements than the terms ''administrative regulations'' and ''departmental orders.'' There is no need to include a requirement for ''standard operating procedures,'' as they are already required in § 1915.505(b)(1).

In paragraph (d)(3) of § 1915.505, OSHA requires the employer to set up an Incident Management System (IMS) to coordinate and direct fire response functions. This system must include specific fire emergency responsibilities; how the employer will account for all fire response employees during an emergency operation; and what resources would be offered by outside organizations. This is consistent with the goals and language found in paragraph 8.1 of NFPA 1500–2002.

The Connecticut Department of Labor raised a question regarding the provision, asking: ''Why does the proposed standard change the customary verbiage of incident command system to incident management system? Will this confuse fire departments that will also be involved in the firefighting?'' (Ex. 22–4).

While the Incident Command System (ICS) term is customary language often used by firefighting professionals, OSHA proposed to use the IMS term to be consistent with the terms currently in use by firefighting organizations and training institutions. The most recent NFPA standards use the IMS term, including NFPA 1500–2002 Fire Department Occupational Safety and Health Program, NFPA 600–2000 Requirements for All Industrial Fire Brigades, and NFPA 1561–2000 Emergency Services Incident Management System. In addition, the IMS term is commonly used by organizations that train firefighters. For example, individual courses on incident management are currently offered by the Maryland Fire and Rescue Institute (*http://apps.mfri.orrg*) and the Federal Emergency Management Agency National Fire Academy (*http://www.usfa.fema.gov/fire-service/nfa/nfa.shtm*). Because the IMS is the

preferred term, OSHA is using the IMS term in the final rule.

OSHA is also modifying the proposed definition of IMS in § 1915.509 to match the definition used by NFPA in NFPA 1500–2002, which is: ''A system that defines the roles and responsibilities to be assumed by personnel and the operating procedures to be used in the management and direction of emergency operations; the system is also referred to as an incident command system (ICS).'' This modification does not change the meaning or intent of the proposed term, and is more consistent with the NFPA's use of IMS.

Paragraph (d)(4) of § 1915.505 requires that employers provide specified information to the outside fire response organization to be used. These provisions are consistent with existing OSHA requirements (29 CFR 1910.120 Hazardous waste operations and emergency response and 29 CFR 1910.156 Fire brigades). No comments were received on paragraph (d)(4), and it is included in the final standard.

Personal Protective Clothing and Equipment for Fire Response Employees

Paragraph (e) of § 1915.505 contains the requirements for providing personal protective clothing and personal protective equipment for shipyard fire response personnel. Paragraph (e)(1) requires that the employer must provide fire response employees with hazard specific personal protective clothing and equipment at no cost to the employees. The employer must also make sure that each employee wears the appropriate personal protective clothing and equipment that offers protection from the hazards to which that employee is likely to be exposed. This is consistent with the language found in Chapter 7 of NFPA 1500–2002 (Ex. 19–5). It is also consistent with existing OSHA standards.

In § 1915.505(e)(2), OSHA states the requirements for thermal stability and flame resistance or protective clothing. Paragraph (e)(2)(i) requires the employer to make sure that each fire response employee exposed to flame hazards wears clothing that minimizes the extent of injury that the fire response employee would sustain. Paragraph (e)(2)(ii) specifically prohibits the wearing of clothing made from acetate, nylon, or polyester, either alone or in blends, unless it can be shown that the fabric can withstand the flammability hazard that could be encountered, or that the clothing is worn in such a way to eliminate the flammability hazard that may be encountered. This language is consistent with the language in existing OSHA standards and in paragraph 7.1.6 of NFPA 1500–2002 (Ex. 19–5).

Paragraph (e)(3) of § 1915.505 addresses respiratory protection for shipyard fire response employees. Under paragraph (e)(3)(i), the employer must provide self-contained breathing apparatus (SCBA) to all shipyard fire response employees who are involved in emergency operations in an atmosphere that is or may become immediately dangerous to life or health (IDLH), or is unknown. This language is consistent with existing OSHA standards and paragraph 7.8.7 of NFPA 1500–2002 (Ex. 19–5).

Under paragraph (e)(3)(ii) of § 1915.505, the employer must provide SCBAs to fire response employees performing emergency operations during hazardous chemical emergencies that will expose them to airborne chemicals. OSHA recognizes that there may be a potential for employee exposure to hazardous chemicals during fire response emergencies due to the nature of shipyard employment. This requirement would limit employers to the use of SCBAs for this type of chemical exposure.

Under paragraph (e)(3)(iii) of § 1915.505, the employer must provide either SCBA or respiratory protective devices to fire response employees who perform or support emergency operations that will expose them to hazardous chemicals. The SCBA or respiratory device must be certified as required in § 1910.134, and as required by NIOSH under 42 CFR Part 84 as suitable for the specific chemical environment.

Under paragraph (e)(3)(iv) of § 1915.505, the employer must ensure that additional outside air supplies used in conjunction with respirators be positive pressure systems and certified by NIOSH under 42 CFR Part 84. Again, this is consistent with existing OSHA standards and paragraph 7.10.1.1 of NFPA 1500–2002 (Ex. 19–5). No comments were received on paragraphs (e)(3)(i) through (e)(3)(iv) and OSHA has adopted them as proposed.

Under paragraph (e)(3)(v) of § 1915.505, the employer must provide SCBAs that meet the requirements of NFPA 1981–1997, Standard on Open-Circuit Self-Contained Breathing Apparatus for the Fire Service (Ex. 19–7). This is standard equipment for all fire response organizations throughout the country.

NAVSEA stated that: ''The latest version of National Fire Protection Association (NFPA) 1981, Standard on Open-Circuit Self-Contained Breathing Apparatus for Fire and Emergency Services is 2002 versus 1997.'' (Ex. 22–15). In the proposed rule (67 FR 76231). OSHA proposed using the 1997 version. Thus, adequate notice and comment on updating to the 2002 version has not been provided. As a result, the 1997 version is referenced in § 1915.505(e)(3)(v) in the final standard. With publication of this document, OSHA recognizes that several of the NFPA standards have been revised since the proposed rule was published. OSHA intends to publish a direct final rule to update the references to the most recent NFPA standards in the near future.

In § 1915.505(e)(3)(vi), OSHA requires that the employer ensure that the establishment of a respiratory protection program and use of respiratory protective equipment is in compliance with § 1915.154 Respiratory protection. Similar requirements are found in 29 CFR 1910.134, and 29 CFR 1910.156 for general industry. The Connecticut Department of Labor raised the following:

> § 1915.505(e)(3)(vi) mandates compliance with 29 CFR 1915.154, which in turn incorporates by reference 29 CFR 1910.134. Does the language of this subsection of the proposed section which mandates compliance with the respiratory protection program of § 1910.134, include the procedures for IDLH atmospheres referenced in § 1910.134(g)(3) and (4) of the respiratory standard, including the requirement for what's known as two in and two out? (Ex. 22–4).

As the State of Connecticut points out, OSHA states in § 1915.154 that respiratory protection for shipyards is covered under 29 CFR 1910.134. Therefore, shipyard employment is covered by the entire section, which would include § 1910.134(g) as well as all other provisions of § 1910.134.

Paragraph (e)(4) of § 1915.505 addresses personal protective equipment for fire response employees who are exposed to the hazards of interior structural firefighting within shipyard employment. The employer must provide, at no cost to the employee, helmets, gloves, footwear, and protective hoods, and either protective coats and trousers, or protective coveralls that meet the applicable recommendations in NFPA 1971–2000 Standard on Protective Ensemble for Structural Fire Fighting (Ex. 19–8). Paragraph (e)(4) is based upon Chapter 7 of NFPA 1500–2002 (Ex. 19–5). OSHA received no comments on this paragraph, and the proposed language is carried forward in the final standard.

Under paragraph (e)(5), the employer must, at no cost to employees, supply all fire response employees who are exposed to the hazards of proximity

firefighting with the appropriate protective proximity clothing that meets the applicable requirements of NFPA 1976–2000, *Standard on Protective Ensemble for Proximity Fire Fighting* (Ex.19–9). Only shipyard employees who engage in operations that expose them to the intense radiant heat of a proximity firefighting incident (the proximity hot zone) must be equipped with specialized proximity firefighting protective clothing. No comments were received on this provision and OSHA has adopted it as proposed.

Under paragraph (e)(6) of § 1915.505, the employer must provide a Personal Alert Safety System (PASS) device to each fire response employee involved in firefighting operations. The PASS devices must meet the recommendations in NFPA 1982–1998 Standard on Personal Alert Safety Systems (PASS) (Ex. 19–10). This requirement is consistent with paragraph 7.13.1 of NFPA 1500–2002 (Ex. 19–5) and no comments were received. The provision is adopted as proposed.

A PASS is a device that is attached to or is an integral part of self-contained breathing apparatus (SCBA). It automatically sounds a distinctive alarm (some units also display a flashing strobe light) if a fire response employee becomes immobile for a pre-determined period of time (usually 30–40 seconds). For example, the device would be activated in the event a fire responder becomes incapacitated from structural collapse or runs out of breathing air. Fire response employees who might become trapped or lost can also activate the device manually to help searchers locate them. The shrill alarm allows rescuers to locate the wearer quickly in dark or heavy smoke conditions. The alerting sound of a PASS can easily be distinguished from a low air supply alarm emitted by a SCBA. PASS devices are now considered standard issue for fire fighters and are recommended by NFPA 1982–1998. (Ex. 19–10).

Section 1915.505(e)(7) addresses life safety ropes, body harnesses, and hardware. No comments were received on these provisions and they are being adopted as proposed. Under paragraph (e)(7)(i), OSHA requires all life safety ropes, body harnesses, and hardware used by fire response employees for emergency operations to meet the applicable requirements of NFPA 1983–2001, Standard on Fire Service Life Safety Rope and System Components (Ex. 19–11). This is consistent with Subpart I of this Part and paragraph 7.14.1 of NFPA 1500–2002 (Ex. 19–5). Under paragraph (e)(7)(ii) of § 1915.505, the employer may allow only Class I body harnesses to be used to attach fire response employees to ladders and aerial devices. This is consistent with NFPA 1983–2001 (Ex. 19–11). Under paragraph (e)(7)(iii), the employer may only allow Class II and Class III body harnesses to be used by fire response employees for fall arrest and rappelling operations. This is consistent with NFPA 1983–2001 (Ex. 19–11). No comments were received on paragraph (e)(7) and OSHA has carried it forward in the final rule.

Equipment Maintenance

Paragraph (f) of § 1915.505 addresses the maintenance of personal protective equipment and fire response equipment. Under paragraph (f)(1), the employer must inspect and maintain personal protective equipment used to protect fire response employees to ensure that it provides the intended protection. Such inspection and maintenance is consistent with OSHA's personal protective equipment standards, § 1910.132.

Under paragraph (f)(2), the employer must test and maintain fire response equipment consistent with sound safety practices and the requirements for tools and equipment found in Chapter 7 of NFPA 1500–2002 (Ex. 19–5). Paragraph (f)(2)(i) requires the employer to keep fire response equipment in a state of readiness. In paragraph (f)(2)(ii), the employer must make sure that all fire hose coupling and connection threads are standardized throughout a facility and on vessels and vessel sections by providing the same type of hose coupling and connection threads for hoses of the same or similar diameter.

If the employer uses an outside fire organization for fire response, and the employer expects them to use the fire response equipment belonging to the employer, then under paragraph (f)(2)(iii), the employer must ensure that either all of its facility's hose and coupling connection threads are the same as those used by the outside fire authority or that suitable adapter couplings are supplied. This requirement is consistent with paragraph 9.3 of NFPA 14–2000 (Ex. 19–12). The Agency did not receive any comments on this paragraph, and the provisions are being adopted as proposed.

Section 1915.506 Hazards of Fixed Extinguishing Systems on Board Vessels and Vessel Sections

This section addresses the hazards associated with fixed extinguishing systems on vessels and vessel sections that could create a dangerous atmosphere when such systems are activated. Of particular concern is the incorrect or inadvertent activation of these systems. Fixed fire extinguishing systems at land-side facilities are covered by the next section of this proposed subpart, § 1915.507 Land-side fire protection systems.

The hazards associated with the use of fixed extinguishing systems on vessels and vessel sections have long been recognized by the United States Coast Guard as evidenced by Coast Guard Commandant Notices and Instructions that date from 1978. The International Maritime Organization (the United Nations' specialized agency responsible for improving maritime safety and preventing pollution from ships) has also addressed this issue by issuing regulations that are part of the International Convention for the Safety of Life at Sea (SOLAS).

Testing vessels' fixed extinguishing systems has led to several fatalities. In October 1996, aboard the Italian flag ship SNAM PORTVENERE, an American Bureau of Shipping surveyor and five shipyard technicians were killed when carbon dioxide (CO_2) was released accidentally from a fixed fire extinguishing system that was being tested. On May 3, 1993, while a contractor was testing a low-pressure CO_2 system aboard the M/V CAPE DIAMOND that protected the ship's engine room, CO_2 was discharged accidentally, causing the deaths of a Coast Guard marine inspector and a shipyard contractor. Additionally, an intentional activation of a manual CO_2 extinguishing system aboard the Australian naval vessel HMS APPLELEAF caused the accidental death of four persons. These incidents were attributed to human error in which the discharge of CO_2 extinguishing systems protecting spaces aboard vessels was allowed to occur while employees were working inside.

This section has gone through some modifications since the proposal. The section has been modified in several areas to address concerns raised by commenters, and to assure that the section adequately addresses the hazards associated with fixed extinguishing systems on board vessels and vessel sections.

Employer Responsibilities

The Committee recognized, and OSHA agrees, that although the casualty history reveals problems only with CO_2 systems, similar hazards exist for the use of new extinguishing agents and application methods. Therefore, the employer's responsibilities under paragraph (a) of § 1915.506 apply to all fixed extinguishing systems on vessels

and vessel sections that may result in a dangerous atmosphere if discharged. It is very likely that the only systems that may be affected by this standard will be those that employ gaseous or two-phase (gaseous/liquid) extinguishing agents. However, by including all systems that may create a dangerous atmosphere when activated, the standard is broad enough to cover future systems and extinguishing agents. Examples of future possibilities include systems employing dry chemical extinguishing agents (these systems currently exist but are not typically installed on vessels), combination dual water/dry chemical systems, and systems using Halon alternative agents.

Several comments were received on paragraph (a) of § 1915.506, including:

The proposed standard does not recognize differences between fire suppression systems and different extinguishing agents. Alternatives to CO_2 often do not present the same hazards as fixed CO_2 systems. * * * Rewrite 1915.506(a) ''* * * The employer must comply with the provisions of this section whenever employees are exposed to fixed extinguishing systems charged with materials that could create hazardous atmosphere when activated aboard vessels and vessels sections, regardless of geographic location. Fixed systems that do not cause hazardous atmospheres when activated, including those charged with foam, inert materials, or water sprinklers, are not subject to this section.'' (Exs. 21–10, 21–15, 21–16, 22–1, 22–6, 22–7 through 22–11).

NGNN stated:

NGNN agrees with the need to address controls required for working in spaces with fixed extinguishing systems. We believe that systems should remain armed only when the risk to the vessel and workers outweighs the risk if the system were to be inadvertently activated by the work being performed. Therefore, NGNN has instituted procedures and training to ensure work can be safely performed in those rare cases when a system must remain armed. However, our procedures recognize the greater risk posed by a carbon dioxide system versus less hazardous extinguishing media, such as halon. We recommend that OSHA consider the differences in various shipboard fire suppression systems that do not present the same risk as carbon dioxide systems. Some systems use the same compounds used in computer rooms across the country and present far less risk than carbon dioxide systems. (Ex. 21–8).

Great Lakes stated that:

§ 1915.506 (a) of the proposed rule introduces ambiguity. The rule should be clarified so that ''exposure to fixed extinguishing systems that could create a hazardous atmosphere'' refers to the properties of the agent itself and not to by-products of the combustion process or extinguishment. Actual fire events should be treated separately and require crew egress from the affected space prior to extinguishing system discharge, as required by fire standards. Section 1–6.1.2 of NFPA 2001 standard for clean agent fire extinguishing systems deals with the issue of human exposure to the agent itself. While exposure to any clean agent should be minimized, the standard does specify safe human exposure times to clean agents at various design concentrations in normally occupied spaces. In the case of HFC–227ea (the active ingredient in FM–200 brand clean agent) the standards allow for installation of systems in occupied spaces up to the LOAEL (Lowest Observable Adverse Effect Level) of 10.5% v/v. In Table 1–6.1.2.18 of NFPA 2001, the recommended exposure time to HFC–227ea for concentrations of 10.5% v/v or less is five minutes. It should also be noted that HFC–227ea is approved by U.S. FDA as a replacement for ozone-depleting CFC propellants in asthma inhalers. In contrast, the standard for carbon dioxide extinguishing agent (NFPA 12) prohibits human exposure to the agent due to its inherent lethality. The time limit for safe human exposure is determined by the toxicological profile of each agent. Therefore, we recommend the proposed rule be revised to base worker exposure to any fire extinguishing agent on the agent's human safety profile. We also recommend the proposed rule direct shipyard employers to follow safety procedures contained in the NFPA standard for their chosen fire suppression agent. (Ex. 22–5).

While developing this standard, the Committee discussed whether to include requirements for other systems that do not cause dangerous atmospheres when activated, such as foam and automatic water sprinkler systems. After extensive discussion, the Committee decided that a standard for these systems was not necessary because they are not typically relied upon on board vessels and vessel sections, and they do not pose a significant safety and health threat to employees. The Agency agreed and proposed to cover only systems that could create a hazardous atmosphere when activated. Both NGNN and Great Lakes supported the provision not applying when the extinguishing agent is not hazardous. OSHA continues to believe that this is the proper approach and has not altered this provision in the final standard. It is up to the employer to determine when a dangerous atmosphere will be created, either by the properties of the extinguishing agent, or the byproducts that may be produced when it is used. If a dangerous atmosphere will be created, the employer must take action under § 1915.506 to protect its employees.

Requirements for Automatic and Manual Systems

Under paragraph (b) of § 1915.506, the employer must protect its employees who may be exposed to a dangerous atmosphere by a fixed fire extinguishing system by taking one of two actions. First, the employer may physically isolate the system by disconnecting or blanking, or by using other positive means to prevent the system's discharge. This is possible for most types of shipyard work, and is the preferable method of protection because when the system is isolated, employees cannot be exposed to a dangerous atmosphere. However, OSHA recognizes that some shipyard work must be conducted with the system activated. In those situations, the employer must take the second form of action by ensuring that employees are trained to recognize the system's discharge and evacuation alarms and the appropriate evacuation routes, and by ensuring that they are knowledgeable about the extinguishing system, its components, and its hazards.

In paragraphs (b), (e), and (f) of § 1915.506, the term ''physically isolated'' refers to physically preventing the extinguishing agent from entering the work area. This is typically done by installing a blank (a flat piece of metal between two flanges) in the supply line of the extinguishing system so that the extinguishing agent can not possibly be released into the protected area.

Several comments were received on proposed Paragraph 1915.505(b). Bath Iron Works stated:

There is confusion as to how the five paragraphs in this section fit together. The section addresses work in a space equipped with fixed extinguishing systems. It mandates that the system be physically isolated (para 1) or that employees be trained to recognize systems discharge, evacuation alarms and escape routes (para 2). It appears that there are three additional requirements (para 3, 4 and 5) to the options listed in paragraphs 1 and 2 and that all three must occur, as they are separated by the word ''and.'' If the system is isolated, as in paragraph 1, paragraphs 2–5 should not apply? After all there cannot be a discharge if the system is isolated. If employees are trained, as in paragraph 2, then all the following paragraphs should apply because the system is still energized and represents a potential hazard if activated. It appears that the word ''and'' was left off the end of paragraph 2. Recommend: Add the word ''and'' to the end of paragraph (b)(2). (Ex. 21–3).

OSHA agrees with Bath Iron Works that the proposed regulatory text was confusing because it combined ''and'' statements and ''or'' statements in a way that was difficult to follow. Therefore, the Agency has changed the regulatory text to clarify the requirements. Paragraph (b) of the final rule only includes the requirements for physical isolation of the system, or employee training, as discussed above. Paragraph

(b) now contains the provisions that were proposed as paragraphs (b)(1), (b)(2), and (b)(5). Paragraph (d) includes the actions that must be taken if activation of the system could result in a positive pressure in the protected space. Paragraph (d) now contains the provisions that were proposed as paragraphs (b)(3) and (b)(4). The remaining paragraphs of section 1915.506 have been renumbered consecutively.

Bath Iron Works stated:

It is not fully understood why work cannot be accomplished in a space that is protected by a fixed extinguishing system. The systems are installed to protect employees and equipment and there is ''work'' that does not pose a threat of an extinguishing system being activated. On the other hand, it is clearly understood that work that has the potential to activate an extinguishing system poses a real threat. If there is no threat why should any of the requirements in this section apply? The term ''work'' needs to be expanded to qualify it as ''work that has the potential to cause system activation'' or some other qualifying phrase. To expect the system to be physically isolated when routine work is to be performed in the space, without qualifying the type of work is unrealistic. Example: Prior to the vessel going to sea/sea trials all systems are operational, including fixed extinguishing systems. Typical work assignments at this stage of construction are to touch up paint that has been disturbed, or stencil piping systems. With all systems up and running, the protection of the fire extinguishing system is a safety feature that should not be eliminated. This section requires that it be deactivated, or that paragraphs 2 through 5 are complied with. Neither is feasible, nor do they provide additional protection to the employee''. * * * Revise paragraph (b) to further define the intent of work. 'Before any work that has the potential to cause systems activation * * * (Ex. 21–3).

NASSCO stated: ''The term 'any work' does not consider the work done during sea trials and other test activities that would not activate the system. We recommend that the paragraph read: 'any work that could activate the system' or 'any hot work.' '' (Ex. 22–14).

OSHA believes that this comment relates to the confusion caused by the construction of the proposed regulatory text. The Agency concludes that the qualification in paragraph (a) limits the applicability of this section only to systems that create hazards. In addition, the employer may conduct work with the system activated, so long as employees are trained pursuant to paragraph (b)(2)(i) of § 1915.506. As discussed above, the employer must take one of two courses of action. First, the employer could physically isolate the system or have other positive means to prevent the system from discharging. Second, the employer could train employees on the system's discharge and the associated hazards, and the evacuation alarms and routes.

If the employer chooses the second option, paragraph (b)(2)(i) of § 1915.506 requires employees to be trained to recognize fire extinguishing systems' discharge and evacuation alarms, and to recognize the appropriate escape routes. This training consists of making sure that employees, including the employees of contractors, recognize the discharge and evacuation alarms and escape routes in accordance with § 1915.508 of this subpart. Paragraph (b)(2)(ii) of § 1915.506, which was proposed as § 1915.506(b)(5), requires that employees be trained on the hazards of the fixed extinguishing system and the dangers associated with disturbing system components. Such components and equipment include piping, cables, linkages, detection devices, activation devices, and alarm devices. Employees in shipyards typically rig materials and equipment in and out of vessels and vessel sections using chain falls and come-alongs. Employees unaware of the dangers of disturbing system components could accidentally activate the system while in the process of rigging.

Sea and Dock Trials

Paragraph 1915.506(c) of the final rule requires employers to ensure that fire extinguishing systems are activated during sea and dock trials, which is a different requirement from proposed paragraph (c). The hazards that were addressed in the proposed paragraph (c) are now addressed in paragraphs (b) and (g). The proposed paragraph (c) addressed the risk of intentional or accidental activation of a manual system during sea or dock trials by requiring that all activation stations, whether remote or local, be secured under lock and key or an attendant posted. The intent was to prevent unauthorized persons access to the activation controls of a manual system because a manual system that is activated while employees are in the protected space may result in fatalities. During trials many persons are present who may not be completely familiar with the ship's operation, and OSHA believes that only authorized persons should have the authority and ability to manually activate the systems when employees are working in the protected spaces.

Bath Iron Works stated:

The intent of this paragraph needs to be clarified or the paragraph deleted. Does it pertain only to sea trials or are dock trials included? What constitutes work? Many spaces protected by fixed manual systems are manned spaces. The personnel assigned to these spaces perform ''work'' of various types. The space should be protected by a fire extinguishing system especially during sea trials. If employees are trained, as is required by proposed paragraphs (b)(2) and (b)(5), they will not activate the system unless it is necessary because they know the hazards associated with it. To keep the pull stations under lock and key prohibits immediate use if the need presented itself. If an unauthorized person wanted to activate the system, a lock is not going to stop him, nor is a guard. * * * Delete this entire paragraph as it does not increase the level of safety for employees and the hazard has been addressed in previous paragraphs. (Ex. 21–3).

Several commenters stated: ''This paragraph should be deleted from the proposed rule because it was written before paragraph (b) contained all of the sub-paragraphs as it currently does. Therefore, paragraphs (b)(1) and (2) provide the same coverage as paragraph (c).'' (Exs. 21–4; 21–5; 21–6; 21–7; 21–13; 22–2).

NGNN recommended that:

[O]SHA delete this paragraph. No Captain, Vessel Owner, or employer should put the safety of their vessel and personnel in peril by locking out the fire suppression system if it is the designated means of fire protection for the compartment. We have not experienced malicious activation of a fire suppression system and believe it sends the wrong message to lock out or otherwise prevent the use of a fire suppression manual activation device. If a system is to be disarmed, then it should be properly isolated, not by locking out the manual pulls. If it is determined that the risks of disarming the system outweigh the risks of leaving it armed then the manual pulls should be left available for use and workers should be trained on the proper actions to take in the event the system is activated. (21–8).

Several commenters stated:

While a vessel is on sea trials, the extinguishing system must remain operational and ready for activation to protect the vessel in the event of a fire. A tag would be sufficient to inform that personnel are in the space. Recommendation: 1915.506(c) be reworded 'Before any work * * *, the employer must ensure that during sea trials activation stations are tagged, informing personnel they are in the protected space.' '' (Exs. 21–10; 21–15; 21–16; 22–1; 22–6; 22–7 through 22–11).

OSHA agrees with these commenters, and has deleted the requirement to lock the manual fire suppression system. Although the intent of the proposal was to prevent accidental activation of the system, it also may have prevented employees from activating the system when needed in an emergency situation. In its place, OSHA has added a provision to require the systems to be operational during sea and dock trails, which is consistent with the views of

the commenters that these systems should always be available for use during trials. While on a sea trial, the shipyard fire response employees, or outside fire response, would not be able to access the vessel. Therefore, the extinguishing systems must be operational at all times. While OSHA does not agree that paragraph (b) alone provides sufficient protection from the hazard posed by manually activating a system while employees are within the protected space, OSHA has determined that the hazard is adequately addressed by the combined provisions of paragraphs (b) and (g). Paragraph (g) covers the use of fixed manual extinguishing systems, and is discussed below.

Doors and Hatches

Paragraph (d) of § 1915.506 was proposed as paragraphs (b)(3) and (b)(4). This section was included as a result of United States Coast Guard information about a casualty at sea. (67 FR 76233) In this incident, the chief engineer inadvertently discharged CO_2 into a space with an inward opening door. Members of the crew were unable to open the door until pressure in the space subsided. During that time, crewmembers trapped in the space were asphyxiated. As a result of this incident, the Coast Guard recommended that during inspections, CO_2 storage provisions and means of escape should be evaluated. The Coast Guard stated further that protective measures should be provided, such as making sure that doors open outward, that there are kick-out panels in doors or bulkheads, that doors are blocked open when the space is occupied, or that there are sufficient vent openings to the atmosphere. These recommendations are also recognized in the United States Coast Guard Marine Safety Manual, COMDTINST 16000.7, Vol. II (Ex. 17) and SOLAS 74/78 (Ex.18), which require outward opening access doors in CO_2 protected spaces aboard vessels.

Paragraph § 1915.506(d)(1) addresses the concerns about inward opening doors, hatches, scuttles, and other potential barriers that may close off escape routes as a result of system activation. The paragraph requires that, when employees are working in a space with inward opening doors, the doors must be removed, locked open, braced, or otherwise secured so they will not close and trap employees in the space. OSHA recognizes that placing a blocking device in a fire door is normally an unacceptable practice. However, in order to comply with the requirements of § 1915.506(d)(1), because of the hazard of asphyxiation, OSHA will allow a fire door to be blocked open, as long as the blocks are removed when the employees are no longer working in the protected space.

Paragraph (d)(2) of § 1915.506 (proposed paragraph (b)(4)) requires that all inward opening doors, hatches, scuttles, and other potential barriers to safe exit must be removed, locked open, braced, or otherwise secured so that they remain open and accessible for escape. This is to ensure that, in the event of the systems' activation that could result in a positive pressure in the protected spaces that all employees would be able to safely escape.

Great Lakes stated that:

> [T]o operate a vessel at sea with doors, hatches and scuttles in the closed position ensures the fire suppression system operates as designed, but violates the proposed rule. To operate the vessel with doors, hatches and scuttles locked in the open position complies with the proposed rule, but places the ship in grave danger should a fire break out. To isolate, lock out or otherwise render an extinguishing system inoperable while under way, or to keep all doors, hatches and scuttles locked open ensures that the agent will fail to reach its extinguishing concentration and hold time. Gaseous agents such as FM–200 (HFC–227ea) depend on achieving a specific design concentration in the protected space and maintaining that concentration until it is determined that the fire has been successfully suppressed. The inability to maintain the agent's design concentration (*e.g.*, open doors and hatches) can quickly lead to an uncontrollable fire, severe damage and a potentially life-threatening situation. (Ex. 22–5).

Several other commenters recommended that: ''1915.506 (b)(3) be changed by inserting the language ''[I]n the protected spaces, the emergency exit route doors, hatches or scuttles remain open and accessible,'' [and] 1915.506 (b)(4) insert the language: ''[I]n the protected spaces, the emergency exit route doors, hatches, scuttles or other potential barriers to safe exit must be removed. * *'' (Exs. 21–10; 21–15; 21–16; 22–1; 22–6; 22–7 through 22–11).

Bath Iron Works stated:

> OSHA needs to define positive pressure or clarify the intent of this paragraph. Many naval ships are designed to maintain positive pressure in spaces, including machinery spaces, via their ventilation system. Positive pressure is only an issue if it is great enough to prevent escape via inward opening doors. To mandate that these be removed, or locked open, prevents the halon fire extinguishing system from extinguishing the fire because compartment integrity has been compromised. A greater hazard has been created in complying with the standard. * * * Revise the paragraph to show that the requirements apply only if the positive pressure is great enough to prevent the opening of inward opening doors. This can be achieved by the following revision: ''If systems activation could result in a positive pressure great enough to prevent the opening of doors in the protected spaces, all inward opening doors, hatches, scuttles * * *.'' (Ex. 21–3).

The purpose of this section is to protect employees who might be exposed to hazardous conditions when they are trapped by doors that are sealed by positive pressure within the space. If the fire suppression system will not create a pressure sufficient to seal an inward opening door, the paragraph does not apply. This section specifically protects the lives of employees working in protected spaces while a fixed extinguishing system is activated. For example, employees working in a shaft alley are in a confined space. Should the alarm be activated, the door(s) will shut automatically, creating a trapping situation for those employees. Although some vessels may have an escape hatch, not all vessels have such hatches. In this circumstance, employees must be trained to block open those doors when entering the space to conduct work. Should the system be activated, the alarm will sound and the employees will leave the space immediately. Upon their exit, they should remove the blocks and shut the door behind them, thus allowing the fire suppression system to perform as designed. By training employees to block those doors open, the trapping hazard is then abated. The Coast Guard, the Committee, and OSHA agree that this section will save lives.

Testing the System and Conducting System Maintenance

Paragraphs (e) and (f) (formerly (d) and (e)) of § 1915.506 address system testing and system maintenance operations. Testing and maintenance have been demonstrated to be the most likely causes of accidental system activation. The Coast Guard currently requires fixed fire extinguishing systems to be disconnected when undergoing any testing or maintenance. The need for these requirements is demonstrated clearly by the fatalities that occurred while testing the fixed system on the M/V CAPE DIAMOND mentioned above. As a result of this incident, the Coast Guard recommended that personnel in spaces protected by CO_2 systems be evacuated during testing, unless suitable safeguards are instituted, such as isolating the CO_2 supply from the protected space or providing personnel with self-contained breathing apparatus (SCBA).

OSHA proposed to both physically isolate the system and to evacuate non-essential personnel during testing because testing of such a system

typically results in alarm activation and could result in a discharge of the extinguishing agent, putting any employees in the space in danger of death or injury.

Bath Iron Works stated:

The paragraph mandates both ''physically isolating'' the system and evacuation of employees not directly involved in ''testing the system.'' The standard does not explain what ''testing the system'' means. Judging from the summary and explanation the concern is during a system's concentration test when extinguishing media is actually discharged into the space so the concentration can be measured. This really confuses the intent of this paragraph for the following reasons. (1) You cannot test a physically isolated system because the definition of physically isolated in this standard prevents the system from being hooked to a supply, (2) If the system is physically isolated there is no potential for discharge so evacuation is unnecessary and (3) If there was a potential for the discharge of extinguishing media into a space, then all personnel should be evacuated not just those, ''not involved in the testing.'' This paragraph is extremely confusing. * * * Assuming that the committee's intent is to protect employees during a concentration test, revise the paragraph to read ''The employer will ensure that the protected space and affected adjacent spaces are evacuated during system's testing that could result in the discharge of extinguishing media into the space.''

Note: There is no need to specify vessels and vessel sections as it is the title of this part. (Ex. 21–3).

NGNN commented:

Does this mean that it is acceptable for personnel directly involved in testing to remain in the compartment during actual discharge? * * * Delete the words, ''not directly involved in testing it.'' The modified paragraph will then read, ''The employer must make sure that the system is isolated and that all employees are evacuated from the protected spaces when levels of extinguishant can prevent self rescue, before testing any fixed extinguishing system'' (Ex. 21–8).

These commenters are correct in noting that there are two types of tests that are performed on automatic fire extinguishing systems. One method involves the total release of extinguishing medium into a space (total flooding), while the other does not. As noted by the commenters, the proposed rule did not address the hazards caused by each type of test, making the proposed rule confusing, and providing inadequate protections for testing involving total flooding. To make the requirement clearer, and to make sure that appropriate protections are in place for employees who may be exposed to hazards by each type of test, OSHA has revised paragraph (e) to address both types of testing.

Paragraph § 1915.506(e)(1) addresses the first test in which the system is intentionally activated to determine whether or not it will introduce sufficient fire extinguishing material to be effective. In this case, the final standard requires the employer to ensure that all employees are evacuated from the space and that no employees remain in the space during the discharge, as recommended by the commenters. OSHA is requiring that, after the discharge of the extinguishing medium into the space, the employer must ensure that the atmosphere is safe for employees to reenter. OSHA is requiring the employer to follow the requirements found in § 1915.12, *Precautions and the order of testing before entering confined and enclosed spaces and other dangerous atmospheres.* OSHA is adding these requirements to eliminate confusion. Paragraph § 1915.506(e)(2) addresses the second, and more common type of test, which involves the use of air or nitrogen as a replacement for the extinguishing medium so that sensors, valves, and heads can be tested individually for their proper operation. This type of testing is commonly performed during ship repair and maintenance work. To perform the test, technicians physically isolate the system's extinguishing medium and then activate individual components to verify proper function. Fire alarms are activated during this testing, and other employees in the area will not know if the alarm is part of the test, or if it is a real alarm. Therefore, the final standard requires the employer to physically isolate the system to assure that the system does not introduce extinguishing medium into the space, and to assure that any employees not directly involved in the testing are evacuated. This evacuation is a reasonable safety precaution because a real alarm may be ignored as a false or nuisance alarm by non-essential employees until it is too late to evacuate the space safely.

Paragraph (f) (proposed paragraph (e)) requires that the employer ensure that the system is physically isolated before conduction maintenance on a fixed extinguishing system. OSHA did not receive comment on this paragraph and has included it in the final rule without revision.

Using Fixed Manual Extinguishing Systems for Fire Protection

In paragraph (g) (formerly paragraph (f)) of § 1915.506, OSHA addresses the hazards associated with using fixed fire extinguishing systems by requiring that employees be trained and designated as necessary to operate and activate the system properly. Further, OSHA requires that all employees be evacuated from spaces, and accounted for before the discharge of the system. As described in the preamble to the proposed rule, these requirements are necessary to prevent fatalities from overexposures to carbon dioxide (67 FR 76234).

Paragraph (g)(1) requires that only authorized employees be allowed to activate fixed manual extinguishing systems. This is based on the proposed requirement that would have required employers to lock out the manual pull stations or post an attendant at them. While OSHA determined that the systems should not be locked out, additional regulatory language was needed to clarify that not all employees should be able to activate a manual fixed extinguishing system. An authorized person must be available to activate the system, if necessary, following the evacuation of the employees who are working in the space. The authorized person or persons should be the only person to activate the system. This will alleviate the possibility of someone activating the system who has not been trained, or does not know what hazards are involved with the activation of the system.

OSHA is not instructing the employer on who should be an authorized person, or on the number of authorized persons they must train. These are determinations that need to be made by each employer. Authorized employees are required to be trained. Therefore, the employer must make the determination of the number of employees that will be authorized to activate the system. Should an employer desire to have all employees designated as authorized, those employees must be trained. Conversely, an employer may designate foremen, or senior employees, as authorized, and train those few employees.

Paragraph (g)(2) requires that authorized employees be trained to operate fixed manual systems when the employer expects these systems to be relied on in the event of a fire. This was proposed as paragraphs (f)(1), and OSHA has modified this provision to ensure that only authorized employees are trained to operate and activate the system. As proposed, the provision allowed for employees to be trained and designated. OSHA wanted to ensure that only authorized employees, rather then designated, would have access to activate the system. NGNN stated:

The paragraph could be interpreted to require us to designate and train our

employees to operate ship's fixed fire extinguishing systems. Current work practices on U.S. Navy vessels do not permit this action by non-Navy personnel. Responsibilities for fire response are established via contract, memorandum of understanding or other means depending on the stage of construction or repair. Similarly, other employers at a host site may not have authority to operate a particular fire extinguishing system, but should ensure their personnel understand their required actions in the event of a fire. Recommend: 1915.506 (f)(1) be changed to read as follows: ''Employees are instructed on the appropriate actions to be taken in the event of fire or activation of the fire extinguishing system within the compartment. (Ex. 21–8).

OSHA does not agree with this commenter's suggested revision. The employer is responsible for making sure that someone is present who is designated to operate the manual fire suppression system and is trained to do so safely. Not all employees have the right or authorization to activate a system. The designation of employees to activate the system should come from an agreement with the shipyard, the vessel owner, and the captain to designate a person or persons. The person or persons who are selected need to be trained to operate and activate the system. In addition, Paragraph (g)(3) requires that all other employees need to be evacuated from the protected spaces and accounted for before the system is activated.

Paragraph (g)(3) of § 1915.506, proposed as (f)(2), requires that the protected space be evacuated completely and all employees accounted for before discharge of the fixed manual extinguishing system. OSHA received no comments on this provision, and it is included in the final rule as it was proposed.

Section 1915.507 Land-Side Fire Protection Systems

This section consolidates various existing requirements as well as providing references to current applicable national consensus standards. (See the proposal to the NPRM for a discussion of existing requirements (67 FR 76235).

Employer Responsibilities

Under paragraph (a) of § 1915.507, the employer must ensure that all fixed and portable fire protection systems installed to meet a particular OSHA standard comply with the appropriate requirements of this section. The provisions in this section do not apply to fixed or portable fire protection systems the employer has installed to meet requirements other than OSHA's, such as local requirements, or ships systems.

Portable Fire Extinguishers and Host Systems

In § 1915.507(b), OSHA regulates the use of portable fire extinguishers and hose systems. By incorporating by reference NFPA 10–1998 Standard for Portable Fire Extinguishers (Ex. 19–1) in paragraph (b) of this section, the employer may replace up to one-half of the required complement of fire extinguishers by uniformly spaced 1-inch (3.8 cm) hose stations. If the employer chooses to use hose systems, then the employer must meet the recommendations of NFPA 14–2000 Standard for the Installation of Standpipe, Private Hydrant, and Hose Systems (Ex. 19–12). This is consistent with current OSHA practice under 29 CFR 1910.157 and 1910.158. The incorporation by reference in § 1915.507(b)(1) will permit some flexibility in offering protection for incipient stage fires.

In paragraph (b)(2) of this section, OSHA is allowing the employer to use hose lines attached to Class II or Class III standpipe systems in place of portable fire extinguishers if those hose systems meet the applicable selection, installation, inspection, maintenance, and testing requirements of NFPA 14–2000 Standard for the Installation of Standpipe, Private Hydrant, and Hose Systems (Ex. 19–12).

Several commenters were concerned about incorporating NFPA standards by reference:

This section requires installation, maintenance and testing in accordance with National Fire Protection Association (NFPA) standards. NFPA is not required to seek non-member participation in the development of standards. Also, these standards are not available free of cost to employers. These consensus standards have been a problem for the shipyard community because once they are incorporated by reference; the NFPA can change or impose a new regulation on industry without industry participation in the process. If OSHA incorporates these standards by reference, OSHA should provide the version that will be enforced to the regulated community, and ensure public participation in additional rulemaking that may result from changes to the standards (Exs. 21–4; 21–5; 21–6; 21–7; 21–13).

Reliance on national consensus standards such as those referenced here is a U.S. government policy. The U.S. Office of Management and Budget in Circular A–119 directs federal agencies to use voluntary consensus standards in lieu of government-unique standards except where inconsistent with law or otherwise impractical. The NFPA also includes the public during the process of developing new codes and standards, and when NFPA standards are revised. OSHA incorporates consensus standards by reference only in the notice and comment rulemaking process, such as here. OSHA proposed incorporation, received public comment, analyzed the comments, and only then determined if the specific NFPA consensus standard would be incorporated.

NFPA does not provide free copies of their standards to the public. They must be purchased. Due to legal restrictions, OSHA cannot publish another agency or association's standards when OSHA incorporates them by reference into an OSHA standard. However, when OSHA does incorporate by reference, that particular standard or code is submitted to the **Federal Register** and to the OSHA Docket Office. As set forth in § 1915.5, the materials may be purchased from the organization that publishes them, and are available for inspection at the **Federal Register**, the OSHA Docket Office, or in OSHA regional offices. Apart from minor editorial changes, paragraphs (a) and (b) in § 1915.507 are carried forward unchanged in the final standard.

General Requirements for Fixed Extinguishing Systems

Under § 1915.507(c), OSHA addresses the general requirements of fixed extinguishing systems the employer must install to meet a particular OSHA standard. In paragraph (c)(1), OSHA requires the use of fixed extinguishing systems that have been approved by a National Recognized Testing Laboratory (NRTL). This is consistent with OSHA's current practice of requiring that all fire protection equipment and systems are approved for their purpose and design by a NRTL.

In paragraph (c)(2) of § 1915.507, OSHA requires that employers notify employees and take the necessary precautions to protect employees when a fire extinguishing system becomes inoperable. Precautions must remain in place until the system is working again.

In paragraph (c)(3) of § 1915.507, OSHA also requires that a qualified technician or mechanic repair any inoperable system. This requirement is consistent with current fire protection standards (29 CFR 1910.160 and NFPA 12–2000).

OSHA requires in § 1915.507(c)(4) that when an area remains hazardous to employee safety or health as a result of the discharge of an extinguishing agent, effective safeguards must be provided to warn employees not to enter the discharge area. This is consistent with the requirements in § 1910.160(b). Should an employee need to enter this

discharge area for emergency reasons, personal protective equipment must be provided. An emergency could include the rescue of another employee or to shut down equipment or processes to ensure that additional conditions do not arise.

This paragraph is necessary because some systems are designed to discharge extinguishing agents in concentrations greater than is safe for humans. These systems have the potential to create a hazard to employees and need special consideration and control. OSHA has incorporated the requirements in § 1910.160(b) in this final standard, recognizing that the hazards of such systems need to be identified and controlled in shipyard employment. This is particularly true of systems using carbon dioxide and some of the newer Halon replacement agents. OSHA is also adding a sentence to this paragraph directing the reader to § 1915.12, *Precautions and the order of testing before entering confined and enclosed spaces and other dangerous atmospheres*, for additional requirements for entry into dangerous atmospheres created by the discharge of certain extinguishing agents.

In paragraph (c)(5) of § 1915.507, OSHA requires the employer to post hazard warning or caution signs at both the entrance to and inside of areas protected by fixed extinguishing systems that could discharge extinguishing agents in concentrations that are known to be hazardous to employee safety or health. This is consistent with paragraph (b)(5) of 29 CFR 1910.160.

In § 1915.507(c)(6), OSHA requires the employer to select, install, inspect, maintain, and test all automatic fire detection systems and emergency alarms according to NFPA 72–1999, National Fire Alarm Code (Ex. 19–13). Several technological advancements have occurred in both fire detection and fire alarm technology in recent years. Incorporating NFPA 72–1999 as the OSHA standard for designing and installing all fire detection and alarm systems will provide employees with protections consistent with protections provided by other codes and standards used by local authorities having jurisdiction or other building codes. No comments were received on paragraph (c), and OSHA is carrying it forward in the final standard.

Fixed Extinguishing Systems

In § 1915.507(d), OSHA requires that the selection, installation, maintenance, inspection, and testing of specific types of fixed fire extinguishing systems meet the requirements of particular NFPA standards. The Agency received no comments on this paragraph and has adopted it in the final standard.

In paragraph (d)(1), OSHA requires that standpipe and hose systems in land-side facilities follow the requirements in NFPA 14–2000 Standard for the Installation of Standpipe, Private Hydrant, and Hose Systems (Ex. 19–12).

In § 1915.507(d)(2), OSHA is incorporating by reference NFPA 13–1999 Standard for the Installation of Sprinkler Systems (Ex. 19–14); NFPA 750–2000 Standard on Water Mist Fire Protection Systems (Ex. 19–15); and NFPA 25–2002 Standard for the Inspection, Testing, and Maintenance of Water-based Fire Protection Systems (Ex. 19–16), to address the installation of OSHA-required automatic sprinkler systems in land-side facilities. NFPA 13–1999 and NFPA 750–2000 provide, respectively, requirements for automatic sprinklers and automatic mist systems. NFPA 25–5002 has maintenance and inspection requirements for both of these water systems.

In paragraph (d)(3) of § 1915.507, OSHA is incorporating by reference several NFPA standards with specifications for fixed extinguishing systems that use water spray or foam for the extinguishing agent. These include the NFPA 11–1998 Standard for Low-Expansion Foam (Ex. 19–17); NFPA 11A–1999 Standard for Medium- and High-Expansion Foam Systems (Ex. 19–18); and NFPA 15–2001 Standard for Water Spray Fixed Systems for Fire Protection (Ex. 19–19). In paragraph (d)(4) of § 1915.507, OSHA is incorporating by reference NFPA 17–2002 Standard for Dry Chemical Extinguishing Systems (Ex. 19–20) for fixed extinguishing systems using dry chemical as the extinguishing agent.

In paragraph (d)(5) of § 1915.507, OSHA is incorporating by reference the current edition of NFPA standards that address fixed extinguishing systems using gas as the extinguishing agent. Specifically, OSHA is referencing NFPA 12–2000 Standard on Carbon Dioxide Extinguishing Systems (Ex. 19–21); NFPA 12A–1997 Standard on Halon 1301 Extinguishing Systems (Ex. 19–22); and NFPA 2001–2000 Standard on Clean Agent Fire Extinguishing Systems (Ex. 19–23).

OSHA recognizes that the fire-extinguishing agent Halon 1301 is being phased out because of environmental concerns. However, for economic reasons, existing Halon 1301 systems may remain in service until such time as an alternative agent replaces them. Therefore, OSHA is promulgating the requirements in § 1915.507(d)(5) for the design and installation of Halon 1301 systems to ensure employee safety. For the systems that will replace Halon, OSHA is requiring that the employer meet NFPA 12–2000 Standard on Carbon Dioxide Extinguishing Systems (Ex. 19–21) or NFPA 2001–2000 Standard on Clean Agent Fire Extinguishing Systems (Ex. 19–23) for their design and installation. No comments were received on paragraph (d), and OSHA is carrying it forward in the final standard.

Section 1915.508 Training

Employee training is a critical element of an employer's program in combating the hazards of fire in shipyard employment. The proposed standard placed a specific emphasis on hazard recognition, fire watch, and fire response. This final standard has been reformatted and edited to provide clearer guidance for training employees who are required to evacuate during an emergency, expected to fight an incipient stage fire, designated as fire watch workers, or designated as fire response employees.

First, all employees need training on alarms and proper evacuation procedures. In some cases, employers may want some or all employees to evacuate the work area during a fire emergency and not respond to the fire, so limited training is needed. Second, the employer may decide to designate certain employees to fight incipient stage fires. For example, an employer may designate and train all shift supervisors, or security personnel, on fighting incipient stage fires, while the remaining employees evacuate the work area. These employees need basic knowledge of fire extinguishing equipment and the hazards they may face. Third, fire watch workers who are more likely to actually fight an incipient stage fire require additional training to allow them to perform this duty safely. Finally, fire response employees may be called upon to fight fires that have advanced beyond the incipient stage, and need advanced firefighting knowledge to perform this inherently dangerous work. This section has been reformatted and renumbered from the proposed standard to reflect the additional training requirements required for each type of employee.

Regardless of the amount of training that employees will receive, they must be trained within the time restrictions that are required in paragraph (a). Proposed paragraph (a) required that affected employees be trained when they first start working, or as necessary to maintain proficiency on the following: (1) The general principles of

using fire extinguishers or hose lines, the hazards involved with incipient firefighting, and the procedures used to reduce these hazards; (2) the hazards associated with fixed and portable fire protection systems that they may use or to which they may be exposed during discharge of those systems; (3) the activation and operations of fixed and portable fire protection systems provided for their use in the workplace; (4) the emergency alarm signals, including system discharge and employee evacuation alarms; and (5) the primary and secondary evacuation routes they must use in the event of a fire in the workplace.

In the final standard, this paragraph has been divided into three new paragraphs. The final requirement in paragraph (a) requires that all employees be trained within 90 days from the effective date of this standard for employees currently working, upon initial assignment for new employees, and when necessary to maintain proficiency for employees previously trained. Under the proposed language, it was not sufficiently clear that the training requirements apply to both current and new employees. This final language is consistent with § 1915.502(c) to provide training for current and new employees. The requirement to train and retrain selected employees is based upon the requirements of 29 CFR 1910.157.

Employee Training

Proposed paragraphs (a)(1) through (a)(5) have been divided into two new paragraphs and renumbered. Proposed paragraphs (a)(4) and (a)(5) are now required for all employees in paragraph (b), regardless of their level of participation in fire response. Paragraph (b) requires that all employees be trained on the emergency alarm signals, including system discharge alarms and employee evacuation alarms, and the primary and secondary evacuation routes. OSHA has determined that all employees must be trained on these two basic fire safety issues to protect lives.

In proposed paragraph § 1915.508(a)(5), now paragraph (b)(2), regarding training on the primary and secondary evacuation routes a fire watch employee must use in the event of a fire in the workplace, OSHA proposed a note stating that vessels and vessel sections may not always have a secondary evacuation route (67 FR 76237). In the final rule, in paragraph (b)(2), OSHA has incorporated this note into the regulatory text and modified it to read: ''While all vessels and vessel sections must have a primary evacuation route, a secondary evacuation route is not required when impracticable.'' This change reflects OSHA's view that multiple evacuation routes provide a greater degree of safety for employees, and that the employer must provide a secondary route unless it is impracticable. The change is also compatible with the requirements of 29 CFR 1910.36, which requires two or more exit routes for buildings and other structures at the shipyard, with certain exceptions. Similar to the § 1910.36 standard, OSHA recognizes that there are circumstances where a second evacuation route is not practicable. In those situations, the employer must train employees only on the primary evacuation route. This change remains consistent with the recommendations of the Committee to recognize the uniqueness of vessels and vessel sections in comparison to buildings and other land-side structures, while providing greater clarity on the need for safe evacuation procedures.

Additionally, comments received on paragraph (a) stated: ''This section should include an additional paragraph, which allows for a combined training session that incorporates all emergency training into one session'' (Exs. 21–4; 21–5; 21–6; 21–7; 21–13; 22–2). The employer is already free to incorporate all training into one session, or to train all employees at the same time as long as all requirements are met. This requirement is performance-oriented. OSHA indicates what training is required and allows the employer to decide the best way to comply with all of the requirements,

Additional Training Requirements for Employees Expected To Fight Incipient Stage Fires

Proposed paragraphs (a)(1) through (a)(3) have been moved and are now included in the training requirements for those employees designated to fight fires in paragraph (c). These employees will be designated by the employer as employees who attempt to extinguish an incipient stage fire. Paragraph (c)(1) requires that these employees be trained on the hazards involved with incipient stage firefighting, and the procedures used to reduce these hazards, as well as the principles of using fire extinguishers or hose lines. In addition, paragraphs (c)(2) and (c)(3) require these employees to be trained on the hazards associated with fixed and portable fire protection systems that they may use or to which they may be exposed during discharge of those systems, as well as the activation and operation of fixed and portable fire protection systems that the employer expects them to use. Proposed paragraphs (a)(1) through (a)(3) have been carried forward in the final rule.

Additional Training Requirements for Shipyard Employees Designated for Fire Response

These requirements were proposed as paragraphs (b)(1) through (b)(10), and have been renumbered as (d)(1) through (d)(10). In § 1915.508(d), OSHA addresses the additional training requirements for fire response employees and the training requirement that will replace paragraph (c) of § 1915.52. Fire response employees may be exposed to many hazards associated with fire suppression, including heat, flame, smoke, explosion, structural collapse, or hazardous materials. It is important that these employees are provided with training specific to what they might encounter. No comments were received on proposed paragraphs (b)(1) through (b)(8), and they are carried forward renumbered as (d)(1) through (d)(8).

In paragraph (d)(1) of § 1915.508, OSHA requires that the employer have a written training policy stating that fire response employees must be trained and capable of carrying out their duties and responsibilities at all times. This is consistent with the requirements found in 29 CFR 1910.156 and NFPA 1500–2002 (Ex. 19–5).

In paragraph (d)(2), OSHA requires the employer to keep written standard operating procedures that address anticipated emergency operations and to update these procedures as necessary. Emergency operations are activities, such as rescue, fire suppression, and emergency medical care that are performed by a fire response organization. In some incidents, these emergency operations may include special operations, such as hazardous materials response (HAZMAT), HAZMAT release mitigation, standby for flight operations, protection of structures exposed to nearby off-site fires, or mutual-aid at other workplaces. Written standard operating procedures are training tools and represent the best practice in the industry. This is consistent with the language in paragraphs 3–1.5 and 3–1.8 of NFPA 1500–2002 (Ex. 19–5).

In § 1915.508(d)(3), OSHA requires the employer to review fire response employee training programs and hands-on sessions before they are used to make sure that fire response employees are protected from hazardous training conditions. This should help to prevent the occurrence of training accidents resulting from unexpected events such as flare-ups, collapses, entrapments, and stress-induced injuries.

In paragraph (d)(4) of § 1915.508, OSHA requires all fire response employees to be adequately trained to carry out their duties and responsibilities under the employer's standard operating procedures. This training program must provide the information necessary to ensure that these employees are competent to respond appropriately to a fire. For example, the fire response employee must know how to respond to a fire on board a vessel, where the pier hook-ups are located, how to gain access to the vessel, and how to determine the location and type of fire within the vessel.

In § 1915.508(d)(5), OSHA requires the employer to train new fire response employees before they engage in emergency duties so that they can work safely and effectively at a fire scene. This language is consistent with paragraph 3–1.3 of NFPA 1500–2002 (Ex. 19–5).

In paragraph (d)(6) of § 1915.508, the employer must provide training for firefighters at least quarterly on the employer's written operational procedures. Because of the complexity of hazards involved in shipyard firefighting, the quarterly training requirement is appropriate. In addition, most fire response operations in shipyard employment, whether on a vessel or in land-side facilities, go beyond the incipient stage and most likely involve an interior attack.

In paragraph (d)(7) of § 1915.508, OSHA requires that all fire response operations training be conducted by qualified instructors. This language is consistent with paragraph 5.2.11 of NFPA 1500–2002 (Ex. 19–5).

In § 1915.508(d)(8), OSHA requires any live firefighting training exercises to follow NFPA 1403–2002 Standard on Live Fire Training Evolutions (Ex. 19–24). This is consistent with paragraphs 4.9.4 and 5.2.10 of NFPA 1500–2002 (Ex. 19–5).

In paragraph (d)(9) of § 1915.508, the employer must provide semiannual drills that cover site-specific operations, occupancies, buildings, vessels and vessel sections, and fire-related hazards, according to the employer's written operational procedures. The semiannual requirement for drills is consistent with the recommended frequency found in paragraph 5.3 of NFPA 1500–2002 (Ex. 19–5).

Bath Iron Works stated:

> OSHA does not state that an actual fire response qualifies as meeting the requirement of a drill. To maintain consistency with 29 CFR 1915.12(e) which allows an actual confined space rescue to qualify as meeting the training requirements the paragraph should be revised. Recommendation: Add the following text: ''Conduct semi annual drills unless the team performs an actual fire response during the 6 month period.'' (Ex. 21–3).

OSHA disagrees with Bath Iron works and is convinced that fire responses are not adequate substitutes for training drills. A training drill is intended to be used for assessing and improving operational or deployment procedures. Actual fires provide useful learning experiences, and it is usual and customary to evaluate fires for this purpose, but they do not provide the same training opportunity as drills. When an actual alarm is sounded and the shipyard fire department responds, the on-scene command is coordinating the scene and ensuring that firefighters respond safety and effectively. They cannot effectively observe, document, and evaluate the response at the same time. Drills are used for the sole purpose of training, while fire response is focused on saving lives and property. This issue was discussed during the negotiated rulemaking process and Committee members had varying positions. OSHA was convinced by the position of most of the Committee members that the rule should require semiannual drills without regard to actual fire responses for the above reasons. The Agency has not received compelling reasons to change its position. Therefore, this paragraph has not been changed for the final standard.

In paragraph (d)(10) of § 1915.508, OSHA prohibits the employer from using smoke generating devices that could create a dangerous atmosphere in training exercises. This includes training done on vessels and vessel sections as well as in buildings and other structures. This requirement is consistent with paragraph 8.3.2 of NFPA 1500–2002 (Ex. 19–5). Where the employer must simulate emergency conditions that require smoke generation, smoke-generating devices that do not create a hazard must be used. OSHA received no comments on proposed paragraph (b)(10), and it has been carried forward in the final rule as (d)(10).

Additional Training Requirements for Fire Watch Duty

Proposed paragraph (c) of § 1915.508, which has been renumbered as paragraph (e), sets forth the additional training requirements for any person assigned to fire watch duty. In shipyard employment, some employers hire contract workers as needed for the sole purpose of fire watch. The employer is ultimately responsible for ensuring that these fire watches are trained in accordance with § 1915.508(f). One way to do this is for the employer to have a written evaluation of the contractor's training program that the employer can review and thereby ensure compliance with the OSHA standard. Again, OSHA wants to make clear that it is the employer's responsibility to make sure that all fire watches are trained.

In paragraph (e)(1) of § 1915.508, OSHA requires the employer to make sure the fire watch has been trained: (i) Before beginning the fire watch; (ii) when there is a change in operations that presents a hazard for which the worker has not been previously trained; (iii) when the employer determines that the fire watch employee needs to be trained; and (iv) annually.

Marine Chemist Services, Inc. submitted the following comment on the training of fire watches:

> Unlike the requirement in paragraph 1915.508(b)(7) Training requirements for shipyard employees designated for fire response to ''(u)se qualified instructors to conduct the training'', there is no similar requirement for fire watch training instructors. As a result, literally anyone will be able train fire watches. Consequently, the fire watch training program will contain as much or as little detail as the trainer is knowledgeable (through education and experience) and/or has time. * * * Recommendation: add the words ''in an approved fire watch training course taught by a qualified instructor'' (Ex. 22–12).

OSHA agrees with this comment. Although most shipyard employers would use a qualified instructor, one could interpret this standard incorrectly, and employees could be trained incompletely or inadequately. Therefore, OSHA is changing the regulatory text of § 1915.508(e)(1) to read: ''The employer must ensure that each fire watch is trained by an instructor with adequate fire watch knowledge and experience to cover the items as follows:'

Marine Chemist Services also stated:

> It is agreed that a fire watch's knowledge and understanding must be adequate in order for him or her to properly perform fire watch duties; but so, too, must be one's skill. Even the requirement to extinguish live fire scenarios seems to suggest the importance of one's skill, both in terms of physical (*e.g.* strength) and mental (*e.g.* remaining calm) abilities. Therefore, knowledge and skill and understanding are needed here. Recommendation: insert ''skill'' as follows: Whenever the employer has reason to believe that the fire watch's knowledge, skill or understanding of the training previously provided is inadequate. (Ex. 22–12).

OSHA agrees that skills are an important component of the training requirements, as are the knowledge and understanding of the duties to be

performed, and has included the word ''skills'' in § 1915.508(e)(1)(iii) as suggested by Marine Chemist Services.

Under paragraph (e)(1)(iv) of § 1915.508, employers must retrain fire watches annually. Annual training is an industry practice. In addition, annual training is already required by Navy contracts throughout the country.

NAVSEA stated: ''Recommend modifying this requirement as follows: 'Annual refresher training to include discussion of the types of fires seen recently in operations that the fire watch may encounter in the next year.' '' (Ex. 22–15). OSHA agrees that it would be prudent for any shipyard that has an incident to discuss the incident during the annual retraining, and encourages shipyards to do so if the discussion will add to the knowledge and understanding of fire watches. However, OSHA has concluded that the employer is in the best position to determine if a discussion of past fires would always be useful or necessary for its fire watch workers. Therefore, OSHA does not believe modification of this provision is necessary and has not modified the standard.

Paragraph (e)(2) of § 1915.508 contains 12 items the employer must include in fire watch training. The training includes how to anticipate and be aware of the hazards that may be faced while performing fire watch duties, such as limited egress or possible changes in atmospheric conditions. To recognize the adverse health effects that may be caused by exposure to fire, employees have to be trained under OSHA's Hazard Communication Standard, 29 CFR 1910.1200. Workers need to be knowledgeable about fire prevention practices so they can correctly react to changes in the hot work environment that introduce hazards not identified at the start of hot work. Examples are deterioration of housekeeping or introduction of combustible or flammable materials.

Paragraph (e)(2)(i) of § 1915.508 requires the employer to train a fire watch on the basics of fire behavior, classes of fires, extinguishing agents, stages of fire, and methods of extinguishment. The basics of fire behavior usually include the definition of the fire triangle and tetrahedron as set forth by NFPA 1001–1997 Standard for Fire Fighter Professional Qualification (Ex. 19–25). Extinguishing agents commonly used in shipyard employment are dry chemicals, water, and CO_2. Methods of extinguishing require removing one or more of the following: heat (ignition), oxygen, fuel, or chemical chain reactions. OSHA received no comments on this paragraph, and it is carried forward as proposed.

Paragraph (e)(2)(ii) requires that each fire watch be trained using live fire scenarios whenever allowed by law. The training exercise would be a controlled burn and would teach the trainee the proper way to approach the fire. There are different requirements and restrictions across the country in this regard.

Numerous comments were received on this issue.

> We believe it is unnecessary to create a hazard with a live fire exercise, employees can demonstrate proper operation of a fire extinguisher with other equipment. Use of charged extinguishers and live fires is costly and may add little reality to the training. Employers should have the option to use alternative instructional methods and equipment for fire watches. (Exs. 21–10; 21–15; 21–16; 22–1; 22–6; 22–7 through 22–11).

In addition, National Steel and Shipbuilding Company stated: ''Live fire scenarios are not required to demonstrate the ability to use a fire extinguisher. Employees can be effectively trained without the need to extinguish live fire scenarios. We recommend that the requirement be for live fire scenarios be removed.'' (Ex. 22–14).

NGNN recommended that this paragraph be deleted:

> [P]aragraph (c)(2)(viii) requires the employer to instruct employees assigned to fire watch on how to select and use fire extinguishing equipment and this is sufficient. * * * Our current practice of providing practical hands-on use of the various extinguishers without the presence or a live fire has proven effective at our facility as evidenced by our fire safety record described in our cover letter. * * * We strongly encourage OSHA to use performance-oriented language, such as in paragraph (c)(2)(viii), rather than prescriptive language in this regard. (Ex. 21–8).

There are some localities that prohibit burning due to smog or clean air provisions. If this is the case, then live fire training should not be used. If this is not the case, live fire scenarios must be used and employees are expected to use fire extinguishers on such fires. Learning the different types of fires and appropriate fire extinguishers is more effective when live fire scenarios are used. In addition, fire watches need to know and be able to demonstrate that they can adequately use a fire extinguisher to extinguish a fire. The Committee was unanimous in its support of live fire training as the most effective means to train fire watches for their duties, because it provides the best simulation of actual firefighting technique. The Agency agrees that this is the case, and finds the comments that live fire training is unnecessary unpersuasive. Therefore, this provision is being included in the final standard as proposed. The only exception is for situations where a state or local law prohibits open burning and the employer is unable to obtain an exception for the training. In this case, the Agency does not wish to put the employer in the position of violating a local fire rule to comply with the OSHA standard.

Paragraphs (e)(2)(iii), (iv), and (v) require, respectively, that employees who stand fire watch duty must be knowledgeable of the adverse health effects that may be caused by exposure to fire, the physical characteristics of the hot work area, and the hazards associated with fire watch duties.

Paragraphs (e)(2)(vi) and (vii) of § 1915.508 require training on personal protective equipment (PPE), including what PPE is appropriate in a particular situation, as well as how to use it. A fire watch may need the same or different items of PPE from that used by a hot worker. The fire watch could be assigned to an isolated or confined space and, therefore, would need the additional protection that is required under other sections of Part 1915.

Paragraph (e)(2)(viii) of § 1915.508 requires that an employee who stands fire watch duty be trained to select and operate fire extinguishers and fire hoses likely to be used by the fire watch. As in the case of fire extinguishers, whenever a fire watch is expected to use a fire hose, the fire watch must be trained in its use. A fire watch who has been trained with a fire extinguisher but not a fire hose does not necessarily understand how to use a fire hose. Fire watches need targeted training if they may have to deal with these different types of equipment within their shipyard employment.

The Agency requires that a fire watch be trained to select and operate the different types of fire extinguishers and fire hoses likely to be used by fire watches in the area. These requirements are similar to those found in 29 CFR 1910.157 in which OSHA requires the employer to train any employee who has been designated to use portable fire extinguishers (or, as stated in paragraph (e)(2)(viii) of this section, fire hoses), and for these employees to be familiar with the general principles of fire extinguisher use and the hazards of fighting incipient stage fires. OSHA does not believe that adopting this training requirement from Part 1910 imposes any new burden on shipyard employers beyond what currently exists.

Paragraph (e)(2)(ix) of § 1915.508 requires fire watch personnel to be trained to know the location and use of barriers that are part of the employer's fire protection program. It is a common shipyard practice to use barriers to prevent molten metal or sparks from traveling to uncleaned areas where flammable materials may be ignited. However, such barriers can also create hazards by blocking an employee's evacuation route or by suppressing ventilation to the point where fumes or vapors can accumulate. Therefore, a worker who stands fire watch must understand how to use the barriers safely.

In § 1915.508(e)(2)(x), OSHA requires that the fire watch be trained in the means of communicating with each worker performing hot work to ensure the safety of workers. Effective communication is especially important when a fire watch can not see a hot worker because, for example, the fire watch is on the other side of a compartment from the hot worker. In this case, the means of communication may be as simple as tapping on the bulkhead to signal whether the hot worker can continue or must stop, or an electronic communication system such as a two-way radio.

In paragraphs (e)(2)(xi) and (xii) of § 1915.508, OSHA requires that fire watches be trained to know when and how to initiate fire alarm procedures and to be familiar with the shipyard's evacuation plan. OSHA recognizes that fire watch work assignments may change between vessels or vessel sections and land-side facilities and that each may have different alarm systems, evacuation plans, and exit routes. For example, a shipyard may be performing repair work on a Navy vessel, a cruise liner, and a tug at the same time, all with different alarm systems.

Regardless of the system, a primary responsibility of a fire watch must be to recognize when to initiate a fire alarm procedure and begin evacuation. A fire watch needs to know when a fire has progressed beyond the incipient stage, when a fire alarm should be activated, and when evacuation should be initiated. The employer must make sure that fire watches are familiar with the type of alarm systems being used on the vessel where they are working.

OSHA received no comment on proposed paragraphs (c)(2)(iii) through (c)(2)(xii) of § 1915.508 and they are being adopted as paragraphs (e)(2)(iii) through (e)(2)(xii).

Proposed paragraph (c)(3) of § 1915.508, now (e)(3), requires the employer to ensure that each fire watch is trained to alert others to exit the work area whenever: (i) The fire watch perceives an unsafe condition associated with hot work; (ii) the fire watch perceives that a hot worker is in danger; (iii) evacuation is ordered by the employer or designated representative; or (iv) an evacuation signal such as an alarm is activated. OSHA received no comment on these provisions, and they are carried forward in the final rule renumbered.

Records

Proposed paragraph (d) of § 1915.508, now renumbered as (f), requires that the employer document that the training required by paragraphs (a) through (e) has been accomplished. In § 1915.508(f)(1), OSHA requires the employer to document the worker's training by keeping a record of the worker's name, the name of the trainer, the type of training, and the date(s) of the training. As proposed, this requirement was separated into four separate provisions, paragraphs (d)(1)(i) through (iv). In this final standard, OSHA has collapsed all of these requirements into one provision, paragraph (f)(1), in order to make them easier to read. No comments were received on these four requirements, and OSHA is carrying them forward as proposed, with the exception of the renumbering.

In addition, OSHA requires in paragraph (f)(2) of § 1915.508 that the employer keep the documentation for at least one year and, consistent with other OSHA standards, make the record available for inspection and copying by OSHA personnel on request. The record that must be kept is minimal. It can be kept as part of the worker's personnel file, in a master file of training, or in any other format the employer chooses. A record in an electronic file or database is sufficient. However, regardless of how the record is kept, it must be available for inspection by the persons authorized to see it. To be available means that it can be easily found, so the employer must first decide how the record is to be kept, and then make certain there is easy access to it.

This record must be kept until it is replaced by a worker's new training record, or for one year from when the record was made, whichever is longest. In the case of a worker who will no longer perform fire watch duties, or is no longer employed at the shipyard, OSHA requires the employer to keep that employee's training record for one year. This information may be relevant in determining whether the employer's fire watch training program was adequate, and for research on the effectiveness of the standard. OSHA sought comment on whether the requirement for training record retention should be one or three years. No comments were received on this issue, or any other aspect of recordkeeping in this paragraph. Therefore, OSHA has renumbered the proposed paragraphs, and carried them forward in the final standard.

Section 1915.509 Definitions

Most of the definitions in OSHA's proposed standard have been carried forward unchanged in the final standard. Additions or modifications have been made in response to various comments, and to provide appropriate definitions for the new terms used in the final standard. The following section discusses the terms for which comments were received, the definitions added to the rule, the definitions OSHA has modified to improve clarity, and the terms that have been included in the final rule without change.

Comments on the Proposed Definitions

OSHA's proposed definition for ''fire response employee'' was ''a shipyard employee who performs shipyard employment firefighting.'' Atlantic Marine submitted a comment stating that the proposed definition was too broad (Ex. 21–17–1). ''This definition could mean any employee that discharges a fire extinguisher at the shipyard, including office and administrative personnel.'' OSHA agrees that the term could be misinterpreted as defined. OSHA has modified the definition of ''fire response employee'' in the final standard to read ''a shipyard employee who carries out duties and responsibilities of shipyard firefighting in accordance with the fire safety plan. A fire response employee may be a full-time employee, may occupy any position or rank within the shipyard, and may engage in fire emergency operations.''

Several commenters submitted comments on the definition of ''hazardous atmosphere'' (Exs. 21–3; 21–8; 21–14; 22–4; 22–15). NFPA commented that the definition of ''hazardous atmosphere'' was taken from a general industry standard (29 CFR 1910.146 Permit required confined spaces) and inappropriately applied to a maritime industry context in the proposed standard (Ex. 21–14). In addition, there was concern that the use of the term ''dangerous atmosphere'' in addition to ''hazardous atmosphere'' was unnecessary and could cause confusion (Exs. 21–14; 22–4). The term ''dangerous atmosphere'' was used in the proposed standard in the note to § 1915.507(c)(4) and was defined in

§ 1915.509. The term ''hazardous atmosphere'' was used in §§ 1915.506(a) and .508(b)(10) and defined in § 1915.509. OSHA agrees with these commenters. The term ''hazardous atmosphere'' in §§ 1915.506(a) and .508(b)(10) in the final standard has been replaced with the term ''dangerous atmosphere'' and the definition of ''hazardous atmosphere'' in § 1915.509 has been deleted. The proposed definition of ''dangerous atmosphere'' has been carried forward unchanged into the final standard.

The Connecticut Department of Labor raised a question regarding the term ''incident management system'' (IMS), asking: ''Why does the proposed standard change the customary verbiage of incident command system to incident management system? Will this confuse fire departments that will also be involved in the firefighting?'' (Ex. 22–4)

While the Incident Command System (ICS) term is customary language often used by firefighting professionals, OSHA proposed to use the IMS term to be consistent with the terms currently in use by firefighting organizations and training institutions. However, OSHA is modifying the proposed definition of IMS in § 1915.509 to match the definition used in NFPA 1500–2002, which is: ''A system that defines the roles and responsibilities to be assumed by personnel and the operating procedures to be used in the management and direction of emergency operations; the system is also referred to as an incident command system (ICS)''. This modification does not change the meaning or intent of the proposed term, and is more consistent with the NFPA's use of the term IMS. For more discussion, see § 1915.505(d)(3) above.

Definitions Added to the Final Rule

Marine Chemist Services, Inc. suggested that a new definition be added for ''approved fire watch training course.'' As addressed in the discussion of § 1915.508 above, OSHA will be altering § 1915.508(c)(1) to require training to be given by a qualified instructor. OSHA believes that there is no need for an additional definition for ''approved fire watch training course'' and has not added this term to the definition section of the final standard.

NGNN suggested that OSHA add a description or a definition for ''drop test'' in order to clarify the term (Ex. 21–8). Drop test is a term found in § 1915.503(b)(2)(iv) ''* * * and a drop test is done using gauges or other positive means. * * *'' NGNN's suggested definition was:

> Method utilizing gauges to ensure the integrity of an oxygen fuel gas system. Prior to lighting a torch, but after all connections have been safely made, adjust the operating pressures by turning the adjusting screws clockwise. The pressure at the regulators should be set slightly higher than the required tip pressures. Close the manifold or cylinder supply valves and watch the gauges for at least sixty (60) seconds. Any drop in pressure indicates a leak. Do not turn on the supply valve again until the leak has been repaired. Other than pressure testing gas lines while submerged in water at test shops, only the use of pressure gauges provides a positive measure of line integrity.

OSHA agrees with NGNN that a definition would be appropriate. However, OSHA has modified the definition of ''drop test'' in the final standard to read:

> * * * [M]ethod utilizing gauges to ensure the integrity of an oxygen fuel gas burning system. The method requires that the burning torch is installed to one end of the oxygen and fuel gas lines and then the gauges are attached to the other end of the hoses. The manifold or cylinder supply valve is opened and the system is pressurized. The manifold or cylinder supply valve is then closed and the gauges are watched for at least sixty (60) seconds. Any drop in pressure indicates a leak. * * *

The final sentences of the NGNN suggestion are procedural rather than part of the definition and are therefore unnecessary.

OSHA has added three additional new definitions to the final standard. The definitions of ''class II standpipe system,'' ''incipient stage fire,'' and ''small hose system'' have been added for clarity. These definitions are identical to the definitions used in 29 CFR 1910.155(c). In the NPRM (67 FR 76241), OSHA referred to ''incipient stage fire'' as a definition used in Part 1910 that would also be utilized for this subpart. There were no comments received on this definition, nor any objections to using this definition from Part 1910. OSHA has also included ''class II standpipe system'' and ''small hose system'' in this final standard because they are technical terms used within the definition of incipient stage fire. Including these definitions in the final standard provides greater clarity and reduces the need to reference Part 1910 standards in the final standard.

Definitions Modified by OSHA

In order to be more compatible with the regulatory text, and the remainder of Part 1915, OSHA has revised the following definitions for clarity and uniformity. The proposed rule defined a ''designated area'' as ''an area established for hot work after an assessment of fire hazard potential of facilities, vessels, or vessel sections such as a fabrication shop.'' OSHA has simplified this definition to define a designated area as ''an area established for ongoing hot work after an inspection has determined that the area is free of fire hazards.''

The proposed definition of ''emergency operations'' defined the activities performed by a fire response organization. The last portion of the definition included examples of special operations that may be performed, such as HAZMAT release mitigation, standby for flight operations and off-site fires. Because special operations could include any number of activities in addition to these examples, and the examples did not add clarity to the definition, they have been removed.

''Fire suppression'' defines the activities involved in controlling and extinguishing fires. The proposed definition included a list of the hazards associated with fire suppression. OSHA realizes that the act of fire suppression creates many hazards, and that employees must be protected from those hazards. However, the Agency has deleted examples of these hazards from the definition since they are not a necessary part of the definition of fire suppression.

''Shipyard firefighting'' is the activity of rescue, fire suppression, and property conservation in all shipyard workplaces. The proposed definition included the sentence: ''Shipyard firefighting includes any fire that requires a fire attack hose line of 1½ inch diameter or larger to fight, and self-contained breathing apparatus by responders.'' OSHA did not want to imply that the definition of shipyard firefighting was limited to the use of specific equipment. Therefore, the final definition does not include examples of specific equipment.

Definitions Deleted by OSHA

OSHA has deleted three proposed definitions from the final standard; the terms ''affected employee,'' ''hot work,'' and ''shipyard employment.'' No comments were received on these definitions. The Agency decided to not define ''affected employees'' since employers can make the determination of who is affected. The terms ''hot work'' and ''shipyard employment'' are both currently defined in § 1915.4 for the entire part 1915. OSHA has concluded it is unnecessary to define them again for this subpart.

Definitions Included Without Change

OSHA did not receive comments on the remaining definitions and believes that all of the terms used in this subpart are ''terms of the industry'' and are universally recognized by shipyard employees and employers. These terms

include ''alarm,'' ''alarm system,'' ''body harness,'' ''contract employer,'' ''designated area,'' ''fire hazard,'' ''fire protection,'' ''fire response,'' ''fire response organization,'' ''fire watch,'' ''fixed extinguishing system,'' ''flammable liquid,'' ''hazardous substance,'' ''hose systems,'' ''host employer,'' ''inerting,'' ''interior structural firefighting operations,'' ''multi-employer workplace,'' ''personal alert safety system,'' ''physically isolated,'' ''physical isolation,'' ''protected space,'' ''proximity firefighting,'' ''qualified instructor,'' ''rescue,'' and ''standpipe.'' Therefore, OSHA has adopted these proposed definitions in this final standard.

IV. Summary of the Final Economic and Regulatory Flexibility Analysis

Introduction

OSHA's Final Economic and Regulatory Flexibility Analysis addresses issues related to the costs, benefits, technological feasibility, and economic impacts (including small business impacts) of the Agency's ''Fire Protection in Shipyard Employment'' standard. This analysis also evaluates the non-regulatory alternatives to this standard.

The final standard will affect approximately 669 employers and about 98,000 employees in the shipbuilding, ship repair and shipbreaking industries. OSHA estimates that the final standard will prevent 1 death and 292 workplace injuries (102 lost workday injuries and 190 non-lost workday injuries) annually. The Agency estimates approximately $6.2 million in cost savings from these 292 injuries.

OSHA has determined that this final standard is not an economically significant regulatory action under E.O. 12866 and not a major rule under the Congressional Review provisions of the Small Business Regulatory Enforcement Fairness Act. OSHA has provided the Office of Information and Regulatory Affairs with an assessment of the costs, benefits, and alternatives, as required by section 6(a)(3)(C) of E.O. 12866, which is summarized below. Executive Order (EO) 12866 requires regulatory agencies to conduct an economic analysis for rules that meet certain criteria. The most frequently used criterion under EO 12866 is that the rule will impose annual costs on the economy of $100 million or more. Neither the benefits nor the costs of this rule exceed $100 million.

The Regulatory Flexibility Act of 1980 (RFA), as amended in 1996, requires OSHA to determine whether the Agency's regulatory actions will have a significant impact on a substantial number of small entities. OSHA's analysis indicates that the final rule will not have significant impacts on a substantial number of small entities. OSHA's Final Economic Analysis (FEA) and regulatory flexibility analysis include: A description of the industries potentially affected by the standard; an evaluation of the risks addressed; an assessment of the benefits attributable to the final standard; a determination of the technological feasibility of the requirements of the standard; an estimate of the costs employers will incur to comply with the standard; A determination of the economic feasibility of compliance with the standard; and an analysis of the economic and other impacts associated with this rulemaking, including those on small businesses. The FEA has been provided to the docket as Ex. 23. This section of the preamble summarizes the results of that analysis.

Affected Industries

The final Fire Protection in Shipyard Employment standard will affect all establishments in the shipbuilding, shipbreaking, and ship repair industries. These include large shipyards, government shipyards, and shipyards operated under Navy contracts, operations owning a dock or dry dock, and the vast majority of small firms that perform shipbuilding and repair work, such as metal fabricators, painters, asbestos removal, etc., who do not own or rent docks. For purposes of this analysis, OSHA has defined small firms as: (1) Firms with fewer than 1,000 employees (the Small Business Administration (SBA) definition of small businesses in this sector); (2) firms with fewer than 250 employees (the definition of small business recommended by the negotiated rulemaking committee); and (3) firms with fewer than 20 employees. OSHA has based its estimates of number of firms, establishments, employment, and wages on general Bureau of Labor Statistics (BLS) and Department of Commerce data for the standard industrial classification (SIC) codes for shipbuilding and ship repair 3731 and shipbreaking 4499. OSHA has based its estimates concerning revenues of firms on SBA data, and concerning profit rates on Robert Morris Associate's data. Table IV–1 shows the total number of establishments, number of firms, employment, and revenues and profits per firm affected by the rule. As the table shows, there are 717 establishments owned by 669 firms in the industries. The industries employ 97,822 workers, of whom 70 percent are production employees.

The Passenger Vessel Association (PVA) commented that there may be considerably more employers with ''[n]o more than 250 employees who have employees engaged in ''shipyard employment'' but that are not included in the government's shipbuilding and shipbreaking categories.'' (Ex. 21–9). PVA further stated: ''If your estimate of 621 affected companies with no more than 250 employees is too low, as we suspect it is, then you have underestimated the total costs and economic impacts of the proposed standard.'' OSHA derived the estimate of establishments having less than 250 employees (alternate definition of a small firm) from a manipulation of the SBA and Bureau of the Census (BOC) County Business Patterns data. This involved OSHA applying the distribution of County Business Patterns for the categories of 100–249 employees and 250–499 employees to the profile data for the SBA 100–499 size classification. Having thus estimated SBA profile data for the firm size classification of 250–499 employees, OSHA subtracted these data totals from the totals for the size classification 1–500 employees presented in Table II–1 in the FEA; this calculation yielded SBA totals for a size category of 1–250 employees shown in Column 9 in Table II–2 in the FEA. (Ex. 23). This was necessary because neither data source publishes establishment counts using this size classification. PVA did not supply OSHA with the necessary data to refute the Agency's findings, thus OSHA is continuing to use its mathematical method of estimation with the SBA data using the BOC distribution percentages. In summary, OSHA has used the best available data for the purpose of estimating the number of affected entities. It is possible that these data omit some firms that engaged in shipbuilding, shipbreaking and ship repair—particularly establishments that do this as only a small part of their total work. However, there are no data available on the number of such establishments. Conversely, OSHA may have overestimated the costs by including some employees as working in establishments that are primarily engaged in shipbuilding, shipbreaking, and repair when they actually work in other industries.

TABLE IV–1.—INDUSTRIAL PROFILE OF EMPLOYEES AND ESTABLISHMENTS

Industry characteristic	1–19 Employees	1–250 Employees	1–1,000 Employees	>1,000 Employees	Entire affected industry
Total Establishments	412	621	697	20	717
Total Firms	412	607	660	9	669
Total Employees	2,305	14,774	39,063	58,759	97,822
Revenues Per Firm ($1,000's)	$653	$2,353	$5,907	$718,166	$15,540
Profits Per Firm ($1,000)	$24	$85	$213	$25,854	$559

Source: Office of Regulatory Analysis, OSHA.

Evaluation of Risk and Potential Benefits

For this Final Economic Analysis, OSHA used the same approach as in the Preliminary Economic Analysis (PEA) used in the proposed rule. The PEA involved developing a profile of the risks facing workers in shipyards that might be affected by the standard. OSHA's risk profile for exposure to fire-based risks in shipyards is based on data from the BLS' National Census of Fatal Occupational Injuries, data from the BLS' Survey of Occupational Injuries and Illnesses, and an analysis of OSHA fatality/catastrophe inspection data obtained from the Agency's Integrated Management Information System.

OSHA anticipates that the final standard will significantly reduce the number of fire and explosion related incidents and resulting injuries and fatalities currently reported in the shipyard industry. OSHA believes that the final standard's requirements for inspection prior to hot work, fire watches, planning, and training will help to save lives and prevent injuries in the shipyard workforce. OSHA estimates that approximately 1 fatality, 110 injuries involving days away from work, and 204 injuries not involving days away from work occur annually among shipyard workers due to fire and explosions. This is the current industry risk baseline used in this analysis. OSHA projects that full compliance with the proposed standard would annually prevent 0.88 fatalities, 102 injuries involving days away from work, and 190 injuries not involving days away from work. No comments were received regarding these estimated benefits.

In addition to saving lives and improving overall safety in shipyards, OSHA believes that full compliance with the final standard would yield substantial cost savings to parties within and connected with the industry and ultimately to society as a whole. These monetized benefits take the form of reductions in employer and insurer accident-related costs in several areas: Value of lost output associated with temporary total disabilities and permanent partial disabilities, an income-based measure derived from estimates of workers' compensation indemnity payments; reductions in accident-related medical costs; administrative expenses incurred by workers' compensation insurers; and indirect costs related to productivity losses, work stoppages, and accident investigations and reports. Applying data from the insurance industry on the direct costs of accidents and data from the literature on the indirect costs of accidents and other administrative-related costs to OSHA's preliminary estimate of avoided injuries, the Agency monetized the value of the cost savings employers and society will accrue by avoiding these injuries. OSHA estimates that annual costs savings of $6.2 million will result from compliance with the final standard. These savings are those associated with injuries due to fires. OSHA did not attempt to quantify the cost savings resulting from reduced fire damage to property and reduced need to respond to fires.

Some commenters questioned: ''[H]ow can there be a general savings for the shipyards if they are spending more money on both training and equipment in order to meet the new requirements of the proposed rule?'' [Exs. 21–4, 21–5, 21–6, 21–7, 21–13, 21–16, 22–1, and 22–2]. This general savings (or cost savings) estimate is based on the estimated reduction in injury-related costs due to the standard (developed in the Benefits chapter). This estimate includes indemnity payments, lost income, medical costs, and administrative costs for both temporary total disability and permanent partial disability injuries. These cost savings accrue partially to individual employers, partially to the industry as a whole, partially to the government in the form of reduced taxes, and partially to injured employees. Thus, the cost savings are not necessarily savings to employers, but savings to society as a whole.

On the other hand, the annualized compliance costs estimates are annualized costs to employers, discounted using a 7 percent rate over ten years, which the employer is projected to spend to comply with the standard. These estimates are based on the employment and establishment counts in the Industrial Profile and the dollar costs needed to comply with the standard. In addition to the employment and establishment counts, these estimates also include non-compliance rates to account for establishments that have already complied with the requirements.

Thus, OSHA estimates that the final standard will prevent approximately 292 injuries and one death per year. As a result of prevention of the injuries, OSHA estimates that there will be direct cost savings to society of $6.2 million per year, excluding savings associated with reduced property damage and reduced fire response costs. For informational purposes, OSHA also estimates $6.3 million in cost savings from the 1 prevented death, for a total of $12.5 million in monetized benefits.

Technological Feasibility and Compliance Costs

Consistent with the legal framework established by the OSH Act, Executive Order 12866, and court decisions, OSHA has assessed the technological feasibility of the fire protection in shipyards standard. The standard does not require any practices not already undertaken in many shipyards today. Moreover, the final standard is based on a consensus draft recommended to the Agency by a negotiated rulemaking committee (the Committee) consisting of representatives from labor, government, and industry. These representatives included small employers who would be affected by changes to the maritime regulations. The Committee reached consensus on the language of the draft, thereby implicitly acknowledging the feasibility of the proposed revisions to the standard. Therefore, based on the fact that many firms in the industry are already implementing the controls and practices required by the standard and that the Committee reached consensus on the proposed revisions, OSHA has determined that the final fire protection

in shipyard employment standard is technologically feasible.

OSHA developed estimates of the costs of compliance for shipyard employers subject to the final standard. To develop these estimates, OSHA first examined the extent to which shipyard employers were already in compliance with the requirements of the standard as a result of existing OSHA requirements, compliance with rules of other parties (such as the U.S. Navy in some shipyards), and compliance with voluntary codes and good practices. Eliminating provisions for which there is already substantial compliance, OSHA arrived at the list of activities for which shipyard employers would incur costs shown in Table IV–2. Table IV–2 shows that the annualized costs of the final standard are $4.3 million per year. Ninety-one percent of the costs are associated with fire watch-related provisions; most of these costs are for posting additional fire watch personnel in situations in which fire watches are not currently being posted.

Many commenters stated that: ''[T]he analysis estimates that for the industry as a whole, the average cost per employee for training is around $1.'' (Exs. 21–4, 21–5, 21–6, 21–7, 21–13, 22–1, 22–2). These same commenters state that the additional requirements for annual fire safety and fire watch training would increase the training time from 0.5 hours to 1 hour per employee, suggesting a far greater additional cost than $1 per employee. One commenter stated that it employs 117 employees with a training cost of $850 per employee (Ex. 21–13). OSHA assumed that large establishments are in compliance with the training requirements, thus they would not incur new training cost burdens. Even in smaller size establishments, OSHA estimated that some employers now comply with these training requirements. (Table V–1 on page V–4 of the FEA (Ex. 23)). Further, not all employees need fire watch training. Finally, OSHA computed an annualized cost in which it assumed that most training occurs in the initial year and would not need to be repeated for all workers. These costs only apply to small and medium size establishments that were estimated to not be in compliance with the final standard. Therefore, the similarity between the estimate for Fire Watch Training ($95,204) in Table V–2 of the proposed rule and the number of estimated employees (97,822) in Table V–1 of the proposed rule is merely coincidence (67 FR 76242–76243).

In regard to the provisions on training and use of fire watches, the majority of shipbuilding and repair activity is for the U.S. Navy. The Navy already requires its shipyard contractors to employ fire watches for hot work. The Agency also received comment on the cost of supplying pressure gauges for drop tests of fuel gas and oxygen hoses (Exs. 21–4; 21–5; 21–6; 21–7; 21–13; 21–17; 22–2). The final standard does not require employers to perform drop tests with gauges, since hoses can simply be rolled back to the supply manifold. Since this is the least cost alternative, the Agency did not include estimates of costs for gauges.

TABLE IV–2.—TOTAL ANNUALIZED COMPLIANCE COST PER REQUIREMENT FOR THE PROPOSED STANDARD

Requirement	Annualized cost
Posting Fire Watches	$3,789,057
Safe Work Practices	245,839
Fire Watch Written Program	36,546
Fire Response Policy	11,630
Fire Safety Plan	36,546
Fire Watch Training	95,204
Fire Safety Plan Review/ General Training	37,327
Fire Protection Systems Training	9,642
Fire Response Training	49,430
Total	4,261,222

Numbers do not total due to rounding.
Source: Office of Regulatory Analysis, OSHA.

Economic Impacts

OSHA analyzed the impacts of these compliance costs on firms in the shipbuilding and repair sector. In order to do this, OSHA determined costs as a percentage of revenues and costs as a percentage of profits. These two measures (in percent) correspond to two assumptions used by economists to bound the range of possible impacts: The assumption of no-cost pass-through, *i.e.*, that employers will be unable to pass any of the costs of compliance forward to their customers (compliance costs as a percentage of profits), and the assumption of full-cost pass-through (compliance costs as a percentage of revenues), *i.e.*, that employers will be able to pass all of the costs of compliance forward to their customers. As summarized in Table IV–3 below, OSHA estimates that, if affected firms in the shipbuilding sector were forced to absorb these compliance costs entirely from profits (a highly unlikely scenario), profits would be reduced by an average of 1.14 percent. If, at the other extreme, affected firms were able to pass all of these compliance costs forward to their customers, OSHA projects that the price (revenue) increase required to pay for these costs would be less than 0.1 percent (0.04 percent). Given the minimal impact on both prices and profits, OSHA concludes that the regulation is economically feasible. To the contrary, NNGN stated in its comments that it has serious concerns with several aspects of the proposed rule that will result in more than $35 million annually to its company with little to no added benefit to its health and safety program or the industry at large (Ex. 21–8). NGNN is a large shipyard with ''845 trained and qualified fire wardens whose primary responsibilities are fire prevention and emergency evacuation and 3,325 fire watch qualified employees whose primary responsibility is fire prevention and response in support of a specific hot work job.'' (Id.) In addition, the company reports that it has ''long-standing fire safety practices that in many cases go beyond that required in existing regulations, as well as the proposed standard.'' OSHA is perplexed by NGNN's assertion that the rule will result in costs of more than $35 million annually to this company. The Agency assumed that this firm was in compliance with the requirements of the final standard, which seems to be validated by its comments. Thus, this company would not incur a high compliance cost burden and its economic impact would be minimal.

TABLE IV–3.—ECONOMIC IMPACTS FOR THE FINAL STANDARD

Firm size	Compliance costs as a percentage of revenues	Compliance costs as a percentage of profits
All Firms	0.04	1.14
1–19 Employees	0.11	3.09
1–250 employees	0.07	1.83
1–1000 Employees (SBA Definition)	0.06	1.61

Source: Office of Regulatory Analysis, OSHA.

Regulatory Flexibility Analysis

The Regulatory Flexibility Act of 1980 (RFA), as amended in 1996 (5 U.S.C. 601 *et seq.*), requires regulatory agencies to determine whether regulatory actions will adversely affect small entities. SBA defines small entities in terms of number of employees or annual receipts. For employers in SIC 3731 (shipbuilding and repair), small firms are defined by SBA as those with fewer than 1,000 employees. As shown in Table IV–3, for firms with fewer than 1,000 employees, costs are 1.61 percent

of profits and 0.06 percent of revenues. OSHA also examined costs as a percentage of profits and revenues for firms with fewer than 250 employees, as recommended by the Committee, and for firms with fewer than 20 employees to see whether there might be significant impacts on the very smallest firms. For firms with fewer than 250 employees, costs were 1.83 percent of profits and 0.07 percent of revenues. For firms with fewer than 20 employees, costs were 3.09 percent of profits and 0.11 percent of revenues.

A major source of these disparate impacts is lower levels of baseline compliance by small firms. Although the economic impacts on the smallest size class of employers are low, they are somewhat higher than for larger employers.

OSHA has set the criteria that if costs exceed one percent of revenues or five percent of profits, then the impact on small entities is considered significant for purposes of complying with the RFA. For all of the classes of affected small firms in the shipbuilding and repair and shipbreaking sectors, costs were less than one percent of revenues and five percent of profits. OSHA therefore certifies that this regulation will not have an economically significant impact on a substantial number of small entities. The Agency did not receive any substantive comments on this portion of the analysis.

Non-Regulatory Alternatives

OSHA concludes that economic and social alternatives to a federal workplace standard fail to adequately protect workers from the hazards associated with fires in the shipbuilding and repair and shipbreaking industries. Tort liability laws and workers' compensation provide some protection, but institutional factors limit effective means of addressing the significant costs of occupational injuries and illnesses. Therefore, OSHA finds that this final standard will provide the necessary remedy.

V. Regulatory Flexibility Certification

In accord with the Regulatory Flexibility Act, OSHA has examined the regulatory requirements of the final rule to determine if it will have a significant economic effect on a substantial number of small entities. As indicated in the previous section of this preamble, the final standard does not increase employers' compliance costs, and may even reduce the regulatory burden on all affected employers, both large and small. Accordingly, the Agency certifies that the final standard does not have a significant economic effect on a substantial number of small entities.

VI. Environmental Impact Assessment

In accordance with the requirements of the National Environmental Policy Act (NEPA) of 1969 (42 U.S.C. 4321 *et seq.*), Council on Environmental Quality regulations (40 U.S.C. part 1500 *et seq.*), and the Department of Labor's NEPA regulations (29 CFR part 11), the Assistant Secretary has determined that this final rule will not have a significant impact on the external environment.

VII. Paperwork Reduction Act

This final rule contains several collections of information (paperwork) requirements that are subject to review by the Office of Management and Budget (OMB) under the Paperwork Reduction Act of 1995 (PRA–95), 44 U.S.C. 3501 *et seq.*, and its regulation at 5 CFR 1320. A collection of information is defined in PRA–95 to mean ''the obtaining, causing to be obtained, soliciting, or requiring the disclosure to third parties or the pubic of facts or opinions by or for an agency regardless of form or format.'' (44 U.S.C. 3502(3)(A).

In the preamble to the proposed rule, OSHA asked for comment on each of the paperwork requirements in Subpart P (67 FR 76243–76246). OSHA received no comments on the paperwork burdens or OSHA's estimation of those burdens. Therefore, the Agency has made no changes to the paperwork package. OSHA estimates the total burden hours associated with all of the collection of information requirements at 5,344 burden hours in the first year and 4,788 burden hours in the second and subsequent years.

Potential respondents are not required to respond to the information collection requirements until they have been approved by OMB, and a currently valid OMB control number is displayed. OMB is currently reviewing OSHA's request for approval of the 29 CFR Part 1915 Subpart P information collections. OSHA will publish a subsequent **Federal Register** document when OMB takes further action on the information collection requirements in the shipyard fire protection rule.

VIII. Unfunded Mandates

For the purposes of the Unfunded Mandates Reform Act of 1995, this rule does not include any Federal mandate that may result in increased expenditures by State, local, and tribal governments, or increased expenditures by the private sector of more than $100 million in any year.

IX. Federalism

OSHA has reviewed this final rule in accordance with the Executive Order on Federalism (Executive Order 13132, 64 FR 43255) which requires that agencies, to the extent possible, refrain from limiting state policy options, consult with states prior to taking any actions that would restrict state policy options, and take such actions only when there is clear constitutional authority and the presence of a problem of national scope. The Order provides for preemption of State law only if there is a clear Congressional intent for the Agency to do so. Any such preemption is to be limited to the extent possible.

Section 18 of the OSH Act (29 U.S.C. 651 *et seq.*) expresses Congress' intent to preempt state laws where OSHA has promulgated occupational safety and health standards. Under the OSH Act, a state can avoid preemption on issues covered by Federal standards only if it submits, and obtains Federal approval of, a plan for the development of such standards and their enforcement (State-Plan state). 29 U.S.C. 667. Occupational safety and health standards developed by such State-Plan states must, among other things, be at least as effective in providing safe and healthful employment and places of employment as the Federal standards. As Congress has expressed a clear intent for OSHA standards to preempt State job safety and health rules in areas addressed by OSHA standards, in States without OSHA-approved State plans, this rule limits State policy options only to the extent required by law. In States with OSHA-approved State Plans, this action does not significantly limit State policy options.

X. State-Plan States

The 26 States or U.S. Territories with their own OSHA approved occupational safety and health plans must revise their standards to reflect this final standard or show OSHA why there is no need for action, *e.g.*, because an existing state standard covering this area is already ''at least as effective as'' the new Federal standard. The state standard must be at least as effective as this final standard, must be applicable to both the private and public (State and local government employees) sectors, and must be completed within six months of the publication date of this final Federal rule.

Currently only five States (California, Minnesota, Oregon, Vermont, and Washington) with their own State plans cover private sector onshore maritime activities in whole or in part. Federal OSHA enforces maritime standards

offshore in all States and provides onshore coverage of maritime activities in Federal OSHA States, in the five States above, to the extent not covered by them, and in all the other State Plan States: Alaska, Arizona, Connecticut (plan covers only State and local government employees), Hawaii, Indiana, Iowa, Kentucky, Maryland, Michigan, Nevada, New Jersey (plan covers only State and local government employees), New Mexico, New York (plan covers only State and local government employees), North Carolina, Puerto Rico, South Carolina, Tennessee, Utah, Virginia, Virgin Islands (plan covers only territorial government employees), and Wyoming. All State Plans must also extend protection to any public sector workers engaged in maritime activities.

List of Subjects in 29 CFR Part 1915

Fire protection, Hazardous substances, Incorporation by reference, Longshore and harbor workers, Occupational safety and health, Reporting and recordkeeping requirements, Shipyards, Vessels.

XI. Authority and Signature

This document was prepared under the direction of John L. Henshaw, Assistant Secretary of Labor for Occupational Safety and Health, U.S. Department of Labor, 200 Constitution Avenue, NW., Washington, DC 20210. It is issued pursuant to sections 4, 6, and 8 of the Occupational Safety and Health Act of 1970 (29 U.S.C. 653, 655, 657); Secretary of Labor's Order No. 5–2002 (67 FR 65008); and 29 Part 1911.

Signed in Washington, DC, this 7th day of September, 2004.

John L. Henshaw,

Assistant Secretary of Labor.

■ OSHA amends 29 CFR Part 1915 as follows:

PART 1915—[AMENDED]

■ 1. The authority citation for part 1915 is revised as follows:

Authority: Sec. 41, Longshore and Harbor Workers' Compensation Act (33 U.S.C. 941); secs. 4, 6, and 8 of the Occupational Safety and Health Act of 1970 (29 U.S.C. 653, 655, 657); Secretary of Labor's Order No. 12–71 (36 FR 8754), 8–76 (41 FR 25059), 9–83 (48 FR 35736), 1–90 (55 FR 9033), 6–96 (62 FR 111), 3–2000 (65 FR 50017), or 5–2002 (67 FR 65008) as applicable; 29 CFR Part 1911.

■ 2. In § 1915.5, add paragraph (d)(4) to read as follows:

§ 1915.5 Incorporation by reference.

* * * * *

(d)(4) The following material is available for purchase from the National Fire Protection Association, 1 Batterymarch Park, PO Box 9101, Quincy, MA 02269–9101:

(i) NFPA 1981–1997, Standard on Open-Circuit Self-Contained Breathing Apparatus for the Fire Service, IBR approved for § 1915.505(e)(3)(v).

(ii) NFPA 1971–2000, Standard on Protective Ensemble for Structural Fire Fighting, IBR approved for § 1915.505(e)(4)(ii).

(iii) NFPA 1976–2000, Standard on Protective Ensemble for Proximity Fire Fighting, IBR approved for § 1915.505(e)(5).

(iv) NFPA 1982–1998, Standard on Personal Alert Safety Systems (PASS), IBR approved for § 1915.505(e)(6)(ii).

(v) NFPA 1983–2001, Standard on Fire Service Life Safety Rope and System Components, IBR approved for § 1915.505(e)(7)(i).

(vi) NFPA 10–1998, Standard for Portable Fire Extinguishers, IBR approved for § 1915.507(b)(1).

(vii) NFPA 14–2000, Standard for the Installation of Standpipe, Private Hydrant, and Hose Systems, IBR approved for § 1915.507(b)(2) and (d)(1).

(viii) NFPA 72–1999, National Fire Alarm Code, IBR approved for § 1915.507(c)(6).

(ix) NFPA 13–1999, Installation of Sprinkler Systems, IBR approved for § 1915.507(d)(2).

(x) NFPA 750–2000, Standard on Water Mist Fire Protection Systems, IBR approved for § 1915.507(d)(2).

(xi) NFPA 25–2002, Inspection, Testing, and Maintenance of Water-Based Fire Protection Systems, IBR approved for § 1915.507(d)(2).

(xii) NFPA 15–2001, Standard for Water Spray Fixed Systems for Fire Protection, IBR approved for § 1915.507(d)(3).

(xiii) NFPA 11–1998, Standard for Low-Expansion Foam, IBR approved for § 1915.507(d)(3).

(xiv) NFPA 11A–1999, Standard for Medium- and High-Expansion Foam Systems, IBR approved for § 1915.507(d)(3).

(xv) NFPA 17–2002, Standard for Dry Chemical Extinguishing Systems, IBR approved for § 1915.507(d)(4).

(xvi) NFPA 12–2000, Standard on Carbon Dioxide Extinguishing Systems, IBR approved for § 1915.507(d)(5).

(xvii) NFPA 12A–1997, Standard on Halon 1301 Fire Extinguishing Systems, IBR approved for § 1915.507(d)(5).

(xviii) NFPA 2001–2000, Standard on Clean Agent Fire Extinguishing Systems, IBR approved for § 1915.507(d)(5).

(xix) NFPA 1403–2002, Standard on Live Fire Training Evolutions, IBR approved for § 1915.508(d)(8).

■ 3. § 1915.52 [Removed]

Remove § 1915.52.

■ 4. Part 1915 is amended by adding a new subpart, subpart P, to read as follows:

Subpart P—Fire Protection in Shipyard Employment

Sec.
1915.501 General provisions.
1915.502 Fire safety plan.
1915.503 Precautions for hot work.
1915.504 Fire watches.
1915.505 Fire response.
1915.506 Hazards of fixed extinguishing systems on board vessels and vessel sections.
1915.507 Land-side fire protection systems.
1915.508 Training.
1915.509 Definitions applicable to this subpart.
Appendix A to Subpart P—Model Fire Safety Plan (Non-Mandatory)

§ 1915.501 General provisions.

(a) *Purpose.* The purpose of the standard in this subpart is to require employers to protect all employees from fire hazards in shipyard employment, including employees engaged in fire response activities.

(b) *Scope.* This subpart covers employers with employees engaged in shipyard employment aboard vessels and vessel sections, and on land-side operations regardless of geographic location.

(c) *Employee participation.* The employer must provide ways for employees or employee representatives, or both to participate in developing and periodically reviewing programs and policies adopted to comply with this subpart.

(d) *Multi-employer worksites.* (1) *Host employer responsibilities.* The host employer's responsibilities are to:

(i) Inform all employers at the worksite about the content of the fire safety plan including hazards, controls, fire safety and health rules, and emergency procedures;

(ii) Make sure the safety and health responsibilities for fire protection are assigned as appropriate to other employers at the worksite; and

(iii) If there is more than one host employer, each host employer must communicate relevant information about fire-related hazards to other host employers. When a vessel owner or operator (temporarily) becomes a host shipyard employer by directing the work of ships' crews on repair or modification of the vessel or by hiring other contractors directly, the vessel owner or operator must also comply with these provisions for host employers.

(2) *Contract employer responsibilities.* The contract employer's responsibilities are to:

(i) Make sure that the host employer knows about the fire-related hazards associated with the contract employer's work and what the contract employer is doing to address them; and

(ii) Advise the host employer of any previously unidentified fire-related hazards that the contract employer identifies at the worksite.

§ 1915.502 Fire safety plan.

(a) *Employer responsibilities.* The employer must develop and implement a written fire safety plan that covers all the actions that employers and employees must take to ensure employee safety in the event of a fire. (See Appendix A to this subpart for a Model Fire Safety Plan.)

(b) *Plan elements.* The employer must include the following information in the fire safety plan:

(1) Identification of the significant fire hazards;

(2) Procedures for recognizing and reporting unsafe conditions;

(3) Alarm procedures;

(4) Procedures for notifying employees of a fire emergency;

(5) Procedures for notifying fire response organizations of a fire emergency;

(6) Procedures for evacuation;

(7) Procedures to account for all employees after an evacuation; and

(8) Names, job titles, or departments for individuals who can be contacted for further information about the plan.

(c) *Reviewing the plan with employees.* The employer must review the plan with each employee at the following times:

(1) Within 90 days of December 14, 2004, for employees who are currently working;

(2) Upon initial assignment for new employees; and

(3) When the actions the employee must take under the plan change because of a change in duties or a change in the plan.

(d) *Additional employer requirements.* The employer also must:

(1) Keep the plan accessible to employees, employee representatives, and OSHA;

(2) Review and update the plan whenever necessary, but at least annually;

(3) Document that affected employees have been informed about the plan as required by paragraph (c) of this section; and

(4) Ensure any outside fire response organization that the employer expects to respond to fires at the employer's worksite has been given a copy of the current plan.

(e) *Contract employers.* Contract employers in shipyard employment must have a fire safety plan for their employees, and this plan must comply with the host employer's fire safety plan.

§ 1915.503 Precautions for hot work.

(a) *General requirements.* (1) *Designated Areas.* The employer may designate areas for hot work in sites such as vessels, vessel sections, fabricating shops, and subassembly areas that are free of fire hazards.

(2) *Non-designated Areas.* (i) Before authorizing hot work in a non-designated area, the employer must visually inspect the area where hot work is to be performed, including adjacent spaces, to ensure the area is free of fire hazards, unless a Marine Chemist's certificate or Shipyard Competent Person's log is used for authorization.

(ii) The employer shall authorize employees to perform hot work only in areas that are free of fire hazards, or that have been controlled by physical isolation, fire watches, or other positive means.

Note to paragraph (a)(2): The requirements of paragraph (a)(2) apply to all hot work operations in shipyard employment except those covered by § 1915.14.

(b) *Specific requirements.* (1) *Maintaining fire hazard-free conditions.* The employer must keep all hot work areas free of new hazards that may cause or contribute to the spread of fire. Unexpected energizing and energy release are covered by 29 CFR 1915.181, Subpart L. Exposure to toxic and hazardous substances is covered in 29 CFR 1915.1000 through 1915.1450, subpart Z.

(2) *Fuel gas and oxygen supply lines and torches.* The employer must make sure that:

(i) No unattended fuel gas and oxygen hose lines or torches are in confined spaces;

(ii) No unattended charged fuel gas and oxygen hose lines or torches are in enclosed spaces for more than 15 minutes; and

(iii) All fuel gas and oxygen hose lines are disconnected at the supply manifold at the end of each shift;

(iv) All disconnected fuel gas and oxygen hose lines are rolled back to the supply manifold or to open air to disconnect the torch; or extended fuel gas and oxygen hose lines are not reconnected at the supply manifold unless the lines are given a positive means of identification when they were first connected and the lines are tested using a drop test or other positive means to ensure the integrity of fuel gas and oxygen burning system.

§ 1915.504 Fire watches.

(a) *Written fire watch policy.* The employer must create and keep current a written policy that specifies the following requirements for employees performing fire watch in the workplace:

(1) The training employees must be given (§ 1915.508(c) contains detailed fire watch training requirements);

(2) The duties employees are to perform;

(3) The equipment employees must be given; and

(4) The personal protective equipment (PPE) that must be made available and worn as required by 29 CFR Part 1915, Subpart I.

(b) *Posting fire watches.* The employer must post a fire watch if during hot work any of the following conditions are present:

(1) Slag, weld splatter, or sparks might pass through an opening and cause a fire;

(2) Fire-resistant guards or curtains are not used to prevent ignition of combustible materials on or near decks, bulkheads, partitions, or overheads;

(3) Combustible material closer than 35 ft. (10.7m) to the hot work in either the horizontal or vertical direction cannot be removed, protected with flame-proof covers, or otherwise shielded with metal or fire-resistant guards or curtains;

(4) The hot work is carried out on or near insulation, combustible coatings, or sandwich-type construction that cannot be shielded, cut back, or removed, or in a space within a sandwich type construction that cannot be inerted;

(5) Combustible materials adjacent to the opposite sides of bulkheads, decks, overheads, metal partitions, or sandwich-type construction may be ignited by conduction or radiation;

(6) The hot work is close enough to cause ignition through heat radiation or conduction on the following:

(i) Insulated pipes, bulkheads, decks, partitions, or overheads; or

(ii) Combustible materials and/or coatings;

(7) The work is close enough to unprotected combustible pipe or cable runs to cause ignition; or

(8) A Marine Chemist, a Coast Guard-authorized person, or a shipyard Competent Person, as defined in 29 CFR Part 1915, Subpart B, requires that a fire watch be posted.

(c) *Assigning employees to fire watch duty.* (1) The employer must not assign other duties to a fire watch while the hot work is in progress.

(2) Employers must ensure that employees assigned to fire watch duty:

(i) Have a clear view of and immediate access to all areas included in the fire watch;

(ii) Are able to communicate with workers exposed to hot work;

(iii) Are authorized to stop work if necessary and restore safe conditions within the hot work area;

(iv) Remain in the hot work area for at least 30 minutes after completion of the hot work, unless the employer or its representative surveys the exposed area and makes a determination that there is no further fire hazard;

(v) Are trained to detect fires that occur in areas exposed to the hot work;

(vi) Attempt to extinguish any incipient stage fires in the hot work area that are within the capability of available equipment and within the fire watch's training qualifications, as defined in § 1915.508;

(vii) Alert employees of any fire beyond the incipient stage; and

(viii) If unable to extinguish fire in the areas exposed to the hot work, activate the alarm.

(3) The employer must ensure that employees assigned to fire watch are physically capable of performing these duties.

§ 1915.505 Fire response.

(a) *Employer responsibilities.* The employer must:

(1) Decide what type of response will be provided and who will provide it; and

(2) Create, maintain, and update a written policy that:

(i) Describes the internal and outside fire response organizations that the employer will use; and

(ii) Defines what evacuation procedures employees must follow, if the employer chooses to require a total or partial evacuation of the worksite at the time of a fire.

(b) *Required written policy information.* (1) *Internal fire response.* If an internal fire response is to be used, the employer must include the following information in the employer's written policy:

(i) The basic structure of the fire response organization;

(ii) The number of trained fire response employees;

(iii) The fire response functions that may need to be carried out;

(iv) The minimum number of fire response employees necessary, the number and types of apparatuses, and a description of the fire suppression operations established by written standard operating procedures for each type of fire response at the employer's facility;

(v) The type, amount, and frequency of training that must be given to fire response employees; and

(vi) The procedures for using protective clothing and equipment.

(2) *Outside fire response.* If an outside fire response organization is used, the employer must include the following information in the written policy:

(i) The types of fire suppression incidents to which the fire response organization is expected to respond at the employer's facility or worksite;

(ii) The liaisons between the employer and the outside fire response organizations; and

(iii) A plan for fire response functions that:

(A) Addresses procedures for obtaining assistance from the outside fire response organization;

(B) Familiarizes the outside fire response organization with the layout of the employer's facility or worksite, including access routes to controlled areas, and site-specific operations, occupancies, vessels or vessel sections, and hazards; and,

(C) Sets forth how hose and coupling connection threads are to be made compatible and includes where the adapter couplings are kept; or

(D) States that the employer will not allow the use of incompatible hose connections.

(3) *A combination of internal and outside fire response.* If a combination of internal and outside fire response is to be used, the employer must include the following information, in addition to the requirements in paragraphs (b)(1) and (2) of this section, in the written policy:

(i) The basic organizational structure of the combined fire response;

(ii) The number of combined trained fire responders;

(iii) The fire response functions that may need to be carried out;

(iv) The minimum number of fire response employees necessary, the number and types of apparatuses, and a description of the fire suppression operations established by written standard operating procedures for each particular type of fire response at the worksite; and

(v) The type, amount, and frequency of joint training with outside fire response organizations if given to fire response employees.

(4) *Employee evacuation.* The employer must include the following information in the employer's written policy:

(i) Emergency escape procedures;

(ii) Procedures to be followed by employees who may remain longer at the worksite to perform critical shipyard employment operations during the evacuation;

(iii) Procedures to account for all employees after emergency evacuation is completed;

(iv) The preferred means of reporting fires and other emergencies; and

(v) Names or job titles of the employees or departments to be contacted for further information or explanation of duties.

(5) *Rescue and emergency response.* The employer must include the following information in the employer's written policy:

(i) A description of the emergency rescue procedures; and

(ii) Names or job titles of the employees who are assigned to perform them.

(c) *Medical requirements for shipyard fire response employees.* The employer must ensure that:

(1) All fire response employees receive medical examinations to assure that they are physically and medically fit for the duties they are expected to perform;

(2) Fire response employees, who are required to wear respirators in performing their duties, meet the medical requirements of § 1915.154;

(3) Each fire response employee has an annual medical examination; and

(4) The medical records of fire response employees are kept in accordance with § 1915.1020.

(d) *Organization of internal fire response functions.* The employer must:

(1) Organize fire response functions to ensure enough resources to conduct emergency operations safely;

(2) Establish lines of authority and assign responsibilities to ensure that the components of the internal fire response are accomplished;

(3) Set up an incident management system to coordinate and direct fire response functions, including:

(i) Specific fire emergency responsibilities;

(ii) Accountability for all fire response employees participating in an emergency operation; and

(iii) Resources offered by outside organizations; and

(4) Provide the information required in this paragraph (d) to the outside fire response organization to be used.

(e) *Personal protective clothing and equipment for fire response employees.* (1) *General requirements.* The employer must:

(i) Supply to all fire response employees, at no cost, the appropriate personal protective clothing and equipment they may need to perform expected duties; and

(ii) Ensure that fire response employees wear the appropriate

personal protective clothing and use the equipment, when necessary, to protect them from hazardous exposures.

(2) *Thermal stability and flame resistance.* The employer must:

(i) Ensure that each fire response employee exposed to the hazards of flame does not wear clothing that could increase the extent of injury that could be sustained; and

(ii) Prohibit wearing clothing made from acetate, nylon, or polyester, either alone or in blends, unless it can be shown that:

(A) The fabric will withstand the flammability hazard that may be encountered; or

(B) The clothing will be worn in such a way to eliminate the flammability hazard that may be encountered.

(3) *Respiratory protection.* The employer must:

(i) Provide self-contained breathing apparatus (SCBA) to all fire response employees involved in an emergency operation in an atmosphere that is immediately dangerous to life or health (IDLH), potentially IDLH, or unknown;

(ii) Provide SCBA to fire response employees performing emergency operations during hazardous chemical emergencies that will expose them to known hazardous chemicals in vapor form or to unknown chemicals;

(iii) Provide fire response employees who perform or support emergency operations that will expose them to hazardous chemicals in liquid form either:

(A) SCBA, or

(B) Respiratory protective devices certified by the National Institute for Occupational Safety and Health (NIOSH) under 42 CFR Part 84 as suitable for the specific chemical environment;

(iv) Ensure that additional outside air supplies used in conjunction with SCBA result in positive pressure systems that are certified by NIOSH under 42 CFR Part 84;

(v) Provide only SCBA that meet the requirements of NFPA 1981–1997 Standard on Open-Circuit Self-Contained Breathing Apparatus for the Fire Service (incorporated by reference, see § 1915.5); and

(vi) Ensure that the respiratory protection program and all respiratory protection equipment comply with § 1915.154.

(4) *Interior structural firefighting operations.* The employer must:

(i) Supply at no cost to all fire response employees exposed to the hazards of shipyard fire response, a helmet, gloves, footwear, and protective hoods, and either a protective coat and trousers or a protective coverall; and

(ii) Ensure that this equipment meets the applicable recommendations in NFPA 1971–2000 Standard on Protective Ensemble for Structural Fire Fighting (incorporated by reference, see § 1915.5).

(5) *Proximity firefighting operations.* The employer must provide, at no cost, to all fire response employees who are exposed to the hazards of proximity firefighting, appropriate protective proximity clothing meets the applicable recommendations in NFPA 1976–2000 Standard on Protective Ensemble for Proximity Fire Fighting (incorporated by reference, see § 1915.5).

(6) *Personal Alert Safety System (PASS) devices.* The employer must:

(i) Provide each fire response employee involved in firefighting operations with a PASS device; and

(ii) Ensure that each PASS device meets the recommendations in NFPA 1982–1998 Standard on Personal Alert Safety Systems (PASS), (incorporated by reference, see § 1915.5).

(7) *Life safety ropes, body harnesses, and hardware.* The employer must ensure that:

(i) All life safety ropes, body harnesses, and hardware used by fire response employees for emergency operations meet the applicable recommendations in NFPA 1983–2001, Standard on Fire Service Life Safety Rope and System Components (incorporated by reference, see § 1915.5);

(ii) Fire response employees use only Class I body harnesses to attach to ladders and aerial devices; and

(iii) Fire response employees use only Class II and Class III body harnesses for fall arrest and rappelling operations.

(f) *Equipment maintenance.* (1) *Personal protective equipment.* The employer must inspect and maintain personal protective equipment used to protect fire response employees to ensure that it provides the intended protection.

(2) *Fire response equipment.* The employer must:

(i) Keep fire response equipment in a state of readiness;

(ii) Standardize all fire hose coupling and connection threads throughout the facility and on vessels and vessel sections by providing the same type of hose coupling and connection threads for hoses of the same or similar diameter; and

(iii) Ensure that either all fire hoses and coupling connection threads are the same within a facility or vessel or vessel section as those used by the outside fire response organization, or supply suitable adapter couplings if such an organization is expected to use the fire response equipment within a facility or vessel or vessel section.

§ 1915.506 Hazards of fixed extinguishing systems on board vessels and vessel sections.

(a) *Employer responsibilities.* The employer must comply with the provisions of this section whenever employees are exposed to fixed extinguishing systems that could create a dangerous atmosphere when activated in vessels and vessel sections, regardless of geographic location.

(b) *Requirements for automatic and manual systems.* Before any work is done in a space equipped with fixed extinguishing systems, the employer must either:

(1) Physically isolate the systems or use other positive means to prevent the systems' discharge; or

(2) Ensure employees are trained to recognize:

(i) Systems' discharge and evacuation alarms and the appropriate escape routes; and

(ii) Hazards associated with the extinguishing systems and agents including the dangers of disturbing system components and equipment such as piping, cables, linkages, detection devices, activation devices, and alarm devices.

(c) *Sea and dock trials.* During trials, the employer must ensure that all systems shall remain operational.

(d) *Doors and hatches.* The employer must:

(1) Take protective measures to ensure that all doors, hatches, scuttles, and other exit openings remain working and accessible for escape in the event the systems are activated; and

(2) Ensure that all inward opening doors, hatches, scuttles, and other potential barriers to safe exit are removed, locked open, braced, or otherwise secured so that they remain open and accessible for escape if systems' activation could result in a positive pressure in the protected spaces sufficient to impede escape.

(e) *Testing the system.* (1) When testing a fixed extinguishing system involves a total discharge of extinguishing medium into a space, the employer must evacuate all employees from the space and assure that no employees remain in the space during the discharge. The employer must retest the atmosphere in accordance with § 1915.12 to ensure that the oxygen levels are safe for employees to enter.

(2) When testing a fixed extinguishing system does not involve a total discharge of the systems extinguishing medium, the employer must make sure that the system's extinguishing medium

is physically isolated and that all employees not directly involved in the testing are evacuated from the protected space.

(f) *Conducting system maintenance.* Before conducting maintenance on a fixed extinguishing system, the employer must ensure that the system is physically isolated.

(g) *Using fixed manual extinguishing systems for fire protection.* If fixed manual extinguishing systems are used to provide fire protection for spaces in which the employees are working, the employer must ensure that:

(1) Only authorized employees are allowed to activate the system;

(2) Authorized employees are trained to operate and activate the systems; and

(3) All employees are evacuated from the protected spaces, and accounted for, before the fixed manual extinguishing system is activated.

§ 1915.507 Land-side fire protection systems.

(a) *Employer responsibilities.* The employer must ensure all fixed and portable fire protection systems needed to meet an OSHA standard for employee safety or employee protection from fire hazards in land-side facilities, including, but not limited to, buildings, structures, and equipment, meet the requirements of this section.

(b) *Portable fire extinguishers and hose systems.* (1) The employer must select, install, inspect, maintain, and test all portable fire extinguishers according to NFPA 10–1998 Standard for Portable Fire Extinguishers (incorporated by reference, see § 1915.5).

(2) The employer is permitted to use Class II or Class III hose systems, in accordance with NFPA 10–1998, as portable fire extinguishers if the employer selects, installs, inspects, maintains, and tests those systems according to the specific recommendations in NFPA 14–2000 Standard for the Installation of Standpipe, Private Hydrant, and Hose Systems (incorporated by reference, see § 1915.5).

(c) *General requirements for fixed extinguishing systems.* The employer must:

(1) Ensure that any fixed extinguishing system component or extinguishing agent is approved by an OSHA Nationally Recognized Testing Laboratory, meeting the requirements of 29 CFR 1910.7, for use on the specific hazards the employer expects it to control or extinguish;

(2) Notify employees and take the necessary precautions to ensure employees are safe from fire if for any reason a fire extinguishing system stops working, until the system is working again;

(3) Ensure all repairs to fire extinguishing systems and equipment are done by a qualified technician or mechanic;

(4) Provide and ensure employees use proper personal protective equipment when entering discharge areas in which the atmosphere remains hazardous to employee safety or health, or provide safeguards to prevent employees from entering those areas. See § 1915.12 for additional requirements applicable to safe entry into spaces containing dangerous atmospheres;

(5) Post hazard warning or caution signs at both the entrance to and inside of areas protected by fixed extinguishing systems that use extinguishing agents in concentrations known to be hazardous to employee safety or health; and

(6) Select, install, inspect, maintain, and test all automatic fire detection systems and emergency alarms according to NFPA 72–1999 National Fire Alarm Code (incorporated by reference, see § 1915.5).

(d) *Fixed extinguishing systems.* The employer must select, install, maintain, inspect, and test all fixed systems required by OSHA as follows:

(1) Standpipe and hose systems according to NFPA 14–2000 Standard for the Installation of Standpipe, Private Hydrant, and Hose Systems (incorporated by reference, see § 1915.5);

(2) Automatic sprinkler systems according to NFPA 25–2002 Standard for the Inspection, Testing, and Maintenance of Water-based Fire Protection Systems, (incorporated by reference, see § 1915.5), and either NFPA 13–1999 Standard for the Installation of Sprinkler Systems (incorporated by reference, see § 1915.5) or NFPA 750–2000 Standard on Water Mist Fire Protection Systems (incorporated by reference, see § 1915.5);

(3) Fixed extinguishing systems that use water or foam as the extinguishing agent according to NFPA 15–2001 Standard for Water Spray Fixed Systems for Fire Protection (incorporated by reference, see § 1915.5); NFPA 11–1998 Standard for Low-Expansion Foam (incorporated by reference, see § 1915.5); and NFPA 11A–1999 Standard for Medium- and High-Expansion Foam Systems (incorporated by reference, see 1915.5);

(4) Fixed extinguishing systems using dry chemical as the extinguishing agent according to NFPA 17–2002 Standard for Dry Chemical Extinguishing Systems (incorporated by reference, see § 1915.5); and

(5) Fixed extinguishing systems using gas as the extinguishing agent according to NFPA 12–2000 Standard on Carbon Dioxide Extinguishing Systems (incorporated by reference, see § 1915.5); NFPA 12A–1997 Standard on Halon 1301 Fire Extinguishing Systems (incorporated by reference, see § 1915.5); and NFPA 2001–2000 Standard on Clean Agent Fire Extinguishing Systems (incorporated by reference, see § 1915.5).

§ 1915.508 Training.

(a) The employer must train employees in the applicable requirements of this section:

(1) Within 90 days of December 14, 2004, for employees currently working;

(2) Upon initial assignment for new employees; and

(3) When necessary to maintain proficiency for employees previously trained.

(b) *Employee training.* The employer must ensure that all employees are trained on:

(1) The emergency alarm signals, including system discharge alarms and employee evacuation alarms; and

(2) The primary and secondary evacuation routes that employees must use in the event of a fire in the workplace. While all vessels and vessel sections must have a primary evacuation route, a secondary evacuation route is not required when impracticable.

(c) *Additional training requirements for employees expected to fight incipient stage fires.* The employer must ensure that employees expected to fight incipient stage fires are trained on the following:

(1) The general principles of using fire extinguishers or hose lines, the hazards involved with incipient firefighting, and the procedures used to reduce these hazards;

(2) The hazards associated with fixed and portable fire protection systems that employees may use or to which they may be exposed during discharge of those systems; and

(3) The activation and operation of fixed and portable fire protection systems that the employer expects employees to use in the workplace.

(d) *Additional training requirements for shipyard employees designated for fire response.* The employer must:

(1) Have a written training policy stating that fire response employees must be trained and capable of carrying out their duties and responsibilities at all times;

(2) Keep written standard operating procedures that address anticipated

emergency operations and update these procedures as necessary;

(3) Review fire response employee training programs and hands-on sessions before they are used in fire response training to make sure that fire response employees are protected from hazards associated with fire response training;

(4) Provide training for fire response employees that ensures they are capable of carrying out their duties and responsibilities under the employer's standard operating procedures;

(5) Train new fire response employees before they engage in emergency operations;

(6) At least quarterly, provide training on the written operating procedures to fire response employees who are expected to fight fires;

(7) Use qualified instructors to conduct the training;

(8) Conduct any training that involves live fire response exercises in accordance with NFPA 1403–2002 Standard on Live Fire Training Evolutions (incorporated by reference, see § 1915.5);

(9) Conduct semi-annual drills according to the employer's written procedures for fire response employees that cover site-specific operations, occupancies, buildings, vessels and vessel sections, and fire-related hazards; and

(10) Prohibit the use of smoke generating devices that create a dangerous atmosphere in training exercises.

(e) *Additional training requirements for fire watch duty.* (1) The employer must ensure that each fire watch is trained by an instructor with adequate fire watch knowledge and experience to cover the items as follows:

(i) Before being assigned to fire watch duty;

(ii) Whenever there is a change in operations that presents a new or different hazard;

(iii) Whenever the employer has reason to believe that the fire watch's knowledge, skills, or understanding of the training previously provided is inadequate; and

(iv) Annually.

(2) The employer must ensure that each employee who stands fire watch duty is trained in:

(i) The basics of fire behavior, the different classes of fire and of extinguishing agents, the stages of fire, and methods for extinguishing fires;

(ii) Extinguishing live fire scenarios whenever allowed by local and federal law;

(iii) The recognition of the adverse health effects that may be caused by exposure to fire;

(iv) The physical characteristics of the hot work area;

(v) The hazards associated with fire watch duties;

(vi) The personal protective equipment (PPE) needed to perform fire watch duties safely;

(vii) The use of PPE;

(viii) The selection and use of any fire extinguishers and fire hoses likely to be used by a fire watch in the work area;

(ix) The location and use of barriers;

(x) The means of communication designated by the employer for fire watches;

(xi) When and how to start fire alarm procedures; and

(xii) The employer's evacuation plan.

(3) The employer must ensure that each fire watch is trained to alert others to exit the space whenever:

(i) The fire watch perceives an unsafe condition;

(ii) The fire watch perceives that a worker performing hot work is in danger;

(iii) The employer or a representative of the employer orders an evacuation; or

(iv) An evacuation signal, such as an alarm, is activated.

(f) *Records.* The employer must keep records that demonstrate that employees have been trained as required by paragraphs (a) through (e) of this section.

(1) The employer must ensure that the records include the employee's name; the trainer's name; the type of training; and the date(s) on which the training took place.

(2) The employer must keep each training record for one year from the time it was made or until it is replaced with a new training record, whichever is shorter, and make it available for inspection and copying by OSHA on request.

§ 1915.509 Definitions applicable to this subpart.

Alarm—a signal or message from a person or device that indicates that there is a fire, medical emergency, or other situation that requires emergency response or evacuation. At some shipyards, this may be called an ''incident'' or a ''call for service.''

Alarm system—a system that warns employees at the worksite of danger.

Body harness—a system of straps that may be secured about the employee in a manner that will distribute the fall arrest forces over at least the thighs, shoulders, chest, and pelvis, with means for attaching it to other components of a personal fall arrest system.

Class II standpipe system—a 1½ inch (3.8 cm) hose system which provides a means for the control or extinguishment of incipient stage fires.

Contract employer—an employer, such as a painter, joiner, carpenter, or scaffolding sub-contractor, who performs work under contract to the host employer or to another employer under contract to the host employer at the host employer's worksite. This excludes employers who provide incidental services that do not influence shipyard employment (such as mail delivery or office supply services).

Dangerous atmosphere—an atmosphere that may expose employees to the risk of death, incapacitation, injury, acute illness, or impairment of ability to self-rescue (*i.e.*, escape unaided from a confined or enclosed space).

Designated area—an area established for hot work after an inspection that is free of fire hazards.

Drop Test—a method utilizing gauges to ensure the integrity of an oxygen fuel gas burning system. The method requires that the burning torch is installed to one end of the oxygen and fuel gas lines and then the gauges are attached to the other end of the hoses. The manifold or cylinder supply valve is opened and the system is pressurized. The manifold or cylinder supply valve is then closed and the gauges are watched for at least sixty (60) seconds. Any drop in pressure indicates a leak.

Emergency operations—activities performed by fire response organizations that are related to: rescue, fire suppression, emergency medical care, and special operations or activities that include responding to the scene of an incident and all activities performed at that scene.

Fire hazard—a condition or material that may start or contribute to the spread of fire.

Fire protection—methods of providing fire prevention, response, detection, control, extinguishment, and engineering.

Fire response—the activity taken by the employer at the time of an emergency incident involving a fire at the worksite, including fire suppression activities carried out by internal or external resources or a combination of both, or total or partial employee evacuation of the area exposed to the fire.

Fire response employee—a shipyard employee who carries out the duties and responsibilities of shipyard firefighting in accordance with the fire safety plan.

Fire response organization—an organized group knowledgeable, trained, and skilled in shipyard firefighting operations that responds to shipyard fire emergencies, including: fire brigades, shipyard fire departments,

private or contractual fire departments, and municipal fire departments.

Fire suppression—the activities involved in controlling and extinguishing fires.

Fire watch—the activity of observing and responding to the fire hazards associated with hot work in shipyard employment and the employees designated to do so.

Fixed extinguishing system—a permanently installed fire protection system that either extinguishes or controls fire occurring in the space it protects.

Flammable liquid—any liquid having a flashpoint below 100 °F (37.8 °C), except any mixture having components with flashpoints of 100 °F (37.8 °C) or higher, the total of which make up 99 percent or more of the total volume of the mixture.

Hazardous substance—a substance likely to cause injury by reason of being explosive, flammable, poisonous, corrosive, oxidizing, an irritant, or otherwise harmful.

Hose systems—fire protection systems consisting of a water supply, approved fire hose, and a means to control the flow of water at the output end of the hose.

Host employer—an employer who is in charge of coordinating work or who hires other employers to perform work at a multi-employer workplace.

Incident management system—a system that defines the roles and responsibilities to be assumed by personnel and the operating procedures to be used in the management and direction of emergency operations; the system is also referred to as an ''incident command system'' (ICS).

Incipient stage fire—a fire, in the initial or beginning stage, which can be controlled or extinguished by portable fire extinguishers, Class II standpipe or small hose systems without the need for protective clothing or breathing apparatus.

Inerting—the displacement of the atmosphere in a permit space by noncombustible gas (such as nitrogen) to such an extent that the resulting atmosphere is noncombustible. This procedure produces an IDLH oxygen-deficient atmosphere.

Interior structural firefighting operations—the physical activity of fire response, rescue, or both involving a fire beyond the incipient stage inside of buildings, enclosed structures, vessels, and vessel sections.

Multi-employer workplace—a workplace where there is a host employer and at least one contract employer.

Personal Alert Safety System (PASS)—a device that sounds a loud signal if the wearer becomes immobilized or is motionless for 30 seconds or more.

Physical isolation—the elimination of a fire hazard by removing the hazard from the work area (at least 35 feet for combustibles), by covering or shielding the hazard with a fire-resistant material, or physically preventing the hazard from entering the work area.

Physically isolated—positive isolation of the supply from the distribution piping of a fixed extinguishing system. Examples of ways to physically isolate include: removing a spool piece and installing a blank flange; providing a double block and bleed valve system; or completely disconnecting valves and piping from all cylinders or other pressure vessels containing extinguishing agents.

Protected space—any space into which a fixed extinguishing system can discharge.

Proximity firefighting—specialized fire-fighting operations that require specialized thermal protection and may include the activities of rescue, fire suppression, and property conservation at incidents involving fires producing very high levels of conductive, convective, and radiant heat such as aircraft fires, bulk flammable gas fires, and bulk flammable liquid fires. Proximity firefighting operations usually are exterior operations but may be combined with structural firefighting operations. Proximity firefighting is not entry firefighting.

Qualified instructor—a person with specific knowledge, training, and experience in fire response or fire watch activities to cover the material found in § 1915.508(b) or (c).

Rescue—locating endangered persons at an emergency incident, removing those persons from danger, treating the injured, and transporting the injured to an appropriate health care facility.

Shipyard firefighting—the activity of rescue, fire suppression, and property conservation involving buildings, enclosed structures, vehicles, vessels, aircraft, or similar properties involved in a fire or emergency situation.

Small hose system—a system of hoses ranging in diameter from ⅝″ (1.6 cm) up to 1½″ (3.8 cm) which is for the use of employees and which provides a means for the control and extinguishment of incipient stage fires.

Standpipe—a fixed fire protection system consisting of piping and hose connections used to supply water to approved hose lines or sprinkler systems. The hose may or may not be connected to the system.

Appendix A to Subpart P—Model Fire Safety Plan (Non-Mandatory)

Model Fire Safety Plan

Note: This appendix is non-mandatory and provides guidance to assist employers in establishing a Fire Safety Plan as required in § 1915.502.

Table of Contents

I. Purpose.
II. Work site fire hazards and how to properly control them.
III. Alarm systems and how to report fires.
IV. How to evacuate in different emergency situations.
V. Employee awareness.

I. Purpose

The purpose of this fire safety plan is to inform our employees of how we will control and reduce the possibility of fire in the workplace and to specify what equipment employees may use in case of fire.

II. Work Site Fire Hazards and How To Properly Control Them

A. Measures to contain fires.

B. Teaching selected employees how to use fire protection equipment.

C. What to do if you discover a fire.

D. Potential ignition sources for fires and how to control them.

E. Types of fire protection equipment and systems that can control a fire.

F. The level of firefighting capability present in the facility, vessel, or vessel section.

G. Description of the personnel responsible for maintaining equipment, alarms, and systems that are installed to prevent or control fire ignition sources, and to control fuel source hazards.

III. Alarm Systems and How To Report Fires

A. A demonstration of alarm procedures, if more than one type exists.

B. The work site emergency alarm system.

C. Procedures for reporting fires.

IV. How To Evacuate in Different Emergency Situations

A. Emergency escape procedures and route assignments.

B. Procedures to account for all employees after completing an emergency evacuation.

C. What type of evacuation is needed and what the employee's role is in carrying out the plan.

D. Helping physically impaired employees.

V. Employee Awareness

Names, job titles, or departments of individuals who can be contacted for further information about this plan.

[FR Doc. 04–20608 Filed 9–14–04; 8:45 am]

BILLING CODE 4510–26–P

Federal Register

Wednesday,
September 15, 2004

Part III

The President

Proclamation 7809—National Alcohol and Drug Addiction Recovery Month, 2004

Proclamation 7810—National Ovarian Cancer Awareness Month, 2004

Proclamation 7811—National Days of Prayer and Remembrance, 2004

Proclamation 7812—Patriot Day, 2004

Federal Register
Vol. 69, No. 178
Wednesday, September 15, 2004

Presidential Documents

Title 3—

The President

Proclamation 7809 of September 10, 2004

National Alcohol and Drug Addiction Recovery Month, 2004

By the President of the United States of America

A Proclamation

Across our country, millions of Americans suffer from the debilitating effects of alcohol and drug abuse. Substance abuse shatters lives, divides families, and robs people of their promise and potential.

My Administration is confronting these dangers. We are pursuing an ambitious, focused strategy to cut demand for drugs at home, disrupt supplies abroad, and ensure that citizens living with addiction get the treatment they need. We have made progress in fighting substance abuse, but there is more to do.

One of the worst decisions our children can make is to endanger their lives and their futures with alcohol or drugs. My Administration is addressing this problem with a strategy of education, treatment, and law enforcement. We also support random student drug testing as a prevention tool. We are seeing the results of all of these efforts, as more of our young people are also choosing to avoid alcohol and drugs. Drug use among youth has declined by 11 percent from 2001 to 2003.

My Administration is committed to expanding the choice of service providers for those struggling with addiction. We recognize the success of faith-based and community approaches in which caring citizens join together to offer alternatives to traditional treatment, helping people change habits by changing their hearts. Through the Access to Recovery initiative, we have provided an additional $100 million in new grants this year to expand options for substance abuse treatment and recovery support services through vouchers, which allow individuals to choose the services that best meet their recovery needs. In my 2005 budget, I have proposed doubling funding for this initiative to further expand treatment. In total, I have requested $3.7 billion for drug treatment and research programs for 2005, an increase of about 25 percent since 2001.

The struggle against substance abuse is a community effort, and this month is an opportunity to further raise awareness and support the fight against the destructive cycle of addiction. I call on all Americans to make responsible and healthy choices so that everyone can realize the great promise of our Nation.

NOW, THEREFORE, I, GEORGE W. BUSH, President of the United States of America, by virtue of the authority vested in me by the Constitution and laws of the United States, do hereby proclaim September 2004 as National Alcohol and Drug Addiction Recovery Month. I call upon the people of the United States to observe this month with appropriate programs, ceremonies, and activities.

IN WITNESS WHEREOF, I have hereunto set my hand this tenth day of September, in the year of our Lord two thousand four, and of the Independence of the United States of America the two hundred and twenty-ninth.

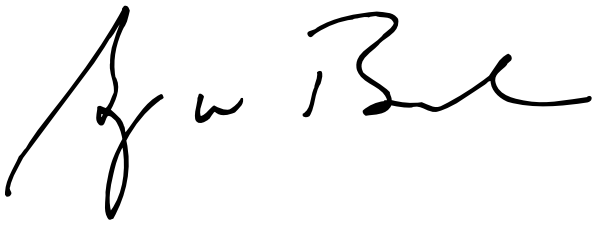

[FR Doc. 04–20948
Filed 9–14–04; 9:09 am]
Billing code 3195–01–P

Presidential Documents

Proclamation 7810 of September 10, 2004

National Ovarian Cancer Awareness Month, 2004

By the President of the United States of America

A Proclamation

Ovarian cancer affects thousands of Americans each year. During this time of tremendous medical breakthroughs, we are seeing progress in the effort to overcome this disease, but our work is not finished. National Ovarian Cancer Awareness Month provides an opportunity for our citizens to learn more about early detection and treatment for this deadly cancer.

Although new cases of ovarian cancer in the United States have been decreasing for more than a decade, the American Cancer Society estimates that about 25,000 women will be diagnosed this year and over 16,000 will die from the disease. Family and personal history can affect the likelihood of developing ovarian cancer. Women should talk with their doctors and health care providers about preventative screenings and the benefits and risks of different tests. Understanding risk factors and the importance of a healthy lifestyle plays a vital role in our efforts to save lives and reduce the number of women who suffer from ovarian cancer.

As with many cancers, the chance for successful treatment of ovarian cancer increases with early detection. The medical community continues to work on developing an effective screening test that can detect the disease in its early stages when symptoms may not exist or are very difficult to diagnose. The National Institutes of Health has invested more than $120 million this year in ovarian cancer research and expects to invest more in 2005. Through the National Cancer Institute's Ovarian Cancer Prevention and Early Detection Study, scientists are following women at increased risk for the cancer to assess how preemptive surgery and screening methods affect ovarian cancer occurrence and quality of life. The Centers for Disease Control and Prevention's Ovarian Cancer Control Initiative will also focus on factors related to early detection and treatment.

The United States continues to stay on the leading edge of new discoveries in medicine, and my Administration remains committed to providing the resources necessary to learn the causes, understand the symptoms, and find a cure for ovarian cancer. During this month, we reaffirm our dedication to these goals and recognize the strength and courage of the women who have suffered from this disease. We also recognize the families, friends, and loved ones who support and encourage these brave women. By working together, we can bring the hope of a healthier future to women in the fight against ovarian cancer.

NOW, THEREFORE, I, GEORGE W. BUSH, President of the United States of America, by virtue of the authority vested in me by the Constitution and laws of the United States, do hereby proclaim September 2004 as National Ovarian Cancer Awareness Month. I call upon the people of the United States to observe this month with appropriate programs and activities.

IN WITNESS WHEREOF, I have hereunto set my hand this tenth day of September, in the year of our Lord two thousand four, and of the Independence of the United States of America the two hundred and twenty-ninth.

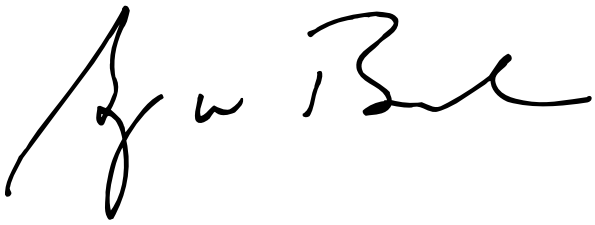

[FR Doc. 04–20949
Filed 9–14–04; 9:09 am]
Billing code 3195–01–P

Presidential Documents

Proclamation 7811 of September 10, 2004

National Days of Prayer and Remembrance, 2004

By the President of the United States of America

A Proclamation

On September 11, 2001, America was attacked with deliberate and massive cruelty. We remember the tragedy of that day. We remember the images of fire, and the final calls of love, and the courage of rescuers who saw death and did not flee. We remember the many good lives that ended too soon. We remember the families left behind to carry a burden of sorrow; they have shown a courage of their own. During this year's National Days of Prayer and Remembrance, Americans join together to pray for those who were lost, and for their loved ones.

Since that day, our Nation has waged a relentless war against terror and evil. We pray for the brave men and women of the United States Armed Forces who are serving our country on the front lines of this war. They have answered a great call, and our Nation is grateful for their courage, love of country, and dedication to duty. We recognize the sacrifice of military families and pray that they find comfort in faith and in knowing that their loved ones are serving an historic cause—defending our country and advancing peace and freedom in the world.

On this third anniversary of September 11th, we feel the warm courage of national unity—a unity of grief and a unity of resolve. And we pray that God will continue to watch over and bless America.

NOW, THEREFORE, I, GEORGE W. BUSH, President of the United States of America, by virtue of the authority vested in me by the Constitution and laws of the United States, do hereby proclaim Friday, September 10, through Sunday, September 12, 2004, as National Days of Prayer and Remembrance. I ask that the people of the United States and places of worship mark these National Days of Prayer and Remembrance with memorial services, the ringing of bells, and evening candlelight remembrance vigils. I invite the people of the world to share in these Days of Prayer and Remembrance.

IN WITNESS WHEREOF, I have hereunto set my hand this tenth day of September, in the year of our Lord two thousand four, and of the Independence of the United States of America the two hundred and twenty-ninth.

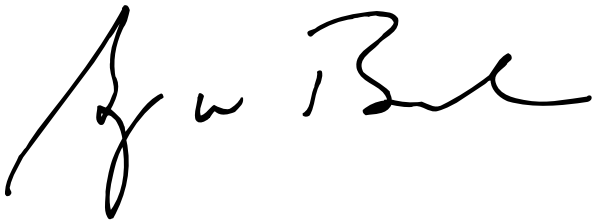

[FR Doc. 04–20950
Filed 9–14–04; 9:09 am]
Billing code 3195–01–P

Presidential Documents

Proclamation 7812 of September 10, 2004

Patriot Day, 2004

By the President of the United States of America

A Proclamation

Three years ago, our country was ruthlessly attacked, and more than 3,000 innocent people lost their lives. We will always remember the victims: sons and daughters, husbands and wives, dads and moms, family members, co-workers, and friends. And we will always be inspired by the heroism and decency of our fellow citizens on that day. Police, firefighters, emergency rescue personnel, doctors, nurses, and many others risked their own lives to save the lives of their fellow citizens. They demonstrated the great character and bravery of our Nation, and they embody the great spirit of America.

Since September 11th, America has fought a relentless war on terror around the world. We are staying on the offensive in this war—striking the terrorists abroad so we do not have to face them here at home. We pray that God watch over our brave men and women in uniform and all who are waging this war and working to keep America safe. And we pray for their families. In the face of danger, America is showing its character. Three years after the attack on our country, Americans remain strong and resolute, patient in a just cause, and confident of the victory to come.

By a joint resolution approved December 18, 2001 (Public Law 107–89), the Congress has designated September 11 of each year as ''Patriot Day.''

NOW, THEREFORE, I, GEORGE W. BUSH, President of the United States of America, do hereby proclaim September 11, 2004, as Patriot Day. I call upon the Governors of the United States and the Commonwealth of Puerto Rico, as well as appropriate officials of all units of government, to direct that the flag be flown at half-staff on Patriot Day. I call upon the people of the United States to observe Patriot Day with appropriate ceremonies and activities, including remembrance services, to display the flag at half-staff from their homes on that day, and to observe a moment of silence beginning at 8:46 a.m. eastern daylight time to honor the innocent victims who lost their lives as a result of the terrorist attacks of September 11, 2001.

IN WITNESS WHEREOF, I have hereunto set my hand this tenth day of September, in the year of our Lord two thousand four, and of the Independence of the United States of America the two hundred and twenty-ninth.

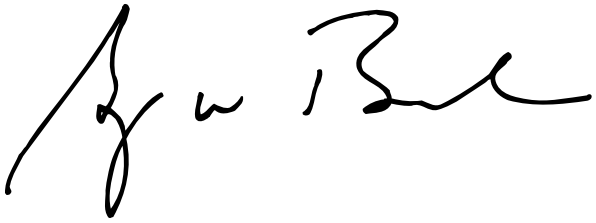

[FR Doc. 04–20951
Filed 9–14–04; 9:09 am]
Billing code 3195–01–P

Reader Aids

Federal Register

Vol. 69, No. 178

Wednesday, September 15, 2004

CUSTOMER SERVICE AND INFORMATION

Federal Register/Code of Federal Regulations	
General Information, indexes and other finding aids	**202–741–6000**
Laws	**741–6000**
Presidential Documents	
Executive orders and proclamations	**741–6000**
The United States Government Manual	**741–6000**
Other Services	
Electronic and on-line services (voice)	**741–6020**
Privacy Act Compilation	**741–6064**
Public Laws Update Service (numbers, dates, etc.)	**741–6043**
TTY for the deaf-and-hard-of-hearing	**741–6086**

ELECTRONIC RESEARCH

World Wide Web

Full text of the daily Federal Register, CFR and other publications is located at: **http://www.gpoaccess.gov/nara/index.html**

Federal Register information and research tools, including Public Inspection List, indexes, and links to GPO Access are located at: **http://www.archives.gov/federal_register/**

E-mail

FEDREGTOC-L (Federal Register Table of Contents LISTSERV) is an open e-mail service that provides subscribers with a digital form of the Federal Register Table of Contents. The digital form of the Federal Register Table of Contents includes HTML and PDF links to the full text of each document.

To join or leave, go to **http://listserv.access.gpo.gov** and select *Online mailing list archives, FEDREGTOC-L, Join or leave the list (orchange settings);* then follow the instructions.

PENS (Public Law Electronic Notification Service) is an e-mail service that notifies subscribers of recently enacted laws.

To subscribe, go to **http://listserv.gsa.gov/archives/publaws-l.html** and select *Join or leave the list* (or change settings); then follow the instructions.

FEDREGTOC-L and **PENS** are mailing lists only. We cannot respond to specific inquiries.

Reference questions. Send questions and comments about the Federal Register system to: **fedreg.info@nara.gov**

The Federal Register staff cannot interpret specific documents or regulations.

FEDERAL REGISTER PAGES AND DATE, SEPTEMBER

53335–53602 1
53603–53790 2
53791–53998 3
53999–54192 7
54193–54556 8
54557–54748 9
54749–55060 10
55061–55314 13
55315–55498 14
55499–55718 15

CFR PARTS AFFECTED DURING SEPTEMBER

At the end of each month, the Office of the Federal Register publishes separately a List of CFR Sections Affected (LSA), which lists parts and sections affected by documents published since the revision date of each title.

3 CFR

Proclamations:
7463 (See Notice of September 10, 2004) 55313
7807 54737
7808 54739
7809 55711
7810 55713
7811 55715
7812 55717

Executive Orders:
12333 (See EO 13354) 53589
12333 (Amended by EO 13355) 53593
12333 (See EO 13356) 53599
12958 (See EO 13354) 53589
12958 (See EO 13356) 53599
13223 (See Notice of September 10, 2004) 55313
13235 (See Notice of September 10, 2004) 55313
13253 (See Notice of September 10, 2004) 55313
13286 (See Notice of September 10, 2004) 55313
13311 (See EO 13356) 53599
13353 53585
13354 53589
13355 53593
13356 53599

Administrative Orders:
Notices:
Notice of September 10, 2004 55313
Presidential Determinations:
No. 2004–45 of September 10, 2004 55497

7 CFR

59 53784
226 53502
301 .....53335, 55315
457 .....53500, 54179
916 53791
917 53791
920 54193
924 54199
1435 55061

Proposed Rules:
784 54049

8 CFR

215 53603
235 53603
252 53603

12 CFR

Proposed Rules:
615 55362

14 CFR

21 53335
39 .....53336, 53603, 53605, 53607, 53609, 53794, 53999, 54201, 54204, 54206, 54211, 54213, 54557, 55320, 55321, 55323, 55326, 55329
71 .....53614, 53976, 54000, 54749, 54750, 55499
73 .....53795, 53796
91 53337
97 53798

Proposed Rules:
23 55367
25 53841
39 .....53366, 53655, 53658, 53846, 53848, 53853, 53855, 53858, 54053, 54055, 54058, 54060, 54065, 54250, 54596, 55120, 55369
71 .....53661, 53860, 53861, 54758

15 CFR

801 54751

16 CFR

305 .....54558, 55063
309 55332

Proposed Rules:
436 53661

17 CFR

200 54182
240 54182
270 54728

Proposed Rules:
37 53367
38 53367
210 53550
240 53550
249 53550

18 CFR

342 53800

19 CFR

122 54179

20 CFR

422 55065

21 CFR

20 53615

201 53801
522 ....53617, 53618
1301 55343
Proposed Rules:
20 53662

22 CFR

22 53618

23 CFR

630 54562

24 CFR

24 53978
236 53558

26 CFR

1 ....53804, 55499
Proposed Rules:
1 ....53373, 53664, 54067
26 53862
301 54067

28 CFR

549 53804

29 CFR

1915 55668
4022 55500
4044 55500
Proposed Rules:
1210 53373

30 CFR

204 55076
914 55347
920 55353
943 55356
Proposed Rules:
917 55373
946 55375

31 CFR

1 54002
356 53619
Proposed Rules:
356 54251

32 CFR

199 55358

33 CFR

100 54572
117 ....53337, 53805, 54572
165 ....54215, 54573, 55502
277 54215
Proposed Rules:
100 ....53373, 54598
117 53376
165 ....55122, 55125

36 CFR

7 ....53626, 53630
292 55092
1254 55505
Proposed Rules:
7 54072
294 54600
1228 54091

37 CFR

1 55505
41 55505

38 CFR

19 53807
20 53807

39 CFR

111 ....53641, 53808, 54005
310 54006
320 54006
501 55506
Proposed Rules:
111 ....53664, 53665, 53666

40 CFR

52 ....53778, 53835, 52006, 54019, 54216, 54574, 54575
62 54753
63 ....53338, 53980, 55218
70 54244
170 53341
180 55506
239 54756
258 54756
432 54476
761 54025
1620 55512
Proposed Rules:
16 55377
51 53378
52 ....54097, 54600, 54601, 55386
62 54759
63 ....53380, 53987
70 54254
85 54846
86 54846
89 54846
90 54846
91 54846
92 54846
94 54846
136 55547
166 53866
239 54760
258 54760
312 54097
1039 54846
1048 54846
1051 54846
1065 54846
1068 54846

43 CFR

Proposed Rules:
25 54602

44 CFR

64 53835
201 55094
206 55094

45 CFR

160 55515

46 CFR

67 53838
221 54247
296 54347

47 CFR

0 55097
1 ....55097, 55516
2 54027
5 54581
15 54027
22 55516
24 55516
25 ....53838, 54037, 54581, 55516
32 53645
51 ....53645, 54589, 55111
54 55097
64 53346
65 53645
73 ....53352, 55112, 55517
97 54581
Proposed Rules:
51 55128
64 53382
73 ....54612, 54613, 54614, 54760, 54761, 54762, 55547

48 CFR

1871 53652
Proposed Rules:
19 53780
52 53780

49 CFR

106 54042
107 54042
171 ....53352, 54042, 55113
172 ....54042, 55113
173 ....54042, 55113
178 54042
179 54042
180 54042
192 ....54248, 54591
195 54591
541 53354
571 ....54249, 55517, 55531
Proposed Rules:
10 53385
229 54255
395 53386
571 ....54255, 55548
572 55550
1507 54256

50 CFR

20 ....53564, 53990
31 54350
32 54350
216 55288
600 53359
635 53359
648 ....53359, 53839, 54593
660 ....53359, 53362, 54047, 55360
679 ....53359, 53364, 53653, 54594, 55361
Proposed Rules:
221 54615
223 54620
224 ....54620, 55135
648 55388
679 53397
680 53397

REMINDERS

The items in this list were editorially compiled as an aid to Federal Register users. Inclusion or exclusion from this list has no legal significance.

RULES GOING INTO EFFECT SEPTEMBER 15, 2004

AGRICULTURE DEPARTMENT

Agricultural Marketing Service

Grapes grown in—

California; published 8-16-04

Onions (sweet) grown in—

Oregon and Washington; published 8-16-04

Raisins produced from grapes grown in—

California; published 8-16-04

ENVIRONMENTAL PROTECTION AGENCY

Pesticides; tolerances in food, animal feeds, and raw agricultural commodities:

Thiamethoxam; published 9-15-04

FEDERAL COMMUNICATIONS COMMISSION

Radio stations; table of assignments:

Michigan; published 9-15-04

HEALTH AND HUMAN SERVICES DEPARTMENT

Health insurance reform:

Civil money penalties; investigations procedures, penalties imposition, and hearings; published 9-15-04

POSTAL SERVICE

Postage meters:

Rented postage meters; cautionary label requirements; published 9-15-04

TREASURY DEPARTMENT

Internal Revenue Service

Income taxes:

Duplicate Forms 5472; electronic filing; published 9-15-04

COMMENTS DUE NEXT WEEK

AGRICULTURE DEPARTMENT

Agricultural Marketing Service

Cotton classing, testing and standards:

Classification services to growers; 2004 user fees; Open for comments until further notice; published 5-28-04 [FR 04-12138]

AGRICULTURE DEPARTMENT

Animal and Plant Health Inspection Service

Exportation and importation of animals and animal products:

Tuberculosis in cattle; import requirements; comments due by 9-20-04; published 7-20-04 [FR 04-16282]

AGRICULTURE DEPARTMENT

Commodity Credit Corporation

Loan and purchase programs:

Conservation Security Program; comments due by 9-20-04; published 6-21-04 [FR 04-13745]

AGRICULTURE DEPARTMENT

Natural Resources Conservation Service

Loan and purchase programs:

Conservation Security Program; comments due by 9-20-04; published 6-21-04 [FR 04-13745]

COMMERCE DEPARTMENT

International Trade Administration

Steel Import Monitoring and Analysis system; comments due by 9-24-04; published 8-25-04 [FR 04-19490]

COMMERCE DEPARTMENT

National Oceanic and Atmospheric Administration

Fishery conservation and management:

West Coast States and Western Pacific fisheries—

West Coast salmon; comments due by 9-22-04; published 9-7-04 [FR 04-20235]

COURT SERVICES AND OFFENDER SUPERVISION AGENCY FOR THE DISTRICT OF COLUMBIA

Semi-annual agenda; Open for comments until further notice; published 12-22-03 [FR 03-25121]

DEFENSE DEPARTMENT

Federal Acquisition Regulation (FAR):

Performance-based service acquisition; comments due by 9-20-04; published 7-21-04 [FR 04-16534]

DEFENSE DEPARTMENT

Engineers Corps

Danger zones and restricted areas:

Fort Wainwright, AK; Small Arms Complex; comments due by 9-22-04; published 8-23-04 [FR 04-19229]

ENERGY DEPARTMENT

Energy Efficiency and Renewable Energy Office

Consumer products; energy conservation program:

Energy conservation standards—-

Commercial packaged boilers; test procedures and efficiency standards; Open for comments until further notice; published 12-30-99 [FR 04-17730]

ENERGY DEPARTMENT

Federal Energy Regulatory Commission

Electric rate and corporate regulation filings:

Virginia Electric & Power Co. et al.; Open for comments until further notice; published 10-1-03 [FR 03-24818]

ENVIRONMENTAL PROTECTION AGENCY

Air programs; approval and promulgation; State plans for designated facilities and pollutants:

Iowa; comments due by 9-23-04; published 8-24-04 [FR 04-19335]

Air quality implementation plans; approval and promulgation; various States:

Missouri; comments due by 9-23-04; published 8-24-04 [FR 04-19337]

Utah; comments due by 9-20-04; published 8-19-04 [FR 04-18935]

Virginia; comments due by 9-24-04; published 8-25-04 [FR 04-19432]

Environmental statements; availability, etc.:

Coastal nonpoint pollution control program—

Minnesota and Texas; Open for comments until further notice; published 10-16-03 [FR 03-26087]

Pesticides; tolerances in food, animal feeds, and raw agricultural commodities:

Acequinocyl, etc.; comments due by 9-20-04; published 7-21-04 [FR 04-16213]

Bitertanol, chlorpropham, cloprop, combustion product gas, cyanazine, etc.; comments due by 9-21-04; published 7-23-04 [FR 04-16718]

Casein et al.; comments due by 9-20-04; published 7-21-04 [FR 04-16214]

Superfund program:

National oil and hazardous substances contingency plan—

National priorities list update; comments due by 9-20-04; published 8-20-04 [FR 04-18965]

National priorities list update; comments due by 9-20-04; published 8-20-04 [FR 04-18966]

Water pollution; effluent guidelines for point source categories:

Meat and poultry products processing facilities; Open for comments until further notice; published 9-8-04 [FR 04-12017]

FEDERAL COMMUNICATIONS COMMISSION

Digital television stations; table of assignments:

Montana; comments due by 9-23-04; published 8-5-04 [FR 04-17902]

Washington; comments due by 9-20-04; published 8-2-04 [FR 04-17246]

Radio stations; table of assignments:

Kentucky and Wisconsin; comments due by 9-20-04; published 8-10-04 [FR 04-18261]

Television stations; table of assignments:

Alabama; comments due by 9-20-04; published 8-3-04 [FR 04-17677]

FEDERAL DEPOSIT INSURANCE CORPORATION

Community Reinvestment Act; implementation:

Community development criterion for small banks; small banks and community development definitions; comments due by 9-20-04; published 8-20-04 [FR 04-19021]

GENERAL SERVICES ADMINISTRATION

Federal Acquisition Regulation (FAR):

Performance-based service acquisition; comments due by 9-20-04; published 7-21-04 [FR 04-16534]

HEALTH AND HUMAN SERVICES DEPARTMENT

Centers for Medicare & Medicaid Services

Medicare:

Civil money penalties, assessments, exclusions

and related appeals procedures; comments due by 9-21-04; published 7-23-04 [FR 04-16791]

Physician fee schedule (2005 CY); payment policies and relative value units; comments due by 9-24-04; published 8-5-04 [FR 04-17312]

HEALTH AND HUMAN SERVICES DEPARTMENT

Food and Drug Administration

Medical devices:

Anesthesiology devices—

Indwelling blood oxyhemoglobin concentration analyzer; premarket approval requirement effective date; comments due by 9-21-04; published 6-23-04 [FR 04-14126]

Reports and guidance documents; availability, etc.:

Evaluating safety of antimicrobial new animal drugs with regard to their microbiological effects on bacteria of human health concern; Open for comments until further notice; published 10-27-03 [FR 03-27113]

Medical devices—

Dental noble metal alloys and base metal alloys; Class II special controls; Open for comments until further notice; published 8-23-04 [FR 04-19179]

HOMELAND SECURITY DEPARTMENT

Coast Guard

Anchorage regulations:

Maryland; Open for comments until further notice; published 1-14-04 [FR 04-00749]

Regattas and marine parades:

World Championship Super Boat Race; comments due by 9-24-04; published 9-9-04 [FR 04-20456]

HOMELAND SECURITY DEPARTMENT

Citizenship and Immigration Services Bureau

Immigration:

Health care workers from Canada and Mexico; extension of deadline to obtain certifications; comments due by 9-20-04; published 7-22-04 [FR 04-16709]

HOUSING AND URBAN DEVELOPMENT DEPARTMENT

Public and Indian housing:

Supportive Housing Program; comments due by 9-20-04; published 7-20-04 [FR 04-16390]

INTERIOR DEPARTMENT

Land Management Bureau

Land use plans:

Cooperating agency status; comments due by 9-20-04; published 7-20-04 [FR 04-16224]

INTERIOR DEPARTMENT

Fish and Wildlife Service

Endangered and threatened species permit applications

Recovery plans—

Paiute cutthroat trout; Open for comments until further notice; published 9-10-04 [FR 04-20517]

Endangered and threatened species:

Critical habitat designations—

Santa Ana sucker; comments due by 9-20-04; published 8-19-04 [FR 04-18987]

INTERIOR DEPARTMENT

Minerals Management Service

Royalty management:

Gas produced from Federal leases; valuation provisions; comments due by 9-21-04; published 7-23-04 [FR 04-16725]

NATIONAL AERONAUTICS AND SPACE ADMINISTRATION

Federal Acquisition Regulation (FAR):

Performance-based service acquisition; comments due by 9-20-04; published 7-21-04 [FR 04-16534]

NATIONAL MEDIATION BOARD

Arbitration programs administration; comments due by 9-20-04; published 9-1-04 [FR 04-19878]

NUCLEAR REGULATORY COMMISSION

Environmental statements; availability, etc.:

Fort Wayne State Developmental Center; Open for comments until further notice; published 5-10-04 [FR 04-10516]

SECURITIES AND EXCHANGE COMMISSION

Investment advisers:

Broker-dealers deemed not to be investment advisers; comments due by 9-22-04; published 8-20-04 [FR 04-19258]

SMALL BUSINESS ADMINISTRATION

Disaster loan areas:

Maine; Open for comments until further notice; published 2-17-04 [FR 04-03374]

SOCIAL SECURITY ADMINISTRATION

Social security benefits, special veterans benefits, and supplemental security income:

Federal old age, survivors, and disability insurance, and aged, blind, and disabled—

Cross-program recovery of benefit overpayments; expanded authority; comments due by 9-23-04; published 8-24-04 [FR 04-19321]

STATE DEPARTMENT

Consular services; fee schedule; comments due by 9-24-04; published 9-2-04 [FR 04-20043]

OFFICE OF UNITED STATES TRADE REPRESENTATIVE

Trade Representative, Office of United States

Generalized System of Preferences:

2003 Annual Product Review, 2002 Annual Country Practices Review, and previously deferred product decisions; petitions disposition; Open for comments until further notice; published 7-6-04 [FR 04-15361]

TRANSPORTATION DEPARTMENT

Federal Aviation Administration

Airworthiness directives:

Boeing; comments due by 9-20-04; published 8-4-04 [FR 04-17763]

Bombardier Inc.; comments due by 9-21-04; published 7-29-04 [FR 04-17285]

Hartzell Propeller Inc.; comments due by 9-20-04; published 7-22-04 [FR 04-16662]

McDonnell Douglas; comments due by 9-20-04; published 8-5-04 [FR 04-17859]

Ostmecklenburgische Flugzeugbau GmbH; comments due by 9-22-04; published 8-18-04 [FR 04-18927]

Pilatus Aircraft Ltd.; comments due by 9-22-04; published 8-20-04 [FR 04-19158]

TRANSPORTATION DEPARTMENT

Federal Motor Carrier Safety Administration

Motor carrier safety standards:

Waivers, exemptions, and pilot programs; procedures and requirements; comments due by 9-20-04; published 8-20-04 [FR 04-19155]

TRANSPORTATION DEPARTMENT

Federal Railroad Administration

Occupational noise exposure; railroad operating employees; comments due by 9-21-04; published 6-23-04 [FR 04-13582]

TREASURY DEPARTMENT

Internal Revenue Service

Income taxes:

Adjustment to net unrealized built-in gain; comments due by 9-23-04; published 6-25-04 [FR 04-14391]

Stock held by foreign insurance companies; comments due by 9-23-04; published 6-25-04 [FR 04-14392]

TREASURY DEPARTMENT

Currency and foreign transactions; financial reporting and recordkeeping requirements:

Bank Secrecy Act; implementation—

First Merchant Bank OSH Ltd., et al.; special measures imposition due to designation as primary money laundering concern; comments due by 9-23-04; published 8-24-04 [FR 04-19267]

Infobank; special measures imposition due to designation as institution of primary money laundering concern; comments due by 9-23-04; published 8-24-04 [FR 04-19266]

LIST OF PUBLIC LAWS

This is a continuing list of public bills from the current session of Congress which have become Federal laws. It may be used in conjunction with "P L U S" (Public Laws Update Service) on 202–741–6043. This list is also available online at *http://www.archives.gov/federal_register/public_laws/public_laws.html.*

The text of laws is not published in the **Federal Register** but may be ordered in ''slip law'' (individual pamphlet) form from the Superintendent of Documents, U.S. Government Printing Office, Washington, DC 20402 (phone, 202–512–1808). The text will also be made available on the Internet from GPO Access at *http://www.gpoaccess.gov/plaws/index.html*. Some laws may not yet be available.

H.R. 5005/P.L. 108–303
Emergency Supplemental Appropriations for Disaster Relief Act, 2004 (Sept. 8, 2004; 118 Stat. 1124)
Last List August 18, 2004

Public Laws Electronic Notification Service (PENS)

PENS is a free electronic mail notification service of newly enacted public laws. To subscribe, go to *http://listserv.gsa.gov/archives/publaws-l.html*

Note: This service is strictly for E-mail notification of new laws. The text of laws is not available through this service. **PENS** cannot respond to specific inquiries sent to this address.