AUTHENTICATED U.S. GOVERNMENT INFORMATION GPO

Federal Register

7–29–04 Thursday
Vol. 69 No. 145 July 29, 2004

Pages 45225–45554

The **FEDERAL REGISTER** (ISSN 0097–6326) is published daily, Monday through Friday, except official holidays, by the Office of the Federal Register, National Archives and Records Administration, Washington, DC 20408, under the Federal Register Act (44 U.S.C. Ch. 15) and the regulations of the Administrative Committee of the Federal Register (1 CFR Ch. I). The Superintendent of Documents, U.S. Government Printing Office, Washington, DC 20402 is the exclusive distributor of the official edition. Periodicals postage is paid at Washington, DC.

The **FEDERAL REGISTER** provides a uniform system for making available to the public regulations and legal notices issued by Federal agencies. These include Presidential proclamations and Executive Orders, Federal agency documents having general applicability and legal effect, documents required to be published by act of Congress, and other Federal agency documents of public interest.

Documents are on file for public inspection in the Office of the Federal Register the day before they are published, unless the issuing agency requests earlier filing. For a list of documents currently on file for public inspection, *www.archives.gov.*

The seal of the National Archives and Records Administration authenticates the Federal Register as the official serial publication established under the Federal Register Act. Under 44 U.S.C. 1507, the contents of the **Federal Register** shall be judicially noticed.

The **Federal Register** is published in paper and on 24x microfiche. It is also available online at no charge as one of the databases on GPO Access, a service of the U.S. Government Printing Office.

The online edition of the **Federal Register** *www.gpoaccess.gov/nara,* available through GPO Access, is issued under the authority of the Administrative Committee of the Federal Register as the official legal equivalent of the paper and microfiche editions (44 U.S.C. 4101 and 1 CFR 5.10). It is updated by 6 a.m. each day the **Federal Register** is published and includes both text and graphics from Volume 59, Number 1 (January 2, 1994) forward.

For more information about GPO Access, contact the GPO Access User Support Team, call toll free 1-888-293-6498; DC area 202-512-1530; fax at 202-512-1262; or via email at *gpoaccess@gpo.gov.* The Support Team is available between 7:00 a.m. and 9:00 p.m. Eastern Time, Monday–Friday, except official holidays.

The annual subscription price for the **Federal Register** paper edition is $749 plus postage, or $808, plus postage, for a combined **Federal Register, Federal Register** Index and List of CFR Sections Affected (LSA) subscription; the microfiche edition of the **Federal Register** including the **Federal Register** Index and LSA is $165, plus postage. Six month subscriptions are available for one-half the annual rate. The prevailing postal rates will be applied to orders according to the delivery method requested. The price of a single copy of the daily **Federal Register,** including postage, is based on the number of pages: $11 for an issue containing less than 200 pages; $22 for an issue containing 200 to 400 pages; and $33 for an issue containing more than 400 pages. Single issues of the microfiche edition may be purchased for $3 per copy, including postage. Remit check or money order, made payable to the Superintendent of Documents, or charge to your GPO Deposit Account, VISA, MasterCard, American Express, or Discover. Mail to: New Orders, Superintendent of Documents, P.O. Box 371954, Pittsburgh, PA 15250-7954; or call toll free 1-866-512-1800, DC area 202-512-1800; or go to the U.S. Government Online Bookstore site, *bookstore@gpo.gov.*

There are no restrictions on the republication of material appearing in the **Federal Register.**

How To Cite This Publication: Use the volume number and the page number. Example: 69 FR 12345.

Postmaster: Send address changes to the Superintendent of Documents, Federal Register, U.S. Government Printing Office, Washington DC 20402, along with the entire mailing label from the last issue received.

SUBSCRIPTIONS AND COPIES

PUBLIC

Subscriptions:

Paper or fiche	**202–512–1800**
Assistance with public subscriptions	**202–512–1806**

General online information **202–512–1530; 1–888–293–6498**

Single copies/back copies:

Paper or fiche	**202–512–1800**
Assistance with public single copies	**1–866–512–1800 (Toll-Free)**

FEDERAL AGENCIES

Subscriptions:

Paper or fiche	**202–741–6005**
Assistance with Federal agency subscriptions	**202–741–6005**

What's NEW!

Federal Register Table of Contents via e-mail

Subscribe to FEDREGTOC, to receive the **Federal Register** Table of Contents in your e-mail every day.

If you get the HTML version, you can click directly to any document in the issue.

To subscribe, go to **http://listserv.access.gpo.gov** and select:

Online mailing list archives
FEDREGTOC-L
Join or leave the list

Then follow the instructions.

What's NEW!

Regulations.gov, the award-winning Federal eRulemaking Portal

Regulations.gov is the one-stop U.S. Government web site that makes it easy to participate in the regulatory process.

Try this fast and reliable resource to find all rules published in the *Federal Register* that are currently open for public comment. Submit comments to agencies by filling out a simple web form, or use available email addresses and web sites.

The Regulations.gov e-democracy initiative is brought to you by NARA, GPO, EPA and their eRulemaking partners.

Visit the web site at: **http://www.regulations.gov**

Printed on recycled paper.

Contents

Federal Register

Vol. 69, No. 145

Thursday, July 29, 2004

Agricultural Marketing Service
RULES
Apricots and cherries (sweet) grown in—
Washington, 45233–45236
Oranges and grapefruit grown in—
Texas, 45231–45233

Agricultural Research Service
NOTICES
Patent licenses; non-exclusive, exclusive, or partially exclusive:
Genencor International, Inc., 45304
Schering-Plough Animal Health Corp., 45304

Agriculture Department
See Agricultural Marketing Service
See Agricultural Research Service
See Food and Nutrition Service
See Forest Service

Alcohol and Tobacco Tax and Trade Bureau
NOTICES
Agency information collection activities; proposals, submissions, and approvals, 45372–45373

Army Department
See Engineers Corps
NOTICES
Environmental statements; record of decision:
Alaska; 172nd Infantry Brigade (Separate); force transformation to Stryker Brigade Combat Team, 45308–45309

Centers for Disease Control and Prevention
NOTICES
Grant and cooperative agreement awards:
Treatment and Research AIDS Center, 45321–45322
Grants and cooperative agreements; availability, etc.:
Human immunodeficiency virus (HIV)—
Botswana; psychosocial support and peer counseling service to HIV-infected women and their families; expansion; correction, 45334–45335
Central American region; expanded HIV/AIDS surveillance, monitoring, evaluation, and information management activities, 45326–45330
Haiti; voluntary counseling and testing and prevention of mother-to-child transmission programs, 45322–45326
Uganda; Full Access Home-Based Voluntary Counseling and Testing Program, 45330–45334
Meetings:
National Institute for Occupational Safety and Health—
Radiation and Worker Health Advisory Board, 45335

Centers for Medicare & Medicaid Services
See Inspector General Office, Health and Human Services Department

Coast Guard
RULES
Ports and waterways safety:
Cleveland Harbor, OH; security zone, 45257–45258
Lake Eustis, FL; safety zone, 45255–45257
NOTICES
Environmental statements; notice of intent:
Main Pass Energy Hub LLC Liquefied Natural Gas Deepwater Port, LA; license application; meetings, 45337–45339
Meetings:
Merchant Marine Personnel Advisory Committee, 45339

Commerce Department
See Economic Development Administration
See National Oceanic and Atmospheric Administration

Corporation for National and Community Service
NOTICES
Agency information collection activities; proposals, submissions, and approvals, 45308

Defense Department
See Army Department
See Engineers Corps

Economic Development Administration
NOTICES
Trade adjustment assistance eligibility determination petitions:
Engine Monitor, Inc., et al., 45305–45306

Energy Department
See Energy Efficiency and Renewable Energy Office

Energy Efficiency and Renewable Energy Office
PROPOSED RULES
Consumer products; energy conservation program:
Energy conservation standards and test procedures—
Distribution transformers; meeting, 45375–45417
Residential furnaces and boilers; meeting, 45419–45457
Energy conservation:
Commercial and industrial equipment; energy efficiency program—
Commercial unitary air conditioners and heat pumps; meeting, 45459–45503
Distribution transformers; test procedures; meeting, 45505–45534

Engineers Corps
RULES
Danger zones and restricted areas:
Mobile, AL; Coast Guard Base Mobile Docks, 45258–45259
PROPOSED RULES
Danger zones and restricted areas:
Beaufort, SC; Brickyard Creek and tributaries, and Broad River; Marine Corps Air Station, 45298–45300

Environmental Protection Agency
RULES
Air pollution control:
State operating permits programs—
Iowa, 45277–45278
Kansas, 45275–45277

PROPOSED RULES
Air pollution control:
State operating permits programs—
Iowa, 45300–45301
Kansas, 45300
NOTICES
Agency information collection activities; proposals, submissions, and approvals, 45309–45314
Committees; establishment, renewal, termination, etc.:
Science Advisory Board, 45314–45315
Meetings:
Second drinking water Contaminant Candidate List; regulatory determinations; Unregulated Contaminant Monitoring Project updates and CCL3 development, 45315–45316

Executive Office of the President
See Management and Budget Office
See Trade Representative, Office of United States

Federal Aviation Administration
RULES
Airworthiness directives:
Airbus, 45241–45246
McDonnell Douglas, 45239–45241
Rolls-Royce plc; correction, 45246
PROPOSED RULES
Airworthiness directives:
Bombardier Inc., 45293–45295
General Electric Co., 45295–45297
MD Helicopters, Inc., 45291–45293

Federal Communications Commission
PROPOSED RULES
Digital television stations; table of assignments:
Colorado, 45301
Radio stations; table of assignments:
Nebraska, 45301–45302
Utah, 45302–45303
NOTICES
Agency information collection activities; proposals, submissions, and approvals, 45316–45320

Financial Management Service
See Fiscal Service

Fiscal Service
NOTICES
Agency information collection activities; proposals, submissions, and approvals, 45373

Fish and Wildlife Service
NOTICES
Agency information collection activities; proposals, submissions, and approvals, 45341–45342
Endangered and threatened species and marine mammal permit applications, 45342–45343
Endangered and threatened species permit applications, 45343–45344

Food and Drug Administration
NOTICES
Medical devices:
Patent extension; regulatory review period determinations—
LEA'S SHIELD, 45335–45336
Reports and guidance documents; availability, etc.:
Radionuclides in domestic and imported foods; guidance levels, 45336–45337

Food and Nutrition Service
RULES
Food stamp and food distribution program:
Vehicle and maximum excess shelter expense deduction; benefits adjustment, 45225–45231

Foreign Assets Control Office
RULES
Zimbabwe sanctions regulations, 45246–45255

Forest Service
NOTICES
Meetings:
Resource Advisory Committees—
Lincoln County, 45304
Madera County, 45305
North Gifford Pinchot National Forest, 45305

Health and Human Services Department
See Centers for Disease Control and Prevention
See Food and Drug Administration
See Inspector General Office, Health and Human Services Department
NOTICES
Agency information collection activities; proposals, submissions, and approvals, 45320–45321
Meetings:
Vital and Health Statistics National Committee, 45321

Homeland Security Department
See Coast Guard

Housing and Urban Development Department
NOTICES
Agency information collection activities; proposals, submissions, and approvals, 45339–45341

Inspector General Office, Health and Human Services Department
NOTICES
Program exclusions; list; correction, 45337

Interior Department
See Fish and Wildlife Service
See Land Management Bureau
See National Park Service

Justice Department
NOTICES
Agency information collection activities; proposals, submissions, and approvals, 45346–45347
Senior Executive Service:
Performance Review Boards; membership, 45347–45350

Land Management Bureau
NOTICES
Meetings:
Resource Advisory Councils—
John Day/Snake, 45344

Management and Budget Office
RULES
Human resource management:
Executive performance and accountability, 45547–45554

Maritime Administration
NOTICES
Environmental statements; availability, etc.:
James River Reserve Fleet, VA; transfer and disposal of obsolete vessels in United Kingdom, 45370

Environmental statements; notice of intent:
Main Pass Energy Hub LLC Liquefied Natural Gas Deepwater Port, LA; license application; meetings, 45337–45339

National Aeronautics and Space Administration
NOTICES
Environmental statements; availability, etc.:
Outrigger Telescopes Project, Mauna Kea, HI, 45350–45352
Inventions, Government-owned; availability for licensing, 45352
Patent licenses; non-exclusive, exclusive, or partially exclusive:
PAC Materials, L.L.C., 45352

National Credit Union Administration
RULES
Credit unions:
Community Development Revolving Loan Program, 45236–45237
Health savings accounts; Federal credit unions acting as trustees and custodians, 45237–45239
Share insurance and appendix—
Living trust accounts, 45239
PROPOSED RULES
Credit unions:
Mergers of federally-insured credit unions; voluntary termination or conversion of insured status; communication and disclosure requirements, 45279–45291

National Highway Traffic Safety Administration
NOTICES
Agency information collection activities; proposals, submissions, and approvals, 45370–45372
Motor vehicle safety standards:
Exemption petitions, etc.—
Baby Trend, Inc., 45372

National Oceanic and Atmospheric Administration
NOTICES
Committees; establishment, renewal, termination, etc.:
Commercial Remote Sensing Advisory Committee, 45306
Environmental statements; record of decision:
Gulf of Mexico Fishery Management Council; fishery management plans; essential fish habitat requirements, 45307
Permits:
Marine mammals, 45307

National Park Service
NOTICES
Environmental statements; availability, etc.:
Saratoga National Historic Park, NY; general management plan, 45344
Environmental statements; notice of intent:
Kenai Fjords National Park, AK; Exit Glacier Area Plan; terminated, 45344–45345
Environmental statements; record of decision:
Colonial National Historic Park, Green Spring Unit, VA; general management plan, 45345
Realty actions; sales, leases, etc.:
Fredericksburg and Spotsylvania County Battle Fields Memorial National Military Park, VA, 45345–45346

Nuclear Regulatory Commission
NOTICES
Environmental statements; availability, etc.:
South Texas Project Nuclear Operating Co., 45352–45353

Office of Management and Budget
See Management and Budget Office

Office of United States Trade Representative
See Trade Representative, Office of United States

Personnel Management Office
RULES
Performance management:
Executive performance and accountability, 45547–45554
PROPOSED RULES
Senior Executive Service:
Pay and performance awards and aggregate limitation on pay, 45535–45546

Postal Rate Commission
NOTICES
Practice and procedure:
Repositionable notes market test, 45353–45356

Postal Service
RULES
Domestic Mail Manual:
Merged five-digit and five digit scheme pallets for periodicals, standard mail, and package services mail, 45259–45270
Purchasing Manual:
Issue 2; availability, 45270–45275
NOTICES
Meetings; Sunshine Act, 45356

Public Debt Bureau
See Fiscal Service

Securities and Exchange Commission
NOTICES
Options Price Reporting Authority:
Consolidated Options Last Sale Reports and Quotation Information; Reporting Plan; amendments, 45356–45357
Self-regulatory organizations; proposed rule changes:
Chicago Board Options Exchange, Inc., 45357–45358
National Association of Securities Dealers, Inc., 45358–45360
Pacific Exchange, Inc., 45360–45365
Philadelphia Stock Exchange, Inc., 45365–45367

Small Business Administration
NOTICES
Agency information collection activities; proposals, submissions, and approvals, 45367

State Department
NOTICES
Art objects; importation for exhibition:
Ten Masterpieces from the Treasury of the State Hermitage Museum, 45367
Meetings:
Defense Trade Advisory Group, 45367–45368
Shipping Coordinating Committee, 45368–45369

Trade Representative, Office of United States
NOTICES
World Trade Organization:
China; compliance with WTO commitments; hearing, 45369–45370

Transportation Department
See Federal Aviation Administration
See Maritime Administration
See National Highway Traffic Safety Administration

Treasury Department
See Alcohol and Tobacco Tax and Trade Bureau
See Fiscal Service
See Foreign Assets Control Office

Veterans Affairs Department
NOTICES
Inventions, Government-owned; availability for licensing, 45373–45374

Separate Parts In This Issue

Part II
Energy Department, Energy Efficiency and Renewable Energy Office, 45375–45417

Part III
Energy Department, Energy Efficiency and Renewable Energy Office, 45419–45457

Part IV
Energy Department, Energy Efficiency and Renewable Energy Office, 45459–45503

Part V
Energy Department, Energy Efficiency and Renewable Energy Office, 45505–45534

Part VI
Personnel Management Office, 45535–45546

Part VII
Executive Office of the President, Management and Budget Office; Personnel Management Office, 45547–45554

Reader Aids

Consult the Reader Aids section at the end of this issue for phone numbers, online resources, finding aids, reminders, and notice of recently enacted public laws.

To subscribe to the Federal Register Table of Contents LISTSERV electronic mailing list, go to http://listserv.access.gpo.gov and select Online mailing list archives, FEDREGTOC-L, Join or leave the list (or change settings); then follow the instructions.

CFR PARTS AFFECTED IN THIS ISSUE

A cumulative list of the parts affected this month can be found in the Reader Aids section at the end of this issue.

5 CFR
430 45548
1330 45548

Proposed Rules:
451 45536
530 45536
534 45536
575 45536

7 CFR
273 45225
906 45231
922 45233
923 45233

10 CFR

Proposed Rules:
430 (2 documents) 45376, 45420
431 45460
432 45506

12 CFR
705 45236
721 45237
724 45237
745 45239

Proposed Rules:
708b 45279

14 CFR
39 (4 documents) 45239, 45241, 45243, 45246

Proposed Rules:
39 (3 documents) 45291, 45293, 45295

31 CFR
541 45246

33 CFR
165 (2 documents) 45255, 45257
334 45258

Proposed Rules:
334 45298

39 CFR
111 45259
601 45270

40 CFR
70 (2 documents) 45275, 45277

Proposed Rules:
70 (2 documents) 45300

47 CFR

Proposed Rules:
73 (3 documents) 45301, 45302

Rules and Regulations

Federal Register
Vol. 69, No. 145
Thursday, July 29, 2004

This section of the FEDERAL REGISTER contains regulatory documents having general applicability and legal effect, most of which are keyed to and codified in the Code of Federal Regulations, which is published under 50 titles pursuant to 44 U.S.C. 1510.

The Code of Federal Regulations is sold by the Superintendent of Documents. Prices of new books are listed in the first FEDERAL REGISTER issue of each week.

DEPARTMENT OF AGRICULTURE

Food and Nutrition Service

7 CFR Part 273

[Amendment No. 396]

RIN 0584–AD13

Food Stamp Program: Vehicle and Maximum Excess Shelter Expense Deduction Provisions of Public Law 106–387

AGENCY: Food and Nutrition Service, USDA.

ACTION: Final rule.

SUMMARY: This final rule amends Food Stamp Program regulations to implement sections 846 and 847 of the Agriculture, Rural Development, Food and Drug Administration, and Related Agencies Appropriations Act, 2001 (Agriculture Appropriations Act of 2001). The rule allows State agencies the option to use their Temporary Assistance for Needy Families (TANF) Program vehicle allowance rules rather than the vehicle rules ordinarily used in the Food Stamp Program where doing so will result in a lower attribution of resources to food stamp households. The rule also increases the maximum amount of the Food Stamp Program excess shelter expense deduction and indexes it each fiscal year to the Consumer Price Index (CPI) for all Urban Consumers for the 12 month period ending the previous November 30. The rule will increase benefits for some participants, make additional households eligible for food stamps, and provide greater flexibility for States in determining the value of vehicles.

DATES: *Effective Date:* The rule is effective September 27, 2004.

Implementation Date: State agencies were required by statute to implement the maximum excess shelter expense deduction limits contained in section 846 of the Agriculture Appropriations Act of 2001 and reflected in § 273.9(d)(6)(ii) of this final rule when certifying or recertifying households on or after March 1, 2001. Section 847 of the same statute allowed State agencies to begin implementing the vehicle provision at § 273.8(f)(4) of this final rule, at State option, when certifying or recertifying households on or after July 1, 2001.

FOR FURTHER INFORMATION CONTACT: John H. Knaus, Chief, Program Design Branch, Food and Nutrition Service, USDA, 3101 Park Center Drive, Alexandria, Virginia 22302. (703) 305–2098. The e-mail address is *John.Knaus@FNS.USDA.gov.*

SUPPLEMENTARY INFORMATION:

I. Procedural Matters

Executive Order 12866

This final rule has been determined to be economically significant and was reviewed by the Office of Management and Budget in conformance with Executive Order 12866.

Executive Order 12372

The Food Stamp Program (FSP) is listed in the Catalog of Federal Domestic Assistance under No. 10.551. For the reasons set forth in the final rule in 7 CFR 3015, subpart V and related notice (48 FR 29115), the FSP is excluded from the scope of Executive Order 12372, which requires intergovernmental consultation with State and local officials.

Regulatory Flexibility Act

This rule has been reviewed with regard to the requirements of the Regulatory Flexibility Act of 1980 (5 U.S.C. 601–612). Eric M. Bost, Under Secretary for Food, Nutrition, and Consumer Services, has certified that this rule will not have a significant economic impact on a substantial number of small entities. This rule does not regulate the activities of small businesses or other small entities; instead it regulates the administration of the FSP, which is administered only by State or county social service agencies.

Executive Order 12988

This rule has been reviewed under Executive Order 12988, Civil Justice Reform. This rule is intended to have preemptive effect with respect to any State or local laws, regulations or policies which conflict with its provisions or which would otherwise impede its full and timely implementation. Prior to any judicial challenge to the provisions of this rule or the application of its provisions, all applicable administrative procedures must be exhausted.

Paperwork Reduction Act

The paperwork burden associated with the food stamp certification process is approved under OMB control number 0584–0064. The maximum excess shelter expense deduction provisions of this proposed rule would result in no change in the burden for either applicants or State agencies. For applicants and State agencies, the effect of this provision is simply to substitute new maximum deductions for the previous ones.

The vehicle provisions of this rule do not change the paperwork burden on applicants. States that elect to substitute their TANF vehicle rules for their food stamp vehicle rules will experience minor increases or decreases in burden associated with the complexity or simplicity of each case. States that elect to retain the food stamp vehicle rules will experience no change in burden. The Department has concluded that the burden will vary from case to case and State to State but not enough to affect the average total processing time data upon which all burden estimates for food stamp certification (and re-certification) are based.

Federalism Summary Impact Statement

Executive Order 13132 requires Federal agencies to consider the impact of their regulatory actions on State and local governments. We note that all references to State agencies when used in the context of Federalism also refer to local welfare agencies in States in which the FSP is administered by local governments. The Department has considered the impact of this rule on State agencies while drafting the rule. The rule codifies procedures mandated by statute and already implemented under the terms of a guidance memorandum issued on January 4, 2001.

Prior Consultation With State Officials

Prior to drafting this rule, we consulted with State and local agencies at various times. Because the FSP is a State-administered, Federally-funded

program, our regional offices have formal and informal discussions with State and local officials on an ongoing basis regarding program implementation and policy issues. This arrangement allows State and local agencies to provide comments that form the basis for many discretionary decisions in this and other FSP rules. We have also had numerous written requests for policy guidance on the implications of Public Law 106–387 from the State agencies that deliver food stamp services. These questions have helped us make the rule responsive to concerns presented by State agencies.

Nature of Concerns and the Need To Issue This Rule

State agencies generally want greater flexibility in their implementation of FSP asset policy, especially with regard to vehicle ownership. This rule provides much greater flexibility in this area and also addresses another major State concern, the need to conform FSP rules to the rules of other means-tested Federal programs. Specific policy questions submitted by State agencies after enactment of the Agriculture Appropriations Act of 2001, but prior to the promulgation of regulations, helped us identify issues that needed to be clarified in the rule.

Extent to Which We Meet Those Concerns

The Department has considered the impact of this rule on State and local agencies. The rule makes changes that the law required to be implemented in 2001. The effects on State agencies are minimal. While the vehicle provision of the rule requires eligibility workers to make additional computations in some cases, the ability to substitute TANF vehicle rules for FSP vehicle rules, when doing so results in a lower attribution of resources, allows a growing number of States to exclude some or all vehicles from household assets. The maximum excess shelter expense deduction provision simply increases the amount of the deduction and indexes it to the CPI, resulting in no additional requirements for State agencies. In this final rule, we have addressed every question submitted during the comment period by State agencies regarding both of these provisions.

Unfunded Mandate Reform Act of 1995 (UMRA)

Title II of UMRA establishes requirements for Federal agencies to assess the effects of their regulatory actions on State, local, and tribal governments and the private sector. Under § 202 of the UMRA, the Department generally must prepare a written statement, including a cost-benefit analysis, for proposed and final rules with ''Federal mandates'' that may result in expenditures to State, local, or tribal governments in the aggregate, or to the private sector, of $100 million or more in any one year. When such a statement is needed for a rule, § 205 of the UMRA generally requires the Department to identify and consider a reasonable number of regulatory alternatives and adopt the least costly, most cost-effective or least burdensome alternative that achieves the objectives of the rule. This rule contains no Federal mandates (under the regulatory provisions of Title II of the UMRA) for State, local, and tribal governments or the private sector of $100 million or more in any one year. This rule is, therefore, not subject to the requirements of section 202 and section 205 of the UMRA.

Civil Rights Impact Analysis

The Department has reviewed this rule in accordance with the Department Regulation 4300–4, ''Civil Rights Impact Analysis,'' to identify and address any major civil rights impacts the rule might have on minorities, women, and persons with disabilities. After a careful review of the rule's intent and provisions, and the characteristics of food stamp households and individual participants, the Department has determined that there is no adverse effect on any of the protected classes. The Department has minimal discretion in implementing many of these changes. The changes required by law have been implemented. All data available to the Department indicate that protected individuals have the same opportunity to participate in the FSP as non-protected individuals. The Department specifically prohibits the State and local government agencies that administer the program from engaging in actions that discriminate based on race, color, national origin, gender, age, disability, marital or family status. Regulations at 7 CFR 272.6 specifically state that ''State agencies shall not discriminate against any applicant or participant in any aspect of program administration, including, but not limited to, the certification of households, the issuance of coupons, the conduct of fair hearings, or the conduct of any other program service for reasons of age, race, color, sex, handicap, religious creed, national origin, or political beliefs. Discrimination in any aspect of program administration is prohibited by these regulations, the Food Stamp Act, the Age Discrimination Act of 1975 (Pub. L. 94–135), the Rehabilitation Act of 1973 (Pub. L. 93–112, section 504), and title VI of the Civil Rights Act of 1964 (42 U.S.C. 2000d). Enforcement action may be brought under any applicable Federal law. Title VI complaints shall be processed in accord with 7 CFR part 15.'' Where State agencies have options, and they choose to implement a certain provision, they must implement it in such a way that it complies with the regulations at 7 CFR 272.6.

Regulatory Impact Analysis

Need for Action

This action is needed to implement § 846 and § 847 of the Agriculture Appropriations Act of 2001, Public Law 106–387. The rule increases the amounts of the maximum excess shelter expense deductions, and for future years, indexes them to the CPI. It also allows States the option of substituting their TANF vehicle rules for their food stamp vehicle rules when doing so would result in a lower attribution of resources to a household.

Benefits

Section 846 (maximum excess shelter expense deduction provision): this final rule allows a larger income deduction for shelter expenses to those low-income families whose shelter expenses exceed 50 percent of their monthly income, after all other applicable deductions have been made. The Department does not expect raising the excess shelter deduction limit to significantly increase FSP participation. Instead, we estimate that the change will raise benefits for 8.4 percent of current participants. Applying this percentage to the participation projections for the President's Fiscal Year (FY) 2005 budget baseline, we estimate that 1.98 million persons will each receive an average of $6.23 more per month in food stamp benefits in FY 2004, compared to the benefits they would have received if the shelter cap had remained frozen as legislated prior to this provision. These impacts are already incorporated into the President's FY 2005 budget baseline.

Section 847 (vehicle provision): the rule allows food stamp applicants to benefit when State agencies elect to use more expansive TANF vehicle policy rules that will allow them to own a reliable vehicle and still be eligible for food stamps. The Department estimates that this provision will increase average participation in the FSP by 298,000 persons in FY 2004, compared to what participation would have been in its absence. Among those newly eligible, we estimate that their average monthly

food stamp benefit will be $80.71. These impacts are already incorporated into the President's FY 2005 budget baseline. State agencies will benefit from the increased flexibility in program administration afforded by the rule and from an anticipated decrease in payment errors.

Costs

Although the provisions have already been implemented by State agencies, the Department estimates that the cost to the Government of section 846 will be $148 million in FY 2004 and $883 million over the five years, FY 2004 through FY 2008, compared to what costs would have been in its absence. Likewise, the Department estimates that the cost to the Government of section 847 will be $289 million in FY 2004 and $1.527 billion over the five years, FY 2004 through FY 2008, compared to what costs would have been in its absence. These impacts are already incorporated into the President's FY 2005 budget baseline.

II. Background

On August 29, 2003, we published a rule at 68 FR 51932 in which we proposed to amend FSP regulations at 7 CFR 273.8 by adding a new paragraph (f)(4), and at 7 CFR 273.9(d)(6)(ii) by inserting new monthly shelter expense deduction limits mandated by Congress and by indexing future limits to the CPI. We solicited comments on provisions of the proposed rule through October 28, 2003, and received a total of 36 comments of which 28 expressed support for the rule as proposed without making specific suggestions for improvements. This final rule addresses issues raised by the remaining 8 comments.

Vehicle Provisions—7 CFR 273.8(f)(4)

The proposed rule added a new paragraph (f)(4) that explains how State agencies must administer the provision that allows substitution of the vehicle rules from a TANF-funded or TANF Maintenance-of-Effort-funded assistance program for those of the FSP. We received two comments that asked us to use the final rule to eliminate the long-standing equity test for vehicles at 7 CFR 273.8(f). The purpose of this final rule is to implement very specific statutory provisions, not to overhaul existing vehicle policy. Therefore, we will not adopt this suggestion. A commenter asked us to ensure that the final rule states that State agencies must exclude the most valuable vehicle that is not excluded under TANF rules if a TANF exclusion exists. While we agree with this suggestion, we also believe that the rule, as originally proposed, conveys this meaning quite clearly. For this reason, we will not add further details to this provision. The same commenter suggested that the final rule should state clearly that it applies only to vehicles not excluded by food stamp regulations at 7 CFR 273.8(e)(5) and (e)(11). We agree and have added language to this effect. The same commenter asked us to integrate the rule into the existing vehicle rules instead of according it a separate paragraph. The commenter's opinion is that by presenting this State option in a separate paragraph, we appear to suggest that State agencies must compute vehicle valuations twice, once under TANF rules and once under FSP rules. We disagree for two reasons: first, the statute presents this State option as an ''alternative vehicle allowance,'' which suggests to us the intent to offer it to States as a clear option rather than merge it with other aspects of the FSP vehicle rules; second, we issued guidance on January 4, 2001 that closely mirrors the proposed rule and States have long ago worked out their procedures for valuing vehicles under that guidance. As of February 2003, only 9 States had not elected to substitute TANF rules for FSP rules. We think the high level of response to this State option, and the absence of requests for clarification or simplification from the States themselves, shows that the rule as drafted will reduce rather than increase administrative complexities for State agencies.

Another commenter stated that the final rule should permit a State agency to substitute its TANF Fair Market Value (FMV) test for its FSP FMV test even if the TANF rules for that State do not include a FMV test. The comment argued that the absence of any reference to an FMV test is an FMV policy. We disagree. The statute allows the substitution of a State's TANF vehicle rules, as written, for the FSP vehicle rules, not the substitution of an un-stated provision. Under the final rule, this commenter's State may use FSP vehicle rules or the vehicle rules of its TANF program. Another commenter asked how to treat the resources, including vehicles, of a household member disqualified for an intentional program violation. Our view is that a State agency can substitute its TANF vehicle rules for all food stamp rules affecting treatment of vehicles. Therefore, a State agency can exclude from resources vehicles owned by a household member disqualified for an intentional program violation if the State's TANF vehicle rules permit the exclusion. The same interpretation holds for vehicles owned by persons disqualified for drug felony convictions, fleeing felon disqualifications, or workfare or work sanctions.

Maximum Excess Shelter Expense Deduction Provision—7 CFR 273.9(d)(6)(ii)

The proposed rule deleted the existing maximum excess shelter expense deductions and inserted the new ones contained in the statute. It also proposed in the preamble to index the maximum deductions for future years to the Shelter Component and Fuels and Utilities Component of the Consumer Price Index for all Urban Consumers (CPI–U). One commenter asked us to modify the regulatory language to include details on how these two components would be used in making future annual adjustments and recommended that the Department give them the same weights they receive within the overall CPI–U. When the Department made the adjustments for FY 2003 and FY 2004, we weighted the two components exactly as the commenter suggests, and will probably weight them the same way in future calculations. However, because the computation of the CPI–U and the weighting of components within it are not under the control of the Department, we have decided not to adopt the commenter's recommendation. We are concerned that future changes in the CPI–U, and unpredictable factors in the economy, may make the commenter's recommended methodology less favorable to food stamp participants than alternative methodologies at some point in the future. In addition, the rule, as drafted, is consistent with the Department's treatment of annual adjustments of the maximum excess shelter expense deduction in previous regulations.

III. Implementation

The proposed rule, published August 29, 2003, closely mirrored the January 4, 2001 guidance memorandum sent to States by the Food and Nutrition Service (FNS). The proposed rule, however, specified no implementation dates for this final rule's two provisions: the vehicle provision is a State option that can be implemented at any time after July 1, 2001; the statute required State agencies to implement the new maximum excess shelter expense deduction limits beginning March 1, 2001.

List of Subjects in 7 CFR Part 273

Administrative practice and procedure, Food stamps, Fraud, Grant

programs, Social programs, Resources, Vehicles.

■ Accordingly, 7 CFR part 273 is amended as follows:

PART 273—CERTIFICATION OF ELIGIBLE HOUSEHOLDS

■ 1. The authority citation for part 273 continues to read as follows:

Authority: 7 U.S.C. 2011–2036.

■ 2. In § 273.8, add new paragraph (f)(4) to read as follows:

§ 273.8 Resource eligibility standards.

* * * * *

(f) * * *

(4) A State agency may substitute for the vehicle evaluation provisions in paragraphs (f)(1) through (f)(3) of this section the vehicle evaluation provisions of a program in that State that uses TANF or State or local funds to meet TANF maintenance of effort requirements and provides benefits that meet the definition of ''assistance'' according to TANF regulations at 45 CFR 260.31, where doing so results in a lower attribution of resources to the household. States electing this option must:

(i) Apply the substituted TANF vehicle rules to all food stamp households in the State, whether or not they receive or are eligible to receive TANF assistance of any kind;

(ii) Exclude from household resources any vehicles excluded by either the substituted TANF vehicle rules or the food stamp vehicle rules at paragraphs (e)(3), (e)(5), (e)(11) and (f) of this section;

(iii) Apply either the substituted TANF rules or the food stamp vehicle rules to each of a household's vehicles in turn, using whichever set of rules produces the lower attribution of resources to the household;

(iv) Apply any vehicle exclusions allowed by their TANF vehicle rules to the vehicles with the highest values; and

(v) Exclude any vehicle owned by any household in the State if it selects TANF vehicle rules that exclude all vehicles completely or contain no resource provisions at all.

* * * * *

■ 3. In § 273.9, add two sentences after the second sentence of paragraph (d)(6)(ii) to read as follows:

§ 273.9 Income and deductions.

* * * * *

(d) * * *

(6) * * *

(ii) * * * For fiscal year 2001, effective March 1, 2001, the maximum monthly excess shelter expense deduction limits are $340 for the 48 contiguous States and the District of Columbia, $543 for Alaska, $458 for Hawaii, $399 for Guam, and $268 for the Virgin Islands. FNS will set the maximum monthly excess shelter expense deduction limits for fiscal year 2002 and future years by adjusting the previous year's limits to reflect changes in the shelter component and the fuels and utilities component of the Consumer Price Index for All Urban Consumers for the 12 month period ending the previous November 30.

* * *

* * * * *

Dated: July 21, 2004.

Eric M. Bost,

Under Secretary, Food, Nutrition, and Consumer Services.

Note: The following appendix will not appear in the Code of Federal Regulations.

Appendix: Regulatory Impact Analysis

Title: Vehicle and maximum excess shelter expense deduction provisions of the Agriculture, Rural Development, Food and Drug Administration, and Related Agencies Appropriations Act of 2001, Public Law 106–387.

Action:

(a) *Nature:* Final Rule.

(b) *Need:* This action is required as a result of the Agriculture, Rural Development, Food and Drug Administration, and Related Agencies Appropriations Act of 2001, Public Law 106–387.

(c) *Background:* On October 28, 2000, the President signed the Agriculture, Rural Development, Food and Drug Administration, and Related Agencies Appropriations Act of 2001 (Agriculture Appropriations Act of 2001). This rule implements sections 846 and 847 of the Agriculture Appropriations Act of 2001. Section 846 increases the maximum amount of the food stamp excess shelter expense deduction for fiscal year 2001 and indexes it for future years to the Consumer Price Index for all Urban Consumers for the 12 month period ending the previous November 30. Section 847 allows State agencies the option to use their Temporary Assistance for Needy Families (TANF) Program vehicle allowance rules rather than the vehicle rules used in the Food Stamp Program (FSP) where doing so will result in a lower attribution of resources to food stamp households.

1. *Justification of Alternatives:* These provisions are statutorily mandated and have already been implemented. In the case of the vehicle provision, FNS could have interpreted the statute to offer a more restrictive definition of TANF-funded programs, which would have limited the number of households gaining eligibility due to the provision. Instead, we proposed and are adopting a comprehensive definition of TANF-funded programs, which maximizes the benefits of the provision and is consistent with both our understanding of Congressional intent and prior policy guidance issued by the Food and Nutrition Service to States.

2. *Effects:* (a) Effects on food stamp recipients, and (b) Program costs: Although these provisions have already been implemented, they are expected to increase Food Stamp Program costs by $437 million in FY 2004 and $2.41 billion over the five years FY 2004 to FY 2008, compared to what program costs would have been in their absence. Likewise, these provisions are expected to add 298,000 new participants and increase benefits among 1.98 million current participants in FY 2004. These impacts are already incorporated into the President's FY 2005 budget baseline.

Section 846: Increase the Excess Shelter Deduction Limits

Discussion: Recognizing that shelter expenses reduce the amount of income available to purchase food, the Food Stamp Act of 1977 (FSA) provides a deduction from income for households whose shelter expenses exceed 50 percent of their income, after other applicable deductions are made. Because households with larger shelter expenses relative to their income generally receive a larger excess shelter deduction for food stamp benefit determination, the deduction is a means of targeting benefits to those most in need.

The FSA also sets limits on how large the excess shelter deduction can be, often referred to as the ''excess shelter deduction cap''. Since households with elderly or disabled members are not subject to the shelter deduction cap, most households affected by the cap are households with children. Legislation enacted since 1977 has adjusted the caps to the Consumer Price Index (Omnibus Budget Reconciliation Act of 1981); required that calculations of excess shelter deductions be rounded down to the next lower dollar (Omnibus Budget Reconciliation Act of 1982); removed the caps altogether (Omnibus Budget Reconciliation Act of 1993, Mickey Leland Childhood Hunger Relief Act); and most recently, reset caps and froze them at current levels for households without elderly or disabled members (Personal Responsibility and Work Opportunity Reconciliation Act of 1996). The excess shelter deduction caps in effect for FY 2001 were: $300, $521, $429, $364, and $221 respectively, for the 48 contiguous States and the District of Columbia, Alaska, Hawaii, Guam, and the United States Virgin Islands. Households with elderly or disabled members are not subject to the excess shelter caps.

Since the caps were frozen by the 1996 legislation, many FSP participants, State agencies, and advocacy organizations have sought legislation that would bring the maximum excess shelter expense deduction more closely in line with current housing costs and index it to the cost of living. Section 846 of the Agriculture Appropriations Act of 2001 accomplishes those objectives by: (a) setting the fiscal year 2001 maximum excess shelter expense deductions at $340, $543, $458, $399, and $268 per month for, respectively, the contiguous 48 States and the District of

Columbia, Alaska, Hawaii, Guam, and the Virgin Islands, effective March 1, 2001; and (b) setting the maximum excess shelter expense deductions for fiscal year 2002 and beyond by adjusting the previous year's maximums to changes in the Consumer Price Index for All Urban Consumers for each 12-month period ending the preceding November 30.

Effect on Low-Income Families: This provision will affect low-income households without an elderly or disabled member, who certify or re-certify for food stamp benefits on or after March 1, 2001, who have shelter expenses that are high enough relative to their net income to be eligible for the excess shelter deduction, are subject to the current shelter cap, and are not already receiving the maximum benefit for their household size. Most households affected by the provision are households with children. It will allow affected households to claim a larger income deduction for shelter expenses and to obtain higher food stamp benefits.

Cost Impact: Although this provision has already been fully implemented, we estimate that the cost to the Government of this provision will be $148 million in FY 2004, and $883 million over the five years, FY 2004 through FY 2008, compared to what costs would have been in its absence. These impacts are already incorporated into the President's FY 2005 budget baseline.

Cost estimates were based on food stamp cost projections from the President's FY 2005 budget baseline of December 2003. While we recognize that the President's FY 2005 budget baseline is an imperfect baseline for this analysis because it already incorporates the impacts of this provision and subsequent legislation, it is preferable to the alternatives because it reflects the most recent economic and participation trends. The new values of the shelter cap for FY 2002 and beyond were calculated by inflating the FY 2001 values, using actual and projected values of the Consumer Price Index for All Urban Consumers from the Office of Management and Budget's economic assumptions for the President's FY 2005 budget. The benefit and participation impacts of raising the shelter deduction cap to the new values were modeled using data from the 2002 food stamp quality control sample regarding household characteristics, income and expenses. Using these data, we were able to measure expected changes in household benefits resulting from the changes in the shelter cap. The program suggested that raising the cap would increase program benefits by less than one percent nationally. The estimated percentage increase was multiplied by the baseline cost projections to estimate the expected cost increase for each fiscal year. Because this provision became effective on March 1, 2001 for households who are newly certified or re-certified, the provision was considered fully implemented in FY 2004. Cost estimates were rounded to the nearest million dollars.

Participation Impacts: We estimate that raising the shelter deduction cap will raise benefits among those households currently participating and subject to the shelter deduction cap. We do not expect any significant impacts on participation due to nature of the rule change and the small benefit increase per recipient. FY 2002 quality control data indicate that 8.4 percent of food stamp participants will receive higher benefits due to this provision. (These are persons in households that claim the maximum shelter deduction but receive less than the maximum food stamp benefit. Households that already receive the maximum food stamp allotment cannot have their benefits raised as a result of this provision.) Applying this percentage to the participation projections for the President's FY 2005 budget baseline, we estimate that 1.98 million persons will each receive an average of $6.23 more per month in food stamp benefits in FY 2004, when compared to the benefits they would have received if the cap had remained frozen as legislated prior to this provision.

Uncertainty: Because these estimates are based on detailed food stamp household data from the food stamp quality control system, they are associated with a fairly high degree of certainty. To the extent that actual shelter expenses in future years change more or less than forecasted in the President's FY 2005 baseline economic assumptions, future shelter deduction cap values could differ, and actual costs of this provision could be larger or smaller than estimated.

Section 847: State Option To Use TANF Vehicle Rules

Discussion: Since 1964, food stamp legislation has limited the value of resources households may own while remaining eligible for food stamps. The FSA specifically addresses the valuation of vehicles as resources that count toward the resource limit of $2,000 per household, or $3,000 for households with one or more members who are disabled, or aged 60 years or over. The fair market value (FMV) of vehicles in excess of $4,500 was designated as a countable resource in the 1977 FSA. Subsequent laws have raised the FMV limit to $4,650, excluded the value of vehicles used for various purposes from household resources, and designated vehicles whose sale would net no more than $1,500, after payment of liens, as inaccessible resources. After excluding all vehicles exempted by the FSA, food stamp vehicle rules prior to the provision in this rule (referred to hereafter as the ''basic'' food stamp vehicle rules) apply the excess FMV test to one licensed vehicle per adult household member and any other licensed vehicle a teenager drives to work, school, job training, or job hunting. Additional non-exempt licensed vehicles are valued at the higher of excess FMV or equity value (fair market value minus any outstanding loan balance). Unlicensed vehicles are counted at their equity value.

Section 847 of the Agriculture Appropriations Act of 2001 amends section 5(g)(2) of the Food Stamp Act of 1977 to allow States to substitute their TANF vehicle rules for the food stamp vehicle rules when doing so would result in a lower attribution of food stamp resources to households. In lieu of the basic food stamp vehicle rules at 7 CFR 273.8(f), the Department proposes that States may substitute the vehicle rules from any program that receives TANF or TANF maintenance of effort funds and meets the definition of ''assistance'' according to TANF regulations at 45 CFR 260.31. Implementation of section 847 will streamline the process of determining eligibility, make many more households eligible for food stamps, reduce errors, and facilitate processing of TANF and food stamp joint applications. The effect of section 847 will vary from State to State, according to the TANF vehicle rules developed by each State and whether or not they implement this optional treatment of vehicles.

Effect on Low-Income Families: This provision will allow States to adopt more generous vehicle rules from their TANF-funded programs for use in determining food stamp eligibility. By adopting more generous TANF vehicle rules, some income-eligible food stamp households who were previously ineligible because of the basic food stamp vehicle rules valuation of their vehicle(s), are made eligible to participate. Persons will be affected by the provision to the extent that States adopt this provision and to the extent that States have less restrictive vehicle rules in their relevant TANF-funded programs.

Cost Impact: Although section 847 is already fully implemented, we estimate that the cost to the Government of this provision will be $289 million in FY 2004 and $1.527 billion over the five years FY 2004 to FY 2008, compared to what costs would have been in its absence. These impacts are already incorporated into the President's FY 2005 budget baseline.

In FY 2004, 31 States reported adopting their more generous TANF-cash vehicle rules for the purpose of determining food stamp eligibility. Ten other States reported adopting vehicle rules from their TANF-funded child care and foster care programs for the purpose of determining food stamp eligibility. For the impact analysis, it is assumed that States interested in adopting vehicle rules from any of their TANF-funded programs have done so and that no additional States will switch to TANF vehicle rules in the future.

In order to estimate the impact of this provision on food stamp participation and benefit costs, we used data from the 1999 Survey of Income and Program Participation (SIPP), which contains information about household characteristics, income and assets—including vehicle ownership data. Using this dataset, we created the 1999 MATH SIPP simulation program, which models food stamp eligibility, participation and benefits under FSP vehicle rules and allows us to compare them to participation and benefits under alternative vehicle rules. Ideally, we would use a model based on the basic food stamp vehicle rules and we would measure the impact of this provision by simulating the change to allow States to adopt TANF vehicle rules. Because the model was created after implementation of the Agricultural Appropriations Act of 2001, however, it already includes the State adoption of TANF vehicles rules as of January 2004. For each State that chose to adopt TANF vehicle rules for determining food stamp eligibility, the model uses their specific TANF vehicle rules based on the policy choices they made for FY 2004. We then backed out the cost and participation

impacts of this provision by simulating the restriction of States to the basic food stamp vehicle rules, and took the absolute value of that impact.

STATE VEHICLE RULES FOR DETERMINING FSP ELIGIBILITY (AS OF JANUARY 2004)

FSP vehicle rules (6 states)	TANF-cash vehicle rules (31 states)	TANF child care or foster care vehicle rules (10 states)	Other: states with expanded categorical eligibility (6 states)
GA, ID, IA, TN, VI, WA	AL, AK, AZ, AR, CT, DC, FL, GU, HI, IL, KS, KY, LA, ME, MD, MN, MS, MT, NV, NH, NJ, NC, OH, OK, PA, RI, SD, UT, VT, VA, WY.	CA, CO, IN, MA, MO, NE, NM, NY, WV, WI.	DE, MI, ND, OR, SC, TX.

The impact of States moving from FSP vehicle rules to TANF-based vehicle rules was estimated as a 2.38 percent increase in national benefits. This impact was multiplied by expected benefits for each fiscal year, based on the President's FY 2005 budget baseline of December 2003. While we recognize that the President's FY 2005 budget baseline is an imperfect baseline for this analysis because it already incorporates the impacts of this provision and subsequent legislation, it is preferable to the alternatives because it reflects the most recent economic and participation trends.

An additional adjustment was made to account for other policy choices available to States regarding their treatment of assets. The simulation impact assumes that, in the absence of this provision, States would use basic FSP vehicle rules in determining household assets. We believe, however, that some of these States would have chosen to adopt more expansive categorical eligibility policies as well. (The FSA permits some households to be categorically eligible for benefits. Those households do not need to meet the resource test, so the value of their vehicles is irrelevant to their eligibility determination. States have some choice in how to define categorical eligibility.) By expanding categorical eligibility, States would lower the number of households subject to the FSP vehicle asset rules. To account for this alternative policy available to States, estimates were reduced by half in all years. Given that section 847 was effective on July 1, 2001, we considered it to be fully implemented in FY 2004 and no further adjustments were made. Cost estimates were rounded to the nearest million dollars.

Participation Impacts: Although already implemented, we estimate that this provision will increase average participation in the Food Stamp Program by 298,000 persons in FY 2004, compared to what participation would have been in its absence. Among those made eligible by this provision, we estimate that their average monthly food stamp benefit will be $80.71. These impacts are already incorporated into the President's FY 2005 budget baseline.

Participation impacts were estimated using the same method as the cost impacts. The participation impact was estimated as a 2.52 percent expected increase in participation. This impact was multiplied by expected participation for each fiscal year, based on the President's FY 2005 budget baseline of December 2003. As with the cost estimate, participation estimates were reduced by half to reflect alternative policy choices available to States regarding the treatment of assets. Participation estimates were rounded to the nearest thousand persons.

Uncertainty: There is a great deal of uncertainty associated with this estimate. The 1999 MATH SIPP model produces fairly accurate impact estimates based on a national dataset, details about State specific TANF vehicle policies, and known State policy choices. It is uncertain, however, how many States would have chosen to expand FSP categorical eligibility in the absence of this provision. The 50 percent reduction is our best estimate, based on the demonstrated desire of many States to liberalize their asset rules through the adoption of their TANF vehicle rules. To the extent that a greater or fewer number of States would have adopted expanded categorical eligibility, the cost of this provision to the Government would differ.

Societal Costs: While this regulatory impact analysis details the expected impacts on Food Stamp Program costs and the number of participants likely to be affected by the food stamp provisions of the Agricultural Appropriation Act of 2001, it does not provide an estimate of the overall social costs of the provisions, nor does it include a monetized estimate of the benefits they bring to society. We anticipate that the provisions will improve program operations by providing States with the ability to coordinate food stamp and TANF vehicle rules. In addition, by increasing food stamp benefits to low-income families, we believe that these statutory changes will increase food expenditures, which may strengthen food security.

BILLING CODE 3410–30–P

Summary Table:
Final Rule: Vehicle and Excess Shelter Expense Deduction and Provisions of the Agricultural Appropriations Act of 2001

	GOVERNMENT COST (in millions of dollars)						PARTICIPATION (in persons)		SOURCE OF ESTIMATE
Fiscal Year	2004	2005	2006	2007	2008	5-YEAR	# of New Participants	# w/Higher Benefits	
Section 846 Raise Shelter Cap	$148	$171	$179	$187	$198	$883	minimal	1,980,000 in 2004	FY 2005 baseline 2002 QC minimodel CPI-U
Section 847 TANF Vehicle Option	$289	$312	$309	$308	$309	$1,527	298,000 in 2004	n/a	FY 2005 baseline 1999 MATH-SIPP State Options Report
TOTAL	$437	$483	$488	$495	$507	$2,410			

[FR Doc. 04–17225 Filed 7–28–04; 8:45 am]
BILLING CODE 3410–30–C

DEPARTMENT OF AGRICULTURE

Agricultural Marketing Service

7 CFR Part 906

[Docket No. FV04–906–2 IFR]

Oranges and Grapefruit Grown in Lower Rio Grande Valley in Texas; Decreased Assessment Rate

AGENCY: Agricultural Marketing Service, USDA.

ACTION: Interim final rule with request for comments.

SUMMARY: This rule decreases the assessment rate established for the Texas Valley Citrus Committee (Committee) for the 2004–05 and subsequent fiscal periods from $0.14 to $0.12 per 7/10-bushel carton or equivalent of oranges and grapefruit handled. The Committee locally administers the marketing order which regulates the handling of oranges and grapefruit grown in the Lower Rio Grande Valley in Texas. Authorization to assess orange and grapefruit handlers enables the Committee to incur expenses that are reasonable and necessary to administer the program. The fiscal period begins August 1 and ends July 31. The assessment rate will remain in effect indefinitely unless modified, suspended, or terminated.

DATES: Effective July 30, 2004. Comments received by September 27, 2004, will be considered prior to issuance of a final rule.

ADDRESSES: Interested persons are invited to submit written comments concerning this rule. Comments must be sent to the Docket Clerk, Marketing Order Administration Branch, Fruit and Vegetable Programs, AMS, USDA, 1400 Independence Avenue, SW., STOP 0237, Washington, DC 20250–0237; Fax: (202) 720–8938, or e-mail: *moab.docketclerk@usda.gov*; or Internet: *http://www.regulations.gov*. Comments should reference the docket number and the date and page number of this issue of the **Federal Register** and will be available for public inspection in the Office of the Docket Clerk during regular business hours, or can be viewed at: *http://www.ams.usda.gov/fv/moab.html*.

FOR FURTHER INFORMATION CONTACT: Belinda G. Garza, Regional Manager, McAllen Marketing Field Office, Marketing Order Administration Branch, Fruit and Vegetable Programs, AMS, USDA, 1313 E. Hackberry, McAllen, TX 78501; telephone: (956) 682–2833, Fax: (956) 682–5942; or George Kelhart, Technical Advisor, Marketing Order Administration Branch, Fruit and Vegetable Programs, AMS, USDA, 1400 Independence Avenue, SW., STOP 0237, Washington, DC 20250–0237; telephone: (202) 720–2491, Fax: (202) 720–8938.

Small businesses may request information on complying with this regulation by contacting Jay Guerber, Marketing Order Administration Branch, Fruit and Vegetable Programs, AMS, USDA, 1400 Independence Avenue, SW., STOP 0237, Washington, DC 20250–0237; telephone: (202) 720–2491, Fax: (202) 720–8938, or e-mail: *Jay.Guerber@usda.gov*.

SUPPLEMENTARY INFORMATION: This rule is issued under Marketing Agreement and Order No. 906, as amended (7 CFR part 906), regulating the handling of oranges and grapefruit grown in the Lower Rio Grande Valley in Texas, hereinafter referred to as the ''order.'' The order is effective under the Agricultural Marketing Agreement Act of 1937, as amended (7 U.S.C. 601–674), hereinafter referred to as the ''Act.''

The Department of Agriculture (USDA) is issuing this rule in conformance with Executive Order 12866.

This rule has been reviewed under Executive Order 12988, Civil Justice Reform. Under the marketing order now in effect, orange and grapefruit handlers in the Lower Rio Grande Valley are subject to assessments. Funds to administer the order are derived from such assessments. It is intended that the assessment rate as issued herein will be applicable to all assessable oranges and grapefruit beginning August 1, 2004, and continue until amended, suspended, or terminated. This rule will not preempt any State or local laws, regulations, or policies, unless they present an irreconcilable conflict with this rule.

The Act provides that administrative proceedings must be exhausted before parties may file suit in court. Under section 608c(15)(A) of the Act, any handler subject to an order may file with USDA a petition stating that the order, any provision of the order, or any obligation imposed in connection with the order is not in accordance with law and request a modification of the order or to be exempted therefrom. Such handler is afforded the opportunity for a hearing on the petition. After the hearing USDA would rule on the petition. The Act provides that the district court of the United States in any district in which the handler is an inhabitant, or has his or her principal place of business, has jurisdiction to review USDA's ruling on the petition, provided an action is filed not later than 20 days after the date of the entry of the ruling.

This rule decreases the assessment rate established for the Committee for the 2004–05 and subsequent fiscal periods from $0.14 per to $0.12 per 7/10-bushel carton or equivalent of oranges and grapefruit.

The Texas orange and grapefruit marketing order provides authority for the Committee, with the approval of USDA, to formulate an annual budget of expenses and collect assessments from handlers to administer the program. The members of the Committee are producers and handlers of Texas oranges and grapefruit. They are familiar with the Committee's needs and with the costs for goods and services in their local area and are thus in a position to formulate an appropriate budget and assessment rate. The assessment rate is formulated and discussed in a public meeting. Thus, all directly affected persons have an opportunity to participate and provide input.

For the 2003–04 and subsequent fiscal periods, the Committee recommended, and USDA approved, an assessment rate that would continue in effect from fiscal period to fiscal period unless modified, suspended, or terminated by USDA upon recommendation and information submitted by the Committee or other information available to USDA.

The Committee met on May 21, 2004, and recommended 2004–05 expenditures of $1,005,956 and an assessment rate of $0.12 per 7/10-bushel carton or equivalent of oranges and grapefruit. Thirteen of the 14 Committee members and alternates acting as members voted in support of the $0.02 decrease per 7/10-bushel carton or equivalent. One Committee member voted against the recommendation because he wanted the decrease to be larger. In comparison, last year's budgeted expenditures were $1,322,506. The assessment rate of $0.12 is $0.02 lower than the rate currently in effect. The decrease in the assessment rate and budget is primarily due to lower promotion and Mexican Fruit Fly program budgets. The reduced assessment rate and budget will lower handler costs by about $180,000 and will keep the Committee's operating reserve at an acceptable level.

The major expenditures recommended by the Committee for the 2004–05 fiscal period include $550,000 for promotion, $204,000 for the Mexican Fruit Fly Support Program, $123,679 for management and administration of the program, and $72,777 for compliance. Budgeted expenses for these items in 2003–04 were $800,000, $279,000, $119,929, and $72,777, respectively.

The assessment rate recommended by the Committee was derived by dividing anticipated expenses by expected shipments of Texas oranges and grapefruit. Texas orange and grapefruit shipments for the fiscal period are estimated at 9 million 7/10-bushel cartons or equivalents, which should provide $1,080,000 in assessment income. Income derived from handler assessments will be more than adequate to cover budgeted expenses. Funds in the reserve (currently $175,000) will be kept within the maximum of one fiscal period's expenses permitted by the order (§ 906.35).

The assessment rate established in this rule will continue in effect indefinitely unless modified, suspended, or terminated by USDA upon recommendation and information submitted by the Committee or other available information.

Although this assessment rate is effective for an indefinite period, the Committee will continue to meet prior to or during each fiscal period to recommend a budget of expenses and consider recommendations for modification of the assessment rate. The dates and times of Committee meetings are available from the Committee or USDA. Committee meetings are open to the public and interested persons may express their views at these meetings. USDA will evaluate Committee recommendations and other available information to determine whether modification of the assessment rate is needed. Further rulemaking will be undertaken as necessary. The Committee's 2004–05 budget and those for subsequent fiscal periods will be reviewed and, as appropriate, approved by USDA.

Initial Regulatory Flexibility Analysis

Pursuant to requirements set forth in the Regulatory Flexibility Act (RFA), the Agricultural Marketing Service (AMS) has considered the economic impact of this rule on small entities. Accordingly, AMS has prepared this initial regulatory flexibility analysis.

The purpose of the RFA is to fit regulatory actions to the scale of business subject to such actions in order that small businesses will not be unduly or disproportionately burdened. Marketing orders issued pursuant to the Act, and the rules issued thereunder, are unique in that they are brought about through group action of essentially small entities acting on their own behalf. Thus, both statutes have small entity orientation and compatibility.

There are approximately 215 producers of oranges and grapefruit in the production area and approximately 13 handlers subject to regulation under the marketing order. Small agricultural producers are defined by the Small Business Administration (SBA) (13 CFR 121.201) as those having annual receipts less than $750,000, and small agricultural service firms are defined as those whose annual receipts are less than $5,000,000.

An updated Texas citrus industry profile shows that 2 of the 13 handlers (15 percent) could be considered large businesses under SBA's definition, and the remaining 11 handlers (85 percent) could be considered small businesses. Of the approximately 215 producers within the production area, few have sufficient acreage to generate sales in excess of $750,000. Thus, the majority of handlers and producers of Texas oranges and grapefruit may be classified as small entities.

This rule decreases the assessment rate established for the Committee and collected from handlers for the 2004–05 and subsequent fiscal periods from $0.14 to $0.12 per 7/10-bushel carton or equivalent of oranges and grapefruit.

The Committee met on May 21, 2004, and recommended 2004–05 expenditures of $1,005,956 and an assessment rate of $0.12 per 7/10-bushel carton or equivalent of oranges and grapefruit. The assessment rate of $0.12 is $0.02 lower than the current rate. As mentioned earlier, the quantity of assessable oranges and grapefruit for the 2004–05 fiscal period is estimated at 9 million 7/10-bushel cartons or equivalents. Thus, the $0.12 assessment rate should provide $1,080,000 in assessment income and be more than adequate to cover budgeted expenses.

The major expenditures recommended by the Committee for the

2004–05 fiscal period include $550,000 for promotion, $204,000 for the Mexican Fruit Fly Support Program, $123,679 for management and administration of the program, and $72,777 for compliance. Budgeted expenses for these items in 2003–04 were $800,000, $279,000, $119,929, and $72,777, respectively.

The Committee recommended the $0.12 assessment rate primarily because it reduced its promotion and Mexican Fruit Fly programs. At a $0.14 assessment rate, the Committee projected its reserve on July 31, 2005, to be $401,160, which it believed was more than needed to administer the program. It also recommended the reduced assessment rate to lower handler costs by about $180,000 during 2004–05.

The Committee reviewed and recommended 2004–05 expenditures of $1,005,956, which included decreases in the promotion and Mexican Fruit Fly programs and an increase in the management and administration of the marketing order program. In arriving at the budget, the Committee considered information from various sources, including the Executive Committee. Alternative expenditure levels were discussed, based upon the relative need of the Mexican Fruit Fly program to the Texas citrus industry.

The assessment rate recommended by the Committee was derived by dividing the total recommended budget by the 9 million 7/10-bushel cartons of oranges and grapefruit estimated for the 2004–05 fiscal period. The $0.12 rate will provide $1,080,000 in assessment income. This is approximately $74,044 above the anticipated expenses, which the Committee determined to be acceptable.

A review of historical information from recent seasons (2000–2002) and preliminary information pertaining to the upcoming fiscal period indicates that the season average packinghouse door price for the 2004–05 fiscal period could likely range from $1.40 to $2.60 per 7/10-bushel carton of Texas oranges, and from $2.15 to $2.70 for Texas grapefruit. Therefore, the estimated assessment revenue for the 2004–05 fiscal period as a percentage of total grower (packinghouse door) revenue could range between 8.6 and 4.6 percent for oranges and between 5.6 and 4.4 percent for grapefruit.

This action decreases the assessment obligation imposed on handlers. Assessments are applied uniformly on all handlers, and some of the costs may be passed on to producers. However, decreasing the assessment rate reduces the burden on handlers, and may reduce the burden on producers. In addition, the Committee's meeting was widely publicized throughout the Texas orange and grapefruit industry and all interested persons were invited to attend the meeting and participate in Committee deliberations on all issues. Like all Committee meetings, the May 21, 2004, meeting was a public meeting and all entities, both large and small, were able to express views on this issue. Finally, interested persons are invited to submit information on the regulatory and informational impacts of this action on small businesses.

This action imposes no additional reporting or recordkeeping requirements on either small or large Texas orange and grapefruit handlers. As with all Federal marketing order programs, reports and forms are periodically reviewed to reduce information requirements and duplication by industry and public sector agencies.

USDA has not identified any relevant Federal rules that duplicate, overlap, or conflict with this rule.

A small business guide on complying with fruit, vegetable, and specialty crop marketing agreements and orders may be viewed at: *http://www.ams.usda.gov/fv/moab.html.* Any questions about the compliance guide should be sent to Jay Guerber at the previously mentioned address in the **FOR FURTHER INFORMATION CONTACT** section.

After consideration of all relevant material presented, including the information and recommendation submitted by the Committee and other available information, it is hereby found that this rule, as hereinafter set forth, will tend to effectuate the declared policy of the Act.

Pursuant to 5 U.S.C. 553, it is also found and determined upon good cause that it is impracticable, unnecessary, and contrary to the public interest to give preliminary notice prior to putting this rule into effect, and that good cause exists for not postponing the effective date of this rule until 30 days after publication in the **Federal Register** because: (1) The 2004–05 fiscal period begins on August 1, 2004, and the marketing order requires that the rate of assessment for each fiscal period apply to all assessable oranges and grapefruit handled during such fiscal period; (2) this action decreases the assessment rate for assessable oranges and grapefruit beginning with the 2004–05 fiscal period; (3) handlers are aware of this action which was recommended by the Committee at a public meeting and is similar to other assessment rate actions issued in past years; and (4) this interim final rule provides a 60-day comment period, and all comments timely received will be considered prior to finalization of this rule.

List of Subjects in 7 CFR Part 906

Grapefruit, Marketing agreements, Oranges, Reporting and recordkeeping requirements.

■ For the reasons set forth in the preamble, 7 CFR part 906 is amended as follows:

PART 906—ORANGES AND GRAPEFRUIT GROWN IN LOWER RIO GRANDE VALLEY IN TEXAS

■ 1. The authority citation for 7 CFR part 906 continues to read as follows:

Authority: 7 U.S.C. 601–674.

■ 2. Section 906.235 is revised to read as follows:

§ 906.235 Assessment rate.

On and after August 1, 2004, an assessment rate of $0.12 per 7/10-bushel carton or equivalent is established for oranges and grapefruit grown in the Lower Rio Grande Valley in Texas.

Dated: July 23, 2004.

A.J. Yates,

Administrator, Agricultural Marketing Service.

[FR Doc. 04–17273 Filed 7–28–04; 8:45 am]

BILLING CODE 3410–02–P

DEPARTMENT OF AGRICULTURE

Agricultural Marketing Service

7 CFR Parts 922 and 923

[Docket No. FV04–922–1 IFR]

Decreased Assessment Rates for Specified Marketing Orders

AGENCY: Agricultural Marketing Service, USDA.

ACTION: Interim final rule with request for comments.

SUMMARY: This rule decreases the assessment rates established for the Washington Apricot Marketing Committee and the Washington Cherry Marketing Committee (Committees) for the 2004–2005 and subsequent fiscal periods. This rule decreases the assessment rates established for the Committees from $3.00 to $2.50 per ton for Washington apricots and from $1.00 to $0.75 per ton for Washington sweet cherries. The Committees are responsible for local administration of the marketing orders that regulate the handling of apricots and cherries grown in designated counties in Washington. Authorization to assess apricot and cherry handlers enables the Committees to incur expenses that are reasonable

and necessary to administer the programs. The fiscal period for both marketing orders began April 1 and ends March 31. The assessment rates will remain in effect indefinitely unless modified, suspended, or terminated.

DATES: Effective July 30, 2004. Comments received by September 27, 2004, will be considered prior to issuance of a final rule.

ADDRESSES: Interested persons are invited to submit written comments concerning this rule. Comments must be sent to the Docket Clerk, Marketing Order Administration Branch, Fruit and Vegetable Programs, AMS, USDA, 1400 Independence Avenue, SW., STOP 0237, Washington, DC 20250–0237; Fax: (202) 720–8938; E-mail: *moab.docketclerk@usda.gov*; or Internet: *http://www.regulations.gov*. Comments should reference the docket number and the date and page number of this issue of the **Federal Register** and will be available for public inspection in the Office of the Docket Clerk during regular business hours, or can be viewed at: *http://www.ams.usda.gov/fv/moab.html*.

FOR FURTHER INFORMATION CONTACT: Teresa L. Hutchinson, Marketing Specialist, Northwest Marketing Field Office, Marketing Order Administration Branch, Fruit and Vegetable Programs, AMS, USDA, 1220 SW. Third Avenue, suite 385, Portland, OR 97204; telephone: (503) 326–2724, Fax: (503) 326–7440; or George J. Kelhart, Technical Advisor, Marketing Order Administration Branch, Fruit and Vegetable Programs, AMS, USDA, 1400 Independence Avenue, SW., STOP 0237, Washington, DC 20250–0237; telephone: (202) 720–2491, Fax: (202) 720–8938.

Small businesses may request information on complying with this regulation by contacting Jay Guerber, Marketing Order Administration Branch, Fruit and Vegetable Programs, AMS, USDA, 1400 Independence, SW., STOP 0237, Washington, DC 20250–0237; telephone: (202) 720–2491, Fax: (202) 720–8938, or E-mail: *Jay.Guerber@usda.gov*.

SUPPLEMENTARY INFORMATION: This rule is issued under Marketing Agreement and Order No. 922 (7 CFR part 922) regulating the handling of apricots grown in designated counties in Washington, and Marketing Agreement and Order No. 923 (7 CFR part 923) regulating the handling of sweet cherries grown in designated counties in Washington, hereinafter referred to as the ''orders.'' The orders are effective under the Agricultural Marketing Agreement Act of 1937, as amended (7 U.S.C. 601–674), hereinafter referred to as the ''Act.''

The Department of Agriculture (USDA) is issuing this rule in conformance with Executive Order 12866.

This rule has been reviewed under Executive Order 12988, Civil Justice Reform. Under the marketing orders now in effect, handlers in designated counties in Washington are subject to assessments. Funds to administer the orders are derived from such assessments. It is intended that the assessment rates as issued herein will be applicable to all assessable Washington apricots and Washington sweet cherries beginning April 1, 2004, and continue until amended, suspended, or terminated. This rule will not preempt any State or local laws, regulations, or policies, unless they present an irreconcilable conflict with this rule.

The Act provides that administrative proceedings must be exhausted before parties may file suit in court. Under section 608c(15)(A) of the Act, any handler subject to an order may file with USDA a petition stating that the order, any provision of the order, or any obligation imposed in connection with the order is not in accordance with law and request a modification of the order or to be exempted therefrom. Such handler is afforded the opportunity for a hearing on the petition. After the hearing USDA would rule on the petition. The Act provides that the district court of the United States in any district in which the handler is an inhabitant, or has his or her principal place of business, has jurisdiction to review USDA's ruling on the petition, provided an action is filed not later than 20 days after the date of the entry of the ruling.

This rule decreases the assessment rates established for the Committees for the 2004–2005 and subsequent fiscal periods from $3.00 to $2.50 per ton for Washington apricots and from $1.00 to $0.75 per ton for Washington sweet cherries.

The orders provide authority for the Committees, with the approval of USDA, to formulate annual budgets of expenses and collect assessments from handlers to administer the program. The members of the Committees are producers and handlers of apricots and sweet cherries in designated counties in Washington. They are familiar with the Committees' needs and with the costs for goods and services in their local areas and are thus in a position to formulate appropriate budgets and assessment rates. The assessment rates are formulated and discussed in public meetings. Thus, all directly affected persons have an opportunity to participate and provide input.

For the 2003–2004 and subsequent fiscal periods, the Washington Apricot Marketing Committee (Apricot Committee) recommended, and USDA approved, an assessment rate of $3.00 per ton of apricots handled. This assessment rate continues in effect from fiscal period to fiscal period unless modified, suspended, or terminated by USDA upon recommendation and information submitted by the Apricot Committee or other information available to USDA.

The Apricot Committee met on May 17, 2004, and unanimously recommended 2004–2005 expenditures of $10,594 and a decreased assessment rate of $2.50 per ton of assessable apricots handled. In comparison, last year's budgeted expenditures were $10,559. The assessment rate of $2.50 is $0.50 lower than the rate currently in effect. Due to an anticipated increase in apricot production this season, the Apricot Committee recommended the assessment rate decrease to maintain the level of income at or near the level of expenses.

The assessment rate recommended by the Apricot Committee was derived by dividing anticipated expenses by expected shipments of Washington apricots. Applying the $2.50 per ton rate of assessment to the Apricot Committee's 4,350-ton crop estimate should provide $10,875 in assessment income. Thus, income derived from handler assessments will be adequate to cover the recommended 2004–2005 budget of $10,594. Funds in the reserve ($11,418 as of March 31, 2004) will be maintained at a level equal to approximately one fiscal period's operational expenses as authorized by the order (§ 922.42).

For the 2003–2004 and subsequent fiscal periods, the Washington Cherry Marketing Committee (Cherry Committee) recommended, and the USDA approved, an assessment rate of $1.00 per ton of sweet cherries handled. This rate continues in effect from fiscal period to fiscal period unless modified, suspended, or terminated by USDA upon recommendation and information submitted by the Cherry Committee or other information available to USDA.

The Cherry Committee met on May 18, 2004, and unanimously recommended 2004–2005 expenditures of $72,297 and a decreased assessment rate of $0.75 per ton of assessable cherries handled. In comparison, last year's budgeted expenditures were $71,865. The assessment rate of $0.75 is $0.25 lower than the rate previously in effect. Due to an anticipated increase in

cherry production this season, the Cherry Committee recommended the assessment rate decrease in order to maintain the level of income near the level of expenses.

The assessment rate recommended by the Cherry Committee was derived by dividing anticipated expenses by expected shipments of Washington sweet cherries. Applying the $0.75 per ton rate of assessment to the Cherry Committee's 112,600-ton crop estimate should provide $84,450 in assessment income. Thus, income derived from handler assessments will be adequate to cover the recommended 2004–2005 budget of $72,297. Funds in the reserve ($58,970 as of March 31, 2004), will be kept within the maximum permitted by the order of approximately one fiscal period's operational expenses (§ 923.42).

Both Committees are managed from the same office, thus combined major expenses recommended by the Committees for the 2004–2005 year include staff salaries ($50,572), rent and maintenance ($6,624), compliance ($4,740), and Committee travel and compensation ($3,200). These budgeted expenses are the same as those approved for the 2003–2004 fiscal period.

The assessment rates established in this rule will continue in effect indefinitely unless modified, suspended, or terminated by USDA upon recommendation and information submitted by the Committees or other available information.

Although these assessment rates are effective for an indefinite period, the Committees will continue to meet prior to or during each fiscal period to recommend budgets of expenses and consider recommendations for modification of the assessment rates. The dates and times of the Committees' meetings are available from the Committees or USDA. The Committees' meetings are open to the public and interested persons may express their views at these meetings. USDA will evaluate the Committees' recommendations and other available information to determine whether modification of the assessment rates is needed. Further rulemaking will be undertaken as necessary. The Committees' 2004–2005 budgets and those for subsequent fiscal periods will be reviewed and, as appropriate, approved by USDA.

Initial Regulatory Flexibility Analysis

Pursuant to requirements set forth in the Regulatory Flexibility Act (RFA), the Agricultural Marketing Service (AMS) has considered the economic impact of this rule on small entities. Accordingly, AMS has prepared this initial regulatory flexibility analysis.

The purpose of the RFA is to fit regulatory actions to the scale of business subject to such actions in order that small businesses will not be unduly or disproportionately burdened. Marketing orders issued pursuant to the Act, and the rules issued thereunder, are unique in that they are brought about through group action of essentially small entities acting on their own behalf. Thus, both statutes have small entity orientation and compatibility.

There are approximately 272 apricot producers and 1,800 sweet cherry producers in designated counties in Washington. In addition, there are approximately 28 Washington apricot handlers and 69 Washington sweet cherry handlers subject to regulation under the respective marketing orders. Small agricultural producers are defined by the Small Business Administration (13 CFR 121.201) as those having annual receipts of less than $750,000, and small agricultural service firms are defined as those whose annual receipts are less than $5,000,000.

Based on the total number of apricot producers (272), the most recent three-year average fresh apricot production of 3,975 tons (Apricot Committee records), and the most recent three-year average producer price of $355 per ton as reported by National Agricultural Statistics Service (NASS), average annual revenue per producer from the sale of apricots is approximately $5,188. In addition, based on Apricot Committee records and 2003 f.o.b. prices ranging from $10.50 to $12.50 per 24-pound container as reported by USDA's Market News Service (MNS), the entire Washington apricot industry handles less than $5,000,000 worth of apricots.

Based on the total number of sweet cherry producers (1,800), the most recent three-year average fresh cherry production of 79,763 tons (Cherry Committee records), and the most recent three-year average producer price of $1,390 per ton as reported by NASS, the average annual revenue per producer from the sale of cherries is approximately $61,595. In addition, based on Cherry Committee records and an average 2003 f.o.b. price of $28.00 per 20-pound container as reported by the MNS, 75 percent of the Washington cherry handlers ship under $5,000,000 worth of cherries. In view of the forgoing, the majority of Washington cherry producers and handlers may be classified as small entities.

This rule decreases the assessment rates established for the Committees and collected from handlers for the 2004–2005 and subsequent fiscal periods from $3.00 to $2.50 per ton for apricots and from $1.00 to $0.75 per ton for sweet cherries. The Apricot Committee and the Cherry Committee unanimously recommended 2004–2005 expenditures of $10,594 and $72,297, respectively. With the 2004–2005 crop estimates of 4,350 tons for apricots and 112,600 tons for sweet cherries, the Committees anticipate assessment income of $10,875 and $84,450, respectively, which will be adequate to cover budgeted expenses for both programs. These assessment incomes will maintain the Committees' reserve funds at or near the levels authorized by the orders of approximately one fiscal period's operational expenses (§§ 922.42 and 923.42).

Both Committees are managed from the same office, thus combined major expenses recommended by the Committees for the 2004–2005 year include staff salaries ($50,572), rent and maintenance ($6,624), compliance ($4,740), and Committee travel and compensation ($3,200). These budgeted expenses are the same as those approved for the 2003–2004 fiscal period.

The Committees discussed alternatives to this rule, including alternative expenditure levels, but determined that the recommended expenses were reasonable and necessary to adequately cover program operations. Lower assessment rates were considered, but not recommended because they would not generate the income necessary to administer the programs.

A review of historical information and preliminary information pertaining to the upcoming crop year indicates that the producer price for the 2004–2005 season could range between $353 and $357 per ton for Washington apricots and between $1,230 and $1,550 per ton for Washington sweet cherries. Therefore, the estimated assessment revenue for the 2004–2005 fiscal period as a percentage of total producer revenue could range between 0.70 and 0.71 percent for Washington apricots and between 0.05 and 0.06 percent for Washington sweet cherries.

This action decreases the assessment obligation imposed on handlers. Assessments are applied uniformly on all handlers, and some of the costs may be passed on to producers. However, decreasing the assessment rates reduces the burden on handlers, and may reduce the burden on producers. In addition, the Committees' meetings were widely publicized throughout the Washington apricot and Washington sweet cherry industries and all interested persons

were invited to attend and participate in the Committees' deliberations on all issues. Like all Committee meetings, the May 17 and May 18, 2004, meetings were public meetings and all entities, both large and small, were able to express views on the issues. Finally, interested persons are invited to submit information on the regulatory and informational impacts of this action on small businesses.

This action imposes no additional reporting or recordkeeping requirements on either small or large Washington apricot or Washington sweet cherry handlers. As with all Federal marketing order programs, reports and forms are periodically reviewed to reduce information requirements and duplication by industry and public sector agencies.

USDA has not identified any relevant Federal rules that duplicate, overlap, or conflict with this rule.

A small business guide on complying with fruit, vegetable, and specialty crop marketing agreements and orders may be viewed at: *http://www.ama.usda.gov/fv/moab.html.* Any questions about the compliance guide should be sent to Jay Guerber at the previously mentioned address in the **FOR FURTHER INFORMATION CONTACT** section.

After consideration of all relevant material presented, including the information and recommendation submitted by the Committees and other available information, it is hereby found that this rule, as hereinafter set forth, will tend to effectuate the declared policy of the Act.

Pursuant to 5 U.S.C. 553, it is also found and determined upon good cause that it is impracticable, unnecessary, and contrary to the public interest to give preliminary notice prior to putting this rule into effect, and that good cause exists for not postponing the effective date of this rule until 30 days after publication in the **Federal Register** because: (1) The 2004–2005 fiscal period for both orders began on April 1, 2004, and both orders require that the rate of assessment apply to all assessable Washington apricots and Washington sweet cherries handled during such fiscal period; (2) the Committees need to have sufficient funds to pay for expenses which are incurred on a continuous basis; (3) handlers are aware of this action which was unanimously recommended by both Committees at public meetings and are similar to other assessment rate actions issued in past years; and (4) this interim final rule provides a 60-day comment period, and all comments timely received will be considered prior to finalization of this rule.

List of Subjects

7 CFR Part 922

Apricots, Marketing agreements, Reporting and recordkeeping requirements.

7 CFR Part 923

Cherries, Marketing agreements, Reporting and recordkeeping requirements.

■ For the reasons set forth in the preamble, 7 CFR parts 922 and 923 are amended as follows:

■ 1. The authority citation for 7 CFR parts 922 and 923 continues to read as follows:

Authority: 7 U.S.C. 601–674.

PART 922—APRICOTS GROWN IN DESIGNATED COUNTIES IN WASHINGTON

■ 2. Section 922.235 is revised to read as follows:

§ 922.235 Assessment rate.

On or after April 1, 2004, an assessment rate of $2.50 per ton is established for the Washington Apricot Marketing Committee.

PART 923—SWEET CHERRIES GROWN IN DESIGNATED COUNTIES IN WASHINGTON

■ 3. Section 923.236 is revised to read as follows:

§ 923.236 Assessment rate.

On or after April 1, 2004, an assessment rate of $0.75 per ton is established for the Washington Cherry Marketing Committee.

Dated: July 23, 2004.

Kenneth C. Clayton,

Associate Administrator, Agricultural Marketing Service.

[FR Doc. 04–17272 Filed 7–28–04; 8:45 am]

BILLING CODE 3410–02–P

NATIONAL CREDIT UNION ADMINISTRATION

12 CFR Part 705

Community Development Revolving Loan Program for Credit Unions

AGENCY: National Credit Union Administration (NCUA).

ACTION: Final rule.

SUMMARY: NCUA is amending its regulation pertaining to the Community Development Revolving Loan Program For Credit Unions (CDRLP) to permit student credit unions to participate in the program.

DATES: This final rule is effective August 30, 2004.

FOR FURTHER INFORMATION CONTACT: Frank Kressman, Staff Attorney, Office of General Counsel, at the above address or telephone: (703) 518–6540.

SUPPLEMENTARY INFORMATION:

A. Background

Part 705 of NCUA's regulations implements the CDRLP. 12 CFR part 705. The purpose of the CDRLP is to support the community development activities of participating credit unions. 12 CFR § 705.2. Participating credit unions are defined as those that are specifically involved in the stimulation of economic development and community revitalization activities in the communities they serve, whose membership consists of predominantly low-income members as reflected by a current low-income designation pursuant to § 701.34, § 741.204, or other applicable standards, and have submitted an application for participation and have been selected. 12 CFR § 705.3(b); 12 CFR § 701.34; 12 CFR § 741.204. The CDRLP achieves its purpose by making low interest loans and providing technical assistance to those credit unions. A credit union that participates in the CDRLP increases economic and employment opportunities for its low-income members.

Previously, NCUA took the position that although student credit unions are designated as low-income credit unions for purposes of receiving nonmember deposits, they did not qualify to participate in the CDRLP because they were not specifically involved in the stimulation of economic development activities and community revitalization. 61 FR 50694 (September 27, 1996); 58 FR 21642 (April 23, 1993). The NCUA believes this historical perspective underestimates the importance of student credit unions and the impact they have on the economic development and revitalization of the communities they serve. Student credit unions not only provide their members with valuable financial services generally not available but also a unique opportunity for financial education. NCUA believes that well run student credit unions would benefit greatly from participation in the CDRLP and, as a result, would be better able to serve their communities. Accordingly, in April 2004, NCUA issued a proposed rule to amend the CDRLP regulation to allow student credit unions to participate in the program. 69 FR 21443 (April 21, 2004).

B. Summary of Comments

NCUA received twenty-six comment letters regarding the proposed rule: eleven from federal credit unions, four from state credit unions, one from a private individual, and ten from credit union and student trade organizations. Twenty-one commenters fully supported the proposal. Four low-income designated credit unions involved in community development activities and one trade organization that represents community development credit unions opposed the proposal. Those opposed took the position that student credit unions do not fulfill the same mission as those credit unions for which the CDRLP was created. As noted above, NCUA believes that viewpoint underestimates the impact the few remaining student credit unions have on the communities they serve. Student credit unions not only provide their members with valuable financial services generally not available but also a unique opportunity for financial education. Also, NCUA believes a small CDRLP loan or technical assistance grant might help a student credit union survive or prosper while having a minor impact on CDRLP funding availability. Accordingly, NCUA adopts the amendments to part 705 as proposed.

Regulatory Procedures

Regulatory Flexibility Act

The Regulatory Flexibility Act requires NCUA to prepare an analysis to describe any significant economic impact a rule may have on a substantial number of small credit unions, defined as those under ten million dollars in assets. This rule permits student credit unions to participate in the CDRLP, without imposing any additional regulatory burden. The final amendments will not have a significant economic impact on a substantial number of small credit unions, and, therefore, a regulatory flexibility analysis is not required.

Paperwork Reduction Act

NCUA has determined that the final rule would not increase paperwork requirements under the Paperwork Reduction Act of 1995 and regulations of the Office of Management and Budget.

Executive Order 13132

Executive Order 13132 encourages independent regulatory agencies to consider the impact of their actions on state and local interests. In adherence to fundamental federalism principles, NCUA, an independent regulatory agency as defined in 44 U.S.C. 3502(5), voluntarily complies with the executive order. The final rule would not have substantial direct effects on the states, on the connection between the national government and the states, or on the distribution of power and responsibilities among the various levels of government. NCUA has determined that this final rule does not constitute a policy that has federalism implications for purposes of the executive order.

The Treasury and General Government Appropriations Act, 1999—Assessment of Federal Regulations and Policies on Families

The NCUA has determined that this final rule would not affect family well-being within the meaning of section 654 of the Treasury and General Government Appropriations Act, 1999, Pub. L. 105–277, 112 Stat. 2681 (1998).

Small Business Regulatory Enforcement Fairness Act

The Small Business Regulatory Enforcement Fairness Act of 1996 (Pub. L. 104–121) provides generally for congressional review of agency rules. A reporting requirement is triggered in instances where NCUA issues a final rule as defined by Section 551 of the Administrative Procedure Act. 5 U.S.C. 551. The Office of Management and Budget has determined that this rule is not a major rule for purposes of the Small Business Regulatory Enforcement Fairness Act of 1996.

List of Subjects in 12 CFR Part 705

Community development, Credit unions, Loan programs—housing and community development, Reporting and recordkeeping requirements, Technical assistance.

By the National Credit Union Administration Board on July 22, 2004.

Becky Baker,

Secretary of the Board.

■ For the reasons stated above, NCUA amends 12 CFR part 705 as follows:

PART 705—COMMUNITY DEVELOPMENT REVOLVING LOAN PROGRAM FOR CREDIT UNIONS

■ 1. The authority citation for part 705 continues to read as follows:

Authority: 12 U.S.C. 1772c–1; 42 U.S.C. 9822 and 9822 note.

§ 705.3 [Amended]

■ 2. Remove the parenthetical clause ''(excluding student credit unions)'' from § 705.3(b).

[FR Doc. 04–17257 Filed 7–28–04; 8:45 am]

BILLING CODE 7535–01–P

NATIONAL CREDIT UNION ADMINISTRATION

12 CFR Parts 721 and 724

Health Savings Accounts

AGENCY: National Credit Union Administration (NCUA).

ACTION: Final rule.

SUMMARY: The NCUA is amending its regulations governing a federal credit union's (FCU) authority to act as trustee or custodian to authorize FCUs to serve as trustee or custodian for Health Savings Accounts (HSA). The NCUA is issuing this final rule so that FCUs and their members can take advantage of the authority granted in the Medicare Prescription Drug, Improvement and Modernization Act of 2003 (Medicare Act). The Medicare Act authorizes the establishment of HSAs by individuals who obtain a qualifying high deductible health plan and specifies that an HSA may be established and maintained at an FCU. The final rule also amends NCUA's incidental powers regulation to include trustee or custodial services for HSAs as a pre-approved activity.

DATES: This rule is effective July 29, 2004.

FOR FURTHER INFORMATION CONTACT: Ross P. Kendall, Staff Attorney, at the above address, or telephone: (703) 518–6562.

SUPPLEMENTARY INFORMATION:

Background

On May 20, 2004, the NCUA Board requested comment on a proposed change to parts 724 and 721 of its regulations to permit federal credit unions (FCUs) to serve as trustee or custodian for health savings accounts (HSAs) established by their members. 69 FR 29907 (May 26, 2004). As authorized by Title XII of the Medicare Act, HSAs are available to anyone with a qualifying high deductible health plan. The NCUA proposed amending Part 724 of its regulations to specifically include HSAs in the listing of the types of accounts for which an FCU may fulfill the role of trustee or custodian on behalf of members. In addition, NCUA proposed to amend Part 724 to clarify that an FCU's authority to fulfill this role is not limited to pension or retirement accounts, but rather includes other

specific types of tax advantaged savings accounts, such as Coverdell Education Savings Accounts and HSAs. The amendment also clarifies that HSAs are among the types of accounts for which a member may direct investment decisions. Finally, NCUA proposed to amend Part 721 to include serving as trustee or custodian for member HSAs within the category of activities in which an FCU may engage as a preapproved exercise of its incidental powers.

NCUA received six comments regarding the proposed changes from three federal credit unions, two national credit union trade associations, and one credit union service provider.

Summary of Comments

The commenters uniformly supported all aspects of the proposal. All commenters noted that the proposed amendments would provide FCU members with a viable, tax-advantaged option for obtaining health insurance and health care at a reasonable cost. Three commenters noted the importance of the proposal in assuring that FCUs can maintain parity with banks and thrifts, each of which are able to offer these types of accounts to their customers. Two commenters specifically approved of the proposal to broaden the rules to refer to ''Tax Advantaged Savings Plans,'' which they believe is more accurate and will allow for a more flexible approach toward offering similar types of savings plans that may become available in the future. Three commenters noted their agreement with the NCUA's assessment, as discussed in the preamble to the proposed rule, that FCUs should not have difficulty in handling the administrative duties associated with serving as account trustee or custodian, based on their experience with IRAs.

Additional Guidance

Additional information about HSAs, including important details concerning the type of high deductible health plan an individual must obtain to qualify for an HSA, is available from the Public Affairs Office of the U.S. Department of the Treasury. The Treasury Department has also developed proposed model forms for use in establishing an HSA. The information and the proposed forms are directly accessible from the Treasury Web site, *http://www.ustreas.gov.*

Final Rule

In view of the comments, NCUA is adopting the proposed amendments as a final rule without change.

Regulatory Procedures

Regulatory Flexibility Act

The final rule conforms current regulations to recent changes in the federal tax law and implements authority for FCUs to offer HSAs to their members. The Board has determined and certifies that the rule will not have a significant economic impact on a substantial number of small credit unions. Accordingly, the NCUA Board has determined that a Regulatory Flexibility Analysis is not required.

Paperwork Reduction Act

NCUA has determined that the proposed rule would not increase paperwork requirements under the Paperwork Reduction Act of 1995 and regulations of the Office of Management and Budget.

Executive Order 13132

Executive Order 13132 encourages independent regulatory agencies to consider the impact of their actions on state and local interests. In adherence to fundamental federalism principles, NCUA, an independent regulatory agency as defined in 44 U.S.C. 3502(5), voluntarily complies with the executive order. The final rule would not have substantial direct effects on the states, on the connection between the national government and the states, or on the distribution of power and responsibilities among the various levels of government. NCUA has determined that this rule does not constitute a policy that has federalism implications for purposes of the executive order.

The Treasury and General Government Appropriations Act, 1999—Assessment of Federal Regulations and Policies on Families

The NCUA has determined that this final rule would not affect family well-being within the meaning of section 654 of the Treasury and General Government Appropriations Act, 1999, Pub. L. 105–277, 112 Stat. 2681 (1998).

Small Business Regulatory Enforcement Fairness Act

The Small Business Regulatory Enforcement Fairness Act of 1996 (Pub. L. 104–121) provides generally for congressional review of agency rules. A reporting requirement is triggered in instances where NCUA issues a final rule as defined by Section 551 of the Administrative Procedure Act. 5 U.S.C. 551. The Office of Management and Budget has determined that this rule is not a major rule for purposes of the Small Business Regulatory Enforcement Fairness Act of 1996.

List of Subjects

12 CFR Part 721

Incidental Powers.

12 CFR Part 724

Pensions, Reporting and recordkeeping, Trusts and trustees.

By the National Credit Union Administration Board, this 22nd day of July, 2004.

Becky Baker,

Secretary, NCUA Board.

■ For the reasons stated in the preamble, NCUA amends 12 CFR chapter VII as follows:

PART 721—INCIDENTAL POWERS

■ 1. The authority citation for Part 721 continues to read as follows:

Authority: 12 U.S.C. 1757(17), 1766 and 1789.

■ 2. Amend § 721.3 by revising paragraph (l) to read as follows:

§ 721.3 What categories of activities are preapproved as incidental powers necessary or requisite to carry on a credit union's business?

* * * * *

(1) *Trustee or custodial services.* Trustee or custodial services are services in which you are authorized to act under any written trust instrument or custodial agreement created or organized in the United States and forming part of a tax-advantaged savings plan, as authorized under the Internal Revenue Code. These services may include acting as a trustee or custodian for member retirement, education and health savings accounts.

PART 724—TRUSTEES AND CUSTODIANS OF PENSION PLANS

■ 3. The authority citation for Part 724 continues to read as follows:

Authority: 12 U.S.C. 1757, 1765, 1766 and 1787.

■ 4. Revise the part heading for Part 724 to read as follows:

PART 724—TRUSTEES AND CUSTODIANS OF CERTAIN TAX-ADVANTAGED SAVINGS PLANS

■ 5. Amend § 724.1 by revising the section heading and first two sentences to read as follows:

§ 724.1 Federal credit unions acting as trustees and custodians of certain tax-advantaged savings plans.

A federal credit union is authorized to act as trustee or custodian, and may

receive reasonable compensation for so acting, under any written trust instrument or custodial agreement created or organized in the United States and forming part of a tax-advantaged savings plan which qualifies or qualified for specific tax treatment under sections 223, 401(d), 408, 408A and 530 of the Internal Revenue Code (26 U.S.C. 223, 401(d), 408, 408A and 530), for its members or groups of its members, provided the funds of such plans are invested in share accounts or share certificate accounts of the Federal credit union. Federal credit unions located in a territory, including the trust territories, or a possession of the United States, or the Commonwealth of Puerto Rico, are also authorized to act as trustee or custodian for such plans, if authorized under sections 223, 401(d), 408, 408A and 530 of the Internal Revenue Code as applied to the territory or possession under similar provisions of territorial law. * * *

■ 6. Amend § 724.2 by revising the section heading and the introductory text to read as follows:

§ 724.2 Self-Directed Plans.

A federal credit union may facilitate transfers of plan funds to assets other than share and share certificates of the credit union, provided the conditions of § 724.1 are met and the following additional conditions are met: * * *

[FR Doc. 04–17259 Filed 7–28–04; 8:45 am]

BILLING CODE 7535–01–P

NATIONAL CREDIT UNION ADMINISTRATION

12 CFR Part 745

Share Insurance; Living Trust Accounts

AGENCY: National Credit Union Administration (NCUA).

ACTION: Final rule.

SUMMARY: NCUA is adopting as a final rule without change the interim rule amending Part 745 of its regulations concerning share insurance coverage for beneficial interests in living trust accounts. NCUA published the interim rule with a sixty-day comment period at 69 FR 8798, on February 26, 2004.

DATES: This final rule is effective on July 29, 2004.

FOR FURTHER INFORMATION CONTACT: Ross Kendall, Staff Attorney, Office of General Counsel, at the above address or telephone: (703) 518–6562.

SUPPLEMENTARY INFORMATION: Effective April 1, 2004, NCUA revised its living trust account rules to provide for insurance coverage of up to $100,000 per qualifying beneficiary who, as of the date of a credit union's failure, would become entitled to the living trust assets upon the owner's death, regardless of the existence of a defeating contingency affecting the beneficiary's interest. The NCUA Board determined that elimination of the defeating contingency provisions in the rule was beneficial to credit unions and their members because the operation of the rule was complex and not widely understood. The amendment also clarified that a credit union need not maintain records disclosing the names and interests of beneficiaries of living trusts. In addition, the amendment preserved parity between the NCUA and the Federal Deposit Insurance Corporation (FDIC), which administers the insurance fund that protects bank depositors and which had, in January of 2004, adopted a similar amendment to its rules.

Even though NCUA issued the amendment as an interim final rule, the Board established a sixty-day comment period in which interested members of the public could comment on any aspect of the amendment. We received five comments, all of which were fully supportive of the amendment. The commenters uniformly indicated the changes would result in elimination of confusion by credit unions and their members and an enhanced understanding of the scope and operation of the share insurance rules for beneficial interests in living trust accounts. The commenters also cited the benefit of having uniformity of insurance coverage between living trust accounts and other types of revocable trust accounts, as well as the benefit of parity between the NCUA and the FDIC.

In view of the comments and the benefits described herein and in the preamble to the interim rule, the NCUA Board has determined to adopt the rule as final without change.

List of Subjects in 12 CFR Part 745

Credit unions, Share insurance.

By the National Credit Union Administration Board on July 22, 2004.

Becky Baker,

Secretary of the Board.

PART 745—SHARE INSURANCE AND APPENDIX

■ Accordingly, the interim final rule amending 12 CFR 745.4, which was published at 69 FR 8798 on February 26, 2004, is adopted as a final rule without change.

[FR Doc. 04–17258 Filed 7–28–04; 8:45 am]

BILLING CODE 7535–01–P

DEPARTMENT OF TRANSPORTATION

Federal Aviation Administration

14 CFR Part 39

[Docket No. 2002–NM–215–AD; Amendment 39–13747; AD 2004–15–13]

RIN 2120–AA64

Airworthiness Directives; McDonnell Douglas Model DC–9–81 (MD–81), DC–9–82 (MD–82), DC–9–83 (MD–83), DC–9–87 (MD–87), and Model MD–88 Airplanes

AGENCY: Federal Aviation Administration, DOT.

ACTION: Final rule.

SUMMARY: This amendment adopts a new airworthiness directive (AD), applicable to certain McDonnell Douglas Model DC–9–81 (MD–81), DC–9–82 (MD–82), DC–9–83 (MD–83), DC–9–87 (MD–87), and Model MD–88 airplanes, that requires replacement of certain freeze protection ribbon heaters in the lavatory water supply system, and flushing, cleaning, and sterilizing the potable water system; disconnecting, coiling, and stowing the wiring of the freeze protection ribbon heater; or removal of freeze protection heaters. This action is necessary to prevent failure of freeze protection ribbon heaters, which could result in the charring, scorching, smoking, and shorting out of freeze protection ribbon heaters in the lavatory water supply system. This condition, if not corrected, could also result in electrical arcing of freeze protection ribbon heaters, leading to fire and damage to water lines and components under the lavatory sink. This action is intended to address the identified unsafe condition.

DATES: Effective September 2, 2004.

The incorporation by reference of a certain publication listed in the regulations is approved by the Director of the Federal Register as of September 2, 2004.

ADDRESSES: The service information referenced in this AD may be obtained from Boeing Commercial Airplanes, Long Beach Division, 3855 Lakewood Boulevard, Long Beach, California 90846, Attention: Data and Service Management, Dept. C1–L5A (D800–0024). This information may be examined at the Federal Aviation Administration (FAA), Transport Airplane Directorate, Rules Docket, 1601 Lind Avenue, SW., Renton, Washington; or at the FAA, Los Angeles Aircraft Certification Office, 3960 Paramount Boulevard, Lakewood, California; or at the National Archives

and Records Administration (NARA). For information on the availability of this material at NARA, call (202) 741–6030, or go to: *http://www.archives.gov/federal_register/code_of_federal_regulations/ibr_locations.html.*

FOR FURTHER INFORMATION CONTACT: Cheyenne Del Carmen, Aerospace Engineer, Systems and Equipment Branch, ANM–130L, FAA, Los Angeles Aircraft Certification Office, 3960 Paramount Boulevard, Lakewood, California 90712–4137; telephone (562) 627–5338; fax (562) 627–5210.

SUPPLEMENTARY INFORMATION: A proposal to amend part 39 of the Federal Aviation Regulations (14 CFR part 39) to include an airworthiness directive (AD) that is applicable to certain McDonnell Douglas Model DC–9–81 (MD–81), DC–9–82 (MD–82), DC–9–83 (MD–83), DC–9–87 (MD–87), and Model MD–88 airplanes was published in the **Federal Register** on December 5, 2003 (68 FR 67978). That action proposed to require replacement of certain freeze protection ribbon heaters in the lavatory water supply system, and flushing, cleaning, and sterilizing the potable water system; disconnecting, coiling, and stowing the wiring of the freeze protection ribbon heater; or removal of freeze protection heaters.

Comments

Interested persons have been afforded an opportunity to participate in the making of this amendment. Due consideration has been given to the comments received.

Request for Credit for Actions Accomplished per Alternative Service Bulletin

One commenter requests that the FAA give credit for actions accomplished in accordance with McDonnell Douglas MD–80 Service Bulletin 38–56, dated September 20, 1991. The commenter states that the McDonnell Douglas service bulletin refers to Jamco Corporation Service Bulletin MD080–25–829 as an additional source of service information for ''instructions to replace the modular lavatory potable water supply hose and ribbon heater.''

We agree, since we find that both Boeing Alert Service Bulletin MD80–25A381, dated August 5, 2002; and McDonnell Douglas MD–80 Service Bulletin 38–56, dated September 20, 1991, as revised by McDonnell Douglas MD–80 Service Bulletin Change Notification 38–56 CN1, dated June 11, 1992; refer to Jamco Corporation Service Bulletin MD080–25–829 as an additional source of service information for instructions on replacing the existing freeze protection ribbon heater in the lavatory water supply system with a new, reidentified heater hose assembly. Therefore, we have determined that completion of all the steps in the Accomplishment Instructions of McDonnell Douglas MD–80 Service Bulletin 38–56, dated September 20, 1991, is acceptable for compliance with the corresponding actions specified in paragraph (a)(1) of this final rule. We have added new paragraph (b) to this final rule to give credit for accomplishment of the alternative service bulletin.

Request To Use Latest Revision of Jamco Service Bulletin

Another commenter requests that we revise the proposed AD to reference Revision 6 of Jamco Corporation Service Bulletin MD080–25–829 as an additional source of service information. The commenter states that Revision 6 is ''in the approval cycle,'' and that if it is approved ''. . . and the AD restates the version of the Jamco service bulletin, there will be a problem.'' The commenter provided no justification for the request.

We agree with the commenter's request to reference Jamco Corporation Service Bulletin MD080–25–829, Revision 6, dated March 10, 2003. We find that Revision 6 of the Jamco service bulletin describes procedures that are essentially the same as the procedures described in Revision 5 of the Jamco service bulletin. Therefore, we have revised Note 1 of this final rule to reference Revision 6 of the Jamco service bulletin as an additional source of service information.

Explanation of Change to Proposed Rule

In Note 1 of the proposed AD, we inadvertently omitted the revision level for Jamco Corporation Service Bulletin MD080–25–829. We have revised this final rule to specify Revision 6.

Conclusion

After careful review of the available data, including the comments noted above, the FAA has determined that air safety and the public interest require the adoption of the rule with the changes previously described. The FAA has determined that these changes will neither increase the economic burden on any operator nor increase the scope of the AD.

Cost Impact

There are approximately 1,180 airplanes of the affected design in the worldwide fleet. The FAA estimates that 724 airplanes of U.S. registry will be affected by this AD, and that each airplane has approximately 3 lavatories, and that the average labor rate is $65 per work hour. Table 1 shows the estimated cost impact, based upon the action taken, for airplanes affected by this AD.

TABLE 1.—COST IMPACT

Action	Work hours per lavatory	Parts cost per lavatory	Cost per lavatory	Total cost
Replace the existing freeze protection ribbon heater with a new, reidentified heater hose assembly; and flush, clean, and sterilize the potable water system; or	6	$2,344 to $3,208 (Depending on lavatory module configuration).	$2,734 to $3,598 (Depending on lavatory module configuration).	$5,938,248 to $7,814,856 (Depending on lavatory configuration) or $8,202 to $10,794 per airpalne.
Disconnect, coil, and stow the wiring of the freeze protection ribbon heater; or	2	$0	$130	$282,360 or $390 per airpalne.
Remove the freeze protection ribbon heater	3	$0	$195	$423,540 or $585 per airpalne.

The cost impact figures discussed above are based on assumptions that no operator has yet accomplished any of the requirements of this AD action, and that no operator would accomplish those actions in the future if this AD were not adopted. The cost impact figures discussed in AD rulemaking actions represent only the time necessary to perform the specific actions actually required by the AD. These figures typically do not include incidental costs, such as the time required to gain access and close up, planning time, or time necessitated by other administrative actions.

Regulatory Impact

The regulations adopted herein will not have a substantial direct effect on the States, on the relationship between the national Government and the States, or on the distribution of power and responsibilities among the various levels of government. Therefore, it is determined that this final rule does not have federalism implications under Executive Order 13132.

For the reasons discussed above, I certify that this action (1) is not a ''significant regulatory action'' under Executive Order 12866; (2) is not a ''significant rule'' under DOT Regulatory Policies and Procedures (44 FR 11034, February 26, 1979); and (3) will not have a significant economic impact, positive or negative, on a substantial number of small entities under the criteria of the Regulatory Flexibility Act. A final evaluation has been prepared for this action and it is contained in the Rules Docket. A copy of it may be obtained from the Rules Docket at the location provided under the caption **ADDRESSES.**

List of Subjects in 14 CFR Part 39

Air transportation, Aircraft, Aviation safety, Incorporation by reference, Safety.

Adoption of the Amendment

■ Accordingly, pursuant to the authority delegated to me by the Administrator, the Federal Aviation Administration amends part 39 of the Federal Aviation Regulations (14 CFR part 39) as follows:

PART 39—AIRWORTHINESS DIRECTIVES

■ 1. The authority citation for part 39 continues to read as follows:

Authority: 49 U.S.C. 106(g), 40113, 44701.

§ 39.13 [Amended]

■ 2. Section 39.13 is amended by adding the following new airworthiness directive:

2004–15–13 McDonnell Douglas: Amendment 39–13747. Docket 2002–NM–215–AD.

Applicability: Model DC–9–81 (MD–81), DC–9–82 (MD–82), DC–9–83 (MD–83), DC–9–87 (MD–87), and MD–88 airplanes, as listed in Boeing Alert Service Bulletin MD80–25A381, dated August 5, 2002; certificated in any category.

Compliance: Required as indicated, unless accomplished previously.

To prevent failure of freeze protection ribbon heaters, which could result in the charring, scorching, smoking, and shorting out of freeze protection ribbon heaters in the lavatory water supply system and could also result in electrical arcing of freeze protection ribbon heaters, leading to fire and damage to water lines and components under the lavatory sink; accomplish the following:

Corrective Actions

(a) Within 18 months of the effective date of this AD, do the actions specified in paragraph (a)(1), (a)(2), or (a)(3) of this AD per the Accomplishment Instructions of Boeing Alert Service Bulletin MD80–25A381, dated August 5, 2002.

(1) Replace the existing freeze protection ribbon heater in the lavatory water supply system with a new, reidentified heater hose assembly. Flush, clean, and sterilize the potable water system; or

(2) Disconnect, coil, and stow the wiring of the freeze protection ribbon heater in the lavatory water supply system; or

(3) Remove the freeze protection ribbon heater from the lavatory water supply system.

Note 1: Boeing Alert Service Bulletin MD80–25A381 refers to Jamco Corporation Service Bulletin MD080–25–829, Revision 6, dated March 10, 2003, as an additional source of service information for instructions on replacing the existing freeze protection ribbon heater with a new, reidentified heater hose assembly for Model DC–9–81 (MD–81), DC–9–82 (MD–82), DC–9–83 (MD–83), DC–9–87 (MD–87), and Model MD–88 airplanes.

Credit for Actions Accomplished per Alternative Service Bulletin

(b) Actions accomplished before the effective date of this AD per McDonnell Douglas MD–80 Service Bulletin 38–56, dated September 20, 1991, as revised by McDonnell Douglas MD–80 Service Bulletin Change Notification 38–56 CN1, dated June 11, 1992, are acceptable for compliance with the requirements of paragraph (a)(1) of this AD.

Alternative Methods of Compliance

(c) In accordance with 14 CFR 39.19, the Manager, Los Angeles Aircraft Certification Office, FAA, is authorized to approve alternative methods of compliance (AMOCs) for this AD.

Incorporation by Reference

(d) Unless otherwise specified in this AD, the actions shall be done in accordance with Boeing Alert Service Bulletin MD80–25A381, dated August 5, 2002. This incorporation by reference was approved by the Director of the Federal Register in accordance with 5 U.S.C. 552(a) and 1 CFR part 51. Copies may be obtained from Boeing Commercial Airplanes, Long Beach Division, 3855 Lakewood Boulevard, Long Beach, California 90846, Attention: Data and Service Management, Dept. C1–L5A (D800–0024). Copies may be inspected at the FAA, Transport Airplane Directorate, 1601 Lind Avenue, SW., Renton, Washington; or at the FAA, Los Angeles Aircraft Certification Office, 3960 Paramount Boulevard, Lakewood, California; or at the National Archives and Records Administration (NARA). For information on the availability of this material at NARA, call (202) 741–6030, or go to: *http://www.archives.gov/federal_register/code_of_federal_regulations/ibr_locations.html.*

Effective Date

(e) This amendment becomes effective on September 2, 2004.

Issued in Renton, Washington, on July 15, 2004.

Kalene C. Yanamura,

Acting Manager, Transport Airplane Directorate, Aircraft Certification Service.

[FR Doc. 04–16916 Filed 7–28–04; 8:45 am]

BILLING CODE 4910–13–P

DEPARTMENT OF TRANSPORTATION

Federal Aviation Administration

14 CFR Part 39

[Docket No. 2003–NM–272–AD; Amendment 39–13746; AD 2004–15–12]

RIN 2120–AA64

Airworthiness Directives; Airbus Model A330–202, –203, –223, and –243 Airplanes, and A330–300 Series Airplanes

AGENCY: Federal Aviation Administration, DOT.

ACTION: Final rule.

SUMMARY: This amendment adopts a new airworthiness directive (AD), applicable to certain Airbus Model A330–202, –203, –223, and –243 airplanes, and A330–300 series airplanes, that requires modification of the control box of the auxiliary power unit (APU). This action is necessary to prevent uncommanded in-flight shutdown of the APU, which could result in loss of critical electrical systems when the airplane is operated in emergency electrical configuration, and consequent reduced controllability of the airplane. This action is intended to address the identified unsafe condition.

DATES: Effective September 2, 2004.

The incorporation by reference of a certain publication listed in the regulations is approved by the Director of the Federal Register as of September 2, 2004.

ADDRESSES: The service information referenced in this AD may be obtained from Airbus, 1 Rond Point Maurice Bellonte, 31707 Blagnac Cedex, France. This information may be examined at the Federal Aviation Administration (FAA), Transport Airplane Directorate, Rules Docket, 1601 Lind Avenue, SW., Renton, Washington; or at the National Archives and Records Administration (NARA). For information on the availability of this material at NARA, call (202) 741–6030, or go to: *http://www.archives.gov/federal_register/code_of_federal_regulations/ibr_locations.html*.

FOR FURTHER INFORMATION CONTACT: Tim Backman, Aerospace Engineer, International Branch, ANM–116, FAA, Transport Airplane Directorate, 1601 Lind Avenue, SW., Renton, Washington 98055–4056; telephone (425) 227–2797; fax (425) 227–1149.

SUPPLEMENTARY INFORMATION: A proposal to amend part 39 of the Federal Aviation Regulations (14 CFR part 39) to include an airworthiness directive (AD) that is applicable to certain Airbus Model A330–202, –203, –223, –243, and –300 series airplanes was published in the **Federal Register** on March 5, 2004 (69 FR 10369). That action proposed to require modification of the control box of the auxiliary power unit (APU).

Comments

Interested persons have been afforded an opportunity to participate in the making of this amendment. Due consideration has been given to the comments received.

Request to Change Applicability

One commenter, the airplane manufacturer, states that, according to French airworthiness directive 2003–350(B), dated September 17, 2003, the action specified in the proposed AD is applicable to Airbus Model A330–202, –203, –223, –243, and A330–301, –321, –322, –323, –341, –342, and –343 series airplanes, all serial numbers, on which Airbus Modification 50245 has not been embodied.

Although the commenter does not make a specific request, the FAA infers that the commenter is asking that the applicability specified in the proposed AD be changed to match the applicability specified in the French airworthiness directive. Per the model designation listed on the type certificate data sheet, specifying Airbus Model A330–300 ''series airplanes'' in the AD applicability encapsulates the airplane models identified as ''Airbus Model A330–301, –321, –322, –323, –341, –342, and –343 series airplanes.'' While we have not matched the French airworthiness directive, we have provided clarification throughout this AD preamble and in the applicability section of this AD by differentiating between ''airplanes'' and ''series airplanes.'' We have changed the applicability section to specify Airbus Model A330–202, –203, –223, and –243 airplanes, and A330–300 series airplanes.

In addition, the applicability section of the AD already excludes Airbus Modification 50245 and references the service bulletin, which includes the serial numbers. No change to the AD is made in this regard.

Request to Reference Later Revisions of Service Bulletin

The same commenter states that the proposed AD specifies accomplishment of the modification per Airbus Service Bulletin A330–49–3025, dated June 11, 2003; however, the referenced French airworthiness directive allows that any later approved revisions of the service bulletin are acceptable.

We infer that the commenter is asking that later revisions of Airbus Service Bulletin A330–49–3025 be added to the AD for accomplishment of the modification. We do not agree. We cannot approve the use of revisions of a service document issued after publication of the AD because doing so would violate Office of the Federal Register (OFR) regulations for approval of materials ''incorporated by reference'' in rules. In general terms, we are required by these OFR regulations to either publish the service document contents as part of the actual AD language; or submit the service document to the OFR for approval as ''referenced'' material, in which case we may only refer to such material in the text of an AD. To allow operators to use later revisions of the referenced service bulletin, we must either revise the AD to reference specific later revisions, or operators must request approval to use later revisions as an AMOC under the provisions of paragraph (b) of this AD. Accordingly, no change to the AD is made in this regard.

Clarification of Compliance Time

The same commenter states that the compliance time of 12 months after the effective date of the AD, as specified in the proposed AD, differs from the compliance time of September 30, 2004 (at the latest), as required by the referenced French airworthiness directive. The commenter states that its intention is simply to note the difference; no change is requested.

Although the commenter does not request a change, we provide the following explanation of the differences between the compliance times. We do not express compliance times in terms of calendar dates unless engineering analysis establishes a direct relationship between the date and the compliance time. Additionally, in consideration of the average utilization rate by the affected U.S. operators, and the practical aspects of an orderly modification of the U.S. fleet during regular maintenance periods, we determined that 12 months after the effective date of the AD is appropriate.

Request To Reduce Compliance Time

Another commenter asks that the implementation schedule for the modification of the control box of the APU, as specified in the proposed AD, be done more rapidly. The commenter states that, given the small number of airplanes identified in the proposed AD (nine), and the short time, and limited and easily acquired materials, implementation should be accomplished much sooner, without causing a burden to operators.

We do not agree that the compliance time for the modification should be reduced. In developing an appropriate compliance time for this action, we considered not only the degree of urgency associated with addressing the subject unsafe condition, but the practical aspect of doing the modification within an interval of time that parallels normal scheduled maintenance for the majority of affected operators. In addition, we find that adequate maintenance will provide an acceptable level of safety until the modification is done. However, operators are always permitted to accomplish the actions earlier than the compliance time specified in an AD. Accordingly, no change to the AD is made in this regard.

Conclusion

We have carefully reviewed the available data, including the comments noted above, and determined that air safety and the public interest require adopting the AD with the change described previously. This change will neither increase the economic burden on any operator nor increase the scope of the AD.

Cost Impact

We estimate that 9 airplanes of U.S. registry will be affected by this AD, that it will take about 1 work hour per airplane to do the required actions, and that the average labor rate is $65 per work hour. Required parts will cost

about $140 per airplane. Based on these figures, the cost impact of the AD on U.S. operators is estimated to be $1,845, or $205 per airplane.

The cost impact figure discussed above is based on assumptions that no operator has yet accomplished any of the requirements of this AD action, and that no operator would accomplish those actions in the future if this AD were not adopted. The cost impact figures discussed in AD rulemaking actions represent only the time necessary to perform the specific actions actually required by the AD. These figures typically do not include incidental costs, such as the time required to gain access and close up, planning time, or time necessitated by other administrative actions.

Regulatory Impact

The regulations adopted herein will not have a substantial direct effect on the States, on the relationship between the national Government and the States, or on the distribution of power and responsibilities among the various levels of government. Therefore, it is determined that this final rule does not have federalism implications under Executive Order 13132.

For the reasons discussed above, I certify that this action (1) is not a ''significant regulatory action'' under Executive Order 12866; (2) is not a ''significant rule'' under DOT Regulatory Policies and Procedures (44 FR 11034, February 26, 1979); and (3) will not have a significant economic impact, positive or negative, on a substantial number of small entities under the criteria of the Regulatory Flexibility Act. A final evaluation has been prepared for this action and it is contained in the Rules Docket. A copy of it may be obtained from the Rules Docket at the location provided under the caption **ADDRESSES.**

List of Subjects in 14 CFR Part 39

Air transportation, Aircraft, Aviation safety, Incorporation by reference, Safety.

Adoption of the Amendment

■ Accordingly, pursuant to the authority delegated to me by the Administrator, the Federal Aviation Administration amends part 39 of the Federal Aviation Regulations (14 CFR part 39) as follows:

PART 39—AIRWORTHINESS DIRECTIVES

■ 1. The authority citation for part 39 continues to read as follows:

Authority: 49 U.S.C. 106(g), 40113, 44701.

§ 39.13 [Amended]

■ 2. Section 39.13 is amended by adding the following new airworthiness directive:

2004–15–12 Airbus: Amendment 39–13746. Docket 2003–NM–272–AD.

Applicability: Model A330–202, –203, –223, and –243 airplanes, and A330–300 series airplanes; certificated in any category; on which Airbus Modification 50245 has not been done.

Compliance: Required as indicated, unless accomplished previously.

To prevent uncommanded in-flight shutdown of the auxiliary power unit (APU), which could result in loss of critical electrical systems when the airplane is operated in emergency electrical configuration, and consequent reduced controllability of the airplane, accomplish the following:

(a) Within 12 months after the effective date of this AD: Modify APU control box 5000VE by doing all the actions per the Accomplishment Instructions of Airbus Service Bulletin A330–49–3025, dated June 11, 2003.

Alternative Methods of Compliance

(b) In accordance with 14 CFR 39.19, the Manager, International Branch, ANM–116, FAA, Transport Airplane Directorate, is authorized to approve alternative methods of compliance for this AD.

Incorporation by Reference

(c) The actions shall be done in accordance with Airbus Service Bulletin A330–49–3025, dated June 11, 2003. This incorporation by reference was approved by the Director of the Federal Register in accordance with 5 U.S.C. 552(a) and 1 CFR part 51. Copies may be obtained from Airbus, 1 Rond Point Maurice Bellonte, 31707 Blagnac Cedex, France. Copies may be inspected at the FAA, Transport Airplane Directorate, 1601 Lind Avenue, SW., Renton, Washington; or at the National Archives and Records Administration (NARA). For information on the availability of this material at NARA, call (202) 741–6030, or go to: *http://www.archives.gov/federal_register/code_of_federal_regulations/ibr_locations.html.*

Note 1: The subject of this AD is addressed in French airworthiness directive 2003–350(B), dated September 17, 2003.

Effective Date

(d) This amendment becomes effective on September 2, 2004.

Issued in Renton, Washington, on July 19, 2004.

Kalene C. Yanamura,

Acting Manager, Transport Airplane Directorate, Aircraft Certification Service.

[FR Doc. 04–16915 Filed 7–28–04; 8:45 am]

BILLING CODE 4910–13–P

DEPARTMENT OF TRANSPORTATION (DOT)

Federal Aviation Administration

14 CFR Part 39

[Docket No. FAA–2004–18681; Directorate Identifier 2004–NM–56–AD; Amendment 39–13748; AD 2004–15–14]

RIN 2120–AA64

Airworthiness Directives; Airbus Model A319–131, –132, and –133; A320–231, –232, and –233; and A321–131 and –231 Series Airplanes

AGENCY: Federal Aviation Administration (FAA), DOT.

ACTION: Final rule; request for comments.

SUMMARY: The FAA is adopting a new airworthiness directive (AD) for certain Airbus Model A319–131, –132, and –133; A320–231, –232, and –233; and A321–131 and –231 series airplanes. This AD requires revising the airplane flight manual (AFM) to advise the flightcrew of procedures associated with the intermittent interruption of the electrical power. Under certain conditions, this AD also requires inspecting for signs of arcing and performing any necessary corrective actions. This AD also provides for optional terminating action for the requirements of the AD. This AD is prompted by reports of fretting and consequent arcing of the electrical harness of the integrated drive generator (IDG) at the pin-to-socket connector at the firewall. We are issuing this AD to prevent transient loss of certain systems and consequent reduced ability of the flightcrew to cope with adverse flight conditions.

DATES: Effective August 13, 2004.

The incorporation by reference of certain publications listed in the AD is approved by the Director of the Federal Register as of August 13, 2004.

We must receive comments on this AD by September 27, 2004.

ADDRESSES: Use one of the following addresses to submit comments on this AD.

- DOT Docket Web site: Go to *http://dms.dot.gov* and follow the instructions for sending your comments electronically.
- Government-wide rulemaking Web site: Go to *http://www.regulations.gov* and follow the instructions for sending your comments electronically.
- Mail: Docket Management Facility, U.S. Department of Transportation, 400 Seventh Street, SW., Nassif Building, room PL–401, Washington, DC 20590.

- Fax: (202) 493–2251.
- Hand Delivery: Room PL–401 on the plaza level of the Nassif Building, 400 Seventh Street, SW., Washington, DC, between 9 a.m. and 5 p.m., Monday through Friday, except Federal holidays.

For the service information identified in this AD, contact Airbus, 1 Rond Point Maurice Bellonte, 31707 Blagnac Cedex, France. You can examine this information at the National Archives and Records Administration (NARA). For information on the availability of this material at NARA, call (202) 741–6030, or go to *http://www.archives.gov/federal_register/code_of_federal_regulations/ibr_locations.html.*

Docket Management System (DMS)

The FAA has implemented new procedures for maintaining AD dockets electronically. As of May 17, 2004, new AD actions are posted on DMS and assigned a docket number. We track each action and assign a corresponding directorate identifier. The DMS AD docket number is in the form ''Docket No. FAA–2004–99999.'' The Transport Airplane Directorate identifier is in the form ''Directorate Identifier 2004–NM–999–AD.'' Each DMS AD docket also lists the directorate identifier (''Old Docket Number'') as a cross-reference for searching purposes.

Examining the Dockets

You can examine the AD docket on the Internet at *http://dms.dot.gov*, or in person at the Docket Management Facility office between 9 a.m. and 5 p.m., Monday through Friday, except Federal holidays. The Docket Management Facility office (telephone (800) 647–5227) is on the plaza level of the Nassif Building at the DOT street address stated in the **ADDRESSES** section. Comments will be available in the AD docket shortly after the DMS receives them.

FOR FURTHER INFORMATION CONTACT: Tim Dulin, Aerospace Engineer, International Branch, ANM–116, FAA, Transport Airplane Directorate, 1601 Lind Avenue, SW., Renton, Washington 98055–4056; telephone (425) 227–2141; fax (425) 227–1149.

SUPPLEMENTARY INFORMATION: The Direction Générale de l'Aviation Civile (DGAC), which is the airworthiness authority for France, notified the FAA of numerous reports of the intermittent interruption of the electrical power supply. The power interruption has been attributed to arcing of the electrical harness of the integrated drive generator (IDG) at the pin-to-socket connector at the firewall. The affected IDG connectors are installed on Airbus Model A319, A320, and A321 series airplanes equipped with International Aero Engines (IAE) Model V2500. In most of the incidents, the generator control unit (GCU) detected the arcing and shut down the associated IDG with only minor consequences. However, in some cases, the GCU—because of intermittent arcing—did not shut down the IDG. Investigation revealed that the arcing is due to fretting corrosion between the Cannon connector installed on the nacelle side of the firewall and the Souriau connector installed on the pylon side of the firewall. The following events have occurred or could occur during flight as a result of the intermittent loss of electrical power supply:

- Flickering cabin lights;
- Flickering primary flight and navigation displays;
- Transient disconnection of several systems (autopilot, yaw damper, auto throttle), triggering warnings from the electronic centralized aircraft monitoring (ECAM) displays and prompting diversions to the nearest available airport; and
- Loss of IDG power supply on the affected engine.

These conditions, if not corrected, could result in reduced ability of the flightcrew to cope with adverse flight conditions.

Relevant Service Information

Airbus has issued Temporary Revision (TR) 4.02.00/20 to the A318/319/320/321 Airplane Flight Manual (AFM). The TR, dated May 3, 2004, provides background information and operational recommendations regarding the intermittent interruption of electrical power supply.

Airbus has also issued Service Bulletin A320–71–1030, dated February 27, 2003. The service bulletin describes procedures for replacing the IDG harness on the nacelle side of the firewall to eliminate the pin-to-socket arcing. Specifically, harnesses having Cannon connectors are replaced with harnesses having Souriau connectors. The Souriau connector provides a better connection of the IDG electrical harness at the firewall. Airbus Service Bulletin A320–71–1030 refers to International Aero Engines Information Bulletin V2500–NAC–70–0736, dated January 28, 2003, as an additional source of information for the IDG harness/connector replacement.

The DGAC approved these service documents. The DGAC has issued French airworthiness directive F–2004–074, dated May 26, 2004, to ensure the continued airworthiness of these airplanes in France.

FAA's Determination and Requirements of This AD

These airplane models are manufactured in France and are type certificated for operation in the United States under the provisions of section 21.29 of the Federal Aviation Regulations (14 CFR 21.29) and the applicable bilateral airworthiness agreement. Pursuant to this bilateral airworthiness agreement, the DGAC has kept the FAA informed of the situation described above. We have examined the DGAC's findings, evaluated all pertinent information, and determined that AD action is necessary for products of this type design that are certificated for operation in the United States.

Therefore, we are issuing this AD to prevent transient loss of the systems connected to the affected arcing connector and consequent reduced ability of the flightcrew to cope with adverse flight conditions. This AD requires revising the AFM to advise the flightcrew of procedures associated with the intermittent interruption of the electrical power. Under certain conditions, this AD also requires inspecting for signs of arcing and performing any necessary corrective actions. This AD also provides for optional terminating action for the requirements of the AD. The actions must be done in accordance with the service information described previously, except as described below.

Differences Between FAA and DGAC Airworthiness Directive

The following differences have been coordinated between the FAA and the DGAC.

The French airworthiness directive does not require inspecting an IDG that has been shut down in accordance with the TR or that has been shut down automatically. We have determined that investigative and corrective actions (including an inspection for signs of arcing, and repair or replacement of any discrepant IDG harness/connector with a new harness/connector) are necessary due to the severity of the problem to prevent the unsafe condition from recurring. The inspections and corrective actions must be done in accordance with a method approved by the FAA.

The French airworthiness directive applies to all Model A319, A320, and A321 series airplanes equipped with IAE V2500 series engines—regardless of the type of connector installed. This AD, however, applies to only those airplanes having Cannon connectors on the

nacelle side of the firewall and Souriau connectors on the pylon side of the firewall. There have been no reported problems on airplanes equipped with Souriau connectors on both sides of the firewall. Therefore, the applicability of this AD excludes production airplanes that have been equipped with Souriau connectors on both sides of the firewall on both engines (accomplished via Airbus Modification 32943). This AD also includes a provision for replacing, on both engines, the IDG harnesses having Cannon connectors with IDG harnesses having Souriau connectors; this replacement would terminate the requirements of this AD.

Interim Action

We consider this AD interim action. We may consider further rulemaking at a later date to mandate replacement of the subject connectors, as specified in Airbus Service Bulletin A320–71–1030.

FAA's Determination of the Effective Date

An unsafe condition exists that requires the immediate adoption of this AD; therefore, providing notice and opportunity for public comment before the AD is issued is impracticable, and good cause exists to make this AD effective in less than 30 days.

Comments Invited

This AD is a final rule that involves requirements that affect flight safety and was not preceded by notice and an opportunity for public comment; however, we invite you to submit any written relevant data, views, or arguments regarding this AD. Send your comments to an address listed under **ADDRESSES.** Include ''Docket No. FAA–2004–18681; Directorate Identifier 2004–NM–56–AD'' at the beginning of your comments. We specifically invite comments on the overall regulatory, economic, environmental, and energy aspects of the AD. We will consider all comments received by the closing date and may amend the AD in light of those comments.

We will post all comments we receive, without change, to *http://dms.dot.gov,* including any personal information you provide. We will also post a report summarizing each substantive verbal contact with FAA personnel concerning this AD. Using the search function of our docket Web site, anyone can find and read the comments in any of our dockets, including the name of the individual who sent the comment (or signed the comment on behalf of an association, business, labor union, *etc.*). You can review the DOT's complete Privacy Act Statement in the **Federal Register** published on April 11, 2000 (65 FR 19477–78), or you can visit *http://dms.dot.gov*.

We are reviewing the writing style we currently use in regulatory documents. We are interested in your comments on whether the style of this document is clear, and your suggestions to improve the clarity of our communications with you. You can get more information about plain language at *http://www/faa.gov/language* and *http://www.plainlanguage.gov*.

Regulatory Findings

We have determined that this AD will not have federalism implications under Executive Order 13132. This AD will not have a substantial direct effect on the States, on the relationship between the national Government and the States, or on the distribution of power and responsibilities among the various levels of government.

For the reasons discussed above, I certify that the regulation:

1. Is not a ''significant regulatory action'' under Executive Order 12866;

2. Is not a ''significant rule'' under the DOT Regulatory Policies and Procedures (44 FR 11034, February 26, 1979); and

3. Will not have a significant economic impact, positive or negative, on a substantial number of small entities under the criteria of the Regulatory Flexibility Act.

We prepared a regulatory evaluation of the estimated costs to comply with this AD. See the **ADDRESSES** section for a location to examine the regulatory evaluation.

List of Subjects in 14 CFR Part 39

Air transportation, Aircraft, Aviation safety, Incorporation by reference, Safety.

Adoption of the Amendment

■ Accordingly, under the authority delegated to me by the Administrator, the FAA amends 14 CFR part 39 as follows:

PART 39—AIRWORTHINESS DIRECTIVES

■ 1. The authority citation for part 39 continues to read as follows:

Authority: 49 U.S.C. 106(g), 40113, 44701.

§ 39.13 [Amended]

■ 2. The FAA amends § 39.13 by adding the following new airworthiness directive (AD):

2004–15–14 Airbus: Amendment 39–13748. Docket No. FAA–2004–18681; Directorate Identifier 2004–NM–56–AD.

Effective Date

(a) This AD becomes effective August 13, 2004.

Affected ADs

(b) None.

Applicability

(c) This AD applies to Airbus Model A319–131, –132, and –133; A320–231, –232, and –233; and A321–131 and ''231 series airplanes; certificated in any category; except those airplanes on which Airbus Modification 32943 has been incorporated in production.

Unsafe Condition

(d) This AD was prompted by reports of intermittent interruption of the electrical power supply due to fretting and consequent arcing of the electrical harness of the integrated drive generator (IDG) at the pin-to-socket connector at the firewall. The FAA is issuing this AD to prevent the transient loss of certain systems and the consequent reduced ability of the flightcrew to cope with adverse flight conditions.

Compliance

(e) You are responsible for having the actions required by this AD performed within the compliance times specified, unless the actions have already been done.

Revision of Airplane Flight Manual (AFM)

(f) Within 10 days after the effective date of this AD, revise the Limitations section of the Airbus A318/319/320/321 AFM to include the information in Temporary Revision (TR) 4.02.00/20, dated May 3, 2004. This may be done by inserting a copy of the TR into the AFM. When the TR has been included in general revisions of the AFM, those general revisions may be inserted into the AFM, provided the relevant information in the general revisions is identical to that in the TR.

Post-IDG Shutdown Inspection

(g) If an IDG is shut down by the flightcrew in accordance with the TR procedures specified in paragraph (f) of this AD, or if an IDG is shut down automatically, do the actions specified in paragraph (g)(1) or (g)(2) of this AD.

(1) Before further flight, inspect the firewall connector of the affected IDG to detect signs of arcing, in accordance with a method approved by the Manager, International Branch, ANM–116, Transport Airplane Directorate, FAA. If any sign of arcing is detected: Before further flight, either repair the connector or replace the connector with a new connector, in accordance with a method approved by the Manager, International Branch, ANM–116.

(2) Operate the airplane with the affected IDG inoperative in accordance with the provisions and compliance periods specified in the FAA-approved Master Minimum Equipment List. Before further use of the affected IDG, do the actions specified in paragraph (g)(1) of this AD.

Terminating Action

(h) Replacement of the IDG harnesses and connectors on both engines in accordance

with Airbus Service Bulletin A320–71–1030, dated February 27, 2003, terminates the requirements of this AD.

Note 1: Airbus Service Bulletin A320–71–1030 refers to International Aero Engines Information Bulletin V2500–NAC–70–0736, dated January 28, 2003, as an additional source of information for the harness/connector replacement specified in paragraph (h) of this AD.

Alternative Methods of Compliance (AMOCs)

(i) The Manager, International Branch, ANM–116, has the authority to approve AMOCs for this AD, if requested in accordance with the procedures found in 14 CFR 39.19.

Material Incorporated by Reference

(j) Unless this AD specifies otherwise, you must use Temporary Revision 4.02.00/20, dated May 3, 2004, to the Airbus A318/319/320/321 Airplane Flight Manual; and Airbus Service Bulletin A320–71–1030, dated February 27, 2003; as applicable; to perform the actions that are required by this AD. (Only page 1 of the temporary revision contains the date of the document.) The Director of the Federal Register approves the incorporation by reference of these documents in accordance with 5 U.S.C. 552(a) and 1 CFR part 51. For copies of the documents, contact Airbus, 1 Rond Point Maurice Bellonte, 31707 Blagnac Cedex, France. You can review copies at the Docket Management Facility, U.S. Department of Transportation, 400 Seventh Street, SW., room PL–401, Nassif Building, Washington, DC; or at the National Archives and Records Administration (NARA). For information on the availability of this material at NARA, call (202) 741–6030, or go to *http://www.archives.gov/federal_register/code_of_federal_regulations/ibr_locations.html.*

Related Information

(k) French airworthiness directive F–2004–074, dated May 26, 2004, also addresses the subject of this AD.

Issued in Renton, Washington, on July 16, 2004.

Kalene C. Yanamura,

Acting Manager, Transport Airplane Directorate, Aircraft Certification Service

[FR Doc. 04–16914 Filed 7–28–04; 8:45 am]

BILLING CODE 4910–13–P

DEPARTMENT OF TRANSPORTATION

Federal Aviation Administration

14 CFR Part 39

[Docket No. 2003–NE–12–AD; Amendment 39–13434; AD 2004–01–20]

RIN 2120–AA64

Airworthiness Directives; Rolls-Royce plc RB211 Series Turbofan Engines; Correction

AGENCY: Federal Aviation Administration, DOT.

ACTION: Final rule; correction

SUMMARY: This document makes a correction to Airworthiness Directive (AD) 2004–01–20, which is applicable to Rolls-Royce plc (RR) RB211–22B series, RB211–524B, –524C2, –524D4, –524G2, –524G3, and –524H series, and RB211–535C and –535E series turbofan engines with high pressure compressor (HPC) stage 3 disc assemblies, part numbers (P/Ns) LK46210, LK58278, LK67634, LK76036, UL11706, UL15358, UL22577, UL22578, and UL24738 installed. That AD was published in the **Federal Register** on January 20, 2004 (69 FR 2661). The compliance information for the RB211–535C engine was inadvertently omitted from the AD. Also, under Related Information, the referenced service bulletin is not the latest revision. This document adds the omitted information and corrects the service bulletin reference. In all other respects, the original document remains the same.

EFFECTIVE DATE: Effective January 20, 2004.

FOR FURTHER INFORMATION CONTACT: Ian Dargin, Aerospace Engineer, Engine Certification Office, FAA, Engine and Propeller Directorate, 12 New England Executive Park, Burlington, MA 01803; telephone (781) 238–7178; fax (781) 238–7199.

SUPPLEMENTARY INFORMATION: A final rule AD, FR Doc. 04–759, applicable to RR RB211–22B series, RB211–524B, –524C2, –524D4, –524G2, –524G3, and –524H series, and RB211–535C and –535E series turbofan engines with HPC stage 3 disc assemblies, P/Ns LK46210, LK58278, LK67634, LK76036, UL11706, UL15358, UL22577, UL22578, and UL24738 installed, was published in the **Federal Register** on January 20, 2004 (69 FR 2661). The following corrections are needed:

§ 39.13 [Corrected]

■ On page 2663, in the first column, after paragraph (f)(4), add paragraph (f)(5) to read:

''(5) Discs in RB211–535C operation are unaffected by the interim rework cyclic band limits in Table 1 of this AD, but must meet the calendar life requirements of either paragraph (f)(1) or (f)(2) of this AD, as applicable.''

■ On page 2663, in the second column, in paragraph (j), in the 4th and 5th lines, change ''RB.211–72–9661, Revision 3, dated December 20, 1999'' to ''RB.211–72–9661, Revision 4, dated January 4, 2002''.

Issued in Burlington, MA, on July 21, 2004.

Francis A. Favara,

Acting Manager, Engine and Propeller Directorate, Aircraft Certification Service.

[FR Doc. 04–17283 Filed 7–28–04; 8:45 am]

BILLING CODE 4910–13–P

DEPARTMENT OF THE TREASURY

Office of Foreign Assets Control

31 CFR Part 541

Zimbabwe Sanctions Regulations

AGENCY: Office of Foreign Assets Control, Treasury.

ACTION: Interim final rule.

SUMMARY: The Office of Foreign Assets Control of the U.S. Department of the Treasury is adding new regulations to implement Executive Order 13288 of March 6, 2003, ''Blocking Property of Persons Undermining Democratic Processes or Institutions in Zimbabwe.''

DATES: *Effective Date:* July 29, 2004.

Comments: Written comments must be received no later than September 27, 2004.

ADDRESSES: You may submit comments by any of the following methods:

- Federal eRulemaking Portal: *http://www.regulations.gov.* Follow the instructions for submitting comments.
- Agency Web Site: *http://www.treas.gov/offices/enforcement/ofac/comment.html.*
- Fax: Chief of Records, 202/622–1657.
- Mail: Chief of Records, ATTN: Request for Comments, Office of Foreign Assets Control, Department of the Treasury, 1500 Pennsylvania Avenue, NW., Washington, DC 20220.

Instructions: All submissions received must include the agency name and the FR Doc. number that appears at the end of this document. Comments received will be posted without change to *http://www.treas.gov/ofac,* including any personal information provided. For detailed instructions on submitting comments and additional information on the rulemaking process, see the

''Public Participation'' heading of the **SUPPLEMENTARY INFORMATION** section of this document. To read background documents or comments received, go to *http://www.treas.gov/ofac.*

FOR FURTHER INFORMATION CONTACT: Chief of Licensing, tel.: 202/622–2480, Chief of Policy Planning and Program Management, tel.:202/622–4855, or Chief Counsel, tel.: 202/622–2410, Office of Foreign Assets Control, Department of the Treasury, Washington, DC 20220 (not toll free numbers).

SUPPLEMENTARY INFORMATION:

Electronic and Facsimile Availability

This file is available for download without charge in ASCII and Adobe Acrobat readable (*.PDF) formats at GPO Access. GPO Access supports HTTP, FTP, and Telnet at *fedbbs.access.gpo.gov.* It may also be accessed by modem dialup at 202/512–87 followed by typing ''/GO/FAC.'' Paper copies of this document can be obtained by calling the Government Printing Office at 202/512–1530. This document and additional information concerning the programs of the Office of Foreign Assets Control are available for downloading from the Office's Internet Home Page: *http://www.treas.gov/ofac,* or via FTP at *ofacftp.treas.gov.* Facsimiles of information are available through the Office's 24-hour fax-on-demand service: call 202/622–0077 using a fax machine, fax modem, or (within the United States) a touch-tone telephone.

Background

On March 6, 2003, the President, invoking the authority, *inter alia,* of the International Emergency Economic Powers Act (50 U.S.C. 1701–1706) (''IEEPA''), issued Executive Order 13288 (68 FR 11457, Mar. 10, 2003). The order declared a national emergency with respect to ''the actions and policies of certain members of the Government of Zimbabwe and other persons to undermine Zimbabwe's democratic processes or institutions, contributing to the deliberate breakdown in the rule of law in Zimbabwe, to politically motivated violence and intimidation in that country, and to political and economic instability in the southern African region * * *''

These regulations are promulgated in furtherance of the sanctions set forth in Executive Order 13288. Section 1 of the order blocks, with certain exceptions, all property and interests in property of the persons described in sections 1(a) and 1(b) that are in the United States, that hereafter come within the United States, or that are or hereafter come within the possession or control of United States persons, including their overseas branches. The persons described in section 1(a) are those listed in the Annex to the order. The persons described in section 1(b) are any persons determined by the Secretary of the Treasury, in consultation with the Secretary of State, to be owned or controlled by, or acting or purporting to act directly or indirectly for or on behalf of, any of the persons listed in the Annex to the order.

Section 2(a) of the order prohibits any transaction or dealing by a United States person or within the United States in property blocked pursuant to the order, including but not limited to, the making or receiving of any contribution of funds, goods or services to or for the benefit of a person listed in or designated pursuant to the order. Section 2(b) of the order prohibits any transaction by a United States person or within the United States that evades or avoids, or has the purpose of evading or avoiding, or attempts to violate, any of the prohibitions set forth in the order. Section 2(c) also prohibits any conspiracy formed to violate such prohibitions.

Section 4 of the order authorizes the Secretary of the Treasury, in consultation with the Secretary of State, to take such actions, including the promulgation of rules and regulations, as may be necessary to carry out the purposes of the order. Acting under authority delegated by the Secretary of the Treasury, the Department of the Treasury's Office of Foreign Assets Control (''OFAC'') is promulgating these Zimbabwe Sanctions Regulations, 31 CFR part 541 (the ''Regulations'').

Subpart B of the Regulations implements the prohibitions contained in sections 1 and 2 of the order. *See* §§ 541.201, 541.204. Appendix A to 31 CFR chapter V has previously been amended to incorporate the names of persons set forth in the Annex to the order. Persons identified in the Annex to the order or designated by or under the authority of the Secretary of the Treasury pursuant to the order are referred to throughout the Regulations as ''persons whose property or interests in property are blocked pursuant to § 541.201(a).'' Their names are or will be published on OFAC's Web site, announced in the **Federal Register** and incorporated on an ongoing basis into appendix A to 31 CFR chapter V, which lists persons that are the targets of various sanctions programs administered by OFAC.

Sections 541.202 and 541.203 of subpart B, respectively, detail the effect of transfers of blocked property in violation of the Regulations and set forth the requirement to hold blocked funds in interest-bearing blocked accounts. Section 541.205 of subpart B provides that all expenses incident to the maintenance of blocked physical property shall be the responsibility of the owners and operators of such property, and that such expenses shall not be met from blocked property. The section further provides that blocked property may, in the discretion of the Director of OFAC, be sold or liquidated and the net proceeds placed in a blocked interest-bearing account in the name of the owner of the property.

Section 541.206 of subpart B details transactions that are exempt from the prohibitions of part 541. These exemptions derive from the exemptions set out in sections 203(b)(1), (3) and (4) of IEEPA (50 U.S.C. 1702(b)(1), (3), and (4)) and relate to personal communications, the importation and exportation of information or informational materials, and travel.

Subpart C of part 541 defines key terms used throughout the Regulations, and subpart D sets forth interpretive sections regarding the general prohibitions contained in subpart B. Transactions otherwise prohibited under part 541 but found to be consistent with U.S. policy may be authorized by one of the general licenses contained in subpart E or by a specific license issued pursuant to the procedures described in subpart D of 31 CFR part 501.

Subpart F of part 541 refers to subpart C of part 501 for applicable record keeping and reporting requirements. Subpart G describes the civil and criminal penalties applicable to violations of the Regulations, as well as the procedures governing the imposition of a civil monetary penalty.

Subpart H of part 541 refers to subpart D of part 501 for applicable provisions relating to administrative procedures. Subpart I of the Regulations sets forth a Paperwork Reduction Act notice.

Public Participation

Because the Regulations involve a foreign affairs function, the provisions of Executive Order 12866 and the Administrative Procedure Act (5 U.S.C. 553) (the ''APA'') requiring notice of proposed rulemaking, opportunity for public participation, and delay in effective date are inapplicable. However, because of the importance of the issues addressed in these regulations, this rule is being issued in interim form and comments will be considered in the development of final regulations. Accordingly, the

Department encourages interested persons who wish to comment to do so at the earliest possible time to permit the fullest consideration of their views. Comments may address the impact of the Regulations on the submitter's activities, whether of a commercial, non-commercial or humanitarian nature, as well as changes that would improve the clarity and organization of the Regulations.

The period for submission of comments will close September 27, 2004. The Department will consider all comments postmarked before the close of the comment period. Comments received after the end of the comment period will be considered if possible, but their consideration cannot be assured. The Department will not accept public comments accompanied by a request that a part or all of the submission be treated confidentially because of its business proprietary nature or for any other reason. The Department will return such submission to the originator without considering them in the development of final regulations. In the interest of accuracy and completeness, the Department requires comments in written form.

All public comments on these Regulations will be a matter of public record. Copies of the public record concerning these Regulations will be made available no sooner than October 27, 2004, and will be obtainable from OFAC's Web site (*http://www.treas.gov/ofac*). If that service is unavailable, written requests for copies may be sent to: Office of Foreign Assets Control, U.S. Department of the Treasury, 1500 Pennsylvania Ave., NW., Washington, DC 20220, Attn: Chief, Records Division.

Because no notice of proposed rulemaking is required for this rule, the Regulatory Flexibility Act (5 U.S.C. 601–612) does not apply.

Paperwork Reduction Act

The collections of information related to the Regulations are contained in 31 CFR part 501 (the ''Reporting and Procedures Regulations''). Pursuant to the Paperwork Reduction Act of 1995 (44 U.S.C. 3507), those collections of information have been previously approved by the Office of Management and Budget under control number 1505–0164. An agency may not conduct or sponsor, and a person is not required to respond to, a collection of information unless the collection of information displays a valid control number.

List of Subjects in 31 CFR Part 541

Administrative practice and procedure, Banks, Banking, Blocking of assets, Penalties, Reporting and recordkeeping requirements, Securities, Services, Zimbabwe.

■ For the reasons set forth in the preamble, part 541 is added to 31 CFR chapter V to read as follows:

PART 541—ZIMBABWE SANCTIONS REGULATIONS

Subpart A—Relation of This Part to Other Laws and Regulations

Sec.
541.101 Relation of this part to other laws and regulations.

Subpart B—Prohibitions

541.201 Prohibited transactions involving blocked property.
541.202 Effect of transfers violating the provisions of this part.
541.203 Holding of funds in interest-bearing accounts; investment and reinvestment.
541.204 Evasions; attempts; conspiracies.
541.205 Expenses of maintaining blocked property; liquidation of blocked account.
541.206 Exempt transactions.

Subpart C—General Definitions

541.301 Blocked account; blocked property.
541.302 Effective date.
541.303 Entity.
541.304 Information or informational materials.
541.305 Interest.
541.306 Licenses; general and specific.
541.307 Person.
541.308 Property; property interest.
541.309 Transfer.
541.310 United States.
541.311 U.S. financial institution.
541.312 United States person; U.S. person.

Subpart D—Interpretations

541.401 Reference to amended sections.
541.402 Effect of amendment.
541.403 Termination and acquisition of an interest in blocked property.
541.404 Transactions incidental to a licensed transaction authorized.
541.405 Provision of services.
541.406 Offshore transactions.
541.407 Payments from blocked accounts to satisfy obligations prohibited.
541.408 Credit extended and cards issued by U.S. financial institutions.
541.409 Setoffs prohibited.

Subpart E—Licenses, Authorizations and Statements of Licensing Policy

541.501 General and specific licensing procedures.
541.502 Effect of license or authorization.
541.503 Exclusion from licenses.
541.504 Payments and transfers to blocked accounts in U.S. financial institutions.
541.505 Entries in certain accounts for normal service charges authorized.
541.506 Investment and reinvestment of certain funds.
541.507 Provision of certain legal services authorized.
541.508 Authorization of emergency medical services.

Subpart F—Reports

541.601 Records and reports.

Subpart G—Penalties

541.701 Penalties.
541.702 Prepenalty notice.
541.703 Response to prepenalty notice; informal settlement.
541.704 Penalty imposition or withdrawal.
541.705 Administrative collection; referral to United States Department of Justice.

Subpart H—Procedures

541.801 Procedures.
541.802 Delegation by the Secretary of the Treasury.

Subpart I—Paperwork Reduction Act

541.901 Paperwork Reduction Act notice.

Authority: 3 U.S.C. 301; 31 U.S.C. 321(b); 50 U.S.C. 1601–1651, 1701–1706; E.O. 13288, 68 FR 11457, 3 CFR, 2003 Comp., p. 186.

Subpart A—Relation of This Part to Other Laws and Regulations

§ 541.101 Relation of this part to other laws and regulations.

This part is separate from, and independent of, the other parts of this chapter, with the exception of part 501 of this chapter, the record keeping and reporting requirements and license application and other procedures of which apply to this part. Actions taken pursuant to part 501 of this chapter with respect to the prohibitions contained in this part are considered actions taken pursuant to this part. Differing foreign policy and national security circumstances may result in differing interpretations of similar language among the parts of this chapter. No license or authorization contained in or issued pursuant to those other parts authorizes any transaction prohibited by this part. No license or authorization contained in or issued pursuant to any other provision of law or regulation authorizes any transaction prohibited by this part. No license or authorization contained in or issued pursuant to this part relieves the involved parties from complying with any other applicable laws or regulations.

Subpart B—Prohibitions

§ 541.201 Prohibited transactions involving blocked property.

(a) Except as authorized by regulations, orders, directives, rulings, instructions, licenses or otherwise, and notwithstanding any contracts entered into or any license or permit granted prior to the effective date, property or interests in property of the following persons that are in the United States, that hereafter come within the United States, or that are or hereafter come within the possession or control of U.S.

persons, including their overseas branches, are blocked and may not be transferred, paid, exported, withdrawn or otherwise dealt in:

(1) Any person listed in the Annex to Executive Order 13288 of March 6, 2003 (68 FR 11457, March 10, 2003); and

(2) Any person determined by the Secretary of the Treasury, in consultation with the Secretary of State, to be owned or controlled by, or acting or purporting to act directly or indirectly for or on behalf of, any person listed in the Annex to Executive Order 13288.

Note to paragraph (a) of § 541.201: The names of persons whose property or interests in property are blocked pursuant to paragraph (a) of this section will be published on OFAC's Web site, announced in the Federal Register and incorporated on an ongoing basis with the identifier [ZIMBABWE] into appendix A to 31 CFR chapter V. Section 501.807 of this chapter V sets forth the procedures to be followed by persons seeking administrative reconsideration of their designation pursuant to paragraph (a)(2) of this section or who wish to assert that the circumstances resulting in designation no longer apply. Similarly, when a transaction results in the blocking of funds at a financial institution pursuant to this section and a party to the transaction believes the funds to have been blocked due to mistaken identity, that party may seek to have such funds unblocked pursuant to the administrative procedures set forth in § 501.806 of this chapter.

(b) Unless otherwise authorized by this part or by a specific license expressly referring to this section, any dealing in any security (or evidence thereof) held within the possession or control of a U.S. person and either registered or inscribed in the name of or known to be held for the benefit of any person whose property or interests in property are blocked pursuant to paragraph (a) of this section is prohibited. This prohibition includes but is not limited to the transfer (including the transfer on the books of any issuer or agent thereof), disposition, transportation, importation, exportation, or withdrawal of any such security or the endorsement or guaranty of signatures on any such security. This prohibition applies irrespective of the fact that at any time (whether prior to, on, or subsequent to the effective date) the registered or inscribed owner of any such security may have or might appear to have assigned, transferred, or otherwise disposed of the security.

§ 541.202 Effect of transfers violating the provisions of this part.

(a) Any transfer after the effective date that is in violation of any provision of this part or of any regulation, order, directive, ruling, instruction, or license issued pursuant to this part, and that involves any property or interest in property blocked pursuant to § 541.201(a), is null and void and shall not be the basis for the assertion or recognition of any interest in or right, remedy, power, or privilege with respect to such property or property interests.

(b) No transfer before the effective date shall be the basis for the assertion or recognition of any right, remedy, power, or privilege with respect to, or any interest in, any property or interest in property blocked pursuant to § 541.201(a), unless the person with whom such property is held or maintained, prior to that date, had written notice of the transfer or by any written evidence had recognized such transfer.

(c) Unless otherwise provided, an appropriate license or other authorization issued by or pursuant to the direction or authorization of the Director of the Office of Foreign Assets Control before, during, or after a transfer shall validate such transfer or make it enforceable to the same extent that it would be valid or enforceable but for the provisions of the International Emergency Economic Powers Act (50 U.S.C. 1701 et seq.), this part, and any regulation, order, directive, ruling, instruction, or license issued pursuant to this part.

(d) Transfers of property that otherwise would be null and void or unenforceable by virtue of the provisions of this section shall not be deemed to be null and void or unenforceable as to any person with whom such property was held or maintained (and as to such person only) in cases in which such person is able to establish to the satisfaction of the Director of the Office of Foreign Assets Control each of the following:

(1) Such transfer did not represent a willful violation of the provisions of this part by the person with whom such property was held or maintained;

(2) The person with whom such property was held or maintained did not have reasonable cause to know or suspect, in view of all the facts and circumstances known or available to such person, that such transfer required a license or authorization issued pursuant to this part and was not so licensed or authorized, or, if a license or authorization did purport to cover the transfer, that such license or authorization had been obtained by misrepresentation of a third party or withholding of material facts or was otherwise fraudulently obtained; and

(3) The person with whom such property was held or maintained filed with the Office of Foreign Assets Control a report setting forth in full the circumstances relating to such transfer promptly upon discovery that:

(i) Such transfer was in violation of the provisions of this part or any regulation, ruling, instruction, license, or other direction or authorization issued pursuant to this part;

(ii) Such transfer was not licensed or authorized by the Director of the Office of Foreign Assets Control; or

(iii) If a license did purport to cover the transfer, such license had been obtained by misrepresentation of a third party or withholding of material facts or was otherwise fraudulently obtained.

Note to paragraph (d) of § 541.202: The filing of a report in accordance with the provisions of paragraph (d)(3) of this section shall not be deemed evidence that the terms of paragraphs (d)(1) and (d)(2) of this section have been satisfied.

(e) Except to the extent otherwise provided by law or unless licensed pursuant to this part, any attachment, judgment, decree, lien, execution, garnishment, or other judicial process is null and void with respect to any property in which on or since the effective date there existed an interest of a person whose property or interests in property are blocked pursuant to § 541.201(a).

§ 541.203 Holding of funds in interest-bearing accounts; investment and reinvestment.

(a) Except as provided in paragraph (c) or (d) of this section, or as otherwise directed by the Office of Foreign Assets Control, any U.S. person holding funds, such as currency, bank deposits, or liquidated financial obligations, subject to § 541.201(a) shall hold or place such funds in a blocked interest-bearing account located in the United States.

(b)(1) For purposes of this section, the term *blocked interest-bearing account* means a blocked account:

(i) In a federally-insured U.S. bank, thrift institution, or credit union, provided the funds are earning interest at rates that are commercially reasonable; or

(ii) With a broker or dealer registered with the Securities and Exchange Commission under the Securities Exchange Act of 1934 (15 U.S.C. 78a *et seq.*), provided the funds are invested in a money market fund or in U.S. Treasury bills.

(2) For purposes of this section, a rate is commercially reasonable if it is the rate currently offered to other depositors on deposits or instruments of comparable size and maturity.

(3) Funds held or placed in a blocked account pursuant to this paragraph (b)

may not be invested in instruments the maturity of which exceeds 180 days. If interest is credited to a separate blocked account or subaccount, the name of the account party on each account must be the same.

(c) Blocked funds held in instruments the maturity of which exceeds 180 days at the time the funds become subject to § 541.201(a) may continue to be held until maturity in the original instrument, provided any interest, earnings, or other proceeds derived therefrom are paid into a blocked interest-bearing account in accordance with paragraph (b) or (d) of this section.

(d) Blocked funds held in accounts or instruments outside the United States at the time the funds become subject to § 541.201(a) may continue to be held in the same type of accounts or instruments, provided the funds earn interest at rates that are commercially reasonable.

(e) This section does not create an affirmative obligation for the holder of blocked tangible property, such as chattels or real estate, or of other blocked property, such as debt or equity securities, to sell or liquidate such property at the time the property becomes subject to § 541.201(a). However, the Office of Foreign Assets Control may issue licenses permitting or directing such sales in appropriate cases.

(f) Funds subject to this section may not be held, invested, or reinvested in a manner that provides immediate financial or economic benefit or access to any person whose property or interests in property are blocked pursuant to § 541.201(a), nor may their holder cooperate in or facilitate the pledging or other attempted use of blocked funds or other assets as collateral.

§ 541.204 Evasions; attempts; conspiracies.

(a) Except as otherwise authorized, and notwithstanding any contract entered into or any license or permit granted prior to the effective date, any transaction by any U.S. person or within the United States on or after the effective date that evades or avoids, has the purpose of evading or avoiding, or attempts to violate any of the prohibitions set forth in this part is prohibited.

(b) Except as otherwise authorized, and notwithstanding any contract entered into or any license or permit granted prior to the effective date, any conspiracy formed to violate the prohibitions set forth in this part is prohibited.

§ 541.205 Expenses of maintaining blocked property; liquidation of blocked account.

(a) Except as otherwise authorized, and notwithstanding the existence of any rights or obligations conferred or imposed by any international agreement or contract entered into or any license or permit granted before 12:01 eastern standard time, March 7, 2003, all expenses incident to the maintenance of physical property blocked pursuant to § 541.201(a) shall be the responsibility of the owners or operators of such property, which expenses shall not be met from blocked funds.

(b) Property blocked pursuant to § 541.201(a) may, in the discretion of the Director, Office of Foreign Assets Control, be sold or liquidated and the net proceeds placed in a blocked interest-bearing account in the name of the owner of the property.

§ 541.206 Exempt transactions.

(a) *Personal communications.* The prohibitions contained in this part do not apply to any postal, telegraphic, telephonic, or other personal communication that does not involve the transfer of anything of value.

(b) *Information or informational materials.* (1) The importation from any country and the exportation to any country of information or informational materials, as defined in § 541.304, whether commercial or otherwise, regardless of format or medium of transmission, are exempt from the prohibitions of this part.

(2) This section does not exempt from regulation or authorize transactions related to information or informational materials not fully created and in existence at the date of the transactions, or to the substantive or artistic alteration or enhancement of informational materials, or to the provision of marketing and business consulting services. Such prohibited transactions include, but are not limited to, payment of advances for information or informational materials not yet created and completed (with the exception of prepaid subscriptions for widely-circulated magazines and other periodical publications); provision of services to market, produce or co-produce, create, or assist in the creation of information or informational materials; and, with respect to information or informational materials imported from persons whose property or interests in property are blocked pursuant to § 541.201(a), payment of royalties with respect to income received for enhancements or alterations made by U.S. persons to such information or informational materials.

(3) This section does not exempt from regulation or authorize transactions incident to the exportation of software subject to the Export Administration Regulations, 15 CFR parts 730–774, or to the exportation of goods, technology or software, or to the provision, sale, or leasing of capacity on telecommunications transmission facilities (such as satellite or terrestrial network connectivity) for use in the transmission of any data. The exportation of such items or services and the provision, sale, or leasing of such capacity or facilities to a person whose property or interests in property are blocked pursuant to § 541.201(a) are prohibited.

(c) *Travel.* The prohibitions contained in this part do not apply to transactions ordinarily incident to travel to or from any country, including exportation or importation of accompanied baggage for personal use, maintenance within any country, including payment of living expenses and acquisition of goods or services for personal use, and arrangement or facilitation of such travel, including nonscheduled air, sea, or land voyages.

Subpart C—General Definitions

§ 541.301 Blocked account; blocked property.

The terms *blocked account* and *blocked property* shall mean any account or property subject to the prohibitions in § 541.201 held in the name of a person whose property or interests in property are blocked pursuant to § 541.201(a), or in which such person has an interest, and with respect to which payments, transfers, exportations, withdrawals, or other dealings may not be made or effected except pursuant to an authorization or license from the Office of Foreign Assets Control expressly authorizing such action.

§ 541.302 Effective date.

The term *effective date* refers to the effective date of the applicable prohibitions and directives contained in this part as follows:

(a) With respect to a person whose property or interests in property are blocked pursuant to § 541.201(a)(1), 12:01 eastern standard time, March 7, 2003;

(b) With respect to a person whose property or interests in property are blocked pursuant to § 541.201(a)(2), the earlier of the date on which either actual notice or constructive notice is received of such person's designation by the Secretary of the Treasury.

§ 541.303 Entity.

The term *entity* means a partnership, association, trust, joint venture, corporation, group, subgroup, or other organization.

§ 541.304 Information or informational materials.

(a) For purposes of this part, the term *information or informational materials* includes, but is not limited to, publications, films, posters, phonograph records, photographs, microfilms, microfiche, tapes, compact disks, CD ROMs, artworks, and news wire feeds.

Note to paragraph (a) of § 541.304: To be considered information or informational materials, artworks must be classified under chapter heading 9701, 9702, or 9703 of the Harmonized Tariff Schedule of the United States.

(b) The term *information or informational materials,* with respect to United States exports, does not include items:

(1) That were, as of April 30, 1994, or that thereafter become, controlled for export pursuant to section 5 of the Export Administration Act of 1979, 50 U.S.C. App. 2401–2420 (1979) (the ''EAA''), or section 6 of the EAA to the extent that such controls promote the nonproliferation or antiterrorism policies of the United States; or

(2) With respect to which acts are prohibited by 18 U.S.C. chapter 37.

§ 541.305 Interest.

Except as otherwise provided in this part, the term *interest* when used with respect to property (*e.g.*, ''an interest in property'') means an interest of any nature whatsoever, direct or indirect.

§ 541.306 Licenses; general and specific.

(a) Except as otherwise specified, the term *license* means any license or authorization contained in or issued pursuant to this part.

(b) The term *general license* means any license or authorization the terms of which are set forth in subpart E of this part.

(c) The term *specific license* means any license or authorization not set forth in subpart E of this part but issued pursuant to this part.

Note to § 541.306: See § 501.801 of this chapter on licensing procedures.

§ 541.307 Person.

The term *person* means an individual or entity.

§ 541.308 Property; property interest.

The terms *property* and *property interest* include, but are not limited to, money, checks, drafts, bullion, bank deposits, savings accounts, debts, indebtedness, obligations, notes, guarantees, debentures, stocks, bonds, coupons, any other financial instruments, bankers acceptances, mortgages, pledges, liens or other rights in the nature of security, warehouse receipts, bills of lading, trust receipts, bills of sale, any other evidences of title, ownership or indebtedness, letters of credit and any documents relating to any rights or obligations thereunder, powers of attorney, goods, wares, merchandise, chattels, stocks on hand, ships, goods on ships, real estate mortgages, deeds of trust, vendors' sales agreements, land contracts, leaseholds, ground rents, real estate and any other interest therein, options, negotiable instruments, trade acceptances, royalties, book accounts, accounts payable, judgments, patents, trademarks or copyrights, insurance policies, safe deposit boxes and their contents, annuities, pooling agreements, services of any nature whatsoever, contracts of any nature whatsoever, and any other property, real, personal, or mixed, tangible or intangible, or interest or interests therein, present, future or contingent.

§ 541.309 Transfer.

The term *transfer* means any actual or purported act or transaction, whether or not evidenced by writing, and whether or not done or performed within the United States, the purpose, intent, or effect of which is to create, surrender, release, convey, transfer, or alter, directly or indirectly, any right, remedy, power, privilege, or interest with respect to any property and, without limitation upon the foregoing, shall include the making, execution, or delivery of any assignment, power, conveyance, check, declaration, deed, deed of trust, power of attorney, power of appointment, bill of sale, mortgage, receipt, agreement, contract, certificate, gift, sale, affidavit, or statement; the making of any payment; the setting off of any obligation or credit; the appointment of any agent, trustee, or fiduciary; the creation or transfer of any lien; the issuance, docketing, filing, or levy of or under any judgment, decree, attachment, injunction, execution, or other judicial or administrative process or order, or the service of any garnishment; the acquisition of any interest of any nature whatsoever by reason of a judgment or decree of any foreign country; the fulfillment of any condition; the exercise of any power of appointment, power of attorney, or other power; or the acquisition, disposition, transportation, importation, exportation, or withdrawal of any security.

§ 541.310 United States.

The term *United States* means the United States, its territories and possessions, and all areas under the jurisdiction or authority thereof.

§ 541.311 U.S. financial institution.

The term *U.S. financial institution* means any U.S. entity (including its foreign branches) that is engaged in the business of accepting deposits, making, granting, transferring, holding, or brokering loans or credits, or purchasing or selling foreign exchange, securities, commodity futures or options, or procuring purchasers and sellers thereof, as principal or agent; including but not limited to, depository institutions, banks, savings banks, trust companies, securities brokers and dealers, commodity futures and options brokers and dealers, forward contract and foreign exchange merchants, securities and commodities exchanges, clearing corporations, investment companies, employee benefit plans, and U.S. holding companies, U.S. affiliates, or U.S. subsidiaries of any of the foregoing. This term includes those branches, offices and agencies of foreign financial institutions that are located in the United States, but not such institutions' foreign branches, offices, or agencies.

§ 541.312 United States person; U.S. person.

The term *United States person* or *U.S. person* means any United States citizen, permanent resident alien, entity organized under the laws of the United States or any jurisdiction within the United States (including foreign branches), or any person in the United States.

Subpart D—Interpretations

§ 541.401 Reference to amended sections.

Except as otherwise specified, reference to any provision in or appendix to this part or chapter or to any regulation, ruling, order, instruction, direction, or license issued pursuant to this part refers to the same as currently amended.

§ 541.402 Effect of amendment.

Unless otherwise specifically provided, any amendment, modification, or revocation of any provision in or appendix to this part or chapter or of any order, regulation, ruling, instruction, or license issued by or under the direction of the Director of the Office of Foreign Assets Control does not affect any act done or omitted, or any civil or criminal suit or proceeding commenced or pending prior to such amendment, modification,

or revocation. All penalties, forfeitures, and liabilities under any such order, regulation, ruling, instruction, or license continue and may be enforced as if such amendment, modification, or revocation had not been made.

§ 541.403 Termination and acquisition of an interest in blocked property.

(a) Whenever a transaction licensed or authorized by or pursuant to this part results in the transfer of property (including any property interest) away from a person, such property shall no longer be deemed to be property blocked pursuant to § 541.201(a), unless there exists in the property another interest that is blocked pursuant to § 541.201(a) or any other part of this chapter, the transfer of which has not been effected pursuant to license or other authorization.

(b) Unless otherwise specifically provided in a license or authorization issued pursuant to this part, if property (including any property interest) is transferred or attempted to be transferred to a person whose property or interests in property are blocked pursuant to § 541.201(a), such property shall be deemed to be property in which that person has an interest and therefore blocked.

§ 541.404 Transactions incidental to a licensed transaction authorized.

Any transaction ordinarily incident to a licensed transaction and necessary to give effect thereto is also authorized, except:

(a) An incidental transaction, not explicitly authorized within the terms of the license, by or with a person whose property or interests in property are blocked pursuant to § 541.201(a); or

(b) An incidental transaction, not explicitly authorized within the terms of the license, involving a debit to a blocked account or a transfer of blocked property.

§ 541.405 Provision of services.

(a) Except as provided in § 541.206, the prohibitions on transactions involving blocked property contained in § 541.201 apply to services performed in the United States or by U.S. persons, wherever located, including by an overseas branch of an entity located in the United States:

(1) On behalf of or for the benefit of a person whose property or interests in property are blocked pursuant to § 541.201(a); or

(2) With respect to property interests subject to § 541.201.

(b) *Example:* U.S. persons may not, except as authorized by or pursuant to this part, provide legal, accounting, financial, brokering, freight forwarding, transportation, public relations, or other services to a person whose property or interests in property are blocked pursuant to § 541.201(a).

Note to § 541.405: See §§ 541.507 and 541.508 on licensing policy with regard to the provision of, respectively, certain legal or medical services.

§ 541.406 Offshore transactions.

The prohibitions in § 541.201 on transactions involving blocked property apply to transactions by any U.S. person in a location outside the United States with respect to property that the U.S. person knows, or has reason to know, is held in the name of a person whose property or interests in property are blocked pursuant to § 541.201(a) or in which the U.S. person knows, or has reason to know, a person whose property or interests in property are blocked pursuant to § 541.201(a) has or has had an interest since the effective date.

§ 541.407 Payments from blocked accounts to satisfy obligations prohibited.

Pursuant to § 541.201, no debits may be made to a blocked account to pay obligations to U.S. persons or other persons, except as authorized pursuant to this part.

§ 541.408 Credit extended and cards issued by U.S. financial institutions.

The prohibition in § 541.201 on dealing in property subject to that section prohibits U.S. financial institutions from performing under any existing credit agreements, including, but not limited to, charge cards, debit cards, or other credit facilities issued by a U.S. financial institution to a person whose property or interests in property are blocked pursuant to § 541.201(a).

§ 541.409 Setoffs prohibited.

A setoff against blocked property (including a blocked account), whether by a U.S. bank or other U.S. person, is a prohibited transfer under § 541.201 if effected after the effective date.

Subpart E—Licenses, Authorizations and Statements of Licensing Policy

§ 541.501 General and specific licensing procedures.

For provisions relating to licensing procedures, see part 501, subpart D, of this chapter. Licensing actions taken pursuant to part 501 of this chapter with respect to the prohibitions contained in this part are considered actions taken pursuant to this part.

§ 541.502 Effect of license or authorization.

(a) No license or other authorization contained in this part, or otherwise issued by or under the direction of the Director of the Office of Foreign Assets Control, authorizes or validates any transaction effected prior to the issuance of the license, unless specifically provided in such license or authorization.

(b) No regulation, ruling, instruction, or license authorizes any transaction prohibited under this part unless the regulation, ruling, instruction or license is issued by the Office of Foreign Assets Control and specifically refers to this part. No regulation, ruling, instruction, or license referring to this part shall be deemed to authorize any transaction prohibited by any provision of this chapter unless the regulation, ruling, instruction, or license specifically refers to such provision.

(c) Any regulation, ruling, instruction, or license authorizing any transaction otherwise prohibited under this part has the effect of removing a prohibition contained in this part from the transaction, but only to the extent specifically stated by its terms. Unless the regulation, ruling, instruction, or license otherwise specifies, such an authorization does not create any right, duty, obligation, claim, or interest in, or with respect to, any property which would not otherwise exist under ordinary principles of law.

§ 541.503 Exclusion from licenses.

The Director of the Office of Foreign Assets Control reserves the right to exclude any person, property, or transaction from the operation of any license or from the privileges conferred by any license. The Director of the Office of Foreign Assets Control also reserves the right to restrict the applicability of any license to particular persons, property, transactions, or classes thereof. Such actions are binding upon all persons receiving actual or constructive notice of the exclusions or restrictions.

§ 541.504 Payments and transfers to blocked accounts in U.S. financial institutions.

Any payment of funds or transfer of credit in which a person whose property or interests in property are blocked pursuant to § 541.201(a) has any interest, that comes within the possession or control of a U.S. financial institution, must be blocked in an account on the books of that financial institution. A transfer of funds or credit by a U.S. financial institution between blocked accounts in its branches or

offices is authorized, provided that no transfer is made from an account within the United States to an account held outside the United States, and further provided that a transfer from a blocked account may only be made to another blocked account held in the same name.

Note to § 541.504: Refer to § 501.603 of this chapter for mandatory reporting requirements regarding financial transfers. *See* also § 541.203 concerning the obligation to hold blocked funds in interest-bearing accounts.

§ 541.505 Entries in certain accounts for normal service charges authorized.

(a) A U.S. financial institution is authorized to debit any blocked account held at that financial institution in payment or reimbursement for normal service charges owed it by the owner of that blocked account.

(b) As used in this section, the term *normal service charge* shall include charges in payment or reimbursement for interest due; cable, telegraph, internet, or telephone charges; postage costs; custody fees; small adjustment charges to correct bookkeeping errors; and, but not by way of limitation, minimum balance charges, notary and protest fees, and charges for reference books, photocopies, credit reports, transcripts of statements, registered mail, insurance, stationery and supplies, and other similar items.

§ 541.506 Investment and reinvestment of certain funds.

Subject to the requirements of § 541.203, U.S. financial institutions are authorized to invest and reinvest assets blocked pursuant to § 541.201, subject to the following conditions:

(a) The assets representing such investments and reinvestments are credited to a blocked account or subaccount which is held in the same name at the same U.S. financial institution, or within the possession or control of a U.S. person, but funds shall not be transferred outside the United States for this purpose;

(b) The proceeds of such investments and reinvestments shall not be credited to a blocked account or subaccount under any name or designation that differs from the name or designation of the specific blocked account or subaccount in which such funds or securities were held; and

(c) No immediate financial or economic benefit accrues (*e.g.*, through pledging or other use) to persons whose property or interests in property are blocked pursuant to § 541.201(a).

§ 541.507 Provision of certain legal services authorized.

(a) The provision of the following legal services to or on behalf of persons whose property or interests in property are blocked pursuant to § 541.201(a) is authorized, provided that all receipts of payment of professional fees and reimbursement of incurred expenses must be specifically licensed:

(1) Provision of legal advice and counseling on the requirements of and compliance with the laws of any jurisdiction within the United States, provided that such advice and counseling are not provided to facilitate transactions in violation of this part;

(2) Representation of persons when named as defendants in or otherwise made parties to domestic U.S. legal, arbitration, or administrative proceedings;

(3) Initiation and conduct of domestic U.S. legal, arbitration, or administrative proceedings in defense of property interests subject to U.S. jurisdiction;

(4) Representation of persons before any federal or state agency with respect to the imposition, administration, or enforcement of U.S. sanctions against such persons; and

(5) Provision of legal services in any other context in which prevailing U.S. law requires access to legal counsel at public expense.

(b) The provision of any other legal services to persons whose property or interests in property are blocked pursuant to § 541.201(a), not otherwise authorized in this part, requires the issuance of a specific license.

(c) Entry into a settlement agreement affecting property or interests in property or the enforcement of any lien, judgment, arbitral award, decree, or other order through execution, garnishment, or other judicial process purporting to transfer or otherwise alter or affect property or interests in property blocked pursuant to § 541.201(a) is prohibited except to the extent otherwise provided by law or unless specifically licensed in accordance with § 541.202(e).

§ 541.508 Authorization of emergency medical services.

The provision of nonscheduled emergency medical services in the United States to persons whose property or interests in property are blocked pursuant to § 541.201(a) is authorized, provided that all receipt of payment for such services must be specifically licensed.

Subpart F—Reports

§ 541.601 Records and reports.

For provisions relating to required records and reports, see part 501, subpart C, of this chapter. Recordkeeping and reporting requirements imposed by part 501 of this chapter with respect to the prohibitions contained in this part are considered requirements arising pursuant to this part.

Subpart G—Penalties

§ 541.701 Penalties.

(a) Attention is directed to section 206 of the International Emergency Economic Powers Act (the ''Act'') (50 U.S.C. 1705), which is applicable to violations of the provisions of any license, ruling, regulation, order, direction, or instruction issued by or pursuant to the direction or authorization of the Secretary of the Treasury pursuant to this part or otherwise under the Act. Section 206 of the Act, as adjusted by the Federal Civil Penalties Inflation Adjustment Act of 1990 (Public Law 101–410, as amended, 28 U.S.C. 2461 note), provides that:

(1) A civil penalty not to exceed $11,000 per violation may be imposed on any person who violates or attempts to violate any license, order, or regulation issued under the Act;

(2) Whoever willfully violates or willfully attempts to violate any license, order, or regulation issued under the Act, upon conviction, shall be fined not more than $50,000, and if a natural person, may also be imprisoned for not more than 10 years; and any officer, director, or agent of any corporation who knowingly participates in such violation may be punished by a like fine, imprisonment, or both.

(b) The criminal penalties provided in the Act are subject to increase pursuant to 18 U.S.C. 3571.

(c) Attention is also directed to 18 U.S.C. 1001, which provides that whoever, in any matter within the jurisdiction of the executive, legislative, or judicial branch of the Government of the United States, knowingly and willfully falsifies, conceals, or covers up by any trick, scheme, or device, a material fact, or makes any materially false, fictitious, or fraudulent statement or representation, or makes or uses any false writing or document knowing the same to contain any materially false, fictitious, or fraudulent statement or entry shall be fined under title 18, United States Code, or imprisoned not more than five years, or both.

(d) Violations of this part may also be subject to relevant provisions of other applicable laws.

§ 541.702 Prepenalty notice.

(a) *When required.* If the Director of the Office of Foreign Assets Control has reason to believe that there has occurred a violation of any provision of this part or a violation of the provisions of any license, ruling, regulation, order, direction, or instruction issued by or pursuant to the direction or authorization of the Secretary of the Treasury pursuant to this part or otherwise under the International Emergency Economic Powers Act, and the Director determines that further proceedings are warranted, the Director shall notify the alleged violator of the agency's intent to impose a monetary penalty by issuing a prepenalty notice. The prepenalty notice shall be in writing. The prepenalty notice may be issued whether or not another agency has taken any action with respect to the matter.

(b) *Contents of notice.*—(1) *Facts of violation.* The prepenalty notice shall describe the violation, specify the laws and regulations allegedly violated, and state the amount of the proposed monetary penalty.

(2) *Right to respond.* The prepenalty notice also shall inform the respondent of the respondent's right to make a written presentation within the applicable 30 day period set forth in § 541.703 as to why a monetary penalty should not be imposed or why, if imposed, the monetary penalty should be in a lesser amount than proposed.

(c) *Informal settlement prior to issuance of prepenalty notice.* At any time prior to the issuance of a prepenalty notice, an alleged violator may request in writing that, for a period not to exceed sixty (60) days, the agency withhold issuance of the prepenalty notice for the exclusive purpose of effecting settlement of the agency's potential civil monetary penalty claims. In the event the Director grants the request, under terms and conditions within his discretion, the Office of Foreign Assets Control will agree to withhold issuance of the prepenalty notice for a period not to exceed 60 days and will enter into settlement negotiations of the potential civil monetary penalty claim.

§ 541.703 Response to prepenalty notice; informal settlement.

(a) *Deadline for response.* The respondent may submit a response to the prepenalty notice within the applicable 30-day period set forth in this paragraph. The Director may grant, at his discretion, an extension of time in which to submit a response to the prepenalty notice. The failure to submit a response within the applicable time period set forth in this paragraph shall be deemed to be a waiver of the right to respond.

(1) *Computation of time for response.* A response to the prepenalty notice must be postmarked or date-stamped by the U.S. Postal Service (or foreign postal service, if mailed abroad) or courier service provider (if transmitted to OFAC by courier) on or before the 30th day after the postmark date on the envelope in which the prepenalty notice was mailed. If the respondent refused delivery or otherwise avoided receipt of the prepenalty notice, a response must be postmarked or date-stamped on or before the 30th day after the date on the stamped postal receipt maintained at the Office of Foreign Assets Control. If the prepenalty notice was personally delivered to the respondent by a non-U.S. Postal Service agent authorized by the Director, a response must be postmarked or date-stamped on or before the 30th day after the date of delivery.

(2) *Extensions of time for response.* If a due date falls on a federal holiday or weekend, that due date is extended to include the following business day. Any other extensions of time will be granted, at the Director's discretion, only upon the respondent's specific request to the Office of Foreign Assets Control.

(b) *Form and method of response.* The response must be submitted in typewritten form and signed by the respondent or a representative thereof. The response need not be in any particular form. A copy of the written response may be sent by facsimile, but the original also must be sent to the Office of Foreign Assets Control Civil Penalties Division by mail or courier and must be postmarked or date-stamped in accordance with paragraph (a) of this section.

(c) *Contents of response.* A written response must contain information sufficient to indicate that it is in response to the prepenalty notice.

(1) A written response must include the respondent's full name, address, telephone number, and facsimile number, if available, or those of the representative of the respondent.

(2) A written response should either admit or deny each specific violation alleged in the prepenalty notice and also state if the respondent has no knowledge of a particular violation. If the written response fails to address any specific violation alleged in the prepenalty notice, that alleged violation shall be deemed to be admitted.

(3) A written response should include any information in defense, evidence in support of an asserted defense, or other factors that the respondent requests the Office of Foreign Assets Control to consider. Any defense or explanation previously made to the Office of Foreign Assets Control or any other agency must be repeated in the written response. Any defense not raised in the written response will be considered waived. The written response also should set forth the reasons why the respondent believes the penalty should not be imposed or why, if imposed, it should be in a lesser amount than proposed.

(d) *Failure to respond.* Where OFAC receives no response to a prepenalty notice within the applicable time period set forth in paragraph (a) of this section, a penalty notice generally will be issued, taking into account the mitigating and/or aggravating factors present in the record. If there are no mitigating factors present in the record, or the record contains a preponderance of aggravating factors, the proposed prepenalty amount generally will be assessed as the final penalty.

(e) *Informal settlement.* In addition to or as an alternative to a written response to a prepenalty notice, the respondent or respondent's representative may contact the Office of Foreign Assets Control as advised in the prepenalty notice to propose the settlement of allegations contained in the prepenalty notice and related matters. However, the requirements set forth in paragraph (f) of this section as to oral communication by the representative must first be fulfilled. In the event of settlement at the prepenalty stage, the claim proposed in the prepenalty notice will be withdrawn, the respondent will not be required to take a written position on allegations contained in the prepenalty notice, and the Office of Foreign Assets Control will make no final determination as to whether a violation occurred. The amount accepted in settlement of allegations in a prepenalty notice may vary from the civil penalty that might finally be imposed in the event of a formal determination of violation. In the event no settlement is reached, the time limit specified in paragraph (a) of this section for written response to the prepenalty notice will remain in effect unless additional time is granted by the Office of Foreign Assets Control.

(f) *Representation.* A representative of the respondent may act on behalf of the respondent, but any oral communication with the Office of Foreign Assets Control prior to a written submission regarding the specific allegations contained in the prepenalty

notice must be preceded by a written letter of representation, unless the prepenalty notice was served upon the respondent in care of the representative.

§ 541.704 Penalty imposition or withdrawal.

(a) *No violation.* If, after considering any response to the prepenalty notice and any relevant facts, the Director of the Office of Foreign Assets Control determines that there was no violation by the respondent named in the prepenalty notice, the Director shall notify the respondent in writing of that determination and of the cancellation of the proposed monetary penalty.

(b) *Violation.* (1) If, after considering any written response to the prepenalty notice, or default in the submission of a written response, and any relevant facts, the Director of the Office of Foreign Assets Control determines that there was a violation by the respondent named in the prepenalty notice, the Director is authorized to issue a written penalty notice to the respondent of the determination of the violation and the imposition of the monetary penalty.

(2) The penalty notice shall inform the respondent that payment or arrangement for installment payment of the assessed penalty must be made within 30 days of the date of mailing of the penalty notice by the Office of Foreign Assets Control.

(3) The penalty notice shall inform the respondent of the requirement to furnish the respondent's taxpayer identification number pursuant to 31 U.S.C. 7701 and that such number will be used for purposes of collecting and reporting on any delinquent penalty amount.

(4) The issuance of the penalty notice finding a violation and imposing a monetary penalty shall constitute final agency action. The respondent has the right to seek judicial review of that final agency action in federal district court.

§ 541.705 Administrative collection; referral to United States Department of Justice.

In the event that the respondent does not pay the penalty imposed pursuant to this part or make payment arrangements acceptable to the Director of the Office of Foreign Assets Control within 30 days of the date of mailing of the penalty notice, the matter may be referred for administrative collection measures by the Department of the Treasury or to the United States Department of Justice for appropriate action to recover the penalty in a civil suit in a federal district court.

Subpart H—Procedures

§ 541.801 Procedures.

For license application procedures and procedures relating to amendments, modifications, or revocations of licenses; administrative decisions; rulemaking; and requests for documents pursuant to the Freedom of Information and Privacy Acts (5 U.S.C. 552 and 552a), see part 501, subpart D, of this chapter.

§ 541.802 Delegation by the Secretary of the Treasury.

Any action that the Secretary of the Treasury is authorized to take pursuant to Executive Order 13288 of March 6, 2003 (68 FR 11457, March 10, 2003), and any further Executive orders relating to the national emergency declared therein, may be taken by the Director of the Office of Foreign Assets Control or by any other person to whom the Secretary of the Treasury has delegated authority so to act.

Subpart I—Paperwork Reduction Act

§ 541.901 Paperwork Reduction Act notice.

For approval by the Office of Management and Budget (''OMB'') under the Paperwork Reduction Act of 1995 (44 U.S.C. 3507) of information collections relating to record keeping and reporting requirements, licensing procedures (including those pursuant to statements of licensing policy), and other procedures, see § 501.901 of this chapter. An agency may not conduct or sponsor, and a person is not required to respond to, a collection of information unless it displays a valid control number assigned by OMB.

Dated: May 21, 2004.

R. Richard Newcomb,

Director, Office of Foreign Assets Control.

Approved: July 1, 2004.

Juan C. Zarate,

Deputy Assistant Secretary (Terrorist Financing and Financial Crimes), Department of the Treasury.

[FR Doc. 04–17206 Filed 7–26–04; 11:20 am]

BILLING CODE 4810–25–P

DEPARTMENT OF HOMELAND SECURITY

Coast Guard

33 CFR Part 165

[COTP Jacksonville 04–096]

RIN 1625–AA00

Safety Zone; Lake Eustis, Eustis, FL

AGENCY: Coast Guard, DHS.

ACTION: Temporary final rule.

SUMMARY: The Coast Guard is establishing a temporary fixed safety zone extending 500 yards in all directions around a fireworks barge located at the northeast corner of Lake Eustis at Ferran Park. The safety zone is established for the Great American Picnic and Firework scheduled for August 6, 2004. This rule is needed to protect participants, vendors, and spectators from the hazards associated with the launching of fireworks.

DATES: This rule is effective from 8:30 p.m. until 9:30 p.m. on August 6, 2004.

ADDRESSES: Documents mentioned in this preamble as being available in the docket, are part of docket [COTP Jacksonville 04–096] and are available for inspection and copying at Coast Guard Marine Safety Office Jacksonville, 7820 Arlington Expressway, Suite 400, Jacksonville, Florida, 32211, between 8 a.m. and 4 p.m., Monday through Friday, except Federal Holidays.

FOR FURTHER INFORMATION CONTACT: Lieutenant Junior Grade Carol Swinson at Coast Guard Marine Safety Office Jacksonville, FL, tel: (904) 232–2640, ext. 155.

SUPPLEMENTARY INFORMATION:

Regulatory Information

We did not publish a notice of proposed rulemaking (NPRM) for this regulation. Under 5 U.S.C. 553 (b)(B), the Coast Guard finds that good cause exists for not publishing a NRPM. Publishing a NPRM, which would incorporate a comment period before a final rule could be issued, and delaying the rule's effective date is contrary to public safety because immediate action is necessary to protect the public and waters of the United States.

For the same reason, under 5 U.S.C. 553(d)(3), the Coast Guard finds that good cause exists for making this rule effective less than 30 days after publication in the **Federal Register**. The Coast Guard will issue a broadcast notice to mariners and may place Coast Guard vessels in the vicinity of this zone to advise mariners of the restriction.

Background and Purpose

This rule is needed to protect spectator craft in the vicinity of the fireworks presentation from the hazards associated with the transport, storage, and launching of fireworks. Anchoring, mooring, or transiting within this zone is prohibited, unless authorized by the Captain of the Port, Jacksonville, FL. The temporary safety zone encompasses all waters within a 500 yard radius

around the fireworks barge during the storage, preparation, transport, and launching of fireworks. During the fireworks show, the barge will be located at approximate position 28° 85. 6768′ N, 081° 69.152′ W.

Regulatory Evaluation

This regulation is not a significant regulatory action under section 3(f) of Executive Order 12866, Regulatory Planning and Review, and does not require an assessment of potential cost and benefits under section 6(a)(3) of that Order. The Office of Management and Budget has exempted it from review under the order. It is not significant under the regulatory policies and procedures of the Department of Homeland Security (DHS) because these regulations will only be in effect for a short period of time, and the impacts on routine navigation are expected to be minimal.

Small Entities

Under the Regulatory Flexibility Act (5 U.S.C. 601–612), we considered whether this rule would have a significant economic impact on a substantial number of small entities. ''Small entities'' include small businesses, not-for-profit organizations that are independently owned and operated and are not dominant in their field, and governmental jurisdictions with populations of less than 50,000.

The Coast Guard certifies under section 5 U.S.C. 605 (b) that this rule will not have a significant economic impact upon a substantial number of small entities because the regulation will only be enforced for approximately one hour the day it is in effect and the impact on routine navigation are expected to be minimal because traffic may transit safely around the zone and traffic may enter upon permission of the Captain of the Port or his representative.

Assistance for Small Entities

Under section 213(a) of the Small Business Regulatory Enforcement Fairness Act of 1996 (Public Law 104–121), we offer to assist small entities in understanding the rule so that they can better evaluate its effects on them and participate in the rulemaking process. If the rule will affect your small business, organization, or government jurisdiction and you have questions concerning its provisions or options for compliance, please contact the person listed under **FOR FURTHER INFORMATION CONTACT** for assistance in understanding this rule.

Small businesses may send comments on the actions of Federal employees who enforce, or otherwise determine compliance with, Federal regulations to the Small Business and Agriculture Regulatory Enforcement Ombudsman and the Regional Small each agency's responsiveness to small business. If you wish to comment on actions by employees of the Coast Guard, call 1–888-REG-FAIR (1–888–734–3247).

Collection of Information

This rule calls for no new collection of information under the Paperwork Reduction Act of 1995 (44 U.S.C. 3501–3520).

Federalism

A rule has implications for federalism under Executive Order 13132, Federalism, if it has a substantial direct effect on State or local governments and would either preempt State law or impose a substantial direct cost of compliance on them. We have analyzed this rule under that Order and have determined that it does not have implications for federalism.

Unfunded Mandates Reform Act

The Unfunded Mandates Reform Act of 1995 (2 U.S.C. 1531–1538) requires Federal agencies to assess the effects of their discretionary regulatory actions. In particular, the Act addresses actions that my result in the expenditure by State, local, or tribal government, in the aggregate, or by the private sector of $100,000,000 or more in any one year. Although this rule will not result in such an expenditure, we do discuss the effects of this rule elsewhere in this preamble.

Taking of Private Property

This rule will not effect a taking of private property or otherwise have taking implications under Executive Order 12630, Governmental Actions and Interference with Constitutionally Protected Property Rights.

Civil Justice Reform

This rule meets applicable standards in sections 3(a) and 3(b)(2) of Executive Order 12988, Civil Justice Reform, to minimize litigation, eliminate ambiguity, and reduce burden.

Protection of Children

We have analyzed this rule under Executive Order 13045, Protection of Children from Environmental Health Risks and Safety Risks. This rule is not an economically significant rule and does not create an environmental risk to health or safety that may disproportionately affect children.

Environment

We have analyzed this rule under Commandant Instruction M16475.lD, which guides the Coast Guard in complying with the National Environmental Policy Act of 1969 (NEPA)(42 U.S.C. 4321–4370f), and have concluded that there are no factors in this case that would limit the use of a categorical exclusion under section 2.B.2 of the Instruction. Therefore, this rule is categorically excluded, under figure 2–1, paragraph (34)(g), of the Instruction, from further environmental documentation. Under figure 2–1, paragraph (34)(g), of the Instruction, an ''Environmental Analysis Check List'' and a ''Categorical Exclusion Determination'' are not required for this rule.

Indian Tribal Governments

This rule does not have tribal implications under Executive Order 13175, Consultation and Coordination with Indian Tribal Governments, because it does not have substantial direct effect on one or more Indian tribes, on the relationship between the Federal Government and Indian tribes, or on the distribution of power and responsibilities between the Federal Government and Indian tribes.

Energy Effects

We have analyzed this rule under Executive Order 13211, Actions Concerning regulations That Significantly Affect Energy Supply, Distribution, or Use. We have determined that it is not a ''significant energy action'' under that order because it is not a ''significant regulatory action'' under Executive Order 12866 and is not likely to have significant adverse effect on the supply, distribution, or use of energy. It has not been designated by the Administrator of the Office of Information and Regulatory Affairs as a significant energy action. Therefore, it does not require a Statement of Energy Effects under Executive Order 13211.

List of Subjects in 33 CFR Part 165

Harbors, Marine safety, Navigation (water), Reporting and recordkeeping requirements, Security measures, Waterways.

■ For the reasons discussed in the preamble, the Coast Guard amends 33 CFR part 165, as follows:

PART 165—REGULATED NAVIGATION AREAS AND LIMITED ACCESS AREAS

■ 1. The authority citation for part 165 continues to read as follows:

Authority: 33 U.S.C. 1226, 1231; 46 U.S.C. Chapter 701; 50 U.S.C. 191, 195; 33 CFR 1.05–1(g), 6.04–1, 6.04–6, and 160.5; Pub. L. 107–295, 116 Stat. 2064; Department of Homeland Security Delegation No. 0170.1.

■ 2. A new temporary § 165.T07–096 to read as follows:

§ 165.T07–096 Safety Zone Lake Eustis, Eustis, FL.

(a) *Regulated area.* The Coast Guard is establishing a temporary safety zone on Lake Eustis, Eustis, Florida. The safety zone includes all waters in a 500 yard radius from the barge at position 28° 85. 6768′ N, 081° 69.152′ W.

(b) *Regulations.* In accordance with the general regulations in § 165.23 of this part, anchoring, mooring or transiting in this zone is prohibited unless authorized by the Coast Guard Captain of the Port Jacksonville, Florida.

(c) *Dates.* This rule is effective from 8:30 p.m., August 6, 2004, until 9:30 p.m. on August 6, 2004.

Dated: July 16, 2004.

David. L. Lersch,

Captain, U. S. Coast Guard, Captain of the Port Jacksonville.

[FR Doc. 04–17268 Filed 7–28–04; 8:45 am]

BILLING CODE 4910–15–P

DEPARTMENT OF HOMELAND SECURITY

Coast Guard

33 CFR Part 165

[CGD09–04–095]

RIN 1625–AA87

Security Zone; Cleveland Harbor, Cleveland, OH

AGENCY: Coast Guard, DHS.

ACTION: Temporary final rule.

SUMMARY: The Coast Guard is establishing a temporary security zone for the 2004 International Children's Games—Festivities and Barbeque. The security zone is necessary to ensure the security of the people attending this event on July 29, 2004. The security zone will restrict vessels from the North Coast Harbor and portions of Cleveland Harbor.

DATES: This rule is effective from 9 a.m. (local) until 11 p.m. (local), Thursday, July 29, 2004.

ADDRESSES: Documents indicated in this preamble as being available in the docket, are part of docket [CGD09–04–095] and are available for inspection or copying at the U.S. Coast Guard Marine Safety Office Cleveland, 1055 East Ninth Street, Cleveland, Ohio 44114, between the hours of 7:30 a.m. and 3:30 p.m., Monday through Friday, except Federal Holidays.

FOR FURTHER INFORMATION CONTACT: LT Allen Turner, U.S. Coast Guard Marine Safety Office Cleveland, at (216) 937–0128.

SUPPLEMENTARY INFORMATION:

Regulatory Information

We did not publish a notice of proposed rulemaking (NPRM) for this regulation. Under 5 U.S.C. 553(b)(B), the Coast Guard finds that good cause exists for not publishing an NPRM. The permit application was not received in time to publish an NPRM followed by a final rule before the 2004 International Children's Games-Festivities and Barbeque takes place. Under 5 U.S.C. 553(d)(3), good cause exists for making this rule effective less than 30 days after publication in the **Federal Register**. Publication of a notice of proposed rulemaking and delay of effective date would be contrary to the public interest because immediate action is necessary to prevent possible loss of life, injury, or damage to property.

Background and Purpose

The following area is a security zone: All waters located within 300 feet of Voinovich Park and East 9th Street Pier, to include the entire Rock and Roll Inner Harbor.

Entry into, transit through, or anchoring within this security zone is prohibited unless authorized by the Captain of the *Port Cleveland* or his designated on-scene representative. The designated on-scene representative will be the Coast Guard Patrol Commander. The Coast Guard Patrol Commander may be contacted via VHF Channel 16.

Regulatory Evaluation

This rule is not a ''significant regulatory action'' under section 3(f) of Executive Order 12866 and does not require an assessment of potential costs and benefits under section 6(a)(3) of that Order. The Office of Management and Budget has not reviewed this rule under that Order. It is not significant under the regulatory policies and procedures of the Department of Homeland Security (DHS).

We expect the economic impact of this rule to be so minimal that a full Regulatory Evaluation under the regulatory policies and procedures of DHS is unnecessary. This determination is based on the limited time that the security zone will be in effect, and the extensive advance notice that will be made to the maritime community via Local Notice to Mariners, facsimile, and marine safety information broadcasts. This regulation is tailored to impose a minimal impact on maritime interests without compromising security.

Small Entities

Under the Regulatory Flexibility Act (5 U.S.C. 601–612), we have considered whether this rule would have a significant impact on a substantial number of small entities. The term ''small entities'' comprises small businesses, not-for-profit organizations that are independently owned and operated and are not dominant in their fields, and governmental jurisdictions with populations of less than 50,000.

The Coast Guard certifies under 5 U.S.C. 605(b) that this rule would not have a significant economic impact on a substantial number of small entities.

This rule would affect the following entities, some of which might be small entities: The owners or operators of recreational or commercial vessels intending to transit a portion of the activated security zone.

This security zone would not have a significant economic impact on a substantial number of small entities for the following reasons: The proposed zone is only in effect for the duration of the event. Before enforcing the security zone, the Coast Guard will issue maritime advisories available to users who may be impacted through notification in the **Federal Register**, Local Notice to Mariners, facsimile, and marine safety information broadcasts.

If you think that your business, organization, or governmental jurisdiction qualifies as a small entity and that this rule would have a significant economic impact on it, please submit a comment (*see* **ADDRESSES**) explaining why you think it qualifies and how and to what degree this rule would economically affect it.

Assistance for Small Entities

Under section 213(a) of the Small Business Regulatory Enforcement Fairness Act of 1996 (Public Law 104–121), we want to assist small entities in understanding this rule so that they can better evaluate its effects and participate in the rulemaking process. If the rule would affect your small business, organization, or governmental jurisdiction and you have questions concerning its provisions or options for compliance, please contact Marine Safety Office Cleveland (*see* **ADDRESSES**).

Small businesses may send comments on the actions of Federal employees who enforce, or otherwise determine compliance with, Federal regulations to the Small Business and Agriculture Regulatory Enforcement Ombudsman and the Regional Small Business Regulatory Fairness Boards. The Ombudsman evaluates these actions

annually and rates each agency's responsiveness to small business. If you wish to comment on actions by employees of the Coast Guard, call 1–888–REG–FAIR (1–888–734–3247).

Collection of Information

This rule would call for no new collection of information under the Paperwork Reduction Act of 1995 (44 U.S.C. 3501–3520).

Federalism

A rule has implications for federalism under Executive Order 13132, Federalism, if it has a substantial direct effect on State or local governments and would either preempt State law or impose a substantial direct cost of compliance on them. We have analyzed this rule under that Order and have determined that it does not have implications for federalism.

Unfunded Mandates Reform Act

The Unfunded Mandates Reform Act of 1995 (2 U.S.C. 1531–1538) requires Federal agencies to assess the effects of their discretionary regulatory actions. In particular, the Act addresses actions that may result in the expenditure by a State, local, or tribal government, in the aggregate, or by the private sector of $100,000,000 or more in any one year. Though this proposed rule would not result in such an expenditure, we do discuss the effects of this rule elsewhere in this preamble.

Taking of Private Property

This rule would not affect a taking of private property or otherwise have taking implications under Executive Order 12630, Governmental Actions and Interference with Constitutionally Protected Property Rights.

Civil Justice Reform

This rule meets applicable standards in sections 3(a) and 3(b) (2) of Executive Order 12988, Civil Justice Reform, to minimize litigation, eliminate ambiguity, and reduce burden.

Protection of Children

We have analyzed this rule under Executive Order 13045, Protection of Children from Environmental Health Risks and Safety Risks. This rule is not an economically significant rule and does not concern an environmental risk to health or risk to safety that may disproportionately affect children.

Indian Tribal Governments

This rule does not have tribal implications under Executive Order 13175, Consultation and Coordination with Indian Tribal Governments, because it would not have a substantial direct effect on one or more Indian tribes, on the relationship between the Federal Government and Indian tribes, or on the distribution of power and responsibilities between the Federal Government and Indian tribes.

Energy Effects

We have analyzed this rule under Executive Order 13211, Actions Concerning Regulations That Significantly Affect Energy Supply, Distribution, or Use. The Coast Guard has determined that it is not a ''significant energy action'' under that order because it is not a ''significant regulatory action'' under Executive Order 12866 and is not likely to have a significant adverse effect on the supply, distribution, or use of energy. The administrator of the Office of Information and Regulatory Affairs has not designated it as a significant energy action. Therefore, it does not require a Statement of Energy Effects under Executive Order 13211.

Technical Standards

The National Technology Transfer and Advancement Act (NTTAA) (15 U.S.C. 272 note) directs agencies to use voluntary consensus standards in their regulatory activities unless the agency provides Congress, through the Office of Management and Budget, with an explanation of why using these standards would be inconsistent with applicable law or otherwise impractical. Voluntary consensus standards are technical standards (*e.g.*, specifications of materials, performance, design, or operation; test methods; sampling procedures; and related management systems practices) that are developed or adopted by voluntary consensus standards bodies.

This rule does not use technical standards. Therefore, we did not consider the use of voluntary consensus standards.

Environment

We have analyzed this rule under Commandant Instruction M16475.lD, which guides the Coast Guard in complying with the National Environmental Policy Act of 1969 (NEPA) (42 U.S.C. 4321–4370f), and have concluded that there are no factors in this case that would limit the use of a categorical exclusion under section 2.B.2 of the Instruction. Therefore, this rule is categorically excluded, under figure 2–1, paragraph (34)(g), of the Instruction, from further environmental documentation. This rule fits the category from paragraph (34)(g) because it establishes a security zone. Under figure 2–1, paragraph (34)(g), of the Instruction, an ''Environmental Analysis Check List'' and a ''Categorical Exclusion Determination'' are not required for this rule.

List of Subjects in 33 CFR Part 165

Harbors, Marine safety, Navigation (water), Reporting and recordkeeping requirements, Waterways.

■ For the reasons discussed in the preamble, the Coast Guard amends 33 CFR part 165 as follows:

PART 165—REGULATED NAVIGATION AREAS AND LIMITED ACCESS AREAS

■ 1. The authority citation for part 165 continues to read as follows:

Authority: 33 U.S.C. 1226, 1231; 46 U.S.C. Chapter 701; 50 U.S.C. 191, 195; 33 CFR 1.05–1(g), 6.04–1, 6.04–6, and 160.5; Pub. L. 107–295, 116 Stat. 2064; Department of Homeland Security Delegation No. 0170.1.

■ 2. Add § 165.T09–095 to read as follows:

§ 165.T09–095 Security Zone; 2004 International Children's Games-Festivities and Barbeque, Cleveland, OH.

(a) *Location.* The following area is a security zone: All waters located within 300 feet of Voinovich Park and East 9th Street Pier, to include the entire Rock and Roll Inner Harbor.

(b) *Effective period.* This section is effective from 9 a.m. (local) until 11 p.m. (local) on Thursday, July 29, 2004.

(c) *Regulations.* Entry into, transit through, or anchoring within this security zone is prohibited unless authorized by the Captain of the Port Cleveland or his designated on-scene representative. The designated on-scene representative will be the Coast Guard Patrol Commander. The Coast Guard Patrol Commander may be contacted via VHF Channel 16.

Dated: July 20, 2004.

Lorne W. Thomas,

Commander, U.S. Coast Guard, Captain of the Port Cleveland.

[FR Doc. 04–17323 Filed 7–28–04; 8:45 am]

BILLING CODE 4910–15–P

DEPARTMENT OF DEFENSE

Department of the Army; Corps of Engineers

33 CFR Part 334

United States Coast Guard Restricted Area, Coast Guard Base Mobile, AL

AGENCY: U.S. Army Corps of Engineers, DoD.

ACTION: Final rule.

SUMMARY: The U.S. Army Corps of Engineers is amending its regulations to establish a Restricted Area in the waters of Arlington Channel surrounding the U.S. Coast Guard Base Mobile Docks at Mobile, Alabama. The designation would ensure public safety and satisfy the security, safety, and operational requirements as they pertain to vessels at Coast Guard Base Mobile, by establishing an area into which unauthorized vessels and persons may not enter.

DATES: Effective August 30, 2004.

ADDRESSES: U.S. Army Corps of Engineers, ATTN: CECW–OR, 441 G Street, NW., Washington, DC 20314–1000.

FOR FURTHER INFORMATION CONTACT: Ms. Joanne M. Barry, Headquarters Regulatory Branch at (202) 761–7763 or Mr. John B. McFadyen, Corps Mobile District, at (251) 690–3261.

SUPPLEMENTARY INFORMATION: Pursuant to its authorities in Section 7 of the Rivers and Harbors Act of 1917 (40 Stat. 266; 33 U.S.C. 1) and Chapter XIX of the Army Appropriation Act of 1919 (40 Stat.892; 33 U.S.C. 3) the Corps is amending the Restricted Area regulations in 33 CFR Part 334 by establishing a new Restricted Area at 334.783, in the waters of Arlington Channel surrounding U.S. Coast Guard Base Mobile at Mobile, Alabama. The points defining the proposed restricted area were selected to minimize interference with other users of Arlington Channel, and to minimize the restricted area's interference with commercial and recreational fisheries. In addition to the publication of the proposed rule, the Mobile District Engineer published public notices dated 18 July 2003 and 20 April 2004. No objections to establishment of the final Restricted Area were received.

Procedural Requirements

A. Review Under Executive Order 12866

This rule is issued with respect to security and safety functions of the U.S. Coast Guard and the provisions of Executive Order 12866 do not apply.

B. Review Under the Regulatory Flexibility Act

This rule has been reviewed under the Regulatory Flexibility Act (Pub. L. 96–354), which requires the preparation of a regulatory flexibility analysis for any regulation that will have a significant economic impact on a substantial number of small entities (*i.e.*, small businesses and small governments). The Corps expects that the economic impact of the establishment of this Restricted Area would have no impact on the public, no anticipated navigational hazard or interference with existing waterway traffic, and accordingly, certifies that this proposal, if adopted, will have no significant economic impact on small entities.

C. Review Under the National Environmental Policy Act

The Mobile District has prepared an Environmental Assessment (EA) for this action. We have concluded that this action will not have a significant impact on the human environment, and preparation of an Environmental Impact Statement (EIS) is not required. The EA will be available for review at the Mobile District office listed at the end of the **FOR FURTHER INFORMATION CONTACT** paragraph above.

D. Unfunded Mandates Act

This rule does not impose an enforceable duty among the private sector and, therefore, is not a Federal private sector mandate and is not subject to the requirements of Section 202 or 205 of the Unfunded Mandates Act. We have also found under Section 203 of the Act that small governments will not be significantly and uniquely affected by this rulemaking.

E. Submission to Congress and the General Accounting Office

Pursuant to Section 801(a)(1)(A) of the Administrative Procedure Act, as amended by the Small Business Regulatory Enforcement Fairness Act of 1996, the Army has submitted a report containing this rule to the U.S. Senate, the U.S. House of Representatives, and the Comptroller General of the General Accounting Office. This rule is not a major rule within the meaning of Section 804(2) of the Administrative Procedure Act, as amended.

List of Subjects in 33 CFR Part 334

Danger zones, Marine safety, Navigation (water), Restricted areas, Waterways.

■ For the reasons set out in the preamble, we are amending 33 CFR Part 334 to read as follows:

PART 334—DANGER ZONE AND RESTRICTED AREA REGULATIONS

■ 1. The authority citation for Part 334 continues to read as follows:

Authority: 40 Stat. 266; (33 U.S.C. 1) and 40 Stat. 892; (33 U.S.C. 3).

■ 2. Section 334.783 is added to read as follows:

§ 334.783 Arlington Channel, U.S. Coast Guard Base Mobile, Mobile, Alabama, Coast Guard Restricted Area.

(a) *The area.* The waters of Arlington Channel west of a line from latitude 30°–39′—09″N, longitude 088°–03′–24″ W to latitude 30°–38′–54°° N., longitude 088′–03°–17″ W.

(b) *The regulations.* The restricted area is open to U.S. Government vessels and transiting vessels only. U.S. Government vessels include U.S. Coast Guard vessels, Department of Defense vessels, state and local law enforcement and emergency services vessels and vessels under contract with the U.S. Government. Vessels transiting the restricted area shall proceed across the area by the most direct route and without unnecessary delay. Fishing, trawling, net-fishing and other aquatic activities are prohibited in the restricted area without prior approval from the Commanding Officer, U.S. Coast Guard Group Mobile or his designated representative.

(c) *Enforcement.* The regulations in this section shall be enforced by the Commanding Officer, U.S. Coast Guard Group Mobile or his designated representative.

Dated: July 21, 2004.

Michael B. White,

Chief, Operations Division, Directorate of Civil Works.

[FR Doc. 04–17263 Filed 7–28–04; 8:45 am]

BILLING CODE 3710–92–P

POSTAL SERVICE

39 CFR Part 111

Merged Five-Digit and Five-Digit Scheme Pallets for Periodicals, Standard Mail, and Package Services Mail

AGENCY: Postal Service.

ACTION: Final rule.

SUMMARY: This final rule amends mailing standards in the *Domestic Mail Manual* (DMM™) to allow mailers to merge (place together) on the same 5-digit scheme pallet (using labeling list DMM L001) or same 5-digit pallet both carrier route bundles of flat-size or irregular parcel mailpieces and noncarrier route 5-digit bundles of flat-size mailpieces not meeting the criteria for the automated flat sorting machine (AFSM) 100, as well as noncarrier route 5-digit bundles of irregular parcel mailpieces.

Prior to this amendment, mailing standards for palletizing mail under DMM M045 permitted mailers to merge carrier route bundles and noncarrier

route 5-digit bundles of flat-size pieces only, and only on 5-digit metro pallets, 3-digit pallets, sectional center facility (SCF) pallets, area distribution center (ADC) pallets (for Periodicals mail only), auxiliary service facility (ASF) pallets (for Standard Mail® and Package Services pieces only), and bulk mail center (BMC) pallets (for Standard Mail and Package Services pieces only).

DATES: *Effective date:* September 2, 2004. *Compliance date:* Mailings presented for verification and acceptance after 12:01 a.m. on Thursday, January 6, 2005, must comply with this rule.

FOR FURTHER INFORMATION CONTACT: Neil Berger, Mailing Standards, at (202) 268–7267; or Thomas L. DeVaughan, Operational Requirements, at (202) 268–7643.

SUPPLEMENTARY INFORMATION: Before the effective date of this final rule, pallet preparation standards in DMM M045.3.0 prohibited mailers from merging (placing together) carrier route bundles and noncarrier route 5-digit bundles of flat-size pieces on the same 5-digit scheme pallet or on the same 5-digit pallet until the ''5-digit metro'' pallet level had been reached. Mailers wanting to perform such mergers at a finer pallet level previously had to use the preparation options in DMM M900. Those optional standards, however, are limited to flat-size mail only, and were generally developed for application with flat-size mailpieces compatible with the automated flat sorting machine 100 (AFSM 100). These optional standards will continue to be available for mailer use.

The previous prohibition on merged 5-digit scheme and merged 5-digit pallets under M045.3.0 also applied to bundles of all flats, including upgraded flat sorting machine (UFSM) 1000-compatible automation flats and irregular parcels (generally flat-shaped pieces exceeding the maximum dimensions for flats). The operational need for this prohibition, however, is relevant only to flat-size pieces compatible with the AFSM 100. DMM criteria for AFSM 100-compatible flats (DMM C820.2.0) can be viewed using Postal Explorer® at *http://pe.usps.gov*.

Five-digit bundles of non-AFSM 100-compatible flat-size pieces (that is, flats meeting the physical criteria of the UFSM 1000 under DMM C820.3.0) are further sorted to carrier routes at the delivery unit, where the carriers prepare mail for delivery, rather than the mail processing facility, where employees handle and stage the palletized mail before its transport to the delivery unit. As a consequence, it is more practical to have the 5-digit bundles of UFSM 1000-compatible flats merged on the same 5-digit or 5-digit scheme pallets with the corresponding carrier route bundles so that both the carrier route mail and the noncarrier route mail can be cross-docked to the delivery unit at the mail processing facility.

The addition of these merged pallet sort levels to the existing pallet sort levels should increase operational efficiencies by reducing the total number of pallets that must be prepared. These additional pallet levels should also improve customer service by transporting more mail closer to the point of delivery. Unlike the limitations in DMM M920, M930, and M940, preparation of merged 5-digit scheme and merged 5-digit pallets under revised M045.3.0 is accomplished without limitations (that is, without the use of the ''A'' and ''C'' or the ''B'' and ''D'' indicators in the City State Product, along with a 5 percent threshold for 5-digit noncarrier route bundles).

Besides adding the new merged pallet levels in DMM M045, this final rule:

- Standardizes the presentation and language of mailing standards used for pallet preparation and labeling in DMM E230, L001, L802, M011, M041.5.0, and M045.3.0, including the standards for Package Services irregular parcels and for Standard Mail and Package Services machinable parcels.
- Clarifies the rate eligibility for Periodicals irregular parcels in DMM E220 and for Standard Mail irregular parcels in DMM E620.
- Clarifies the availability of DMM M045.3.0 for palletizing flat-size mailpieces cobundled under DMM M950.
- Replaces the term ''package'' with ''bundle'' when referring to multiple pieces prepared as a single unit to a presort destination. This change was announced in *Postal Bulletin* 22132 (7–8–04, page 35).

Comments

Background

On April 26, 2004, the Postal Service published a proposed rule in the **Federal Register** (69 FR 22464–22470) that amended mailing standards in the *Domestic Mail Manual* (DMM) by adding merged 5-digit scheme (DMM L001) and merged 5-digit pallet sort levels to the sequence of sort levels already available in DMM M045.3.0 for Periodicals, Standard Mail, and Bound Printed Matter pieces.

The Postal Service received comments on the proposed rule from five different parties, all involved in some aspect of mail preparation: two national mailers, two printers and mail service providers, and one software developer. The Postal Service appreciates the time, effort, and thought taken by these parties in preparing the comments. The comments have each been identified and, when possible, grouped together under the same heading. The Postal Service has carefully reviewed these comments and has provided responses below.

Compliance Date

Comment. All five parties approved the proposed rule, with three expressly citing the benefits that both the mailing industry and the Postal Service would gain from the implementation of this rule. One commenter stated that the implementation of this rule would improve mail preparation and mail entry, increase operational and distribution efficiencies, and enhance service for the mailing industry and the Postal Service. Another commenter believed that the major change from the implementation of this rule would be the placement of mail on 5-digit pallets, increasing productivity for the mailing industry and the Postal Service. Another commenter noted that the implementation of this rule would allow better utilization of mailers' equipment and, equally important, that it would reduce the number of times that certain 5-digit palletized mail is handled, decreasing potential damage to the mail before delivery to customers.

On account of the benefits that the mailing industry and the Postal Service would derive from this rule, one commenter specifically requested immediate implementation of the rule. Another commenter, however, believed that an implementation date in January 2005 would be more appropriate than an immediate implementation date, given the number of changes in the rule and the additional complexities associated with those changes. The same commenter also noted that many vendors and developers supplying presort software used by mailers would be shipping releases early this summer in support of the August 1 implementation of the new minimum volume requirements for 5-digit scheme and (individual) 5-digit bundles for Standard Mail flat-size pieces. The final requirements were first published on April 1 in the **Federal Register**. *See* 69 FR 17059–17063.

Response. In view of the many operational efficiencies and improved service that mailers would gain from the change to current pallet preparation standards in DMM M045.3.0, yet still mindful of the complications posed by immediate implementation, the Postal Service has determined to make this

rule optional at first, with an effective date of September 2, 2004, and then mandatory, with an effective date of January 6, 2005 (both dates coinciding with monthly online updates of the electronic DMM). The mandatory compliance date of January 6, 2005, should give mailers and software developers sufficient time to prepare for this change and make appropriate adjustments to their internal mailing operations.

The use of an advance (optional) effective date before the mandatory compliance date complicates the online presentation and the continued availability of the existing mailing standards for palletized mail. Beginning on September 2, 2004, mailers may use either the existing standards or the new standards for palletizing mail. Beginning on January 6, 2005, the new standards must be used exclusively. The new standards are designated as DMM M045.3.0 as presented in this final rule. The existing standards are placed at the end of DMM M045 and redesignated as new DMM M045.15.0. This placement simplifies their elimination when the new standards become mandatory on January 6, 2005.

Abbreviation of ''Scheme'' on Pallet Labels

Comment. One commenter requested that the mailing standards for labeling scheme pallets consistently permit the optional use of the abbreviation ''SCH'' for ''SCHEME'' for all applicable sort levels. In the proposed rule, for example, DMM M045.3.1a permits only ''SCHEME'' on pallet labels for merged 5-digit scheme pallets, whereas DMM M045.3.1b permits either ''SCHEME'' or the abbreviation ''SCH'' for pallet labels for 5-digit scheme carrier routes pallets.

Response. The Postal Service agrees with the commenter's request and has corrected this oversight in the final rule. The pallet labeling instructions now consistently permit the optional alternative abbreviation ''SCH'' for ''SCHEME'' at all sort levels.

Carrier Route AFSM 100-Compatible Flats on Merged Pallets

Comment. One commenter questioned whether carrier route bundles of flat-size mailpieces meeting the criteria for the automated flat sorting machine (AFSM) 100 under DMM C820.2.0 are permitted on merged 5-digit scheme and merged 5-digit pallets. The commenter noted that noncarrier route pieces (in 5-digit bundles) meeting the criteria in DMM C820.2.0 are not permitted. The same commenter reasoned that if bundles of both AFSM 100-compatible carrier route pieces and UFSM 1000-compatible flat-size pieces were permitted, and no noncarrier route pieces were on the same pallet, the pallet would be essentially no different from a 5-digit scheme carrier routes pallet.

The commenter noted that wording in the proposed rule for this sort level stipulated that bundles containing noncarrier route AFSM 100-compatible flats under C820.2.0 are not permitted on the merged 5-digit scheme and merged 5-digit pallets. By contrast, bundles of carrier route AFSM 100-compatible flats and bundles of carrier route UFSM 1000-compatible flats are both permitted on the same merged pallet.

Response. The Postal Service acknowledges that the commenter is correct in questioning how a pallet with only carrier route mail could be designated as a merged pallet. By its very definition, a merged pallet must contain not only carrier route mail but also noncarrier route mail (presorted rate mail and/or automation rate mail). The proposed rule presented the correct definitions of merged pallets in various sections in revised DMM M011.1.2 and M011.1.3, but failed to carry those definitions forward to the proposed pallet preparation standards in DMM M045.3.0 for merged 5-digit scheme (DMM L001) and merged 5-digit pallets. The final rule corrects the wording throughout DMM M045.3.0 by requiring the placement of either presorted rate or automation rate mail or both on the same pallet with the carrier route mail.

UFSM 1000 Flats on Pallets Under DMM M930 and M940

Comment. One commenter requested clarification whether mailers preparing mailings of UFSM 1000-compatible flats could still palletize those mailings under DMM M930 and M940.

Response. The Postal Service assures mailers that they may continue using the preparation options in DMM M930 and M940 for palletizing UFSM 1000-compatible flats. For many mailers, however, the revisions to M045.3.0 simplify preparation of UFSM 1000-compatible flats on pallets and, with the new merged sort levels, provide operational efficiencies for pallet preparation without the complexity and limitations of the preparation options in M900.

Irregular Parcel Rate Eligibility

Comment. One commenter noted that irregular parcels as defined in DMM C050.4.0 qualify only for basic rates under the eligibility standards for Periodicals rates in DMM E220.2.0 and only for basic rates under the eligibility standards for Standard Mail rates in DMM E620.2.0.

The commenter believed that irregular parcels prepared in 5-digit and 3-digit bundles and placed in or on the appropriate containers, including pallets, should be eligible for the corresponding rates for Periodicals mail (either 5-digit or 3-digit rate) and for Standard Mail (3/5 rate) service.

Response. The Postal Service believes that pallet preparation standards and rate eligibility standards should represent clearly and reflect accurately the relationship between the two. The following explanation for both Periodicals rates and Standard Mail rates for palletized bundles reconciles and clarifies this relationship.

Periodicals Rates

The Periodicals rate structure recognizes nonautomation rates and automation rates. Automation rates are further divided into two separate rate categories: one for letter-size mail meeting the physical characteristics in DMM C810, and one for flat-size mail meeting the physical characteristics in DMM C820. Similar to First-Class Mail Presorted rates, Periodicals nonautomation piece rates make no rate distinction by processing category.

The wording for presorted rate eligibility standards has therefore been revised to reflect the actual intent of the rate structure as presented in the Domestic Mail Classification Schedule, which classifies Periodicals rate categories as nonautomation, automation letter, and automation flat.

For purposes of mail preparation, the revised wording in DMM E220.2.0 distinguishes between letter-size mail and nonletter-size mail (which includes flat-size mailpieces and irregular parcel mailpieces). As a result, this final rule aligns the revised rate eligibility standards for irregular parcels with the pallet preparation standards for irregular parcels. Neither the proposed rule nor this final rule changes the Periodicals rate eligibility standards in effect since January 10, 1999.

Standard Mail Rates

The Standard Mail rate structure recognizes presorted rates (nonautomation rates) and automation rates. Both rate categories are further divided into two separate categories for pieces weighing 3.3 ounces or less: one for letter-size mail meeting the physical characteristics in DMM C050.2.0 and, for automation rates, DMM C810; and one for nonletter-size mail meeting the physical characteristics in DMM C050.3.0 for flats, DMM C050.4.0 for machinable parcels, DMM C050.5.0 for

irregular parcels, and DMM C820 for automation rate flats. The actual preparation standards, however, impose specific requirements based on mail processing categories. For example, the preparation of letter-size mail is quite different from the preparation of flat-size mail, machinable parcels, or irregular parcels.

Irregular parcels (see DMM C050.5.0), in particular, are best described as ''none of the above'' when reviewing the dimensional standards in DMM C050 for letter-size mail and flat-size mail, and the dimensional standards and relative uniform shape of machinable parcels. Only in rare occurrences, such as a publication or catalog exceeding the maximum 15-inch length or maximum 12-inch height permitted for flat-size mailpieces and thus categorizing it as an irregular parcel, would bundles of irregular parcels be uniform in thickness and suitable for placement directly onto pallets without compromising the integrity or stability of the pallets.

Before this final rule, all irregular parcels eligible for the 3/5 rate were required to be sacked (whether first bundled or not), including irregular parcels to be placed onto pallets. Five-digit scheme (L606) groups, 5-digit groups, and 3-digit groups of irregular parcels placed directly into sacks before placement on pallets compensate for parcels not even in shape or uniform in thickness, such as padded bags containing film or cylindrical medicine bottles, or parcels not easily stackable, such as rolls or mailing tubes. Requiring sacking of such irregular parcels stabilizes the pallets and prevents individual presort destination bundles from breaking apart, thus assuring the maintenance of the required separations for the rates being claimed.

Other points about Standard Mail irregular parcels that can affect the placement of presort destination bundles directly onto pallets include preparation of 5-digit scheme (DMM L001) pallets and exceptions to required bundling (DMM M610.5.3). The 5-digit scheme under DMM L606 may be used only for sacking machinable and irregular parcels (usually consisting of merchandise), or placing sacks (containing parcels) onto pallets, or for placing machinable parcels directly onto a pallet. The L606 5-digit scheme was not developed for preparing presort destination bundles (mailpieces consisting of publications, catalogs, etc.). In the final rule, the 5-digit scheme preparation for flats and irregular parcels, which is under DMM L001, applies to pallets as the containers.

The standards in DMM M610.5.3 that permit sorting irregular parcels directly into sacks without first preparing presort destination bundles apply to nearly all Standard Mail irregular parcel mailings except for those infrequent mailings containing ''oversized flats'' and irregular parcels that are less than ½ inch thick. Here 5-digit and 3-digit pieces can qualify for the 3/5 rate as sacked pieces.

The eligibility standards for Standard Mail 3/5 rate application have remained unchanged for the past 10 years. The mailing standards for pallet preparation, however, have been revised in the past 10 years in nearly every issue of the DMM, most substantially in DMM Issue 56 (effective January 7, 2001). With the evolution of those standards, the direct placement of bundles of flat-size pieces and bundles of irregular parcels onto pallets was permitted, even though the eligibility for 3/5 rates had not been extended to Standard Mail irregular parcels not first prepared in sacks.

In view of the possibility that a Standard Mail irregular parcel could consist of a catalog or printed publication (similar to a Periodicals publication) of flat, uniform thickness and prepared in stable presort destination bundles suitable for nesting directly onto pallets, the Postal Service amends the rate eligibility standards for such irregular parcels (oversized flats) in DMM E620.2.0.

For purposes of mail preparation, the revised wording in DMM E620.2.0 distinguishes between irregular parcels that are of uniform thickness (that is, printed publications or catalogs that can be prepared in presort destination bundles under DMM M020), placed directly onto pallets, and those that are not. As a result, this final rule aligns the revised rate eligibility standards for irregular parcels with the pallet preparation standards for irregular parcels.

Mailers are reminded that Standard Mail irregular parcels of uniform thickness prepared in presort destination bundles are still subject to the residual shape surcharge in addition to the applicable Standard Mail nonletter rates (see DMM E620.3.0).

Nonautomation Flats on Five-Digit ZIP Code Pallet

Comment. One commenter recommended that the final rule allow all nonautomation rate Periodicals flats for the same 5-digit ZIP Code™ to be placed on the same 5-digit pallet, regardless of the presort level of each piece. That commenter believed making this change would improve delivery service for such mail.

Response. The Postal Service believes that the addition of merged pallets to DMM M045.3.0 should, in certain cases, improve delivery service for Periodicals mail. Under the final rule for placing Periodicals rate mail on merged 5-digit scheme (DMM L001) and merged 5-digit pallets for example, the pallets must contain carrier route bundles, and the same pallets must also contain automation rate and/or presorted rate bundles for the same 5-digit ZIP Code. The merged pallet levels do not permit noncarrier route 5-digit bundles containing AFSM 100-compatible flats under DMM C820.2.0.

If the commenter intended ''regardless of the presort level of each piece'' to mean both pieces in carrier route bundles, and pieces in noncarrier route 5-digit bundles on the same pallet, this merged 5-digit pallet level should alleviate the delivery issue mentioned by the commenter, as long as the pieces in the noncarrier route 5-digit bundles are UFSM 1000-compatible pieces under DMM C820.3.0.

Mailers are reminded that merged 5-digit scheme and merged 5-digit pallets are for bundles only. Sacked mail is not permitted on these merged pallets. Moreover, these pallets must also contain a minimum load of 250 pounds of mail.

Low-Volume Periodicals Bundles

Comment. One commenter recommended that the final rule clarify whether the new merged pallet levels for Periodicals mail would permit placement of low-volume 5-digit bundles on 5-digit or 5-digit scheme pallets. The commenter pointed out that permitting low-volume 5-digit bundles of UFSM-compatible 1000 flats on merged pallets would give mailers the ability to place all mail for a given 5-digit or 5-digit scheme on a single pallet, which can be cross-docked to the delivery unit.

Response. The Postal Service agrees with this recommendation and has added wording to the appropriate sections in the DMM to allow low-volume 5-digit bundles of Periodicals on merged 5-digit scheme (DMM L001) and merged 5-digit pallets. This revision to the final rule thus aligns the preparation standards in DMM M045 with those for palletizing low-volume 5-digit bundles found in other sections of the DMM.

Extension of Merging to Sacked Mail

Comment. One commenter noted that even though the proposed rule would help move UFSM 1000-compatible flats from lower pallet sort levels such as 3-digit and sectional center facility (SCF) to higher sort levels such as merged 5-digit scheme and merged 5-digit pallets,

the rule would not improve the situation for flats prepared in sacks.

The commenter recommended that current mailing standards should be revised to allow 5-digit bundles of UFSM 1000-compatible flats to be placed in merged 5-digit scheme and merged 5-digit sacks regardless of the Address Management System (AMS) City/State indicator. In addition, the allowance for low-volume 5-digit bundles of Periodicals flats should be extended to merged sacks of non-AFSM 100 flats.

Response. The Postal Service notes that current standards in DMM M920 do permit merged sacks using the City State Product. Allowing merged sacks without the use of this product would require some modification of existing documentation standards, but it could provide simpler preparation for Periodicals mailings that do not warrant preparation on pallets.

The Postal Service believes, nevertheless, that this recommendation has merit for non-AFSM 100 Periodicals flats, especially from the perspective of production and operational efficiencies. Allowing the merger of flats in sacks could build density at the 5-digit level, and it could possibly eliminate a large number of low-volume sacks that many publishers currently prepare.

For publishers who enter their publications at destination delivery units (DDUs), merged sacks could possibly improve delivery service. Even so, mailing standards would require clarification on how to claim DDU rates for the bundles of carrier route mail and the destination sectional center facility (DSCF) rate for the noncarrier route 5-digit bundles. Many other mailing standards would also be affected by this recommended change. As a consequence, the Postal Service believes that this recommendation and the associated modifications to mailing standards warrant further study and comment from the mailing industry and therefore would not be appropriate to incorporate in this final rule.

PAVE Certification

Comment. One commenter asked whether Presort Accuracy Validation and Evaluation (PAVE) certification of presort software would be required for merging non-AFSM 100-compatible automation mail and/or presorted rate mail with carrier route mail on the same pallet. The commenter believed that the Postal Service should offer PAVE certification testing for software developers wishing to update their range of certified products for competitive reasons but that the Postal Service should not require PAVE-certified software for the revisions to DMM M045.3.0.

Response. The Postal Service agrees with the commenter and plans to offer tests for PAVE certification as an option but will not require the use of PAVE-certified software with the palletization standards in revised DMM M045.3.0.

List of Subjects in 39 CFR Part 111

Postal Service.

PART 111—[AMENDED]

■ 1. The authority citation for 39 CFR part 111 continues to read as follows:

Authority: 5 U.S.C. 552(a); 39 U.S.C. 101, 401, 403, 404, 414, 416, 3001–3011, 3201–3219, 3403–3406, 3621, 3626, 5001.

■ 2. Amend the following sections of the Domestic Mail Manual as set forth below:

Domestic Mail Manual (DMM)

* * * * *

E Eligibility

* * * * *

E200 Periodicals

* * * * *

E220 Presorted Rates

* * * * *

2.0 RATES

2.1 5-Digit Rates

Subject to M045, M210, or M900, 5-digit rates apply to:

* * * * *

[*Revise 2.1b to read as follows:*]

b. Nonletter-size pieces in 5-digit scheme (L007) bundles and 5-digit bundles of six or more addressed pieces each, placed in applicable merged 5-digit scheme (L001) sacks, merged 5-digit sacks, 5-digit scheme (L001) sacks, or 5-digit sacks, or palletized under M045, M920, M930, or M940.

2.2 3-Digit Rates

Subject to M045, M210, or M900, 3-digit rates apply to:

* * * * *

[*Revise 2.2b to read as follows:*]

b. Nonletter-size pieces in 5-digit scheme (L007) bundles, 5-digit bundles, and 3-digit bundles of six or more addressed pieces each, placed in 3-digit sacks; or 3-digit bundles of six or more addressed pieces each, placed onto 3-digit or lower pallets under M045, M920, M930, or M940.

* * * * *

E230 Carrier Route Rates

* * * * *

[*Revise heading of 2.0 to read as follows:*]

2.0 RATES

[*Revise heading and text of 2.1 to read as follows:*]

2.1 Preparation

Preparation to qualify eligible pieces for carrier route rates is optional and need not be performed for all carrier routes in a 5-digit area. Carrier route rates apply to copies that are prepared in carrier route bundles of six or more addressed pieces each subject to these standards:

a. *Letter-size mailings.* Carrier route rates apply to carrier route bundles that are sorted into carrier route, 5-digit carrier routes, or 3-digit carrier routes trays under M220. Trays may be palletized under M045.

b. *Nonletter-size mailings.* Carrier route rates apply to carrier route bundles that are sorted onto pallets prepared under M045, M920, M930, or M940, as appropriate, or prepared in carrier route, 5-digit scheme (L001) carrier routes, or 5-digit carrier routes sacks under M220. Sacks may be palletized under M045.

* * * * *

E600 Standard Mail

* * * * *

E620 Presorted Rates

* * * * *

2.0 RATES

* * * * *

2.3 3/5 Rates

* * * * *

[*Revise 2.3d, redesignate current 2.3e as new 2.3f, and add new 2.3e to read as follows:*]

d. For irregular parcels (see C050.5.0) of uniform thickness and more than 15 inches long or more than 12 inches high in a 5-digit bundle of 10 or more pieces, or in a 3-digit bundle of 10 or more pieces, palletized under M045.

e. For all other irregular parcels (see C050.5.0) in a 5-digit scheme (L606), 5-digit, or 3-digit sack containing at least 125 parcels or 15 pounds of parcels. (The 3/5 rates are available only when all possible 5-digit scheme and 5-digit sacks are prepared.)

* * * * *

L Labeling Lists

L000 General Use

[*Revise heading of L001 to read as follows:*]

L001 5-Digit Scheme—Periodicals, Standard Mail, and Package Services Flats and Irregular Parcels

[*Revise introductory text to read as follows:*]

L001 describes the 5-digit scheme sort list for pallets and sacks of Periodicals, Standard Mail, and Package Services flats and irregular parcels destined for multiple 5-digit ZIP Codes served by a single delivery unit. When the 5-digit scheme sort is used, mail for the 5-digit ZIP Codes shown in Column A must be combined on pallets or in sacks as follows:

* * * * *

L800 Automation Rate Mailings

* * * * *

[*Revise heading of L802 to read as follows:*]

L802 BMC/ASF Entry—Periodicals and Standard Mail letters, Flats and Irregular Parcels, and Package Services Flats and Irregular Parcels Mail

Summary

[*Revise text to read as follows:*]

L802 lists the 3-digit ZIP Code prefix for labeling mixed automation rate and nonautomation rate Periodicals, Standard Mail, and Package Services mailings entered at an ASF or BMC.

* * * * *

M Mail Preparation and Sortation

M000 General Preparation Standards

M010 Mailpieces

M011 Basic Standards

1.0 TERMS AND CONDITIONS

* * * * *

1.2 Presort Levels

Terms used for presort levels are defined as follows:

* * * * *

[*Revise 1.2f, 1.2g, 1.2j, 1.2l, and 1.2m, to read as follows:*]

f. *5-digit scheme carrier routes (pallets and sacks) for Periodicals flats and irregular parcels, Standard Mail flats, Bound Printed Matter flats (sacks only); and Bound Printed Matter irregular parcels (pallets only):* the ZIP Code in the delivery address on all pieces in carrier route bundles is one of the 5-digit ZIP Codes processed by the USPS as a single scheme, as shown in L001.

g. *5-digit scheme (pallets) for Periodicals flats and irregular parcels and Bound Printed Matter flats and irregular parcels:* the ZIP Code in the delivery address on all pieces is one of the 5-digit ZIP Codes processed by the USPS as a single scheme, as shown in L001.

* * * * *

j. *Merged 5-digit pallet:* contains carrier route bundles and noncarrier route 5-digit bundles (automation rate 5-digit bundles and/or presorted rate 5-digit bundles).

* * * * *

l. *Merged 5-digit scheme pallet:* contains carrier route bundles and noncarrier route 5-digit bundles (automation rate 5-digit bundles and/or presorted rate 5-digit bundles) for those 5-digit ZIP Codes that are part of a single scheme as shown in L001.

m. *5-digit metro pallets for Periodicals, Standard Mail, and Bound Printed Matter flats and irregular parcels:* the 5-digit ZIP Codes on pieces in carrier route, automation rate, and presorted rate bundles are all destined for the same mail processing facility listed in L006.

* * * * *

1.3 Preparation Instructions

For purposes of preparing mail:

* * * * *

[*Revise 1.3o through 1.3r to read as follows:*]

o. *A merged 5-digit sort for Periodicals, Standard Mail, and Bound Printed Matter flats and irregular parcels prepared as bundles on pallets* yields merged 5-digit pallets that contain carrier route bundles and noncarrier route 5-digit bundles (automation rate 5-digit bundles and/or presorted rate 5-digit bundles). The merged 5-digit sort is optional for Periodicals flats and irregular parcels and Standard Mail flats prepared in sacks under M920. Sacks or pallets prepared for a merged 5-digit destination that contain only a single rate level of bundle(s) (only carrier route bundle(s) or only automation rate 5-digit bundle(s) or only presorted rate 5-digit bundle(s)) or only two rate levels of bundle(s) are still considered to be merged 5-digit sorted and must be labeled accordingly.

p. *A merged 5-digit scheme sort for Periodicals flats and irregular parcels and Standard Mail flats prepared in sacks under M920* yields merged 5-digit scheme sacks that contain carrier route bundles and noncarrier route 5-digit bundles (automation rate 5-digit bundles and/or presorted rate 5-digit bundles) for those 5-digit ZIP Codes that are part of a single scheme as shown in L001. Sacks prepared for a merged 5-digit scheme destination that contain only a single rate level of bundle(s) (only carrier route bundle(s) or only automation rate 5-digit bundle(s) or only presorted rate 5-digit bundle(s)), or only two rate levels of bundle(s), or bundles for only one of the schemed 5-digit ZIP Codes are still considered to be merged 5-digit scheme sorted and must be labeled accordingly. If preparation of merged 5-digit scheme sacks is performed, it must be done for all 5-digit scheme destinations in L001.

q. *A merged 5-digit scheme sort for Periodicals flats and irregular parcels, Standard Mail flats and irregular parcels, and Bound Printer Matter flats and irregular parcels prepared as bundles on pallets under M045, M920, M930, or M940,* as appropriate, yields merged 5-digit scheme pallets that contain carrier route bundles and noncarrier route 5-digit bundles (automation rate and/or presorted rate 5-digit bundles) for those 5-digit ZIP Codes that are part of a single scheme as shown in L001. Pallets prepared for a merged 5-digit scheme destination that contain only a single rate level of bundle(s) (only carrier route bundle(s) or only automation rate 5-digit bundle(s) or only presorted rate 5-digit bundle(s)), or only two rate levels of bundle(s), or bundles for only one of the schemed 5-digit ZIP Codes are still considered to be merged 5-digit scheme sorted and must be labeled accordingly. If preparation of merged 5-digit scheme pallets is performed, it must be done for all 5-digit scheme destinations in L001.

r. *A 5-digit metro sort for Periodicals, Standard Mail, and Bound Printed Matter flats and irregular parcels prepared as bundles on pallets* yields 5-digit metro pallets that contain carrier route and/or noncarrier route 5-digit and 3-digit bundles (automation rate and/or presorted bundles) for the 5-digit ZIP Codes listed in L006. The ZIP Codes in L006 are treated as a single presort destination, with no further separation by 5-digit ZIP Code required. The 5-digit metro sort is optional and need not be done for all possible destinations in L006.

* * * * *

M040 Pallets

M041 General Standards

* * * * *

5.0 PREPARATION

* * * * *

5.6 Mail on Pallets

* * * * *

[*Combine current 5.6g and 5.6h into new 5.6g and redesignate current 5.6i as new 5.6h to read as follows:*]

f. For Bound Printed Matter irregular parcels, presorted and carrier route rate mail may be combined on all pallet levels. For Bound Printed Matter flats, presorted and carrier route rate mail may be combined on all levels of pallet except as provided in 5.6g.

g. For sacks of Periodicals, Standard Mail, and Bound Printed Matter flats or

irregular parcels, carrier route rate mail must be prepared on separate 5-digit pallets from automation rate and/or presorted rate mail.

h. Periodicals, Standard Mail, and Bound Printed Matter flats or irregular parcels prepared in carrier route and noncarrier route 5-digit bundles may be placed on the same merged 5-digit scheme, merged 5-digit, and 5-digit metro pallet, as appropriate.

* * * * *

M045 Palletized Mailings

* * * * *

2.0 BUNDLES ON PALLETS

2.1 Applicability

[*Revise 2.1 to read as follows:*]

Presort destination bundles of Periodicals, Standard Mail, and Package Services flats and irregular parcels may be placed directly on pallets under 2.2 through 2.5, 3.0 (and, until January 6, 2005, under 15.0). Mail that cannot be placed on pallets must be prepared in sacks under the applicable standards in M200, M600, M700, M910, or M920. Sacks containing any remaining bundles after all pallets are prepared may be presented with the palletized portion of the mailing job (and, subject to 8.5, reported on the same postage statement) if the sacked portion is presented seprately from the palletized portion.

2.2 Basic Bundling Standards

[*Revise 2.2 to read as follows:*]

Bundle preparation for Periodicals, Standard Mail, and Package Services mailpieces must meet the general standards in M010 and M020 as well as the applicable standards in M200, M600, M700, M820, and M950, except as noted in 2.3 through 2.5. Bundles may be sorted onto pallets under 3.0 (and, until January 6, 2005, under 15.0), as well as M920, M930, and M940.

* * * * *

2.5 Bound Printed Matter

* * * * *

[*Revise 2.5b by combining current 2.5b and 2.5c into new 2.5b to read as follows:*]

b. Presorted and Carrier Route Bound Printed Matter:

(1) Only individual pieces of flats or irregular parcels that weigh less than 10 pounds each may be prepared as bundles on pallets. Presorted rate pieces that weigh 10 or more pounds each must be prepared and palletized as machinable parcels under 3.5 or prepared in sacks under M722. Carrier Route pieces that individually weigh 10 or more pounds each must either be prepared and palletized as machinable parcels under 3.5 and qualify for presorted rates or be prepared in sacks under M723 and qualify for carrier route rates.

(2) Bundles must be prepared under M722, M723, or M950, as appropriate. The minimum bundle size is 10 addressed pieces or 10 pounds, whichever occurs first, except that the last bundle to a presort destination may contain fewer than 10 pieces or weigh less than 10 pounds. When there are at least 10 pieces but less than 10 pounds for a presort destination, the pieces must be prepared in a single physical bundle. The maximum physical bundle size for pallets prepared under 3.3a through 3.3g, and 3.4a through 3.4g is 40 pounds. The maximum physical bundle size for pallets prepared under 3.3h through 3.3l, and 3.4h through 3.4l is 20 pounds. The total number of bundles for a single presort destination must not exceed the number of 10-pound increments to that destination. Each physical bundle must contain at least two addressed pieces.

[*Delete current 2.5c.*]

[*Redesignate current 3.0 as new 15.0. Add new 3.0 to read as follows:*]

* * * * *

3.0 PALLET PRESORT AND LABELING

3.1 Periodicals—Bundles, Sacks, or Trays

Until January 6, 2005, Periodicals mailings may also be palletized under 15.1. Pallets must be prepared under M041 in the sequence listed below and completed at each required level before the next optional or required level is prepared. Unless indicated as optional, all sort levels are required under the conditions shown. See E250 for additional requirements for destination entry rates eligibility. For mailings of sacks or trays on pallets, pallet preparation begins with 3.1e. Pallets must be labeled according to the Line 1 and Line 2 information listed below and under M031. All pallets prepared under 3.1 may contain firm bundles, and pallets prepared under 3.1a through 3.1i may contain low-volume bundles. Bundles of Periodicals nonletters (flats and irregular parcels) may also be palletized under M920, M930, or M940.

a. *Merged 5-Digit Scheme (required).* Permitted for bundles only. Not permitted for bundles containing noncarrier route AFSM 100-compatible flats under C820.

Required for bundles containing all other flats or irregular parcels. Pallet must contain carrier route bundles and noncarrier route 5-digit bundles (automation rate and/or presorted rate bundles) for the same 5-digit scheme under L001. For 5-digit destinations not part of L001, merged 5-digit pallet preparation begins with 3.1d. Pallet labeling:

(1) Line 1: L001.

(2) Line 2: ''PER'' or ''NEWS,'' as applicable; followed by ''FLTS'' or ''IRREG,'' as applicable; followed by ''CR/5D''; followed by ''SCHEME'' (or ''SCH'').

b. *5-Digit Scheme Carrier Routes (required).* Permitted for bundles only. Pallet must contain only carrier route bundles for the same 5-digit scheme under L001. For 5-digit destinations not part of L001, 5-digit carrier routes pallet preparation begins with 3.1e. Pallet labeling:

(1) Line 1: L001.

(2) Line 2: ''PER'' or ''NEWS,'' as applicable; followed by ''FLTS'' or ''IRREG,'' as applicable; followed by ''CARRIER ROUTES'' (or ''CR–RTS''); followed by ''SCHEME'' (or ''SCH'').

c. *5-Digit Scheme (required).* Permitted for bundles only. Not permitted for bundles containing AFSM 100-compatible flats under C820. Required for bundles containing all other flats and irregular parcels. Pallet must contain only 5-digit bundles of automation rate and/or presorted rate mail for the same 5-digit scheme under L001. For 5-digit destinations not part of L001, 5-digit pallet preparation begins with 3.1f. Pallet labeling:

(1) Line 1: L001.

(2) Line 2: ''PER'' or ''NEWS,'' as applicable; followed by ''FLTS'' or ''IRREG,'' as applicable; followed by ''5D''; followed by ''BARCODED'' (or ''BC'') if pallet contains automation rate mail; followed by ''NONBARCODED'' (or ''NBC'') if pallet contains presorted rate mail; followed by ''SCHEME'' (or ''SCH'').

d. *Merged 5-Digit (required).* Permitted for bundles only. Not permitted for bundles containing noncarrier route AFSM 100-compatible flats under C820. Required for bundles containing all other flats or irregular parcels. Pallet must contain carrier route bundles and noncarrier route 5-digit bundles (automation rate and/or presorted rate bundles) for the same 5-digit ZIP Code. Pallet labeling:

(1) Line 1: city, state, and 5-digit ZIP Code destination (see M031 for overseas military mail).

(2) Line 2: ''PER'' or ''NEWS,'' as applicable; followed by ''FLTS'' or ''IRREG,'' as applicable; followed by ''CR/5D.''

e. *5-Digit Carrier Routes (required except for trays).* Permitted for bundles, sacks, and trays. Pallet must contain

only carrier route mail for the same 5-digit ZIP Code. Pallet labeling:

(1) Line 1: city, state, and 5-digit ZIP Code destination (see M031 for overseas military mail).

(2) Line 2: ''PER'' or ''NEWS,'' as applicable; followed by ''FLTS,'' ''IRREG,'' or ''LTRS,'' as applicable; followed by ''CARRIER ROUTES'' (or ''CR–RTS'').

f. *5-Digit (required except for trays).* Permitted for bundles, sacks, and trays. Pallet must contain only automation rate and/or presorted rate mail for the same 5-digit ZIP Code or the same 5-digit scheme under L007 (for AFSM 100-compatible flats only under C820). Five-digit scheme (L007) bundles are assigned to pallets according to the OEL ''label to'' 5-digit ZIP Code. Pallet labeling:

(1) Line 1: city, state, and 5-digit ZIP Code destination (see M031 for overseas military mail).

(2) Line 2: ''PER'' or ''NEWS,'' as applicable; followed by ''FLTS,'' ''IRREG,'' or ''LTRS,'' as applicable; followed by ''5D''; followed by ''BARCODED'' (or ''BC'') if pallet contains automation rate mail; followed by ''NONBARCODED'' (or ''NBC'') if pallet contains presorted rate mail.

g. *5-Digit Metro (optional).* Permitted for bundles only. Pallet may contain carrier route, automation rate, and/or presorted rate bundles for the 5-digit ZIP Codes in L006, Column A, and for 3-digit ZIP Code groups in L006, Column B. Pallet labeling:

(1) Line 1: L006.

(2) Line 2: ''PER'' or ''NEWS,'' as applicable; followed by ''FLTS'' or ''IRREG,'' as applicable; followed by ''METRO'' (or ''MET''); followed by ''BARCODED'' (or ''BC'') if pallet contains automation rate mail; followed by ''NONBARCODED'' (or ''NBC'') if pallet contains carrier route and/or presorted rate mail.

h. *3-Digit (optional).* Option not available for 3-digit ZIP Code prefixes marked ''N'' in L002. Permitted for bundles, sacks, and trays. Pallet may contain carrier route, automation rate, and/or presorted rate mail. Pallet labeling:

(1) Line 1: L002, Column A.

(2) Line 2: ''PER'' or ''NEWS,'' as applicable; followed by ''FLTS,'' ''IRREG,'' or ''LTRS,'' as applicable; followed by ''3D''; followed by ''BARCODED'' (or ''BC'') if pallet contains automation rate mail; followed by ''NONBARCODED'' (or ''NBC'') if pallet contains carrier route and/or presorted rate mail.

i. *SCF (required).* Permitted for bundles, sacks, and trays. Pallet may contain carrier route, automation rate, and/or presorted rate mail for the 3-digit ZIP Code groups in L005. Pallet labeling:

(1) Line 1: L002, Column C.

(2) Line 2: ''PER'' or ''NEWS,'' as applicable; followed by ''FLTS,'' ''IRREG,'' or ''LTRS,'' as applicable; followed by ''SCF''; followed by ''BARCODED'' (or ''BC'') if pallet contains automation rate mail; followed by ''NONBARCODED'' (or ''NBC'') if pallet contains carrier route and/or presorted rate mail.

j. *ADC (required).* Permitted for bundles, sacks, and trays. Pallet may contain carrier route, automation rate, and/or presorted rate mail for the 3-digit ZIP Code groups in L004. Pallet labeling:

(1) Line 1: L004.

(2) Line 2: ''PER'' or ''NEWS,'' as applicable; followed by ''FLTS,'' ''IRREG,'' or ''LTRS,'' as applicable; followed by ''ADC''; followed by ''BARCODED'' (or ''BC'') if pallet contains automation rate mail; followed by ''NONBARCODED'' (or ''NBC'') if pallet contains carrier route and/or presorted rate mail.

k. *Mixed ADC (optional).* Permitted for sacks and trays only. Pallet may contain carrier route, automation rate, and/or presorted rate mail. Pallet labeling:

(1) Line 1: ''MXD'' followed by city, state, and ZIP Code information for ADC serving 3-digit ZIP Code prefix of entry post office as shown in L004, Column A (label to plant serving entry post office if authorized by processing and distribution manager).

(2) Line 2: ''PER'' or ''NEWS,'' as applicable; followed by ''FLTS,'' ''IRREG,'' or ''LTRS,'' as applicable; followed by ''BARCODED'' (or ''BC'') if pallet contains automation rate mail; followed by ''NONBARCODED'' (or ''NBC'') if pallet contains carrier route and/or presorted rate mail; followed by ''WKG.''

3.2 Standard Mail—Bundles, Sacks, or Trays

Until January 6, 2005, Standard Mail mailings may also be palletized under 15.2. Pallets must be prepared under M041 in the sequence listed below and completed at each required level before the next optional or required level is prepared. Unless indicated as optional, all sort levels are required under the conditions shown. See E650 for additional requirements for destination entry rates eligibility. Irregular parcels prepared in bundles directly onto pallets are limited those mailpieces that are of uniform thickness and more than 15 inches long or more than 12 inches high. For mailings of sacks or trays on pallets, pallet preparation begins with 3.2d. Pallets must be labeled according to the Line 1 and Line 2 information listed below and under M031. Bundles of Standard Mail flats may also be palletized under M920, M930, or M940.

a. *Merged 5-Digit Scheme (required).* Permitted for bundles only. Not permitted for bundles containing noncarrier route AFSM 100-compatible flats under C820. Required for bundles containing all other flats or irregular parcels. Pallet must contain carrier route bundles and noncarrier route 5-digit bundles (automation rate and/or presorted rate bundles) for the same 5-digit scheme under L001. For 5-digit destinations not part of L001, merged 5-digit pallet preparation begins with 3.2c. Pallet labeling:

(1) Line 1: L001.

(2) Line 2: ''STD'' followed by ''FLTS'' or ''IRREG,'' as applicable; followed by ''CR/5D''; followed by ''SCHEME'' (or ''SCH'').

b. *5-Digit Scheme Carrier Routes (required).* Permitted for bundles only. Pallet must contain only carrier route bundles for the same 5-digit scheme under L001. For 5-digit destinations not part of L001, 5-digit carrier routes pallet preparation begins with 3.2d. Pallet labeling:

(1) Line 1: L001.

(2) Line 2: ''STD'' followed by ''FLTS'' or ''IRREG,'' as applicable; followed by ''CARRIER ROUTES'' (or ''CR–RTS''); followed by ''SCHEME'' (or ''SCH'').

c. *Merged 5-Digit (required).* Permitted for bundles only. Not permitted for bundles containing noncarrier route AFSM 100-compatible flats under C820. Required for bundles containing all other flats or irregular parcels. Pallet must contain carrier route bundles and noncarrier route 5-digit bundles (automation rate and/or presorted rate bundles) for the same 5-digit ZIP Code. Pallet labeling:

(1) Line 1: city, state, and 5-digit ZIP Code destination (see M031 for overseas military mail).

(2) Line 2: ''STD'' followed by ''FLTS'' or ''IRREG,'' as applicable; followed by ''CR/5D.''

d. *5-Digit Carrier Routes (required except for trays).* Permitted for bundles, sacks, and trays. Pallet must contain only carrier route mail for the same 5-digit ZIP Code. Pallet labeling:

(1) Line 1: city, state, and 5-digit ZIP Code destination (see M031 for overseas military mail).

(2) Line 2: For flats and irregular parcels, ''STD'' followed by ''FLTS'' or ''IRREG,'' as applicable; followed by ''CARRIER ROUTES'' (or ''CR–RTS''). For letters, ''STD LTRS'; followed by ''CARRIER ROUTES'' (or ''CR–RTS'');

followed by ''BC'' if pallet contains barcoded letters; followed by ''MACH'' if pallet contains machinable letters; followed by ''MAN'' if pallet contains nonmachinable letters.

e. *5-Digit (required except for trays).* Permitted for bundles, sacks, and trays. Pallet must contain only automation rate and/or Presorted rate mail for the same 5-digit ZIP Code or same 5-digit scheme under L007 (for AFSM 100-compatible flats only under C820). Five-digit scheme (L007) bundles are assigned to 5-digit pallets according to the OEL ''label to'' 5-digit ZIP Code. Pallet labeling:

(1) Line 1: city, state, and 5-digit ZIP Code destination (see M031 for overseas military mail).

(2) Line 2: For flats and irregular parcels, ''STD'' followed by ''FLTS'' or ''IRREG,'' as applicable; followed by ''5D''; followed by ''BARCODED'' (or ''BC'') if pallet contains automation rate mail; followed by ''NONBARCODED'' (or ''NBC'') if pallet contains Presorted rate mail. For letters, ''STD LTRS 5D''; followed by ''BC'' if pallet contains barcoded letters; followed by ''MACH'' if pallet contains machinable letters; followed by ''MAN'' if pallet contains nonmachinable letters.

f. *5-Digit Metro (optional).* Permitted for bundles only. Pallet may contain carrier route, automation rate, and/or Presorted rate bundles for the 5-digit ZIP Codes in L006, Column A, and for 3-digit ZIP Code groups in L006, Column B. Pallet labeling:

(1) Line 1: L006.

(2) Line 2: For flats and irregular parcels, ''STD'' followed by ''FLTS'' or ''IRREG,'' as applicable; followed by ''METRO'' (or ''MET''); followed by ''BARCODED'' (or ''BC'') if pallet contains automation rate mail; followed by ''NONBARCODED'' (or ''NBC'') if pallet contains carrier route and/or Presorted rate mail.

g. *3-Digit (optional).* Option not available for 3-digit ZIP Code prefixes marked ''N'' in L002. Permitted for bundles, sacks, and trays. Pallet may contain carrier route, automation rate, and/or Presorted rate mail. Pallet labeling:

(1) Line 1: L002, Column A.

(2) Line 2: For flats and irregular parcels, ''STD'' followed by ''FLTS'' or ''IRREG,'' as applicable; followed by ''3D''; followed by ''BARCODED'' (or ''BC'') if pallet contains automation rate mail; followed by ''NONBARCODED'' (or ''NBC'') if pallet contains carrier route and/or Presorted rate mail. For letters, ''STD LTRS 3D''; followed by ''BC'' if pallet contains barcoded letters; followed by ''MACH'' if pallet contains machinable letters; followed by ''MAN'' if pallet contains nonmachinable letters.

h. *SCF (required).* Permitted for bundles, sacks, and trays. Pallet may contain carrier route, automation rate, and/or Presorted rate mail for the 3-digit ZIP Code groups in L005. Pallet labeling:

(1) Line 1: L002, Column C.

(2) Line 2: For flats and irregular parcels, ''STD'' followed by ''FLTS'' or ''IRREG,'' as applicable; followed by ''SCF''; followed by ''BARCODED'' (or ''BC'') if pallet contains automation rate mail; followed by ''NONBARCODED'' (or ''NBC'') if pallet contains carrier route and/or Presorted rate mail. For letters, ''STD LTRS SCF''; followed by ''BC'' if pallet contains barcoded letters; followed by ''MACH'' if pallet contains machinable letters; followed by ''MAN'' if pallet contains nonmachinable letters.

i. *ASF (required, unless bundle reallocation used under 5.0).* Permitted for bundles, sacks, and trays. Pallet may contain carrier route, automation rate, and/or Presorted rate mail for the 3-digit ZIP Code groups in L602. ADC bundles, sacks, or trays are assigned to pallets according to the ''label to'' ZIP Code in L004 or L603, as appropriate. AADC trays are assigned to pallets according to the ''label to'' ZIP Code for the AADC tray in L801. At the mailer's option, appropriate mixed ADC bundles, sacks, or trays and mixed AADC trays may be sorted to ASF pallets according to the ''label to'' ZIP Code in L802. All mixed ADC bundles, sacks, and trays and mixed AADC trays must contain only pieces destinating within the ASF in Exhibit E650.5.1. Pallet labeling:

(1) Line 1: L602.

(2) Line 2: For flats and irregular parcels, ''STD'' followed by ''FLTS'' or ''IRREG,'' as applicable; followed by ''ASF''; followed by ''BARCODED'' (or ''BC'') if pallet contains automation rate mail; followed by ''NONBARCODED'' (or ''NBC'') if pallet contains carrier route and/or Presorted rate mail. For letters, ''STD LTRS ASF''; followed by ''BC'' if pallet contains barcoded letters; followed by ''MACH'' if pallet contains machinable letters; followed by ''MAN'' if pallet contains nonmachinable letters.

j. *BMC (required).* Permitted for bundles, sacks, and trays. Pallet may contain carrier route, automation rate, and/or Presorted rate mail for the 3-digit ZIP Code groups in L601. ADC bundles, sacks, or trays are assigned to pallets according to the ''label to'' ZIP Code in L004 or L603, as appropriate. AADC trays are assigned to pallets according to the ''label to'' ZIP Code for the AADC tray in L801. At the mailer's option, appropriate mixed ADC bundles, sacks, or trays and mixed AADC trays may be sorted to BMC pallets according to the ''label to'' ZIP Code in L802. All mixed ADC bundles, sacks, and trays and mixed AADC trays must contain only pieces destinating within the BMC in Exhibit E650.5.1. Pallet labeling:

(1) Line 1: L601.

(2) Line 2: For flats and irregular parcels, ''STD'' followed by ''FLTS'' or ''IRREG,'' as applicable; followed by ''BMC''; followed by ''BARCODED'' (or ''BC'') if pallet contains automation rate mail; followed by ''NONBARCODED'' (or ''NBC'') if pallet contains carrier route and/or Presorted rate mail. For letters, ''STD LTRS BMC''; followed by ''BC'' if pallet contains barcoded letters; followed by ''MACH'' if pallet contains machinable letters; followed by ''MAN'' if pallet contains nonmachinable letters.

k. *Mixed BMC (optional).* Permitted for sacks and trays only. Pallet may contain carrier route, automation rate, and/or Presorted rate mail. Pallet labeling:

(1) Line 1: ''MXD'' followed by information in L601, Column B, for BMC serving 3-digit ZIP Code prefix of entry post office (label to plant serving entry post office if authorized by processing and distribution manager).

(2) Line 2: For flats and irregular parcels, ''STD'' followed by ''FLTS'' or ''IRREG,'' as applicable; followed by ''BARCODED'' (or ''BC'') if pallet contains automation rate mail; followed by ''NONBARCODED'' (or ''NBC'') if pallet contains carrier route and/or Presorted rate mail; followed by ''WKG.'' For letters, ''STD LTRS''; followed by ''BC'' if pallet contains barcoded letters; followed by ''MACH'' if pallet contains machinable letters; followed by ''MAN'' if pallet contains nonmachinable letters; followed by ''WKG.''

3.3 Package Services Flats—Bundles and Sacks

Until January 6, 2005, Package Services mailings of flats may also be palletized under 15.3. Pallets must be prepared under M041 in the sequence listed below and completed at each required level before the next optional or required level is prepared. Unless indicated as optional, all sort levels are required under the conditions shown. Carrier route mail and presorted rate mail with a barcode apply only to Bound Printed Matter mailings. Destination entry rate eligibility also applies only to Bound Printed Matter (see E752). At the mailer's option, all Package Services flats may be prepared for destination entry. For mailings of sacks on pallets, pallet preparation begins with 3.3e. Pallets must be labeled according to the Line 1 and Line 2

information listed below and under M031.

a. *Merged 5-Digit Scheme (required).* Permitted for bundles only. Not permitted for bundles containing noncarrier route AFSM 100-compatible flats under C820. Required for bundles containing all other flats. Pallet must contain carrier route bundles and noncarrier route 5-digit bundles (presorted rate bundles) for the same 5-digit scheme under L001. For 5-digit destinations not part of L001, merged 5-digit pallet preparation begins with 3.3d. Pallet labeling:

(1) Line 1: L001.

(2) Line 2: ''PSVC FLTS CR/5D''; followed by ''SCHEME'' (or ''SCH'').

b. *5-Digit Scheme Carrier Routes (required).* Permitted for bundles only. Pallet must contain only carrier route bundles for the same 5-digit scheme under L001. For 5-digit destinations not part of L001, 5-digit carrier routes pallet preparation begins with 3.3e. Pallet labeling:

(1) Line 1: L001.

(2) Line 2: ''PSVC FLTS''; followed by ''CARRIER ROUTES'' (or ''CR–RTS''); followed by ''SCHEME'' (or ''SCH'').

c. *5-Digit Scheme (required).* Permitted for bundles only. Not permitted for bundles containing AFSM 100-compatible flats under C820. Required for bundles containing all other flats. Pallet must contain only 5-digit bundles of presorted rate mail for the same 5-digit scheme under L001. For 5-digit destinations not part of L001, 5-digit pallet preparation begins with 3.3f. Pallet labeling:

(1) Line 1: L001.

(2) Line 2: ''PSVC FLTS 5D''; followed by ''SCHEME'' (or ''SCH'').

d. *Merged 5-Digit (required).* Permitted for bundles only. Not permitted for bundles containing noncarrier route AFSM 100-compatible flats under C820. Required for bundles containing all other flats. Pallet must contain carrier route bundles and noncarrier route 5-digit bundles (presorted rate bundles) for the same 5-digit ZIP Code. Pallet labeling:

(1) Line 1: city, state, and 5-digit ZIP Code destination (see M031 for overseas military mail).

(2) Line 2: ''PSVC FLTS CR/5D.''

e. *5-Digit Carrier Routes (required).* Permitted for bundles and sacks. Pallet must contain only carrier route mail for the same 5-digit ZIP Code. Pallet labeling:

(1) Line 1: city, state, and 5-digit ZIP Code destination (see M031 for overseas military mail).

(2) Line 2: ''PSVC FLTS''; followed by ''CARRIER ROUTES'' (or ''CR–RTS'').

f. *5-Digit (required).* Permitted for bundles and sacks. Pallet must contain only Presorted rate mail with or without a barcode for the same 5-digit ZIP Code or same 5-digit scheme under L007 (for AFSM 100-compatible flats only under C820). Five-digit scheme (L007) bundles are assigned to pallets according to the OEL ''label to'' 5-digit ZIP Code. Pallet labeling:

(1) Line 1: city, state, and 5-digit ZIP Code destination (see M031 for overseas military mail).

(2) Line 2: ''PSVC FLTS 5D''; followed by ''BARCODED'' (or ''BC'') if pallet contains presorted rate mail with a barcode; followed by ''NONBARCODED'' (or ''NBC'') if pallet contains presorted rate mail without a barcode.

g. *5-Digit Metro (optional).* Permitted for bundles only. Pallet may contain carrier route and/or presorted rate mail with or without a barcode for the 5-digit ZIP Codes in L006, Column A, and for the 3-digit ZIP Code groups in L006, Column B. Pallet labeling:

(1) Line 1: L006.

(2) Line 2: ''PSVC FLTS''; followed by ''METRO'' (or ''MET''); followed by ''BARCODED'' (or ''BC'') if pallet contains presorted rate mail with a barcode; followed by ''NONBARCODED'' (or ''NBC'') if pallet contains carrier route and/or presorted rate mail without a barcode.

h. *3-Digit (optional).* Option not available for 3-digit ZIP Code prefixes marked ''N'' in L002. Permitted for bundles and sacks. Pallet may contain carrier route and/or presorted rate mail with or without a barcode. Pallet labeling:

(1) Line 1: L002, Column A.

(2) Line 2: ''PSVC FLTS 3D''; followed by ''BARCODED'' (or ''BC'') if pallet contains presorted rate mail with a barcode; followed by ''NONBARCODED'' (or ''NBC'') if pallet contains carrier route and/or presorted rate mail without a barcode.

i. *SCF (required).* Permitted for bundles and sacks. Pallet may contain carrier route and/or presorted rate mail with or without a barcode for the 3-digit ZIP Code groups in L005. Pallet labeling:

(1) Line 1: L002, Column C.

(2) Line 2: ''PSVC FLTS SCF''; followed by ''BARCODED'' (or ''BC'') if pallet contains presorted rate mail with a barcode; followed by ''NONBARCODED'' (or ''NBC'') if pallet contains carrier route and/or presorted rate mail without a barcode.

j. *ASF (required).* Permitted for bundles and sacks. Pallet may contain carrier route and/or presorted rate mail with or without a barcode for the 3-digit ZIP Code groups in L602. ADC bundles or sacks are assigned to pallets according to the ''label to'' ZIP Code in L004. At the mailer's option, appropriate mixed ADC bundles or sacks may be sorted to ASF pallets according to the ''label to'' ZIP Code in L802. All mixed ADC bundles and sacks must contain only pieces destinating within the ASF in Exhibit E751.1.3. Pallet labeling:

(1) Line 1: L602.

(2) Line 2: ''PSVC FLTS ASF''; followed by ''BARCODED'' (or ''BC'') if pallet contains presorted rate mail with a barcode; followed by ''NONBARCODED'' (or ''NBC'') if pallet contains carrier route and/or presorted rate mail without a barcode.

k. *BMC (required).* Permitted for bundles and sacks. Pallet may contain carrier route and/or presorted rate mail with or without a barcode for the 3-digit ZIP Code groups in L601. ADC bundles or sacks are assigned to pallets according to the ''label to'' ZIP Code in L004. At the mailer's option, appropriate mixed ADC bundles or sacks may be sorted to BMC pallets according to the ''label to'' ZIP Code in L802. All mixed ADC bundles and sacks must contain only pieces destinating within the BMC in Exhibit E751.1.3. Pallet labeling:

(1) Line 1: L601.

(2) Line 2: ''PSVC FLTS BMC''; followed by ''BARCODED'' (or ''BC'') if pallet contains presorted rate mail with a barcode; followed by ''NONBARCODED'' (or ''NBC'') if pallet contains carrier route and/or presorted rate mail without a barcode.

l. *Mixed BMC (optional).* Permitted for sacks only. Pallet may contain carrier route and/or presorted rate mail with or without a barcode. Pallet labeling:

(1) Line 1: ''MXD'' followed by information in L601, Column B, for BMC serving 3-digit ZIP Code prefix of entry post office (label to plant serving entry post office if authorized by processing and distribution manager).

(2) Line 2: ''PSVC FLTS WKG.''

3.4 Package Services Irregular Parcels—Bundles and Sacks

Until January 6, 2005, Package Services mailings of irregular parcels may also be palletized under 15.4. Pallets must be prepared under M041 in the sequence listed below and completed at each required level before the next optional or required level is prepared. Unless indicated as optional, all sort levels are required under the conditions shown. Carrier route (3.4a, 3.4b, 3.4d, and 3.4e) applies to Bound Printed Matter mailings only. Destination entry rate eligibility applies only to Parcel Select (see E751) and Bound Printed Matter (see E752). At the

mailer's option, all Package Services irregular parcels also may be prepared for destination entry (see E753). For mailings of sacks on pallets, pallet preparation begins with 3.4e. Pallets must be labeled according to the Line 1 and Line 2 information listed below and under M031.

a. *Merged 5-Digit Scheme (required).* Permitted for bundles only. Pallet must contain carrier route bundles and noncarrier route 5-digit bundles (presorted rate bundles) for the same 5-digit scheme under L001. For 5-digit destinations not part of L001, merged 5-digit pallet preparation begins with 3.4d. Pallet labeling:

(1) Line 1: L001.

(2) Line 2: ''PSVC IRREG CR/5D''; followed by ''SCHEME'' (or ''SCH'').

b. *5-Digit Scheme Carrier Routes (required).* Permitted for bundles only. Pallet must contain only carrier route bundles for the same 5-digit scheme under L001. For 5-digit destinations not part of L001, 5-digit carrier routes pallet preparation begins with 3.3e. Pallet labeling:

(1) Line 1: L001.

(2) Line 2: ''PSVC IRREG''; followed by ''CARRIER ROUTES'' (or ''CR–RTS''); followed by ''SCHEME'' (or ''SCH'').

c. *5-Digit Scheme (required).* Permitted for bundles only. Pallet must contain only 5-digit bundles of presorted rate mail for the same 5-digit scheme under L001. For 5-digit destinations not part of L001, 5-digit pallet preparation begins with 3.4d. Pallet labeling:

(1) Line 1: L001.

(2) Line 2: ''PSVC IRREG 5D''; followed by ''SCHEME'' (or ''SCH'').

d. *Merged 5-Digit (required).* Permitted for bundles only. Pallet must contain carrier route bundles and noncarrier route 5-digit bundles (presorted rate bundles) for the same 5-digit ZIP Code. Pallet labeling:

(1) Line 1: city, state, and 5-digit ZIP Code destination (see M031 for overseas military mail).

(2) Line 2: ''PSVC IRREG CR/5D.''

e. *5-Digit Carrier Routes (required).* Permitted for bundles and sacks. Pallet must contain only carrier route mail for the same 5-digit ZIP Code. Pallet labeling:

(1) Line 1: city, state, and 5-digit ZIP Code destination (see M031 for overseas military mail).

(2) Line 2: ''PSVC IRREG''; followed by ''CARRIER ROUTES'' (or ''CR–RTS'').

f. *5-Digit (required).* Permitted for bundles and sacks. Pallet must contain only presorted rate mail for the same 5-digit ZIP Code. Pallet labeling:

(1) Line 1: city, state, and 5-digit ZIP Code destination (see M031 for overseas military mail).

(2) Line 2: ''PSVC IRREG 5D.''

g. *5-Digit Metro (optional).* Permitted for bundles only. Pallet must contain carrier route and/or presorted rate bundles for the 5-digit ZIP Codes in L006, Column A, and for the 3-digit ZIP Code groups in L006, Column B. Pallet labeling:

(1) Line 1: L006.

(2) Line 2: ''PSVC IRREG''; followed by ''METRO'' (or ''MET'').

h. *3-Digit (optional).* Option not available for 3-digit ZIP Code prefixes marked ''N'' in L002. Permitted for bundles and sacks. Pallet may contain carrier route and/or presorted rate mail. Pallet labeling:

(1) Line 1: L002, Column A.

(2) Line 2: ''PSVC IRREG 3D.''

i. *SCF (required).* Permitted for bundles and sacks. Pallet may contain carrier route and/or presorted rate mail for the 3-digit ZIP Code groups in L005. Pallet labeling:

(1) Line 1: L002, Column C.

(2) Line 2: ''PSVC IRREG SCF.''

j. *ASF (required).* Permitted for bundles and sacks. Pallet may contain carrier route and/or presorted rate mail for the 3-digit ZIP Code groups in L602. ADC bundles or sacks are assigned to pallets according to the ''label to'' ZIP Code in L004. At the mailer's option, appropriate mixed ADC bundles or sacks may be sorted to ASF pallets according to the ''label to'' ZIP Code in L802. All mixed ADC bundles and sacks must contain only pieces destinating within the ASF in Exhibit E751.1.3. Pallet labeling:

(1) Line 1: L602.

(2) Line 2: ''PSVC IRREG ASF.''

k. *BMC (required).* Permitted for bundles and sacks. Pallet may contain carrier route and/or presorted rate mail for the 3-digit ZIP Code groups in L601. ADC (L004) bundles or sacks are assigned to pallets according to the ''label to'' ZIP Code in L004. At the mailer's option, appropriate mixed ADC bundles or sacks may be sorted to BMC pallets according to the ''label to'' ZIP Code in L802. All mixed ADC bundles and sacks must contain only pieces destinating within the BMC in Exhibit E751.1.3. Pallet labeling:

(1) Line 1: L601.

(2) Line 2: ''PSVC IRREG BMC.''

l. *Mixed BMC (optional).* Permitted for sacks only. Pallet may contain carrier route and/or presorted rate mail. Pallet labeling:

(1) Line 1: ''MXD'' followed by information in L601, Column B, for BMC serving 3-digit ZIP Code prefix of entry post office (or labeled to plant serving entry post office if authorized by processing and distribution manager).

(2) Line 2: ''PSVC IRREG WKG.''

3.5 Machinable Parcels—Standard Mail and Package Services

Until January 6, 2005, Standard Mail and Package Services mailings of machinable parcels may also be palletized under 15.5. Pallets must be prepared under M041 in the sequence listed below and completed at each required level before the next optional or required level is prepared. Unless indicated as optional, all sort levels are required under the conditions shown. At the mailer's option, Inter-BMC/ASF and Intra-BMC/ASF Parcel Post mailings may be prepared on pallets under this section. Destination entry rates eligibility applies only to Standard Mail (see E650), Parcel Select (see E751), and Bound Printed Matter (see E752). At the mailer's option, all Package Services machinable parcels also may be prepared for destination entry (see E753). Combined mailings of Standard Mail and Package Services machinable parcels must also meet the standards in M073. Pallets must be labeled according to the Line 1 and Line 2 information listed below and under M031.

a. *5-Digit Scheme (optional).* Pallet may contain parcels for the same 5-digit scheme under L606. Pallets need not be prepared for all 5-digit scheme destinations. For 5-digit destinations not part of L606, or for which scheme sorts are not performed, 5-digit pallets are prepared under 3.5b. Pallet labeling:

(1) Line 1: L606.

(2) Line 2: ''STD MACH 5D'' or ''PSVC MACH 5D,'' as applicable; followed by ''SCHEME'' (or ''SCH'').

b. *5-Digit (required).* Optional for Standard Mail if ⅗ rates are not claimed. Pallet must contain parcels only for the same 5-digit ZIP Code. Pallet labeling:

(1) Line 1: city, state, and 5-digit ZIP Code destination (see M031 for military mail).

(2) Line 2: ''STD MACH 5D'' or ''PSVC MACH 5D,'' as applicable.

c. *ASF (required if claiming DBMC rates, otherwise optional).* Not available for the Buffalo, NY ASF in L602. Pallets must contain only parcels for the 3-digit ZIP Code groups in L602.

(1) Line 1: L602.

(2) Line 2: ''STD MACH ASF'' or ''PSVC MACH ASF,'' as applicable.

d. *BMC (required).* Pallets must contain only parcels for the 3-digit ZIP Code groups in L601. Pallet labeling:

(1) Line 1: L601.

(2) Line 2: ''STD MACH BMC'' or ''PSVC MACH BMC,'' as applicable.

e. *Mixed BMC (optional).* Pallet labeling:

(1) Line 1: ''MXD'' followed by information in L601, Column B, for

BMC serving 3-digit ZIP Code prefix of entry post office (or labeled to plant serving entry post office if authorized by processing and distribution manager).

(2) Line 2: ''STD MACH WKG'' or ''PSVC MACH WKG,'' as applicable.

* * * * *

[*Redesignate current 3.0 as new 15.0, and renumber accordingly.*]

15.0 PALLET PRESORT AND LABELING (Effective until January 6, 2005)

* * * * *

M200 Periodicals (Nonautomation)

M210 Presorted Periodicals

1.0 BASIC STANDARDS

* * * * *

1.5 Low-Volume Bundles and Sacks

[*Revise 1.5 to read as follows:*]

As a general exception to 2.0 and 4.0, nonletter-size Periodicals may be prepared in low-volume 5-digit and 3-digit bundles containing fewer than six pieces when the publisher determines that such preparation improves service, if those bundles are placed in 5-digit, 3-digit, and SCF sacks. Low-volume bundles also may be placed on merged 5-digit scheme, 5-digit scheme, merged 5-digit, 5-digit, 5-digit metro, 3-digit, and SCF pallets.

* * * * *

M220 Carrier Route Periodicals

1.0 BASIC INFORMATION

* * * * *

1.5 Low-Volume Bundles and Sacks

[*Revise 1.5 to read as follows:*]

As a general exception to 2.4 and 4.0, nonletter-size Periodicals may be prepared in low-volume carrier route bundles containing fewer than six pieces when the publisher determines that such preparation improves service, if those bundles are placed in merged 5-digit scheme, 5-digit scheme carrier routes, merged 5-digit, or 5-digit carrier routes sacks. Low-volume carrier route bundles also may be placed on merged 5-digit scheme, 5-digit scheme carrier routes, merged 5-digit, 5-digit carrier routes, 5-digit metro, 3-digit, and SCF pallets.

* * * * *

M800 All Automation Mail

* * * * *

M820 Flat-Size Mail

1.0 BASIC STANDARDS

* * * * *

1.9 Exception—Periodicals Preparation

[*Revise 1.9 to read as follows:*]

As a general exception to 4.1 and 4.2, Periodicals may be prepared in low-volume 5-digit scheme, 5-digit, and 3-digit bundles containing fewer than six pieces, when the publisher determines that such preparation improves service, if those bundles are placed in 5-digit scheme, 5-digit, and 3-digit sacks under M820. Low-volume bundles may also be placed in merged 5-digit scheme, merged 5-digit, 5-digit, 5-digit scheme, 3-digit, and SCF sacks under M920. Low-volume sacks may also consist of a firm bundle(s) when optional 5-digit scheme sortation is performed with mailings prepared in sacks. Low-volume bundles also may be placed on merged 5-digit scheme, 5-digit scheme, merged 5-digit, 5-digit, 5-digit metro, 3-digit, and SCF pallets.

* * * * *

An appropriate amendment to 39 CFR part 111 will be published to reflect these changes.

Neva R. Watson,

Attorney, Legislative.

[FR Doc. 04–17303 Filed 7–28–04; 8:45 am]

BILLING CODE 7710–12–P

POSTAL SERVICE

39 CFR Part 601

Issue 2 of the Purchasing Manual; Incorporation by Reference

AGENCY: Postal Service.

ACTION: Final rule.

SUMMARY: The Postal Service announces the publication of Issue 2 of the Postal Service Purchasing Manual. Issue 2 supersedes previous editions of the Purchasing Manual, and is incorporated by reference in the Code of Federal Regulations.

DATES: *Effective Date:* This final rule is effective on July 29, 2004. The incorporation by reference of the Purchasing Manual, Issue 2 is approved by the Director of the Federal Register as of July 29, 2004.

FOR FURTHER INFORMATION CONTACT: Michael J. Harris (202) 268–5653.

SUPPLEMENTARY INFORMATION: Issue 1 of the Purchasing Manual was issued on January 31, 1997, as the successor to former USPS Publication 41, the U.S. Postal Service Procurement Manual. At that time, purchasing organizations were advised that, pending the updating of contract-writing systems, the purchasing organizations could determine, subject to specific limitations, when and to what extent they may adopt its policies and procedures. The Purchasing Manual then became fully effective on January 27, 2000.

Subsequently, Issue 2 of the Purchasing Manual was issued on January 31, 2002. Pending the updating of purchasing support systems for consistency with the new policies contained in Issue 2, purchasing organizations were advised that they might adopt the policies and procedures contained in Issue 2 immediately, or might continue to follow the policies and procedures contained in Issue 1. If a purchasing organization adopted Issue 2 policies and procedures for any category or categories of purchases, it would be required to use those policies and procedures consistently for that category or categories, and not revert to previous policies and procedures. Contracting officers were required to ensure that solicitations and other purchasing documents made prospective offerors fully aware of the authority (Issue 2 or Issue 1, as revised through November 15, 2001) pursuant to which an individual purchase was made. Particular care was required that previous versions of provisions and clauses were not used in purchases made under the policies and procedures of Issue 2, and vice versa. To date, the Postal Service has not formally transitioned from PM Issue 1 to PM Issue 2 primarily because of problems in updating purchasing support systems for consistency with the new policies contained in Issue 2. The end of this transition period will be announced in the **Federal Register**.

The Purchasing Manual is published and available to all users on the World Wide Web at *http://www.usps.com/business*, and contains the Postal Service's purchasing policy.

It will be noted that on March 24, 2004 (69 FR 13786), the Postal Service published a proposed rule in the **Federal Register** entitled ''Purchasing of Property and Services''. In this document, the Postal Service proposed to amend its regulations in order to implement the acquisition portions of its *Transformation Plan* (April 2000) and the similar recommendations of the President's Commission on the United States Postal Service (July 2003) as they relate to the acquisition of property and services. That earlier, ongoing rulemaking is proceeding separately and independently, and should not be considered to be a part of this current notice.

On June 28, 2004 (69 FR 36018), the Postal Service published in the **Federal Register** a detailed discussion of the

policy changes and other major features contained in Issue 1 of the Purchasing Manual. The following is a similar discussion of the policy changes and other significant changes contained in Issue 2 of the Purchasing Manual.

Purchasing Manual Issue 2—Major Policy Changes

Overview: Issue 2 of the Postal Service Purchasing Manual (PM) contains a number of major policy changes. These major changes are centered on the Postal Service's continuing efforts (1) To reflect the best practices of the private and public sectors, (2) to streamline the purchasing process and ensure it concentrates on furthering the business and competitive interests of the Postal Service, and (3) to provide a policy structure that furthers the Postal Service's use of supply chain management business practices. Issue 2 also contains the cumulative changes made to Issue 1 of the Purchasing Manual between January 31, 1997, and January 31, 2002. A discussion of all significant changes contained in Issue 2 is available to all users on the World Wide Web at *http://www.usps.com/business.*

Supply Chain Management: Supply chain management is a business philosophy that concentrates on analyzing the purchasing process and the supply stream in order to increase customer satisfaction and lower overall cost. It involves a number of business practices, including close coordination between end-users, buyers and suppliers, long-term contracts, and ongoing analysis and improvement of operating and administrative processes. With the issuance of PM Issue 1, the Postal Service began to make many of these practices a central part of its purchasing policies; that foundation has been built upon and is reflected throughout Issue 2. The supply chain management philosophy and its importance to Postal Service purchasing is discussed in a new section 3.1.2. Additionally, new text has been added to section 3.1.1 addressing the fact that some Postal Service-supplier relationships are closer and more interdependent than others, based upon the impact the relationship has or may have on the Postal Service's business and competitive interests.

Establishment of Standard Solicitation Provisions and Clauses: PM Issue 1 established a single, streamlined purchasing process modeled on private sector business practices while maintaining the Postal Service's commitment to the accountability and fairness expected of a public institution. To further this continuing objective, PM Issue 2 establishes basic solicitation provisions and contract clauses that may be modified, added to or supplemented as required by the particular purchase. These provisions (Provisions 4–1, Standard Solicitation Provisions, 4–2, Evaluation, and 4–3, Representation and Certifications) and clauses (Clauses 4–1, General Terms and Conditions and 4–2, Contract Terms and Conditions Required to Implement Policies, Statutes, or Executive Orders) are based on and replace the commercial-purchasing provisions and clauses in PM Issue 1. With their establishment as the basic contractual documentation, the need for a specific commercial purchasing process has been obviated. The new provisions and clauses are contained in Appendices A, Solicitations, and B, Contract Clauses, and their use is discussed in the appendices and in 4.2.2.e, Solicitation Provisions, and 4.2.7, Contract Clauses.

Prescriptions for Use of Provisions and Clauses: The provisions and clauses noted above incorporate by reference a number of other provisions and clauses that are: (1) Required by Postal Service policy (such as the Postal Service's preference for domestic supplies or construction materials); (2) required by law (such as the Service Contract Act and the Davis-Bacon Act); or applicable by Executive Order (such as Equal Employment Opportunity). In some cases, these incorporations are included in the basic provision or clause, and in others they are incorporated when checked-off by the contracting officer in light of the particular purchase. This modular approach to solicitation and contract formation ensures that contractual documentation remains simple and streamlined while also ensuring that the Postal Service continues to meet its policy, legislative, and other mandates. At the same time, provisions and clauses that address other aspects of the purchasing process, such as contract type, have been left available to contracting officers to use when their terms and conditions match the needs of the particular purchase. This means that there are a number of subjects in the basic provisions and clauses that may be replaced by more effective terms and conditions, and that the provision and clause prescriptions throughout PM Issue 2 allow contracting officers to make such additions and replacements as they feel necessary. Contracting officers have also been given the discretion to modify, add to or supplement provisions and clauses as they see fit, subject to review of assigned counsel.

Purchase Method: A new section 2.1.6, Purchase Method, has been included in PM Issue 2. This section addresses the responsibility of the purchase team to decide during purchase planning and as part of the individual purchase plan whether a purchase should be made competitively or noncompetitively. This section spells-out under what business scenarios the noncompetitive method may best meet the Postal Service's business and competitive interests, and also requires the purchase team to prepare a business case documenting the rationale for the decision. This section also delineates review and approval thresholds for the business case and the purchase. A new section 1.6.1, Business Objectives and Practices, discusses in general how these objectives and practices fit into overall organizational strategy, and there have been ancillary changes in sections 1.6.2, Best Value, and 1.6.3, Competition. PM Issue 1 section 3.5.5, Noncompetitive Purchases, has been deleted.

Publicizing: PM section 3.5.3, Publicizing Purchasing Opportunities, has been retitled Publicizing Purchase Opportunities and Contract Awards. This part has been revised to: (1) Maintain the $1 million publicizing threshold for commercially available goods and services; (2) provide purchase teams the discretion to publicize noncompetitive purchase opportunities when the team determines that such publicizing would improve market research, while at the same time changing the mandatory publicizing threshold for noncompetitive awards from $500,000 to $1 million; (3) encourage purchase teams to publicize other noncompetitive awards (generally over $500,000) when it feels the award holds significant subcontracting opportunities; and (4) encourage the team to publicize other awards when it feels such an announcement would benefit future competition. In addition, previous references to the Commerce Business Daily (CBD) throughout the PM have been replaced by the term ''Governmentwide point of entry (GPE)'' which has replaced the CBD as the means of publicizing purchase opportunities and contract awards.

Appendix A, Solicitations: Appendix A has been revised to reflect the establishment of the basic solicitation provisions discussed above and to address their use. Several provisions included in PM Issue 1 have been deleted due to the subject matter being covered in the new standard provisions or because they were inconsistent with the Postal Service's continuing efforts to streamline purchasing policies and procedures.

Appendix B, Contract Clauses: Appendix B has been revised to reflect the establishment of the basic contract clauses discussed above and to address their use. Several clauses included in PM Issue 1 have been deleted due to the subject matter being covered in the new general clauses or because they were inconsistent with the Postal Service's continuing efforts to streamline purchasing policies and procedures. Commodity-specific clauses used in design and construction, and mail transportation contracts are listed as they were in PM Issue 1.

Appendix C, Contract Format: Appendix C, Forms and Formats, of PM Issue 1, has been replaced by a new Appendix C, Contract Format. This appendix describes the four-part contract format used in Postal Service purchasing.

Purchasing Manual Issue 2—Other Significant Changes

Chapter 1, Authority, Responsibility, and Policy: 1.1.1.c, Applicability (Purchasing Manual), has been revised to reference new Handbooks P–1, General Purchasing Concepts and Practices, P–2, Design and Construction Purchasing Practices, and to provide the Web site where they may be accessed.

1.1.2.b, Purchasing Policy Committee (Responsibility for Purchasing Policy), has been revised to state that the PPC evaluates proposed changes to the PM for the vice president, Purchasing and Materials.

1.1.2.c, Membership, has been revised to add the manager, Supplier Development and Diversity (Purchasing and Materials), and the manager, Materials, to the PPC and to remove the managers, Facilities Program Management, and Supplier Diversity, (Diversity Development).

1.2, Publication and Changes, has been revised as discussed in Major Policy Changes above.

1.3.1.b.1 (Deviations) has been revised to state that replacing text contained in Provisions 4–1, Standard Solicitation Provisions and 4–2, Evaluation, and Clause 4–1, General Terms and Conditions, with another PM provision or clause does not constitute a deviation and does not require review and approval. As a result of this change, previous 1.3.1.b.2 has been deleted.

1.3.2.c, Records (Authorization of Deviations), has been revised to require approval officials to retain copies of approved deviations.

1.4.1.b.4, Required Approvals (Contracting Authority—Vice President, Purchasing and Materials), has been revised to clarify that the subject approvals are the responsibility of the vice president, Purchasing and Materials.

1.4.2, Contracting Officers, has been revised and reorganized for clarity.

1.4.3, Contracting Officer's Representatives, has been revised to reference Management Instruction PM–610–2001–1, Contracting Officer's Representative Program.

1.4.4.b.3(d), Training (Selection), has been revised to state that Level I design and construction contracting officers are required to complete the training courses on Contract Administration, Pricing and Claims, and Introduction to Facilities R&A Contracting.

1.6.1, Business Objectives and Practices, is a new section and has been added as a general statement addressing the primary goal of Postal Service purchasing and the business practices used to further that goal. 1.6.2, Best Value, and 1.6.3, Competition, have been revised to reinforce the new policy discussed in Major Policy Changes above.

1.6.5, Release and Exchange of Information, and 1.6.6, Privacy Protection, have been revised to conform to Postal Service policy regarding privacy protection. As a result of these changes, Clause 1–1, Privacy Protection, has been revised and retitled, Clause 1–7, Nondisclosure of Address Information, has been deleted, and ancillary changes have been made to subparagraphs 4.5.3.c.4 and 4.5.5.f.

1.6.7.c.1, Progress Payments, has been revised to exclude the required approval of the vice president, Finance, when the contract is for architect/engineer and construction management services.

1.6.13, Domestic Preference, replaces previous part 1.7.12, Buy American Policy. The new title is intended to reflect the voluntary aspect of the Postal Service's policy in this area. The titles of the related provisions and clauses have also been changed to reflect the new term.

1.6.13.b.2(c), Domestic End Products, and 1.6.13.b.2(g), Canadian End Products (previous 1.7.13.b.2.(c) and 1.7.13.b.(g)) have been revised to update definitions.

1.6.14, Contracts with Former Postal Service Officers, Executives, and Employees, is a new section that replaces previous 1.7.13. This revision, providing new or revised policies regarding contracts with former employees and the use of personal services contracts, resulted in related changes to 4.5.3, Professional/Technical and Consultant Services, and a new section 4.5.4, Personal Services Contracts. Lastly, this change also resulted in a new Provision 1–5, Proposed Use of Former Postal Service Employees, and a new Clause 1–12, Use of Former Postal Service Employees.

Previous 1.7.14, Year 2000 Compliance, has been deleted as have Clauses 1–12, Year 2000 Warranty—Commercial Items, and 1–13, Year 2000 Warranty—Noncommercial Items.

Previous 1.9.4, Supplier's Statement of Contingent Fees, has been deleted, as has Provision 1–2, Contingent Fee Representation, to conform to current general federal practice. Contingent fees are now addressed in subchapter 1.8.

Chapter 2, Purchase Planning: 2.1.1, The Importance of Purchase Planning, is a new section discussing the central role purchase planning plays in a successful purchase, and the factors that go into effective planning.

2.1.3.a (Purchase Planning) has been revised to further discuss the role of the contracting officer as leader of the purchase team.

2.1.3.b 2(b) (Responsibilities) has been revised to state that the purchasing organization is responsible for gathering and analyzing spend and demand data in order to identify opportunities for strategic sourcing and consolidated purchases. 2.1.3.b.3 is a new subparagraph describing the expertise the materials organization can bring to a purchase team.

2.1.4.a, Importance (Market Research), has been revised to add commodity or industry trends as an important element of successful market research.

2.1.5.b, Elements (Individual Purchase Plans), has been revised to include a statement that effective plans should address the total cost of ownership of the purchase (subparagraph 2.1.5.b.6) and to require that individual purchase plans contain a written description of the purchase method to be used (subparagraph 2.1.5.b.14). See Major Policy Changes above.

2.1.6, Purchase Method, is a new part discussing the manner in which a purchase will be conducted, specifically, whether the purchase will be made competitively or noncompetitively. This part discusses when either method is appropriate, and describes the various business scenarios under which a noncompetitive purchase is most appropriate and the business case required when the noncompetitive method is used. See Major Policy Changes above.

2.1.7.b.5 (Developing Strategies) has been revised to state that, depending on the particular purchase, it is a good business practice to develop supplier selection strategies that invite new and emerging suppliers to compete for Postal Service purchases.

2.1.9.c.2, Past Performance, has been revised to remove supply chain management as a subfactor of past performance and to address it as a more general aspect of past performance as a whole.

2.1.9.c.3, Suppler Capability: Subparagraph 2.1.9.c.3(b)(4), has been revised to require that suppliers have a sound quality control program that complies with solicitation requirements in order to be deemed capable. Subparagraph 2.1.9.c.3(b)(7) has been revised to state that the fact that a supplier is suspended, debarred or otherwise declared ineligible, bars award without regard to the weight assigned to capability as an evaluation factor. Subparagraph 2.1.9.c.3(c)(1) has been revised to state that the Postal Service's list of debarred and suspended suppliers, and GSA's consolidated list of debarred, suspended or declared ineligible suppliers are sources of information for determining that a supplier is capable. Subparagraph 2.1.9.c.3(d) has been revised to include workforce, subcontractors and other resources to be used in contract performance as appropriate subjects of a preaward survey, and Subparagraph 2.1.9.c.3(e) has been revised to require that preaward survey results must be in writing.

2.1.10, Performance Evaluation and Cost/Price Factors, is a new section combining text from previous sections 2.1.7 and 2.1.8.

2.2.1.a Policy (Quality Requirements) has been revised to clarify that the supplier is responsible for providing supplies or services conforming with the requirements of the purchase and for providing reasonable assurance that requirements are met, and that the purchase team is responsible for determining the necessary quality requirements.

2.2.1.b, Quality Assurance Requirements, has been revised to state that the supplier is responsible in most cases for performing necessary inspection and testing and that the Postal Service may opt to perform these functions.

2.2.2.a, Uses (First Article Approval), 2.2.3.b, Delayed Acceptance (Acceptance), and 2.2.5.f, FOB Points (Delivery or Performance Schedule), have been revised for clarity.

2.2.5.h, Using Mail, has been revised to state that contracting officers should consult with a material management specialist when the weight of a consolidated mailing to a single destination exceeds 300 pounds.

2.2.5.i, Packing and Packaging, is a new paragraph stating that, generally, suppliers are expected to use standard packing and packaging practices, but that the purchase team may require more stringent standards when needed.

2.2.10.d, Noncompetitive Purchases (Value Engineering), has been revised to state the conditions under which a contracting officer may negotiate a noncompetitive contract or contract modification incorporating a change proposal.

2.4.6.e, Ordering (Indefinite Delivery Contracts), and 2.4.6, Provisions, have been revised as was discussed In Postal Bulletin 22037 (11/16/00).

2.4.7.b, Limitations (Ordering Agreements), has been revised to require the periodic—rather than annual—review of ordering agreements extending more than one year.

Chapter 3, Supplier Relations: 3.1.1, General (Policy), has been revised to address the fact that the nature of the partnership between the Postal Service and a given supplier will depend on the potential impact of the supplier's performance on the Postal Service's competitive and financial position. See Major Policy Changes above.

3.1.2, Supply Chain Management, is a new part discussing the Postal Service's use of this business philosophy. See Major Policy Changes above.

3.2.2a, Definition (Sourcing), has been revised to provide a clearer definition of this business practice.

3.2.2.c, Assistance (Sourcing), has been revised to direct purchase teams to Supplier Development and Diversity (Purchasing and Materials), when they need sourcing assistance.

3.2.3, Subcontracting with Small, Minority, and Woman-owned Businesses, has been revised to help the Postal Service more fully realize the benefit of a supplier base that reflects the diversity of the American supplier community. 3.2.3.d.1, Contracts Valued at $1 Million or More, has been revised in subparagraph b to state that Clause 3–1, Small, Minority, and Woman-owned Business Subcontracting Requirements, need not be included in subject contracts when the contract is an indefinite delivery contract or ordering agreement and the purchase team has determined that requiring a subcontracting plan would not be feasible. In addition, 3.2.3.d.2, Contracts Valued at $500,000 or More, has been revised to require the inclusion of Clause 3–2, Participation of Small, Minority, and Woman-owned Businesses, in design and construction contracts valued at $250,000 or more.

3.3.2, Existing Assets, has been revised to redefine this term, and to illustrate when they should be considered in lieu of new purchases. 3.3.5, Defense Energy Support Center, has been revised to provide the new name of this organization (previously called the Defense Fuel Supply Center).

3.5.1, Policy (Commercial Suppliers), has been revised to emphasize that, except for commodities available from mandatory sources, it is Postal Service policy to purchase goods and services from commercial suppliers using the business practices and terms and conditions customary to the commercial marketplace, or to purchase goods and services from the nonmandatory government sources in 3.4.

3.5.2.a, Policy (Prequalification), has been revised for clarity.

3.5.2.b.3 (General) has been revised to clarify the rules concerning prequalification and noncompetitive purchases.

3.5.2.b.4 (General) has been revised to state that during the prequalification process suppliers should be evaluated in the same manner as for any other purchase.

3.5.3, Publicizing Purchasing Opportunities and Contract Awards, is new and replaces PM Issue 1, 3.5.3, Publicizing Purchase Opportunities. See Major Policy Changes above.

3.5.4, Unsolicited Proposals, has been revised to direct readers to Publication 131, The Postal Service Unsolicited Proposal Program, for information regarding the submission and processing of unsolicited proposals.

3.7, Debarment, Suspension, and Ineligibility, has been revised to: (1) Provide a new definition of ''Ineligible Suppliers''; (2) discuss the handling of the Postal Service's and the General Services Administration's lists of debarred and suspended suppliers; (3) require contracting officers to review the Postal Service's and GSA's lists before making a contract award; and (4) discuss the treatment of suppliers on the Postal Service's list.

Chapter 4, Purchasing: 4.1, Policy, has been revised to discuss in general the purchasing process and the basic terms and conditions used in Postal Service purchases.

4.2.2.b, Types (Solicitations), has been revised to discuss the use of written and oral solicitations and to state that the use of Form 8203, Order/Solicitation/Offer/Award, or equivalent, should be used as the request for proposal and subsequent award.

4.2.2.e, Solicitation Provisions, has been revised as discussed in Major Policy Changes above.

4.2.2.g, Availability of Solicitations, has been revised to state that requests for copies of solicitations may be denied once a reasonable number of copies have been distributed to the solicited

suppliers and others who have requested them.

4.2.6.a (Contract Award) has been revised to state that contract award is made by the execution of a contract by both parties or by written acceptance of or performance against a purchase order.

4.2.7, Contract Clauses, is a new part discussing the new basic clauses (4–1, General Terms and Conditions, and 4–2, Contract Terms and Conditions Required to Implement Policies, Statutes, or Executive Orders) and their use. See Major Policy Changes above.

4.5.5.a.5, Information Technology (Definitions), has been revised and a new subparagraph 4.5.5.a.7, Undue Burden, has been added to align Postal Service policies and procedures regarding information technology accessibility with the approaches taken by other federal agencies. Paragraph 4.5.5.b.2 has been revised, and a new Clause 4–18, Information Technology Accessibility Standards, has been added to Appendix B, Contract Clauses.

4.5.5.d.2, General Services Administration (Sources—Information Technology), has been revised to provide new addresses, including an Internet address, for information regarding GSA contracts for information technology.

Previous subparagraph 4.6.5.b.3, Year 2000 Compliance, has been deleted.

Chapter 5, Contract Pricing: 5.2.5.a.13 (Unallowable Costs) is a new subparagraph and has been added to delineate a new category of unallowable costs: legal costs related to a defense against a Postal Service claim or appeal and legal costs related to the prosecution of a claim or appeal against the Postal Service.

Chapter 6, Contract Administration: 6.1.1.b, Contracting Officer's Representatives, has been revised to specifically describe what sort of authorities may be delegated to a contracting officer's representative (COR), what must be contained in the COR's appointment letter, and to reference Management Instruction PM–610–2001–1, Contracting Officer's Representative Program.

6.2.1.b.12 (Postaward Orientation) has been deleted in order to reinforce that commercially accepted accounting procedures should be used.

6.2.3.b.2, Other Contracts (Using Suppliers to Monitor Performance), has been revised to allow third parties to perform acceptance in addition to other contract administration responsibilities.

6.2.6.c, Clause (Bankruptcy), has been deleted, as has Clause 6–1, Bankruptcy, as part of the overall effort to reflect common commercial terms and conditions in Postal Service contracts.

6.3.2.b, Responsibility (Acceptance), has been revised to remove the reference to ''another postal employee'' and replace it with ''other party.''

6.3.3, Receiving Reports (Quality Assurance), has been revised to clarify the use of certificates of conformance.

Chapter 7, Bonds, Insurance, and Taxes: 7.1.2.a.5, Amount (Performance and Payment Bonds for Construction Contracts), has been revised to reflect the provisions of the Construction Industry Protection Act of 1999.

7.2.2.c, Automobile Liability Insurance, has been revised to set a new minimum limit of $100,000 per accident for property damage.

Chapter 8, Patents and Data Rights: No significant changes have been made in this Chapter.

Chapter 9, Labor Policies: 9.2.1, Convict Labor (Policy), has been revised to state that the Postal Service may purchase supplies from firms employing persons on parole or probation under the terms of Executive Order 11755.

9.7.3, Preaward Compliance Reviews, has been revised in view of changes to Executive Order 11246, as have Provision 9–4, Preaward Equal Opportunity Compliance Review, and Clause 9–9, Equal Opportunity Preaward Compliance of Subcontracts.

9.10.1, Requirement (Veterans), has been revised to reference the Veterans Employment Opportunities Act of 1999.

Appendix A, Solicitations: This appendix has been revised as discussed in Major Policy Changes above. Provision 1–5, Proposed Use of Former Employees, is new.

Appendix B, Contract Clauses: This appendix has been revised as discussed in Major Policy Changes above. Clause 1–1, Privacy Protection, and Clause 1–12, Use of Former Postal Service Employees, are new clauses as discussed above. Clause 7–4, Insurance, has also been revised to establish new minimum liability coverage for automobile insurance.

Appendix C, Contract Format: This appendix has been changed as discussed in Major Policy Changes above.

Appendix D, Rules of Practice in Proceedings Relative to Debarment and Suspension from Contracting: No changes have been made to this appendix.

Appendix E, Rules of Practice Before the Postal Service Board of Contract Appeals: No changes have been made to this appendix.

Appendix F, Index: This appendix was revised to reflect the changes throughout PM Issue 2.

List of Subjects in 39 CFR Part 601

Government procurement, Incorporation by reference, Postal Service.

■ In view of the considerations discussed above, the Postal Service hereby amends 39 CFR as follows:

PART 601—PURCHASE PROPERTY AND SERVICES

■ 1. The authority citation for part 601 continues to read as follows:

Authority: 5 U.S.C. 552(a); 39 U.S.C. 401, 404, 410, 411, 2008, 5001–5605.

■ 2. Section 601.100 is revised to read as follows:

§ 601.100 Purchasing Manual; incorporation by reference.

(a) Section 552(a) of Title 5, U.S.C., relating to public information requirements of the Administrative Procedure Act, provides in pertinent part that ''* * * matter reasonably available to the class of persons affected thereby is deemed published in the **Federal Register** when incorporated by reference therein with the approval of the Director of the Federal Register.'' In conformity with that provision, with 39 U.S.C. 410(b)(1), and as provided in this part, the U.S. Postal Service hereby incorporates by reference its Purchasing Manual (PM), Issue 2, dated January 31, 2002. The Director of the Federal Register approves this incorporation by reference in accordance with 5 U.S.C. 552(a) and 1 CFR part 51. The PM is available for examination on the World-Wide Web at *http://www.usps.com/business.* You may inspect a copy at the U.S. Postal Service Library, 475 L'Enfant Plaza West SW., Washington, DC 20260–1641, or at the National Archives and Records Administration (NARA). For information on the availability of this material at NARA, call 202–741–6030, or go to: *http://www.archives.gov/federal_register/code_of_federal_regulations/ibr_locations.html.*

(b) The current Issue of the PM is incorporated by reference in paragraph (a) of this section. The successive Issues of the PM are listed in the following table:

Purchasing manual	Date of issuance
Issue 1	January 31, 1997.
Issue 2	January 31, 2002.

■ 3. Section 601.101 is revised to read as follows:

§ 601.101 Effective date.

The provisions of the Purchasing Manual Issue 2, effective January 31,

2002, are applicable with respect to all covered purchasing activities of the Postal Service.

Stanley F. Mires,

Chief Counsel, Legislative.

[FR Doc. 04–16785 Filed 7–28–04; 8:45 am]

BILLING CODE 7710–12–P

ENVIRONMENTAL PROTECTION AGENCY

40 CFR Part 70

[R07–OAR–2004–KS–0001; FRL–7793–6]

Approval and Promulgation of Operating Permits Program; State of Kansas

AGENCY: Environmental Protection Agency (EPA).

ACTION: Direct final rule.

SUMMARY: EPA is announcing approval of a revision to the Kansas Operating Permits Program for the purpose of increasing emission fees for the Title V Operating Permits Program, revising the late fee provisions, and other minor revisions.

On April 22, 2004, the state of Kansas submitted a revision for the purpose of increasing emission fees for the Title V Operating Permits Program. This increase is necessary to offset the reductions in revenues resulting from reductions in emissions, an increase in the assessed indirect costs, and the transfer of fee fund interest to the general fund. The proposed increase is for major stationary sources for the years 2003 and beyond.

The late fee payment provision is revised with specific language that indicates that failure to pay within 10 calendar days after the department's written notification that the emissions fees were not received will result in continuation of the late fee.

Minor revisions are detailed in the Technical Support Document that is a part of the EPA's electronic public docket listed later in this document.

DATES: This direct final rule will be effective September 27, 2004, without further notice, unless EPA receives adverse comment by August 30, 2004. If adverse comment is received, EPA will publish a timely withdrawal of the direct final rule in the **Federal Register** informing the public that the rule will not take effect.

ADDRESSES: Submit your comments, identified by Regional Material in EDocket (RME) ID Number R07–OAR–2004–KS–0001, by one of the following methods:

1. Federal eRulemaking Portal: *http://www.regulations.gov.* Follow the on-line instructions for submitting comments.

2. Agency Web site: *http://docket.epa.gov/rmepub/.* RME, EPA's electronic public docket and comment system, is EPA's preferred method for receiving comments. Once in the system, select ''quick search;'' then key in the appropriate RME Docket identification number. Follow the on-line instructions for submitting comments.

3. E-mail: *hamilton.heather@epa.gov.*

4. Mail: Heather Hamilton, Environmental Protection Agency, Air Planning and Development Branch, 901 North 5th Street, Kansas City, Kansas 66101.

5. Hand Delivery or Courier. Deliver your comments to Heather Hamilton, Environmental Protection Agency, Air Planning and Development Branch, 901 North 5th Street, Kansas City, Kansas 66101.

Instructions: Direct your comments to RME ID No. R07-OAR–2004-KS–0001. EPA's policy is that all comments received will be included in the public docket without change and may be made available online at *http://docket.epa.gov/rmepub/*, including any personal information provided, unless the comment includes information claimed to be Confidential Business Information (CBI) or other information whose disclosure is restricted by statute. Do not submit information that you consider to be CBI or otherwise protected through RME, regulations.gov, or e-mail. The EPA RME Web site and the Federal regulations.gov Web site are ''anonymous access'' systems, which means EPA will not know your identity or contact information unless you provide it in the body of your comment. If you send an e-mail comment directly to EPA without going through RME or regulations.gov, your e-mail address will be automatically captured and included as part of the comment that is placed in the public docket and made available on the Internet. If you submit an electronic comment, EPA recommends that you include your name and other contact information in the body of your comment and with any disk or CD–ROM you submit. If EPA cannot read your comment due to technical difficulties and cannot contact you for clarification, EPA may not be able to consider your comment. Electronic files should avoid the use of special characters, any form of encryption, and be free of any defects or viruses.

Docket: All documents in the electronic docket are listed in the RME index at *http://docket.epa.gov/rmepub/.* Although listed in the index, some information is not publicly available, *i.e.*, CBI or other information whose disclosure is restricted by statute. Certain other material, such as copyrighted material, is not placed on the Internet and will be publicly available only in hard copy form. Publicly available docket materials are available either electronically in RME or in hard copy at the Environmental Protection Agency, Air Planning and Development Branch, 901 North 5th Street, Kansas City, Kansas 66101. The Regional Office's official hours of business are Monday through Friday, 8 to 4:30 excluding Federal holidays. The interested persons wanting to examine these documents should make an appointment with the office at least 24 hours in advance.

FOR FURTHER INFORMATION CONTACT: Heather Hamilton at (913) 551–7039, or by e-mail at *hamilton.heather@epa.gov.*

SUPPLEMENTARY INFORMATION: Throughout this document whenever ''we,'' ''us,'' or ''our'' is used, we mean EPA. This section provides additional information by addressing the following questions:

What is the Part 70 Operating Permits Program?
What is being addressed in this document?
What action is EPA taking?

What Is the Part 70 Operating Permits Program?

The Clean Air Act (CAA) Amendments of 1990 require all states to develop operating permits programs that meet certain Federal criteria. In implementing this program, the states are to require certain sources of air pollution to obtain permits that contain all applicable requirements under the CAA. One purpose of the Part 70 operating permits program is to improve enforcement by issuing each source a single permit that consolidates all of the applicable CAA requirements into a Federally enforceable document. By consolidating all of the applicable requirements for a facility into one document, the source, the public and the permitting authorities can more easily determine what CAA requirements apply and how compliance with those requirements is determined. Sources required to obtain an operating permit under this program include: ''major'' sources of air pollution and certain other sources specified in the CAA or in EPA's implementing regulations. Revisions to the state operating permits program are subject to public notice, comment, and EPA approval.

What Is Being Addressed in This document?

The state of Kansas has requested a revision to the Operating Permits Program for the purpose of increasing emission fees for the Title V Operating Permits Program, revising the late fee provision, and other minor revisions. These revisions are made to Kansas Administrative Regulations 28–19–202.

The emission fee increase is necessary to offset the reductions in revenues resulting from reductions in emissions, an increase in the assessed indirect costs, and the transfer of fee fund interest to the general fund. The proposed increase is for major stationary sources for the years 2003 and beyond.

The late fee provision is revised with specific language that indicates that failure to pay within 10 calendar days after the department's written notification that the emissions fees were not received will result in continuation of the late fee. The late fee will be $10 per day or .05% of the annual emissions fee per day, whichever is greater and will be paid in addition to the late fee of $100.00 or 1% of the annual emissions fee, whichever is greater.

The minor revisions are addressed in the Technical Support Document that is a part of the EPA's electronic public docket listed previously in this document.

What Action Is EPA Taking?

EPA is approving Kansas' revision of its Operating Permits Program. We are processing this revision to the Kansas Operating Permits Program as a direct final action because the revision makes routine changes to the existing rules which are noncontroversial. This revision will update the Kansas Air Quality Regulations, 28–19–202, to include an increase in annual emissions fees from $20.00 to $25.00 per ton for emissions occurring in the year 2003 and later, a revision to the late fee provisions, and other minor changes as outlined in the Technical Support Document that is a supplemental document to this rulemaking. This rule became effective on January 30, 2004. We do not anticipate any adverse comments. Please note that if EPA receives adverse comment on part of this rule and if that part can be severed from the remainder of the rule, EPA may adopt as final those parts of the rule that are not the subject of an adverse comment.

Statutory and Executive Order Reviews

Under Executive Order 12866 (58 FR 51735, October 4, 1993), this action is not a ''significant regulatory action'' and therefore is not subject to review by the Office of Management and Budget. For this reason, this action is also not subject to Executive Order 13211, ''Actions Concerning Regulations That Significantly Affect Energy Supply, Distribution, or Use'' (66 FR 28355, May 22, 2001). This action merely approves state law as meeting Federal requirements and imposes no additional requirements beyond those imposed by state law. Accordingly, the Administrator certifies that this rule will not have a significant economic impact on a substantial number of small entities under the Regulatory Flexibility Act (5 U.S.C. 601 *et seq.*). Because this rule approves pre-existing requirements under state law and does not impose any additional enforceable duty beyond that required by state law, it does not contain any unfunded mandate or significantly or uniquely affect small governments, as described in the Unfunded Mandates Reform Act of 1995 (Pub. L. 104–4).

This rule also does not have tribal implications because it will not have a substantial direct effect on one or more Indian tribes, on the relationship between the Federal Government and Indian tribes, or on the distribution of power and responsibilities between the Federal Government and Indian tribes, as specified by Executive Order 13175 (65 FR 67249, November 9, 2000). This action also does not have Federalism implications because it does not have substantial direct effects on the States, on the relationship between the national government and the States, or on the distribution of power and responsibilities among the various levels of government, as specified in Executive Order 13132 (64 FR 43255, August 10, 1999). This action merely approves a state rule implementing a Federal standard, and does not alter the relationship or the distribution of power and responsibilities established in the CAA. This rule also is not subject to Executive Order 13045, ''Protection of Children from Environmental Health Risks and Safety Risks'' (62 FR 19885, April 23, 1997), because it is not economically significant.

In reviewing state operating permits programs submitted pursuant to Title V of the CAA, EPA will approve state programs provided that they meet the requirements of the CAA and EPA's regulations codified at 40 CFR part 70. In this context, in the absence of a prior existing requirement for the state to use voluntary consensus standards (VCS), EPA has no authority to disapprove a state operating permits program for failure to use VCS. It would thus be inconsistent with applicable law for EPA, when it reviews an operating permit program submission, to use VCS in place of a state program that otherwise satisfies the provisions of the CAA. Thus, the requirements of section 12(d) of the National Technology Transfer and Advancement Act of 1995 (15 U.S.C. 272 note) do not apply. This rule does not impose an information collection burden under the provisions of the Paperwork Reduction Act of 1995 (44 U.S.C. 3501 *et seq.*).

The Congressional Review Act, 5 U.S.C. 801 *et seq.*, as added by the Small Business Regulatory Enforcement Fairness Act of 1996, generally provides that before a rule may take effect, the agency promulgating the rule must submit a rule report, which includes a copy of the rule, to each House of the Congress and to the Comptroller General of the United States. EPA will submit a report containing this rule and other required information to the U.S. Senate, the U.S. House of Representatives, and the Comptroller General of the United States prior to publication of the rule in the **Federal Register**. A major rule cannot take effect until 60 days after it is published in the **Federal Register**. This action is not a ''major rule'' as defined by 5 U.S.C. 804(2).

Under section 307(b)(1) of the Clean Air Act, petitions for judicial review of this action must be filed in the United States Court of Appeals for the appropriate circuit by September 27, 2004. Filing a petition for reconsideration by the Administrator of this final rule does not affect the finality of this rule for the purposes of judicial review nor does it extend the time within which a petition for judicial review may be filed, and shall not postpone the effectiveness of such rule or action. This action may not be challenged later in proceedings to enforce its requirements. (See section 307(b)(2).)

List of Subjects in 40 CFR Part 70

Environmental protection, Administrative practice and procedure, Air pollution control, Intergovernmental relations, Operating permits, Reporting and recordkeeping requirements.

Dated: July 14, 2004.

U. Gale Hutton,

Acting Regional Administrator, Region 7.

■ Chapter I, title 40 of the Code of Federal Regulations is amended as follows:

PART 70—[AMENDED]

■ 1. The authority citation for Part 70 continues to read as follows:

Authority: 42 U.S.C. 7401 *et seq.*

Appendix A—[Amended]

■ 2. Appendix A to Part 70 is amended by adding paragraph (c) under Kansas to read as follows:

Appendix A to Part 70—Approval Status of State and Local Operating Permits Programs

* * * * *

Kansas

* * * * *

(c) The Kansas Department of Health and Environment approved this revision to the Kansas Administrative Regulations, 28–19–202, as a revision to the Kansas Title V Operating Permits Program, which became effective on January 30, 2004. This revision was submitted on April 22, 2004. We are approving this program revision effective September 27, 2004.

* * * * *

[FR Doc. 04–17294 Filed 7–28–04; 8:45 am]

BILLING CODE 6560–50–P

ENVIRONMENTAL PROTECTION AGENCY

40 CFR Part 70

[R07–OAR–2004–IA–0002; FRL–7793–8]

Approval and Promulgation of Operating Permits Program; State of Iowa

AGENCY: Environmental Protection Agency (EPA).

ACTION: Direct final rule.

SUMMARY: EPA is announcing approval of a revision to the Iowa Operating Permits Program for the purpose of revising the definition of stationary source categories in the state rule. The revised definition will be consistent with the Federally-approved rules, including the provisions of the New Source Review Program and with EPA's major source definition.

DATES: This direct final rule will be effective September 27, 2004, without further notice, unless EPA receives adverse comment by August 30, 2004. If adverse comment is received, EPA will publish a timely withdrawal of the direct final rule in the **Federal Register** informing the public that the rule will not take effect.

ADDRESSES: Submit your comments, identified by Regional Material in EDocket (RME) ID Number R07–OAR–2004–IA–0002, by one of the following methods:

1. Federal eRulemaking Portal: *http://www.regulations.gov.* Follow the on-line instructions for submitting comments.

2. Agency Web site: *http://docket.epa.gov/rmepub/*. RME, EPA's electronic public docket and comment system, is EPA's preferred method for receiving comments. Once in the system, select ''quick search''; then key in the appropriate RME Docket identification number. Follow the on-line instructions for submitting comments.

3. E-mail: *hamilton.heather@epa.gov.*

4. Mail: Heather Hamilton, Environmental Protection Agency, Air Planning and Development Branch, 901 North 5th Street, Kansas City, Kansas 66101.

5. Hand Delivery or Courier. Deliver your comments to Heather Hamilton, Environmental Protection Agency, Air Planning and Development Branch, 901 North 5th Street, Kansas City, Kansas 66101.

Instructions: Direct your comments to RME ID No. R07–OAR–2004–IA–0002. EPA's policy is that all comments received will be included in the public docket without change and may be made available online at *http://docket.epa.gov/rmepub/,* including any personal information provided, unless the comment includes information claimed to be Confidential Business Information (CBI) or other information whose disclosure is restricted by statute. Do not submit information that you consider to be CBI or otherwise protected through RME, regulations.gov, or e-mail. The EPA RME Web site and the Federal regulations.gov Web site are ''anonymous access'' systems, which means EPA will not know your identity or contact information unless you provide it in the body of your comment. If you send an e-mail comment directly to EPA without going through RME or regulations.gov, your e-mail address will be automatically captured and included as part of the comment that is placed in the public docket and made available on the Internet. If you submit an electronic comment, EPA recommends that you include your name and other contact information in the body of your comment and with any disk or CD–ROM you submit. If EPA cannot read your comment due to technical difficulties and cannot contact you for clarification, EPA may not be able to consider your comment. Electronic files should avoid the use of special characters, any form of encryption, and be free of any defects or viruses.

Docket: All documents in the electronic docket are listed in the RME index at *http://docket.epa.gov/rmepub/.* Although listed in the index, some information is not publicly available, *i.e.*, CBI or other information whose disclosure is restricted by statute. Certain other material, such as copyrighted material, is not placed on the Internet and will be publicly available only in hard copy form. Publicly available docket materials are available either electronically in RME or in hard copy at the Environmental Protection Agency, Air Planning and Development Branch, 901 North 5th Street, Kansas City, Kansas 66101. The Regional Office's official hours of business are Monday through Friday, 8:00 to 4:30, excluding Federal holidays. The interested persons wanting to examine these documents should make an appointment with the office at least 24 hours in advance.

FOR FURTHER INFORMATION CONTACT: Heather Hamilton at (913) 551–7039, or by e-mail at *hamilton.heather@epa.gov.*

SUPPLEMENTARY INFORMATION: Throughout this document whenever ''we,'' ''us,'' or ''our'' is used, we mean EPA. This section provides additional information by addressing the following questions:

What is the Part 70 operating permits program?

What is being addressed in this document?

What action is EPA taking?

What Is the Part 70 Operating Permits Program?

The Clean Air Act (CAA) Amendments of 1990 require all states to develop operating permits programs that meet certain Federal criteria. In implementing this program, the states are to require certain sources of air pollution to obtain permits that contain all applicable requirements under the CAA. One purpose of the Part 70 operating permits program is to improve enforcement by issuing each source a single permit that consolidates all of the applicable CAA requirements into a Federally-enforceable document. By consolidating all of the applicable requirements for a facility into one document, the source, the public and the permitting authorities can more easily determine what CAA requirements apply and how compliance with those requirements is determined. Sources required to obtain an operating permit under this program include: ''major'' sources of air pollution and certain other sources specified in the CAA or in EPA's implementing regulations. Revisions to the state operating permits program are subject to public notice, comment, and EPA approval.

What Is Being Addressed in This Document?

The state of Iowa has requested a revision to the Operating Permits Program for the purpose of revising the

definition of stationary source categories in the state rule. EPA Region 7 advised the state of Iowa that the Federal definition had been revised to allow states to no longer require owners/operators of industrial facilities to count fugitive emissions of air pollutants not considered toxic in major source determinations, if the sources are in source categories subject to Federal emissions regulations promulgated after August 7, 1980. The state of Iowa acted on this revision and the amended rule (567–22.100(455B)) became effective on January 15, 2003.

The revision will make the definition consistent with the provisions of the New Source Review program and with EPA's major source definition in 40 CFR part 70.

What Action Is EPA Taking?

EPA is approving Iowa's revision of its definition of stationary source categories. We are processing this action as a direct final action because the revisions make routine changes to the existing rules which are noncontroversial. Therefore, we do not anticipate any adverse comments. Please note that if EPA receives adverse comment on part of this rule and if that part can be severed from the remainder of the rule, EPA may adopt as final those parts of the rule that are not the subject of an adverse comment.

Statutory and Executive Order Reviews

Under Executive Order 12866 (58 FR 51735, October 4, 1993), this action is not a ''significant regulatory action'' and therefore is not subject to review by the Office of Management and Budget. For this reason, this action is also not subject to Executive Order 13211, ''Actions Concerning Regulations That Significantly Affect Energy Supply, Distribution, or Use'' (66 FR 28355, May 22, 2001). This action merely approves state law as meeting Federal requirements and imposes no additional requirements beyond those imposed by state law. Accordingly, the Administrator certifies that this rule will not have a significant economic impact on a substantial number of small entities under the Regulatory Flexibility Act (5 U.S.C. 601 *et seq.*). Because this rule approves pre-existing requirements under state law and does not impose any additional enforceable duty beyond that required by state law, it does not contain any unfunded mandate or significantly or uniquely affect small governments, as described in the Unfunded Mandates Reform Act of 1995 (Pub. L. 104–4).

This rule also does not have tribal implications because it will not have a substantial direct effect on one or more Indian tribes, on the relationship between the Federal Government and Indian tribes, or on the distribution of power and responsibilities between the Federal Government and Indian tribes, as specified by Executive Order 13175 (65 FR 67249, November 9, 2000). This action also does not have Federalism implications because it does not have substantial direct effects on the States, on the relationship between the national government and the States, or on the distribution of power and responsibilities among the various levels of government, as specified in Executive Order 13132 (64 FR 43255, August 10, 1999). This action merely approves a state rule implementing a Federal standard, and does not alter the relationship or the distribution of power and responsibilities established in the CAA. This rule also is not subject to Executive Order 13045, ''Protection of Children from Environmental Health Risks and Safety Risks'' (62 FR 19885, April 23, 1997), because it is not economically significant.

In reviewing state operating permits programs submitted pursuant to Title V of the CAA, EPA will approve state programs provided that they meet the requirements of the CAA and EPA's regulations codified at 40 CFR part 70. In this context, in the absence of a prior existing requirement for the state to use voluntary consensus standards (VCS), EPA has no authority to disapprove a state operating permits program for failure to use VCS. It would thus be inconsistent with applicable law for EPA, when it reviews an operating permit program submission, to use VCS in place of a state program that otherwise satisfies the provisions of the CAA. Thus, the requirements of section 12(d) of the National Technology Transfer and Advancement Act of 1995 (15 U.S.C. 272 note) do not apply. This rule does not impose an information collection burden under the provisions of the Paperwork Reduction Act of 1995 (44 U.S.C. 3501 *et seq.*).

The Congressional Review Act, 5 U.S.C. 801 *et seq.*, as added by the Small Business Regulatory Enforcement Fairness Act of 1996, generally provides that before a rule may take effect, the agency promulgating the rule must submit a rule report, which includes a copy of the rule, to each House of the Congress and to the Comptroller General of the United States. EPA will submit a report containing this rule and other required information to the U.S. Senate, the U.S. House of Representatives, and the Comptroller General of the United States prior to publication of the rule in the **Federal Register**. A major rule cannot take effect until 60 days after it is published in the **Federal Register**. This action is not a ''major rule'' as defined by 5 U.S.C. 804(2).

Under section 307(b)(1) of the Clean Air Act, petitions for judicial review of this action must be filed in the United States Court of Appeals for the appropriate circuit by September 27, 2004. Filing a petition for reconsideration by the Administrator of this final rule does not affect the finality of this rule for the purposes of judicial review nor does it extend the time within which a petition for judicial review may be filed, and shall not postpone the effectiveness of such rule or action. This action may not be challenged later in proceedings to enforce its requirements. (*See* section 307(b)(2).)

List of Subjects in 40 CFR Part 70

Environmental Protection, Administrative practice and procedure, Air pollution control, Intergovernmental relations, Operating permits, Reporting and recordkeeping requirements.

Dated: July 14, 2004.

U. Gale Hutton,

Acting Regional Administrator, Region 7.

■ Chapter I, title 40 of the Code of Federal Regulations is amended as follows:

PART 70—[AMENDED]

■ 1. The authority citation for Part 70 continues to read as follows:

Authority: 42 U.S.C. 7401 *et seq.*

Appendix A—[Amended]

■ 2. Appendix A to Part 70 is amended by adding paragraph (g) under Iowa to read as follows:

Appendix A to Part 70—Approval Status of State and Local Operating Permits Programs

* * * * *

Iowa

* * * * *

(g) The Iowa Department of Natural Resources submitted for program approval rule 567–22.100(455B) on April 20, 2004. The state effective date is January 15, 2003. We are approving this program revision effective September 27, 2004.

* * * * *

[FR Doc. 04–17297 Filed 7–28–04; 8:45 am]

BILLING CODE 6560–50–P

Proposed Rules

Federal Register
Vol. 69, No. 145
Thursday, July 29, 2004

This section of the FEDERAL REGISTER contains notices to the public of the proposed issuance of rules and regulations. The purpose of these notices is to give interested persons an opportunity to participate in the rule making prior to the adoption of the final rules.

NATIONAL CREDIT UNION ADMINISTRATION

12 CFR Part 708b

Mergers of Federally-Insured Credit Unions; Voluntary Termination or Conversion of Insured Status

AGENCY: National Credit Union Administration (NCUA).

ACTION: Proposed rule with request for comments.

SUMMARY: The National Credit Union Administration (NCUA) is issuing a proposed rule on credit union mergers, federal share insurance terminations, and conversions from federal share insurance to nonfederal insurance. The proposed rule establishes communication and disclosure requirements to ensure that members are fully and properly informed before they vote on whether to convert from federal insurance to nonfederal insurance. The proposed rule provides protections to members who may lose federal insurance because they have large insured accounts at two federally-insured credit unions that are merging or they have term accounts at a federally-insured credit union that is converting to nonfederal insurance. The proposal also requires merging credit unions to analyze the premerger requirements imposed on credit unions by the Hart-Scott-Rodino Act and provides other miscellaneous updates to the existing rule governing credit union mergers, terminations, and conversions of share insurance.

DATES: Comments must be received on or before September 27, 2004.

ADDRESSES: You may submit comments by any of the following methods (Please send comments by one method only):

- Federal eRulemaking Portal: *http://www.regulations.gov.* Follow the instructions for submitting comments.
- NCUA Web Site: *http://www.ncua.gov/news/proposed_regs/proposed_regs.html.* Follow the instructions for submitting comments.
- E-mail: Address to *regcomments@ncua.gov.* Include ''[Your name] Comments on Proposed Rule Part 708b (Mergers and Termination or Conversion of Insured Status)'' in the e-mail subject line.
- Fax: (703) 518–6319. Use the subject line described above for e-mail.
- Mail: Address to Becky Baker, Secretary of the Board, National Credit Union Administration, 1775 Duke Street, Alexandria, Virginia 22314–3428.
- Hand Delivery/Courier: Same as mail address.

FOR FURTHER INFORMATION CONTACT: Paul Peterson, Staff Attorney, Office of General Counsel, at the above address or telephone: (703) 518–6540.

SUPPLEMENTARY INFORMATION:

A. Background

The Federal Credit Union Act (Act) authorizes the NCUA Board to prescribe rules regarding mergers of federally-insured credit unions and changes in insured status and requires written approval of the Board before one or more federally-insured credit unions merge or before a federally-insured credit union terminates federal insurance or converts to nonfederal insurance. 12 U.S.C. 1766(a), 1785(b), 1785(c), 1789(a). Part 708b of NCUA's rules addresses the merger of federally-insured credit unions and the voluntary termination or conversion of federally-insured status. 12 CFR part 708b.

The Board last made significant changes to part 708b in 1987. 52 FR 12370 (April 16, 1987). The Board has a policy of continually reviewing NCUA regulations to ''update, clarify and simplify existing regulations and eliminate redundant and unnecessary provisions.'' NCUA Interpretive Ruling and Policy Statement (IRPS) 87–2, Developing and Reviewing Government Regulations. As a result of the NCUA's 2003 review, the Board determined that part 708b should be updated and modernized.

B. Proposed Amendments

1. Amendment Related to Hart-Scott-Rodino Act

The Hart-Scott-Rodino Act (HSR Act), codified at 15 U.S.C. 18a, requires that parties, including credit unions, to certain mergers or acquisitions notify the Federal Trade Commission (FTC) before consummating the merger or acquisition. This premerger notification, or ''HSR filing,'' enables the FTC and the U.S. Department of Justice to determine which mergers are likely to be anticompetitive and challenge them under the antitrust laws before they are finalized. Credit unions that file must pay the FTC a substantial fee ranging from $45,000 up to $280,000.

Only mergers involving relatively large credit unions require HSR filings because merging entities that are below a certain asset size are exempt. Generally, credit unions need not file if 1) the merging credit union has less than $50 million in assets or 2) the merging credit union has from $50 million up to $200 million in assets and the continuing credit union is below a certain asset size established by the FTC. *See* Introductory Guide II to the Premerger Notification Program, To File or Not to File (Premerger Notification Office, Bureau of Competition, U.S. Federal Trade Commission, January 2002).

The proposed amendment requires a merging credit union that has more than $50 million in assets as reported on its last call report to inform NCUA in its merger proposal if the credit union plans to make an HSR filing and, if not, why not. The Board notes that many credit unions with more than $50 million in assets for purposes of call reporting may have some assets that do not count towards the HSR filing thresholds and so the merger may not require HSR filing. Credit unions should consult with private counsel about HSR filing issues.

2. Amendments Related to Share Insurance Disclosure.

Section 151 of the Federal Deposit Corporation Improvement Act of 1991 (FDICIA) added § 43 to the Federal Deposit Insurance Act (FDIA). Pub. L. No. 102–242 (1991), Section 151(a); Pub. L. No. 102–550 (1992), Section 1603(b)(2); and 12 U.S.C. 1831t(b). Section 43 of the FDIA requires, among other things, that depository institutions, including credit unions, that do not have federal deposit or share insurance make conspicuous disclosure of that fact and its potential ramifications to their current and potential account holders in various media. For example, nonfederally-insured institutions must make conspicuous disclosure in all periodic

account statements, on each signature card, and on each passbook, certificate of account, or similar instrument, that ''the institution is not federally-insured, and that if the institution fails, the Federal Government does not guarantee that depositors will get back their money.'' 12 U.S.C. 1831t(b)(1).

In a recent report, the U.S. General Accounting Office (GAO) found that ''many privately insured credit unions have not always complied with the disclosure requirements in Section 43 that are designed to notify consumers that the deposits in these institutions are not federally-insured.'' *Federal Deposit Insurance Act: FTC Best Among Candidates to Enforce Consumer Protection Provisions* (GAO–03–0971, August, 2003), p. 20. As the title of the report suggests, GAO concluded that FTC is the most appropriate federal agency to enforce the provisions of § 43 with respect to nonfederally-insured credit unions. NCUA does have a responsibility, however, to ensure that members of a federally-insured credit union are fully informed in connection with a vote to terminate federal insurance or to convert from federal to nonfederal insurance and that management understands and is committed to fulfilling its disclosure requirements post-conversion. *See* 12 U.S.C. 1785(c)(5). Accordingly, the proposed amendments revise the disclosure requirements in connection with the membership vote of credit unions seeking to terminate or convert from federal insurance and require the credit unions to acknowledge section 43 and certify that they will comply with its requirements following termination or conversion.

Federally-insured credit unions intending to terminate federal insurance or convert to non-federal insurance must first obtain approval from their members, and part 708b currently requires credit unions to use certain language to disclose to members, as part of the notification of member vote, the effects of insurance termination or conversion. The current disclosure language required by part 708b is similar to that required by section 43 following the loss of federal insurance. The proposed amendments modify the part 708b disclosures to make them more consistent with the section 43 disclosures.

The proposed amendments also update the form notices, ballots, and certifications in subpart C of part 708b. The Board intends that credit unions desiring to convert must use the forms in subpart C unless the Regional Director approves the use of alternative forms.

Although the current rule has forms for both insurance conversions and terminations, the proposal drops the termination forms. The Board understands that, currently, no states will permit an insured credit union to voluntarily terminate its share insurance. The proposed regulation will continue to specify the essential requirements for a termination, but the Board feels that specific regulatory forms covering terminations are unnecessary.

3. Other Amendments Related to Insurance Conversions and Terminations

a. Timing and Sequence of the Approval Process

Currently, part 708b requires that NCUA must approve a merger before the members vote to approve the merger. By contrast, for insurance conversions, part 708b provides two options as to when a credit union must give notice: ''[n]otice to the Board may be given when membership approval is solicited, or after membership approval is obtained.'' *Compare* 12 CFR 708b.106(a)(1)(mergers) *with* 708b.203(c)(conversions). These different provisions may create confusion in mergers that also involve insurance conversions. NCUA proposes to eliminate this confusion by changing the notice requirement for insurance conversions to require a converting credit union to notify NCUA and request approval of the conversion before the credit union solicits a member vote. This change is consistent with the only timing requirement imposed by the Act, which is that NCUA be notified at least 90 days before the intended date of conversion. 12 U.S.C. 1786(a)(2).

b. Right To Redeem Term Share Accounts Without Penalty

The proposed rule requires, as part of the conversion process, that a credit union notify its members in the notice of member vote that, if the conversion is approved, it will permit members to close share certificate and other term accounts without penalty if done before the effective date of conversion. During one recent insurance conversion, NCUA received inquiries from some members of the converting credit union as to whether they could close term accounts without suffering an early withdrawal penalty. As a matter of policy, it is unfair to force credit union members to maintain term accounts after the loss of federal share insurance. As a matter of contract law, the credit union's term account contract may also require the continuation of federal account insurance as an express or implied condition.

The Board does not deem a similar provision allowing members to close term accounts without penalty as appropriate in insurance termination situations. In insurance termination situations, federal insurance may continue for up to a year after the date of termination; while in insurance conversion situations, federal insurance is lost completely on the date of conversion. *See* 12 U.S.C. 1786(c).

c. Communications to Members

The Board proposes to amend the current rule to modify the current requirement for Regional Director approval of certain written communications to members about insurance terminations or conversions. Currently, part 708b requires credit unions to use specific language in the notice to members of the pending change in insurance status and associated ballot. 12 CFR part 708b, subpart C. It also requires the approval of the Regional Director for any modifications to this language and any additional communications concerning insurance coverage included with the notice or ballot. 12 CFR 708b.303. The purpose of this approval requirement is to ensure that members are accurately informed about the ramifications of the loss of federal insurance coverage. The current approval requirement, however, does not extend to communications outside those included with the notice and ballot, such as separate mailings, e-mails, or postings on the world-wide web.

The Board is concerned about communications that credit unions may make that are intended to influence the member vote. While a credit union seeking to convert or terminate may make its case for conversion or termination to its members, it may not do so by misleading, inaccurate, or deceptive representations. For example, the Board believes that any discussion of NCUA insurance, or any comparison of nonfederal insurance to NCUA insurance, is inaccurate and deceptive if it fails to mention the most important aspect of NCUA insurance: by law, it is backed by the full faith and credit of the United States government. Competitive Equality Banking Act of 1987, Pub. L. No. 100–86, Section 901, 101 Stat. 657 (1987); *Massachussetts Credit Union Share Insurance Corporation* v. *National Credit Union Administration,* 693 F.Supp. 1225, 1230–31 (D.C.D.C. 1988) (''The Court concludes that it was the clear and unambiguous intention of the Congress to guarantee the resources

of * * * depository institutions with the full faith and credit of the United States.''). The Board is also concerned about representations that state or imply that it is difficult or impossible to structure accounts at a federally-insured institution to obtain more than $100,000 of share insurance coverage as these representations are also inaccurate and deceptive. The Board is proposing multiple amendments to address these member communications issues.

The Board is proposing to amend the current rule to clarify the concept of ''notice.'' Part 708b currently provides that when the board of directors of a federally-insured credit union adopts a resolution proposing to convert from federal to nonfederal insurance, including an insurance conversion associated with a merger or conversion of charter, it must provide its members with written notice of the proposal to convert insurance and of the date set for the membership vote. To ensure that the members are adequately informed about the nature of the insurance conversion, both the current and proposed rules prescribe specific forms for this notice. The proposed rule makes clear that the first written communication following the resolution to convert that is made by or on behalf of the credit union and that informs the members that the credit union will seek conversion of insurance is, in fact, the notice of the proposal to convert and must be in the prescribed form unless the Regional Director approves a different form.

The proposed rule will also place approval and disclosure requirements on ''share insurance communications,'' defined in the proposed rule as any written communication, that: is made by or on behalf of a federally-insured credit union; is intended to be read by two or more credit union members; and mentions share insurance conversion or termination. The term covers communications delivered or made available before, during, and after the credit union board of directors decides to seek conversion or termination. The term includes, but is not limited to, communications delivered or made available by mail, e-mail, and internet website posting.

The current rule requires prior Regional Director approval of any ''[m]odifications or additions to the notices or ballot concerning insurance coverage, and any additional communications concerning insurance coverage included with the notices or ballot * * * ''12 CFR 708b.303. The current rule states that the Regional Director may not withhold such approval unless ''it is determined that the credit union, by inclusion or omission of information, would materially mislead or misinform its membership.'' *Id.* The proposed retains the prior approval requirement and the standard of review, but expands the types of communications subject to prior approval. Specifically, the proposed rule requires prior approval for all share insurance communications made during the voting period, including those communications not included with the notices or ballot.

The current rule does not contain any disclosure requirements for communications other than the disclosures contained in the form notice and ballot. The proposed rule, however, requires the inclusion of the following disclosure language, in a conspicuous fashion, in all share insurance communications: ''IF YOU ARE A MEMBER OF THIS CREDIT UNION, YOUR ACCOUNTS ARE CURRENTLY INSURED BY THE NATIONAL CREDIT UNION ADMINISTRATION, A FEDERAL AGENCY. THIS INSURANCE IS BACKED BY THE FULL FAITH AND CREDIT OF THE UNITED STATES GOVERNMENT. IF THE CREDIT UNION (CONVERTS TO PRIVATE INSURANCE)(TERMINATES ITS FEDERAL INSURANCE), AND THE CREDIT UNION FAILS, THE FEDERAL GOVERNMENT DOES NOT GUARANTEE THAT YOU WILL GET YOUR MONEY BACK.''

To make an informed decision about conversion or termination, members must understand the potential repercussions from the loss of federal insurance. This information is so important it must be provided the first time the issue of conversion is raised and every time the issue is discussed. The proposed disclosure language tracks the disclosures required of nonfederally-insured credit unions by section 43(b) of the FDIA after conversion. 12 U.S.C. 1831t(b). The proposal requires this language be included in all share insurance communications whether or not the communication requires prior NCUA approval and whether or not the credit union has made a formal decision to seek conversion or termination. The Board is concerned, for example, about the use of surveys and questionnaires as a vehicle to shape member opinion about conversions before the board of directors formally resolves to convert. The proposed rule also tracks section 43(b) by requiring that the disclosure language be conspicuous. To ensure that the disclosure catches the attention of the member, the disclosure must be in capital letters, bolded, offset from the other text by use of a border, and at least one font size larger than any other text (exclusive of headings) used in the communication. As noted above, the proposed rule defines ''share insurance communication'' to include only those communications intended to be read by two or more members. The proposed rule's disclosure and prior approval requirements do not apply to any communication that is addressed to a single person if the communication is not publicized by, or on behalf of, the credit union, or if the same or substantially the same communication is not otherwise made to more than one member. So, for example, if a member sent an email to a credit union asking for a replacement ballot or seeking more information about the member meeting, the credit union's reply would not require prior Regional Director approval nor would it need to contain the disclosure language.

The Board also proposes to add a cross-reference to § 740.2 of NCUA's advertising regulation, which section prohibits the making of false or deceptive representations. 12 CFR 740.2. This cross-reference does not create any new requirement, but, rather, reminds credit unions of an important preexisting obligation when communicating with members.

d. Eligibility for Nonfederal Insurance

Not all states permit nonfederal primary share insurance. The proposed rule requires, as part of the request for NCUA approval of conversion to nonfederal insurance, that the converting credit union provide proof that the nonfederal insurer is authorized to issue share insurance in the state where the credit union is located and that the insurer will insure the credit union.

e. Voting Procedures

To ensure the integrity of the vote, the proposed rule requires the vote be conducted by secret ballot and be administered by an independent entity. The Board wants all members, including employee-members, to be able to vote in their own best interests free from any pressure. A secret vote administered by an independent entity will eliminate disclosure of early voting returns and pressure on members to vote in a certain way or change previously cast votes.

The proposed rule defines ''independent entity'' as a company with experience in conducting corporate elections. No official or senior manager of the credit union, or the immediate family members of any official or senior manager, may have any ownership interest in, or be employed by, the entity.

4. Miscellaneous Amendments

The Board is proposing an amendment to require notice to members regarding the potential reduction of account insurance coverage resulting from the merger of two federally-insured credit unions. Two credit unions that are proposing to merge may have overlapping fields of membership, and there may be individuals who belong to both credit unions. If these individuals have accounts at both credit unions in an aggregate amount exceeding $100,000, they run the risk of losing some insurance coverage on their accounts as a result of the merger. Last December, NCUA finalized a change to its insurance rules to extend insurance coverage in this situation for up to six months following a merger. 68 FR 75111 (December 30, 2003)(Amendments to 12 CFR part 745). Still, some members may not make the appropriate account adjustments within the six-month window. To ensure these members are aware of the possible loss of coverage, this proposed rule requires the continuing credit union either (1) notify all members of the continuing credit union of the potential loss of insurance coverage from overlapping fields of membership, (2) notify all individuals who are members of both credit unions of the potential loss of insurance coverage, or (3) determine which members of both credit unions may actually have uninsured funds six months after the merger and notify those members of the potential loss of insurance coverage.

The proposed rule clarifies that that the terms ''insurance'' and ''insured'' as used in part 708b refer to primary share or deposit insurance, not to excess insurance.

The proposed rule requires merging credit unions to analyze the net worth of the two credit unions before merger, as calculated under generally accepted accounting principles (GAAP), and compare those figures with the estimated net worth of the continuing credit union after merger. The credit unions must conduct this analysis to determine any negative effects on GAAP net worth resulting from a merger.

The proposed rule also makes other minor changes to modernize the language.

Regulatory Procedures

A. Regulatory Flexibility Act

The Regulatory Flexibility Act requires NCUA to prepare an analysis to describe any significant economic impact a proposed rule may have on a substantial number of small credit unions (those under ten million dollars in assets). Each year, there are about 300 mergers that involve federally-insured credit unions, and about 250 of these mergers involve small credit unions. In almost all cases, however, the small credit union merges into a much larger continuing credit union. The larger credit union is available to assist the small credit union with each step in the merger process, keeping the economic impact on the small credit union to a minimum. Accordingly, the Board does not anticipate that this proposed rule would have a significant economic impact on a substantial number of small credit unions, and, therefore, a regulatory flexibility analysis is not required.

B. Paperwork Reduction Act

Section 708b contains information collection requirements. As required by the Paperwork Reduction Act of 1995 (*44 U.S.C. 3507*(d)), NCUA has submitted a copy of this proposed rule as part of an information collection package to the Office of Management and Budget (OMB) for its review and approval for revision of Collection of Information, Mergers of Federally Insured Credit Unions, Control Number 3133–0024.

The proposed § 708b ensures that NCUA has sufficient information to determine whether to approve the proposed merger, insurance conversion, or insurance termination. The proposed § 708b further ensures that members have sufficient and accurate information to exercise their vote properly concerning the proposed merger, insurance conversion, or insurance termination. The proposed § 708b also protects the property interests of members that may lose some or all of the federal insurance due to a merger, conversion, or termination of insurance.

Mergers

Each year, there are approximately 300 mergers involving one or more federally insured credit unions. NCUA estimates that it will take the two merging credit unions about 25 hours between them to prepare the required merger documents (proposed § 708b.103), to collect and submit the required information to NCUA (proposed § 708b.104), to provide required insurance disclosures if the merger involves a share insurance conversion (proposed § 708b.206), to notify members of the merger and send them the ballot (proposed § 708b.106), to notify NCUA of the merger's completion (proposed § 708b.108), and to notify the members of the results of the merger and the possible effect on their insurance coverage (proposed § 708b.101(e)). Three hundred respondents (the two merging credit unions together treated as one respondent) times 25 hours per respondent equals 7,500 total annual burden hours associated with this collection of information.

Share Insurance Terminations.

Approximately zero credit unions each year engage in share insurance terminations. If one or more credit unions does engage in a voluntary termination of insurance in the future NCUA estimates there will be minimal burden in the form of collections of information on those credit unions. NCUA estimates that it will take each credit union 10 hours to prepare the required termination documents and notice to NCUA (proposed § 708b.201), the notice to members and ballot (proposed § 708b.202), and the required disclosures in other communications that the credit union plans to send to its members (proposed § 708b.206). Zero respondents times 10 hours per respondent equals zero total annual burden hours associated with this collection of information.

Share Insurance Conversions

Approximately three credit unions each year engage in share insurance conversions outside of the merger context. NCUA estimates there will be minimal burden in the form of collections of information, since NCUA provides forms and form language in the regulation and associated manuals. NCUA estimates that it will take each credit union 10 hours to prepare the required conversion documents and notice to NCUA (proposed § 708b.203), the notice to members and ballot (proposed § 708b.204), and the required disclosures in other communications that the credit union plans to send to its members (proposed § 708b.206). Three respondents times 10 hours per respondent equals 30 total annual burden hours associated with this collection of information.

Total annual burden hours = 7,530.

Organizations and individuals desiring to submit comments on the information collection requirements should direct them to the Office of Information and Regulatory Affairs, OMB, Attn: Mark Menchik, Room 10226, New Executive Office Building, Washington, DC 20503.

The NCUA considers comments by the public on this proposed collection of information in—

—Evaluating whether the proposed collection of information is necessary

for the proper performance of the functions of the NCUA, including whether the information will have a practical use;
—Evaluating the accuracy of the NCUA's estimate of the burden of the proposed collection of information, including the validity of the methodology and assumptions used;
—Enhancing the quality, usefulness, and clarity of the information to be collected; and
—Minimizing the burden of collection of information on those who are to respond, including through the use of appropriate automated electronic, mechanical, or other technological collection techniques or other forms of information technology; e.g., permitting electronic submission of responses.

The Paperwork Reduction Act requires OMB to make a decision concerning the collection of information contained in these proposed regulations between 30 and 60 days after publication of this document in the **Federal Register**. Therefore, a comment to OMB is best assured of having its full effect if OMB receives it within 30 days of publication. This does not affect the deadline for the public to comment to the NCUA on the proposed regulations.

C. Executive Order 13132

Executive Order 13132 encourages independent regulatory agencies to consider the impact of their actions on state and local interests. In adherence to fundamental federalism principles, NCUA, an independent regulatory agency as defined in 44 U.S.C. 3502(5), voluntarily complies with the executive order. The proposed rule would not have substantial direct effects on the states, on the connection between the national government and the states, or on the distribution of power and responsibilities among the various levels of government. NCUA has determined that this proposed rule does not constitute a policy that has federalism implications for purposes of the executive order.

D. The Treasury and General Government Appropriations Act, 1999—Assessment of Federal Regulations and Policies on Families

The NCUA has determined that this proposed rule would not affect family well-being within the meaning of § 654 of the Treasury and General Government Appropriations Act, 1999, Pub. L. 105–277, 112 Stat. 2681 (1998).

E. Agency Regulatory Goal

NCUA's goal is to promulgate clear and understandable regulations that impose minimal regulatory burden. We request your comments on whether the proposed rule is understandable and minimally intrusive.

List of Subjects in 12 CFR Part 708b

Credit Unions, Mergers of Credit Unions, Reporting and Recordkeeping Requirements.

By the National Credit Union Administration Board on July 22, 2004.

Becky Baker,

Secretary of the Board.

For the reasons stated above, NCUA proposes to revise 12 CFR part 708b as follows:

PART 708b—MERGERS OF FEDERALLY-INSURED CREDIT UNIONS; VOLUNTARY TERMINATION OR CONVERSION OF INSURED STATUS

Sec.
708b.1 Scope.
708b.2 Definitions.

Subpart A—Mergers 708b.101 Mergers generally.

708b.102 Special provisions for federal insurance.
708b.103 Preparation of merger plan.
708b.104 Submission of merger proposal to the NCUA.
708b.105 Approval of merger proposal by NCUA.
708b.106 Approval of the merger proposal by members.
708b.107 Certificate of vote on merger proposal.
708b.108 Completion of merger.

Subpart B—Voluntary Termination or Conversion of Insured Status

708b.201 Termination of insurance.
708b.202 Notice to members of proposal to terminate insurance.
708b.203 Conversion of insurance.
708b.204 Notice to members of proposal to convert insurance.
708b.205 Modifications to notice.
708b.206 Share insurance communications to members.

Subpart C—Forms

708b.301 Conversion of insurance (State Chartered Credit Union).
708b.302 Conversion of insurance (Federal Credit Union).
708b.303 Conversion of insurance through merger.

Authority: 12 U.S.C. 1766, 1785, 1786, 1789.

§ 708b.1 Scope.

(a) Subpart A of this Part prescribes the procedures for merging one or more credit unions with a continuing credit union where at least one of the credit unions is federally-insured.

(b) Subpart B of this Part prescribes the procedures and notice requirements for termination of federal insurance or conversion of federal insurance to nonfederal insurance, including termination or conversion resulting from a merger.

(c) Subpart C prescribes required forms for use in conversion of federal insurance to nonfederal insurance.

(d) Nothing in this Part restricts or otherwise impairs the authority of the NCUA to approve a merger pursuant to Section 205(h) of the Act.

(e) This Part does not address procedures or requirements that may be applicable under state law for a state credit union.

§ 708b.2 Definitions.

(a) *Continuing credit union* means the credit union that will continue in operation after the merger.

(b) *Convert, conversion,* and *converting,* when used in connection with insurance, refer to the act of canceling federal insurance and simultaneously obtaining insurance from another insurance carrier. They mean that after cancellation of federal insurance the credit union will be nonfederally-insured.

(c) *Federally-insured* means insured by the National Credit Union Administration (NCUA) through the National Credit Union Share Insurance Fund (NCUSIF).

(d) *Independent entity* means a company with experience in conducting corporate elections. No official or senior manager of the credit union, or the immediate family members of any official or senior manager, may have any ownership interest in, or be employed by, the entity.

(e) *Insurance* and *insured* refer to primary share or deposit insurance. These terms do not include excess share or deposit insurance as referred to in Part 740.

(f) *Merging credit union* means the credit union that will cease to exist as an operating credit union at the time of the merger.

(g) *Nonfederally-insured* means insured by a private or cooperative insurance fund or guaranty corporation organized or chartered under state or territorial law.

(h) *Share insurance communication* means any written communication, excluding the form communications in Subpart C of this Part, that is made by or on behalf of a federally-insured credit union, that is intended to be read by two or more credit union members, and that mentions share insurance conversion or termination. The term includes communications delivered or made available before, during, and after the credit union board of directors decides to seek conversion or termination. The

term includes, but is not limited to, communications delivered or made available by mail, e-mail, and internet website posting.

(i) *State credit union* means any credit union organized and operated according to the laws of any state, the several territories and possessions of the United States, or the Commonwealth of Puerto Rico. Accordingly, state authority means the appropriate state or territorial regulatory or supervisory authority for any such credit union.

(j) *Terminate, termination,* and *terminating,* when used in reference to insurance, refer to the act of canceling federal insurance and mean that the credit union will become uninsured.

(k) *Uninsured* means there is no share or deposit insurance available on the credit union accounts.

Subpart A—Mergers

§ 708b.101 Mergers generally.

(a) In any case where a merger will result in the termination of federal insurance or conversion to nonfederal insurance, the merging credit union must comply with the provisions of Subparts B and C in addition to this Subpart A.

(b) A federally-insured credit union must have the prior written approval of the NCUA before merging with any other credit union.

(c) Where the continuing credit union is a federal credit union, it must be in compliance with the chartering policies of the NCUA.

(d) Where the continuing or merging credit union is a state credit union, the merger must be permitted by state law or authorized by the state authority.

(e) Where both the merging and continuing credit unions are federally-insured and the two credit unions have overlapping fields of membership, the continuing credit union must, within three months after completion of the merger, either:

(1) Notify all members of the continuing credit union of the potential loss of insurance coverage if they had overlapping membership, (2) Notify all individuals and entities that were actually members of both credit unions of the potential loss of insurance coverage, or

(3) Determine which members of both credit unions may actually have uninsured funds six months after the merger and notify those members of the potential loss of insurance coverage.

§ 708b.102 Special provisions for federal insurance.

(a) Where the continuing credit union is federally-insured, the NCUSIF will assess a deposit and a prorated insurance premium (unless waived in whole or in part for all insured credit unions during that year) on the additional share accounts insured as a result of the merger of a nonfederally-insured or uninsured credit union with a federally-insured credit union.

(b) Where the continuing credit union is nonfederally-insured or uninsured but desires to be federally-insured as of the date of the merger, it must submit an application to the appropriate Regional Director when the merging credit union requests approval of the merger proposal. If the Regional Director approves the merger, the NCUSIF will assess a deposit and a prorated insurance premium (unless waived in whole or in part for all insured credit unions during that year) on any additional share accounts insured as a result of the merger.

(c) Where the continuing credit union is nonfederally-insured or uninsured and does not make application for insurance, but the merging credit union is federally-insured, the continuing credit union is entitled to a refund of the merging credit union's NCUSIF deposit and to a refund of the unused portion of the NCUSIF share insurance premium (if any). If the continuing credit union is uninsured, the NCUSIF will make the refund only after expiration of the one-year period of continued insurance coverage noted in subsection (e) of this section.

(d) Where the continuing credit union is nonfederally-insured, NCUSIF insurance of the member accounts of a merging federally-insured credit union ceases as of the effective date of the merger.

(e) Where the continuing credit union is uninsured, NCUSIF insurance of the member accounts of the merging federally-insured credit union will continue for a period of one year, subject to the restrictions in Section 206(d)(1) of the Act.

§ 708b.103 Preparation of merger plan.

(a) Upon the approval of a proposition for merger by the boards of directors of the credit unions, the two credit unions must prepare a plan for the proposed merger that includes:

(1) Current financial statements for both credit unions;

(2) Current delinquent loan summaries and analyses of the adequacy of the Allowance for Loan and Lease Losses account;

(3) Consolidated financial statements, including an assessment of the generally accepted accounting principles (GAAP) net worth of each credit union before the merger and the GAAP net worth of the continuing credit union after the merger;

(4) Analyses of share values;

(5) Explanation of any proposed share adjustments;

(6) Explanation of any provisions for reserves, undivided earnings or dividends;

(7) Provisions with respect to notification and payment of creditors;

(8) Explanation of any changes relative to insurance such as life savings and loan protection insurance and insurance of member accounts;

(9) Provisions for determining that all assets and liabilities of the continuing credit union will conform with the requirements of the Act (where the continuing credit union is a federal credit union); and

(10) Proposed charter amendments (where the continuing credit union is a federal credit union). These amendments, if any, will usually pertain to the name of the credit union and the definition of its field of membership.

(b) [Reserved.]

§ 708b.104 Submission of merger proposal to the NCUA.

(a) Upon approval of the merger plan by the boards of directors of the credit unions, the credit unions must submit the following information to the Regional Director:

(1) The merger plan, as described in this Part;

(2) Resolutions of the boards of directors;

(3) Proposed Merger Agreement;

(4) Proposed Notice of Special Meeting of the Members (for merging federal credit unions);

(5) Copy of the form of Ballot to be sent to the members (for merging federal credit unions);

(6) Evidence that the state's supervisory authority approves the merger proposal (for states that require such agreement before NCUA approval);

(7) Application and Agreement for Insurance of Member Accounts (for continuing state credit unions desiring to become federally-insured);

(8) If the merging credit union has $50 million or more in assets on its latest call report, a statement about whether the two credit unions intend to make a Hart-Scott-Rodino Act premerger notification filing with the Federal Trade Commission and, if not, an explanation why not; and

(9) For mergers where the continuing credit union is not federally-insured and will not apply for federal insurance:

(i) A written statement from the continuing credit union that it "will fully comply with the requirements of 12 U.S.C. 1831t(b), including all

notification and acknowledgment requirements''; and

(ii) Proof that the accounts of the credit union will be accepted for coverage by the nonfederal insurer (if the credit union will have nonfederal insurance).

§ 708b.105 Approval of merger proposal by the NCUA.

(a) In any case where the continuing credit union is federally-insured and the merging credit union is nonfederally-insured or uninsured, the NCUA will determine the potential risk to the NCUSIF.

(b) If the NCUA finds that the merger proposal complies with the provisions of this Part and does not present an undue risk to the NCUSIF, it may approve the proposal subject to any other specific requirements as it may prescribe to fulfill the intended purposes of the proposed merger. For mergers of federal credit unions into federally-insured credit unions, if the NCUA determines that the merging credit union is in danger of insolvency and that the proposed merger would reduce the risk or avoid a threatened loss to the NCUSIF, the NCUA may permit the merger to become effective without an affirmative vote of the membership of the merging credit union otherwise required by § 708b.106 of this Part.

(c) NCUA may approve any proposed charter amendments for a continuing federal credit union contingent upon the completion of the merger. All charter amendments must be consistent with NCUA chartering policy.

§ 708b.106 Approval of the merger proposal by members.

(a) When the merging credit union is a federal credit union, the members must:

(1) Have the right to vote on the merger proposal in person at the annual meeting, if within 60 days after NCUA approval, or at a special meeting to be called within 60 days of NCUA approval, or by mail ballot, received no later than the date and time announced for the annual meeting or the special meeting called for that purpose.

(2) Be given advance notice of the meeting in accordance with the provisions of Article IV, Meetings of Members, Federal Credit Union Bylaws. The notice must:

(i) Specify the purpose of the meeting and the time and place;

(ii) Contain a summary of the merger plan, including, but not necessarily limited to, current financial statements for each credit union, a consolidated financial statement for the continuing credit union, analyses of share values, explanation of any proposed share adjustments, explanation of any changes relative to insurance such as life savings and loan protection insurance and insurance of member accounts;

(iii) State reasons for the proposed merger;

(iv) Provide name and location, including branches, of the continuing credit union;

(v) Inform the members that they have the right to vote on the merger proposal in person at the meeting or by written ballot to be received no later than the date and time announced for the annual meeting or the special meeting called for that purpose; and

(vi) Be accompanied by a Ballot for Merger Proposal.

(b) Approval of a proposal to merge a federal credit union into a federally-insured credit union requires the affirmative vote of a majority of the members of the merging credit union who vote on the proposal. If the continuing credit union is uninsured or nonfederally-insured, the voting requirements of subpart B apply. If the continuing credit union is nonfederally-insured, the merging credit union must use the form notice and ballot in Subpart C of this Part unless the Regional Director approves the use of different forms.

§ 708b.107 Certificate of vote on merger proposal.

The board of directors of the merging federal credit union must certify the results of the membership vote to the Regional Director within 10 days after the vote is taken. The certification must include the total number of members of record of the credit union, the number who voted on the merger, the number who voted in favor, and the number who voted against. If the continuing credit union is nonfederally-insured, the merging credit union must use the certification form in Subpart C of this Part unless the Regional Director approves the use of a different form.

§ 708b.108 Completion of merger.

(a) Upon approval of the merger proposal by the NCUA and by the state supervisory authority (where the continuing or merging credit union is a state credit union) and by the members of each credit union where required, the credit unions may complete the merger.

(b) Upon completion of the merger, the board of directors of the continuing credit union must certify the completion of the merger to the Regional Director within 30 days after the effective date of the merger.

(c) Upon the NCUA's receipt of certification that the merger has been completed, the NCUA will cancel the charter of the merging federal credit union (if applicable) and the insurance certificate of any merging federally-insured credit union.

Subpart B—Voluntary Termination or Conversion of Insured Status

§ 708b.201 Termination of insurance.

(a) A state credit union may terminate federal insurance, if permitted by state law, either on its own or by merging into an uninsured credit union.

(b) A federal credit union may terminate federal insurance only by merging into, or converting its charter to, an uninsured state credit union.

(c) A majority of the credit union's members must approve a termination of insurance by affirmative vote. The credit union must use an independent entity to collect and tally the votes and certify the results for all terminations, including terminations that involve a merger or charter conversion. The vote must also be taken by secret ballot, meaning that no credit union employee or official can determine how a particular member voted.

(d) Termination of federal insurance requires the NCUA's prior written approval. A credit union must notify the NCUA and request approval of the termination through the Regional Director in writing at least 90 days before the proposed termination date and within one year after obtaining the membership vote. The notice to the NCUA must include:

(1) A written statement from the credit union that it ''will fully comply with the requirements of 12 U.S.C. 1831t(b), including all notification and acknowledgment requirements;'' and

(2) A certification of the member vote. The certification must include the total number of members of record of the credit union, the number who voted in favor of the termination, and the number who voted against.

(e) The NCUA will approve or disapprove the termination in writing within 90 days after being notified by the credit union.

§ 708b.202 Notice to members of proposal to terminate insurance.

(a) When the board of directors of a federally-insured credit union adopts a resolution proposing to terminate federal insurance, including termination due to a merger or conversion of charter, it must provide its members with written notice of the proposal to terminate and of the date set for the membership vote. The first written communication following the resolution that is made by or on behalf of the credit

union and that informs the members that the credit union will seek termination is the notice of the proposal to terminate. This notice must:

(1) Inform the members of the requirement for a membership vote and the date for the vote;

(2) Explain that the insurance provided by the NCUA is federal insurance and is backed by the full faith and credit of the United States government; and

(3) Include a conspicuous statement that if the termination or merger is approved, and the credit union, or the continuing credit union in the case of a merger, subsequently fails, the federal government does not guarantee the member will get his or her money back.

(b) The credit union must deliver the notice in person to each member, or mail it to each member at the address for the member as it appears on the records of the credit union, not more than 30 nor less than 7 days before the date of the vote. The membership must be given the opportunity to vote by mail ballot. The credit union may provide the notice of the proposal and the ballot to members at the same time.

(c) If the membership and the NCUA approve the proposition for termination of insurance, the credit union must give the members prompt and reasonable notice of termination.

§ 708b.203 Conversion of insurance.

(a) A federally-insured state credit union may convert to nonfederal insurance, if permitted by state law, either on its own or by merging into a nonfederally-insured credit union.

(b) A federal credit union may convert to nonfederal insurance only by merging into, or converting its charter to, a nonfederally-insured state credit union.

(c) Conversion to nonfederal insurance requires the prior written approval of the NCUA. After the credit union board of directors resolves to seek a conversion, the credit union must notify the Regional Director promptly, in writing, of the desired conversion and request NCUA approval of the conversion. The notification must be in the form specified in Subpart C of this part, unless the Regional Director approves a different form. The credit union must provide this notification and request for approval to the Regional Director at least 14 days before the credit union notifies it members and seeks their vote and at least 90 days before the proposed conversion date.

(d) Approval of a conversion of federal to nonfederal insurance requires the affirmative vote of a majority of the credit union's members who vote on the proposition, provided at least 20 percent of the total membership participates in the voting. The credit union must use an independent entity to collect and tally the votes and certify the results for all conversions, including conversions that involve a charter conversion or merger. The vote must be taken by secret ballot, meaning that no credit union employee or official can determine how a particular member voted.

(e) For all conversions, the notice to the NCUA must include:

(1) A written statement from the credit union that it ''will fully comply with the requirements of 12 U.S.C. 1831t(b), including all notification and acknowledgment requirements;'' and

(2) Proof that the nonfederal insurer is authorized to issue share insurance in the state where the credit union is located and that the insurer will insure the credit union.

(f) The board of directors of the credit union and the independent entity that conducts the membership vote must certify the results of the membership vote to the NCUA within 10 days after the deadline for receipt of votes. The certification must include the total number of members of record of the credit union, the number who voted on the conversion, the number who voted in favor of the conversion, and the number who voted against. The certification must be in the form specified in Subpart C of this Part.

(g) Generally, the NCUA will approve or disapprove the conversion in writing within 14 days after receiving the certification of the vote.

(h) For conversions by merger, the merging credit unions must follow the procedures specified in Subparts A and B of this Part and use the forms specified in Subpart C of this Part. In the event the procedures of Subpart A and B conflict, the credit union must follow Subpart B.

§ 708b.204 Notice to members of proposal to convert insurance.

(a) When the board of directors of a federally-insured credit union adopts a resolution proposing to convert from federal to nonfederal insurance, including an insurance conversion associated with a merger or conversion of charter, it must provide its members with written notice of the proposal to convert insurance and of the date set for the membership vote. The first written communication following this resolution that is made by or on behalf of the credit union and that informs the members that the credit union will seek conversion of insurance is the notice of the proposal to convert. This notice must:

(1) Inform the members of the requirement for a membership vote and the date for the vote;

(2) Explain that the insurance provided by the NCUA is federal insurance and is backed by the full faith and credit of the United States government, while the insurance provided by the nonfederal insurer is not guaranteed by the federal or any state government;

(3) Include a conspicuous statement that if the conversion or merger is approved, and the credit union, or the continuing credit union in the case of a merger, subsequently fails, the federal government does not guarantee the member will get his or her money back;

(4) Inform the members that if the conversion or merger is approved, the credit union will permit members that have share certificates or other term accounts at the credit union to close those accounts before the effective date of the merger without any early withdrawal penalty; and

(5) Be in the form set forth in Subpart C of this Part, unless the Regional Director approves a different form.

(b) The credit union must deliver the notice in person to each member or mail it to each member at the address for the member as it appears on the records of the credit union, not more than 30 nor less than 7 days before the date for the vote. The credit union must give the membership the opportunity to vote by mail ballot. The form of the ballot must be as set forth in Subpart C of this Part, unless the Regional Director approves the use of a different form. The notice of the proposal and the ballot may be provided to the members at the same time.

(c) If the membership and the NCUA approve the proposition for conversion of insurance, the credit union will give prompt and reasonable notice to the membership. The notice must identify the effective date of the conversion, and include a conspicuous statement that:

(1) The conversion will result in the loss of federal share insurance, and

(2) The credit union will, at any time before the effective date of conversion, permit all members who have share certificates or other term accounts to close those accounts without an early withdrawal penalty.

§ 708b.205 Modifications to notice.

(a) Any modifications or additions to the notices, ballots, or certifications as provided in Subpart C of this Part may be made only with the prior written approval of the Regional Director and, in the case of a state credit union, also require the approval of the appropriate state authority. For information directed

to members, the Regional Director may withhold approval of such modifications or additions if he or she determines that the credit union, by inclusion or omission of information, would materially mislead or misinform its membership.

(b) Federally-insured state credit unions may include additional language in the notice and ballot regarding state requirements for mergers, where appropriate.

§ 708b.206 Share insurance communications to members.

(a) Every share insurance communication must comply with § 740.2 of this Chapter, which, in part, prohibits federally-insured credit unions from making any representation that is inaccurate or deceptive in any particular.

(b) Every share insurance communication about share insurance conversion must contain the following conspicuous statement: ''IF YOU ARE A MEMBER OF THIS CREDIT UNION, YOUR ACCOUNTS ARE CURRENTLY INSURED BY THE NATIONAL CREDIT UNION ADMINISTRATION, A FEDERAL AGENCY. THIS FEDERAL INSURANCE IS BACKED BY THE FULL FAITH AND CREDIT OF THE UNITED STATES GOVERNMENT. IF THE CREDIT UNION CONVERTS TO PRIVATE INSURANCE AND THE CREDIT UNION FAILS, THE FEDERAL GOVERNMENT DOES NOT GUARANTEE THAT YOU WILL GET YOUR MONEY BACK.'' The statement must:

(1) Appear on the first page of the communication where conversion is discussed and, if the communication is on an internet website posting, must be visible without scrolling; and

(2) Must be in capital letters, bolded, offset from the other text by use of a border, and at least one font size larger than any other text (exclusive of headings) used in the communication.

(c) Every share insurance communication about share insurance termination must contain the following conspicuous statement: ''IF YOU ARE A MEMBER OF THIS CREDIT UNION, YOUR ACCOUNTS ARE CURRENTLY INSURED BY THE NATIONAL CREDIT UNION ADMINISTRATION, A FEDERAL AGENCY. THIS FEDERAL INSURANCE IS BACKED BY THE FULL FAITH AND CREDIT OF THE UNITED STATES GOVERNMENT. IF THE CREDIT UNION TERMINATES ITS FEDERAL INSURANCE AND THE CREDIT UNION FAILS, THE FEDERAL GOVERNMENT DOES NOT GUARANTEE THAT YOU WILL GET YOUR MONEY BACK.'' The statement must:

(1) Appear on the first page of the communication where termination is discussed and, if the communication is on an internet website posting, must be visible without scrolling; and

(2) Must be in capital letters, bolded, offset from the other text by use of a border, and at least one font size larger than any other text (exclusive of headings) used in the communication.

(d) Any share insurance communication that will be made during the voting period may be made only with the prior written approval of the Regional Director and, in the case of a state credit union, also with the approval of the appropriate state authority. The Regional Director may withhold approval of such communications if he or she determines that the communication, by inclusion or omission of information, would materially mislead or misinform the credit union's membership. For purposes of this paragraph, the voting period begins on the date of the board of director's resolution to seek conversion or termination and ends on the date the member voting closes.

Subpart C—Forms

§ 708b.301 Conversion of insurance (State Chartered Credit Union).

Unless the Regional Director approves the use of different forms, a state chartered credit union must use the forms in this section in connection with a conversion to nonfederal insurance.

(a) Form letter notifying NCUA of intent to convert:

(insert name), NCUA Regional Director

(insert address of NCUA Regional Director)

Re: Notice of Intent to Convert to Private Share Insurance

Dear Director (insert name):

In accordance with federal law at Title 12, United States Code Section 1785(b)(1)(D), I request the National Credit Union Administration approve the conversion of (insert name of credit union) from federal share insurance to private primary share insurance with (insert name of private insurance company).

On (insert date), the board of directors of (insert name of credit union) resolved to pursue the conversion from federal insurance to private insurance. A copy of the resolution is enclosed.

On (insert date), the credit union plans to solicit the vote of our members on the conversion. The credit union will employ (insert name, address, and telephone number of independent entity) to conduct the member vote. The credit union will use the form notice and ballot required by NCUA regulations, and will certify the results to NCUA as required by NCUA regulations.

Aside from the notice and ballot, the credit union (does)(does not) intend to provide its members with additional written information about the conversion. I understand that NCUA regulations forbid any communications to members, including communications about NCUA insurance or private insurance, that are inaccurate or deceptive. I have enclosed copies of all draft communications that, under NCUA regulations, require your review and approval.

(Insert name of State) allows credit unions to obtain primary share insurance from (insert name of private insurance company). I have enclosed a copy of a letter from (insert name and title of state regulator) establishing that (insert name of private insurer) has the authority to provide (insert name of credit union) with primary share insurance.

I have enclosed a copy of a letter from (insert name of private insurer) indicating it has accepted (insert name of credit union) for primary share insurance and will insure the credit union immediately upon the date that it loses its federal share insurance.

You have my assurances that, in connection with the proposed conversion of (insert name of credit union) to private share insurance, the credit union will fully comply with all the notice, disclosure, and acknowledgment requirements of 12 U.S.C. 1831t(b). Upon conversion, the credit union will keep the Federal Trade Commission apprised of its efforts to comply with section 1831t(b).

The point of contact for conversion matters is (insert name and title of credit union employee), who can be reached at (insert telephone number).

Sincerely,

(signature)

Chief Executive Officer.

Enclosures

(b) Form notice to members of intent to convert and special meeting of members:

Notice of Proposal to Convert to Nonfederally-insured Status and Special Meeting of Members

(Insert Name of Converting Credit Union)

On (insert date), the board of directors of your credit union approved a proposition to convert from federal share (deposit) insurance to nonfederal insurance. You are encouraged to attend a special meeting of our credit union at (insert address) on (insert time and date) to address this proposition.

Purpose of Meeting

The meeting has two purposes:

1. To consider and act upon a proposal to convert your account insurance from federal insurance to private insurance.

2. To approve the action of the Board of Directors in authorizing the officers of the credit union to carry out the proposed conversion.

Insurance Conversion

Currently, your accounts have share insurance provided by the National Credit Union Administration, an agency of the

federal government. The basic federal coverage is up to $100,000, but accounts may be structured in different ways, such as joint accounts, payable-on-death accounts, or IRA accounts, to achieve federal coverage of much more than $100,000. If the conversion is approved, your federal insurance will terminate on the effective date of the conversion. Instead, your accounts in the credit union will instead be insured up to $(insert dollar amount) by (insert name of insurer), a corporation chartered by the State of (insert name of State). The federal insurance provided by the National Credit Union Administration is backed by the full faith and credit of the United States government. The private insurance you will receive from (insert name of insurer), however, is not guaranteed by the federal or any state or local government.

IF THIS CONVERSION IS APPROVED, AND THE (insert name of credit union) FAILS, THE FEDERAL GOVERNMENT DOES NOT GUARANTEE YOU WILL GET YOUR MONEY BACK.

Also, because this conversion, if approved, would result in the loss of federal share insurance, the credit union will, at any time after approval of the conversion and before the effective date of conversion, permit all members who have share certificates or other term accounts to close those accounts without an early withdrawal penalty.

The board of directors has concluded that the proposed conversion is desirable for the following reasons: (insert reasons). (This is an optional paragraph. If it is used, the proposed language must be submitted to the Regional Director for approval).

The proposed conversion will result in the following one-time cost associated with the conversion: (List the total estimated dollar amount, including (1) the cost of conducting the vote, (2) the cost of changing the credit union's name and insurance logo, and (3) attorney and consultant fees.) The conversion must have the approval of a majority of members who vote on the proposal, provided at least 20 percent of the total membership participates in the voting.

Enclosed with this Notice of Special Meeting is a ballot. If you cannot attend the meeting, please complete the ballot and return it to (insert name and address of independent entity conducting the vote) by no later than (insert time and date). To be counted, your ballot must reach us by that date and time.

By order of the board of directors.

(signature of Board Presiding Officer)

(insert title and date)

(c) Form ballot:

Ballot for Conversion to Nonfederally-insured Status

(Insert Name of Converting Credit Union)

Name of Member: (insert name)

Account Number: (insert account number)

The credit union must receive this ballot by (insert date and time for vote). Please mail or bring it to: (Insert name of independent entity and address)

I understand if the conversion of the (insert name of credit union) is approved, the National Credit Union Administration share (deposit) insurance I now have, up to $100,000, or possibly more if I use different accounts structures, will terminate upon the effective date of the conversion. Instead, my shares in the (insert name of credit union) will be insured up to $(insert dollar amount) by (insert name of insurer), a corporation chartered by the State of (insert name of state). The federal insurance provided by the National Credit Union Administration is backed by the full faith and credit of the United States Government. The private insurance provided by (insert name of insurer) is not.

I FURTHER UNDERSTAND THAT IF THIS CONVERSION IS APPROVED, AND THE (insert name of credit union) FAILS, THE FEDERAL GOVERNMENT DOES NOT GUARANTEE THAT I WILL GET MY MONEY BACK.

I vote on the proposal as follows (check one box):

[] Approve the conversion to private insurance and authorize the Board of Directors to take all necessary action to accomplish the conversion.

[] DO NOT approve the conversion to private insurance.

Signed _____

(Insert printed member's name)

Date: _____

(d) Form certification of member vote to NCUA:

Certification of Vote on Conversion to Nonfederally-insured Status

We, the undersigned officers of the (insert name of converting credit union), certify the completion of the following actions:

1. At a meeting on (insert date), the Board of Directors adopted a resolution to seek the conversion of our primary share insurance coverage from NCUA to (insert name of private insurer).

2. Not more than 30 nor less than 7 days before the date of the vote, copies of the notice of special meeting and the ballot, as approved by the National Credit Union Administration, were mailed to our members.

3. The credit union arranged for the conduct of a special meeting of our members at the time and place announced in the Notice to consider and act upon the proposed conversion.

4. At the special meeting, the credit union arranged for an explanation of the conversion to the members present at the special meeting.

5. (Insert name), an entity independent of the credit union, conducted the membership vote at the special meeting. The members voted as follows:

(insert) Number of total members

(insert) Number of members present at the special meeting

(insert) Number of members present who voted in favor of the conversion

(insert) Number of members present who voted against the conversion

(insert) Number of additional written ballots in favor of the conversion

(insert) Number of additional written ballots opposed to the conversion

(insert ''20% or more'') OR (insert ''Less than 20%'') of the total membership voted. Of those who voted, a majority voted (inset ''in favor of'') OR (''against'') conversion.

The action of the members at the special meeting was recorded in the minutes.

This certification signed the (insert date).

(signature of Board Presiding Officer)
(insert typed name and title)
(signature of Board Secretary)
(insert typed name and title)

I (insert name), an officer of the (insert name of independent entity that conducted the vote), hereby certify that the information recorded in paragraph 5 above is accurate.

This certification signed the (insert date):

(signature of officer of independent entity)(typed name, title, and phone number)

§ 708b.302 Conversion of Insurance (Federal Credit Union).

Unless the Regional Director approves the use of different forms, a federal credit union must use the following forms in this section in connection with a conversion to a nonfederally-insured state charter.

(a) Form letter notifying NCUA of intent to convert:

(insert name), NCUA Regional Director
(insert address of NCUA Regional Director)
Re: Notice of Intent to Convert to State Charter and to Private Share Insurance

Dear Director (insert name):

In accordance with federal law at Title 12, United States Code Section 1785(b)(1)(D), I request the National Credit Union Administration approve the conversion of (insert name of federal credit union) to a state charter in (insert name of state) and from federal share insurance to private primary share insurance with (insert name of private insurance company).

On (insert date), the board of directors of (insert name of credit union) resolved to pursue the charter conversion and the conversion from federal insurance to private insurance. A copy of the resolution is enclosed.

On (insert date), the credit union plans to solicit the vote of our members on the conversion. The credit union will employ (insert name, address, and telephone number of independent entity) to conduct the member vote. The credit union will use the form notice and ballot required by NCUA regulations, and will certify the results to NCUA as required by NCUA regulations.

Aside from the notice and ballot, the credit union (does)(does not) intend to provide our members with additional written information about the conversion. I understand that NCUA regulations forbid any communications to members, including communications about NCUA insurance or private insurance, that are inaccurate or deceptive. I have enclosed copies of all draft communications that, under NCUA regulations, require your review and approval.

I have enclosed a copy of a letter from (insert name and title of state regulator) indicating approval of our conversion to a state charter.

(Insert name of State) allows credit unions to obtain primary share insurance from (insert name of private insurance company). I have enclosed a copy of a letter from (insert name and title of state regulator) establishing that (insert name of private insurer) has the authority to provide (insert name of credit union), after conversion to a state charter, with primary share insurance.

I have enclosed a copy of a letter from (insert name of private insurer) indicating it has accepted (insert name of credit union) for primary share insurance and will insure the credit union immediately upon the date that it loses its federal share insurance.

You have my assurances that, in connection with the proposed conversion of (insert name of credit union) to a state charter and to private share insurance, the credit union will fully comply with all the notice, disclosure, and acknowledgment requirements of 12 U.S.C. 1831t(b). Upon conversion, the credit union will keep the Federal Trade Commission apprised of its efforts to comply with section 1831t(b).

Enclosed you will also find other information required by NCUA's Chartering and Field of Membership Manual, Chapter 4, § III.C.

The point of contact for conversion matters is (insert name and title of credit union employee), who can be reached at (insert telephone number).

Sincerely,

(signature),
Chief Executive Officer.

Enclosures

(b) Form notice to members of intent to convert and special meeting of members:

Notice of Proposal to Convert to a State Charter and to Nonfederally-insured Status and Special Meeting of Members

(Insert name of converting credit union)

On (insert date), the board of directors of your credit union approved a proposition to convert from federal share (deposit) insurance to nonfederal insurance and to convert from a federal credit union to a state-chartered credit union. You are encouraged to attend a special meeting of our credit union at (insert address) on (insert time and date) to address this proposition.

Purpose of Meeting

The meeting has two purposes:

1. To consider and act upon a proposal to convert your credit union from a federal charter to a state charter and your account insurance from federal insurance to private insurance.

2. To approve the action of the Board of Directors in authorizing the officers of the credit union to carry out the proposed conversion.

Insurance Conversion

Currently, your accounts have share insurance provided by the National Credit Union Administration, an agency of the federal government. The basic federal coverage is up to $100,000, but accounts may be structured in different ways, such as joint accounts, payable-on-death accounts, or IRA accounts, to achieve federal coverage of much more than $100,000. If the conversion is approved, your federal insurance will terminate on the effective date of the conversion. Instead, your accounts in the credit union will instead be insured up to $(insert dollar amount) by (insert name of insurer), a corporation chartered by the State of (insert name of State). The federal insurance provided by the National Credit Union Administration is backed by the full faith and credit of the United States government. The private insurance you will receive from (insert name of insurer), however, is not guaranteed by the federal or any state or local government.

IF THIS CONVERSION IS APPROVED, AND THE (insert name of credit union) FAILS, THE FEDERAL GOVERNMENT DOES NOT GUARANTEE YOU WILL GET YOUR MONEY BACK.

Also, because this conversion, if approved, would result in the loss of federal share insurance, the credit union will, at any time after approval of the conversion and before the effective date of conversion, permit all members who have share certificates or other term accounts to close those accounts without an early withdrawal penalty.

The board of directors has concluded that the proposed conversion is desirable for the following reasons: (insert reasons) (This is an optional paragraph. If it is used, and if it makes reference to the insurance conversion, the proposed language must be submitted to the Regional Director for approval).

The proposed conversion will result in the following one-time cost associated with the conversion: (List the total estimated dollar amount, including (1) the cost of conducting the vote, (2) the cost of changing the credit union's name and insurance logo, and (3) attorney and consultant fees.) The conversion must have the approval of a majority of members who vote on the proposal, provided at least 20 percent of the total membership participates in the voting.

Enclosed with this Notice of Special Meeting is a ballot. If you cannot attend the meeting, please complete the ballot and return it to (insert name and address of independent entity conducting the vote) by no later than (insert time and date). To be counted, your ballot must reach us by that date and time.

By order of the board of directors.

(signature of Board Presiding Officer)

(insert title and date)

(c) Form ballot:

Ballot for Conversion to State Charter and Nonfederally-insured Status

(Insert name of converting credit union)

Name of Member: (insert name)
Account Number: (insert account number)

The credit union must receive this ballot by (insert date and time for vote). Please mail or bring it to: (Insert name of independent entity and address)

I understand if the conversion of the (insert name of credit union) is approved, the National Credit Union Administration share (deposit) insurance I now have, up to $100,000, or possibly more if I use different accounts structures, will terminate upon the effective date of the conversion. Instead, my

shares in the (insert name of credit union) will be insured up to $(insert dollar amount) by (insert name of insurer), a corporation chartered by the State of (insert name of state). The federal insurance provided by the National Credit Union Administration is backed by the full faith and credit of the United States Government. The private insurance provided by (insert name of insurer) is not.

I FURTHER UNDERSTAND THAT, IF THIS CONVERSION IS APPROVED, AND THE (insert name of credit union) FAILS, THE FEDERAL GOVERNMENT DOES NOT GUARANTEE THAT I WILL GET MY MONEY BACK.

I vote on the proposal as follows (check one box):

[] Approve the conversion of charter and conversion to private insurance and authorize the Board of Directors to take all necessary action to accomplish the conversion.

[] DO NOT approve the conversion of charter and the conversion to private insurance.

Signed _____
(Insert printed member's name)

Date: _____

(d) Form certification to NCUA of member vote:

Certification of Vote on Conversion to State Charter and Nonfederally-insured Status

We, the undersigned officers of the (insert name of converting credit union), certify the completion of the following actions:

1. At a meeting on (insert date), the Board of Directors adopted a resolution to seek the conversion of our credit union to a state charter and the conversion of our primary share insurance coverage from NCUA to (insert name of private insurer).

2. Not more than 30 nor less than 7 days before the date of the vote, copies of the notice of special meeting and ballot, as approved by the National Credit Union Administration, were mailed to our members.

3. The credit union arranged for the conduct of a special meeting of our members at the time and place announced in the Notice to consider and act upon the proposed conversion.

4. At the special meeting, the credit union arranged for an explanation of the conversion to the members present at the special meeting.

5. (Insert name), an entity independent of the credit union, conducted the membership vote at the special meeting. The members voted as follows:

(insert) Number of total members

(insert) Number of members present at the special meeting

(insert) Number of members present who voted in favor of the conversion

(insert) Number of members present who voted against the conversion

(insert) Number of additional written ballots in favor of the conversion

(insert) Number of additional written ballots opposed to the conversion

(insert ''20% or more'') OR (insert ''Less than 20%'') of the total membership voted. Of those who voted, a majority voted (inset ''in favor of'') OR (''against'') conversion.

The action of the members at the special meeting was recorded in the minutes.

This certification signed the (insert date).

(signature of Board Presiding Officer)
(insert typed name and title)
(signature of Board Secretary)
(insert typed name and title)

I (insert name), an officer of the (insert name of independent entity that conducted the vote), hereby certify that the information recorded in paragraph 5 above is accurate.

This certification signed the (insert date):

(signature of officer of independent entity)(typed name, title, and phone number)

§ 708b.303 Conversion of insurance through merger.

Unless the Regional Director approves the use of different forms, a federally-insured credit union that is merging into a nonfederally-insured credit union must use the forms in this section.

(a) Form notice to members of intent to merge and convert and special meeting of members:

Notice of Special Meeting on Proposal to Merge and Convert to Nonfederally-insured Status

(Insert name of merging credit union)

On (insert date), the Board of Directors of your credit union approved a proposition to merge with (insert name of continuing credit union) and to convert from federal share (deposit) insurance to nonfederal insurance. You are encouraged to attend a special meeting of our credit union at (insert address) on (insert time and date).

Purpose of Meeting

The meeting has two purposes:

1. To consider and act upon a proposal to merge our credit union with (insert name of continuing credit union), the continuing credit union.

2. To approve the action of the Board of Directors of our credit union in authorizing the officers of the credit union, subject to member approval, to carry out the proposed merger.

If this merger is approved, our credit union will transfer all its assets and liabilities to the continuing credit union. As a member of our credit union, you will become a member of the continuing credit union. On the effective date of the merger, you will receive shares in the continuing credit union for the shares you own now in our credit union.

Insurance Conversion

Currently, your accounts have share insurance provided by the National Credit Union Administration, an agency of the federal government. The basic federal coverage is up to $100,000, but accounts may be structured in different ways, such as joint accounts, payable-on-death accounts, or IRA accounts, to achieve federal coverage of much more than $100,000. If the merger is approved, your federal insurance will terminate on the effective date of the merger. Instead, your accounts in the credit union will be insured up to $(insert dollar amount) by (insert name of insurer), a corporation chartered by the State of (insert name of State). The federal insurance provided by the National Credit Union Administration is backed by the full faith and credit of the United States government. The private insurance you will receive from (insert name of insurer), however, is not guaranteed by the federal or any state or local government.

IF THIS MERGER IS APPROVED AND THE (insert name of continuing credit union) FAILS, THE FEDERAL GOVERNMENT DOES NOT GUARANTEE YOU WILL GET YOUR MONEY BACK.

Also, because this merger, if approved, would result in the loss of federal share insurance, the (insert name of merging credit union) will, at any time after approval of the merger and before the effective date of merger, permit all members who have share certificates or other term accounts to close those accounts without an early withdrawal penalty.

Other Information Related to the Proposed Merger

The directors of the participating credit unions carefully analyzed the assets and liabilities of the participating credit unions and appraised each credit union's share values. The appraisal of the share values appears on the attached individual and consolidated financial statements of the participating credit unions.

The directors of the participating credit unions have concluded that the proposed merger is desirable for the following reasons: (insert reasons) (If any of the reasons are related to the conversion from federal to nonfederal insurance, the proposed language must be submitted to the Regional Director for approval).

The Board of Directors of our credit union believes the merger should include/not include an adjustment in shares for the following reasons: (insert reasons)

The main office of the continuing credit union will be as follows: (insert location)

The branch office(s) of the continuing credit union will be as follows: (insert locations)

The merger must have the approval of a majority of members who vote on the proposal, provided at least 20 percent of the total membership participates in the voting.

Enclosed with this Notice of Special Meeting is a Ballot for Merger Proposal and Conversion to Nonfederally-insured Status. If you cannot attend the meeting, please complete the ballot and return it to (insert name of independent entity conducting vote) at (insert mailing address) by no later than (insert date and time). To be counted, your ballot must reach (insert name of independent entity conducting vote) by the date and time announced for the meeting.

By order of the board of directors.

(signature of Board Presiding Officer)
(insert name and title of Board Presiding Officer) (insert date)

(b) Form ballot:

Ballot for Merger Proposal and Conversion to Nonfederally-insured Status

Name of Member: (insert name)
Account Number: (insert account number)

The credit union must receive this ballot by (insert date and time for vote). Please mail or bring it to: (Insert name of independent entity and address)

I understand if the merger of conversion of the (insert name of merging credit union)into the (insert name of merging credit union is approved, the National Credit Union Administration share (deposit) insurance I now have, up to $100,000, or possibly more if I use different accounts structures, will terminate upon the effective date of the conversion. Instead, my shares in the (insert name of credit union) will be insured up to $(insert dollar amount) by (insert name of insurer), a corporation chartered by the State of (insert name of state). The federal insurance provided by the National Credit Union Administration is backed by the full faith and credit of the United States Government. The private insurance provided by (insert name of insurer) is not.

I FURTHER UNDERSTAND THAT, IF THIS MERGER IS APPROVED AND THE (insert name of continuing credit union) FAILS, THE FEDERAL GOVERNMENT DOES NOT GUARANTEE THAT I WILL GET MY MONEY BACK.

I vote on the proposal as follows (check one box):

[] Approve the merger and the conversion to private insurance and authorize the Board of Directors to take all necessary action to accomplish the merger and conversion.

[] DO NOT approve the merger and the conversion to private insurance.

Signed _____
(Insert printed member's name)

Date: _____

(c) Form certification of vote:

Certification of Vote on Merger Proposal and Conversion to Nonfederally-insured Status of the (Insert name of merging credit union)

We, the undersigned officers of the (insert name of merging credit union), certify the completion of the following actions:

1. At a meeting on (insert date), the Board of Directors adopted a resolution approving the merger of our credit union with (insert name of continuing credit union).

2. Not more than 30 nor less than 7 days before the date of the vote, copies of the notice of special meeting and the ballot, as approved by the National Credit Union Administration, and a copy of the merger plan announced in the notice, were mailed to our members.

3. The credit union arranged for the conduct of a special meeting of our members at the time and place announced in the Notice to consider and act upon the proposed merger.

4. At the special meeting, the credit union arranged for an explanation of the merger proposal and any changes in federally-insured status to the members present at the special meeting.

5. (insert name), an entity independent of the credit union, conducted the membership vote at the special meeting. At least 20 percent of our total membership voted and a majority of voting members favor the merger as follows:

(insert) Number of total members

(insert) Number of members present at the special meeting

(insert) Number of members present who voted in favor of the merger

(insert) Number of members present who voted against the merger

(insert) Number of additional written ballots in favor of the merger

(insert) Number of additional written ballots opposed to the merger

6. The action of the members at the special meeting was recorded in the minutes.

This certification signed the (insert date):

(signature of Board Presiding Officer)
(insert typed name and title)
(signature of Board Secretary)
(insert typed name and title)

I (insert name), an officer of the (insert name of independent entity that conducted the vote), hereby certify that the information recorded in paragraph 5 above is accurate.

This certification signed the (insert date):

(signature of officer of independent entity)(typed name, title, and phone number)

[FR Doc. 04–17256 Filed 7–28–04; 8:45 am]

BILLING CODE 7535–01–P

DEPARTMENT OF TRANSPORTATION

Federal Aviation Administration

14 CFR Part 39

[Docket No. 2003–SW–51–AD]

RIN 2120–AA64

Airworthiness Directives; MD Helicopters, Inc. Model 600N Helicopters

AGENCY: Federal Aviation Administration, DOT.

ACTION: Notice of proposed rulemaking (NPRM).

SUMMARY: This document proposes adopting a new airworthiness directive (AD) for the MD Helicopters, Inc. Model 600N helicopters. The AD would require replacing the fuselage Station 75 control support bracket assembly (control support bracket), reducing the life limit, and revising the Limitations section of the applicable maintenance manual to state the reduced life limits on certain serial-numbered helicopters. This proposal is prompted by information received from the manufacturer indicating that the fatigue life of the control support bracket is shorter than the original analysis indicated. The actions specified by the proposed AD are intended to prevent failure of the control support bracket

and subsequent loss of control of the helicopter.

DATES: Comments must be received on or before September 27, 2004.

ADDRESSES: Submit comments in triplicate to the Federal Aviation Administration (FAA), Office of the Regional Counsel, Southwest Region, Attention: Rules Docket No. 2003–SW–51–AD, 2601 Meacham Blvd., Room 663, Fort Worth, Texas 76137. You may also send comments electronically to the Rules Docket at the following address: *9-asw-adcomments@faa.gov*. Comments may be inspected at the Office of the Regional Counsel between 9 a.m. and 3 p.m., Monday through Friday, except Federal holidays.

FOR FURTHER INFORMATION CONTACT: Fred Guerin, Aviation Safety Engineer, FAA, Los Angeles Aircraft Certification Office, Airframe Branch, 3960 Paramount Blvd., Lakewood, California 90712, telephone (562) 627–5232, fax (562) 627–5210.

SUPPLEMENTARY INFORMATION:

Comments Invited

Interested persons are invited to participate in the making of the proposed rule by submitting such written data, views, or arguments as they may desire. Communications should identify the Rules Docket number and be submitted in triplicate to the address specified above. All communications received on or before the closing date for comments will be considered before taking action on the proposed rule. The proposals contained in this document may be changed in light of the comments received.

Comments are specifically invited on the overall regulatory, economic, environmental, and energy aspects of the proposed rule. All comments submitted will be available, both before and after the closing date for comments, in the Rules Docket for examination by interested persons. A report summarizing each FAA-public contact concerned with the substance of this proposal will be filed in the Rules Docket.

Commenters wishing the FAA to acknowledge receipt of their mailed comments submitted in response to this proposal must submit a self-addressed, stamped postcard on which the following statement is made: ''Comments to Docket No. 2003–SW–51–AD.'' The postcard will be date stamped and returned to the commenter.

Discussion

This document proposes adopting a new AD for MD Helicopters, Inc. Model 600N helicopters. The AD would require replacing the control support bracket assembly, part number (P/N) 369N2608–11, on helicopters that have a yaw stability augmentation system (YSAS) installed, with an airworthy assembly, P/N 600N2608–1. The revised time limits are dependent upon the time the YSAS was initially installed. Revising the applicable maintenance manual to state the reduced life limits would also be required. This proposal is prompted by information received from the manufacturer indicating that the fatigue life of the control support bracket is shorter than the original analysis indicated for those models in which a YSAS is installed. The actions specified by the proposed AD are intended to prevent failure of the control support bracket and subsequent loss of control of the helicopter.

The FAA has reviewed MD Helicopters, Inc. Service Bulletin No. SB600N–040, dated September 18, 2003, which describes the revised finite life for the control support bracket on certain serial-numbered helicopters, and requiring replacing them upon reaching the revised life limit, or no later than November 30, 2005, whichever occurs first.

This unsafe condition is likely to exist or develop on other helicopters of the same type design. Therefore, the proposed AD would require replacing the control support bracket before it reaches a certain number of hours time-in-service, or no later than November 30, 2005, whichever occurs first.

The FAA estimates that this proposed AD would affect 13 helicopters of U.S. registry, and replacing the control support bracket would take approximately 40 work hours per helicopter to accomplish at an average labor rate of $65 per work hour. Required parts would cost approximately $5,617 per helicopter. Based on these figures, the total cost impact of the proposed AD on U.S. operators would be $106,821 to replace the control support bracket on each helicopter in the fleet.

The regulations proposed herein would not have a substantial direct effect on the States, on the relationship between the national Government and the States, or on the distribution of power and responsibilities among the various levels of government. Therefore, it is determined that this proposal would not have federalism implications under Executive Order 13132.

For the reasons discussed above, I certify that this proposed regulation (1) is not a ''significant regulatory action'' under Executive Order 12866; (2) is not a ''significant rule'' under the DOT Regulatory Policies and Procedures (44 FR 11034, February 26, 1979); and (3) if promulgated, will not have a significant economic impact, positive or negative, on a substantial number of small entities under the criteria of the Regulatory Flexibility Act. A copy of the economic evaluation prepared for this action is contained in the Rules Docket. A copy of it may be obtained by contacting the Rules Docket at the location provided under the caption **ADDRESSES.**

List of Subjects in 14 CFR Part 39

Air transportation, Aircraft, Aviation safety, Safety.

The Proposed Amendment

Accordingly, pursuant to the authority delegated to me by the Administrator, the Federal Aviation Administration proposes to amend part 39 of the Federal Aviation Regulations (14 CFR part 39) as follows:

PART 39—AIRWORTHINESS DIRECTIVES

1. The authority citation for part 39 continues to read as follows:

Authority: 49 U.S.C. 106(g), 40113, 44701.

§ 39.13 [Amended]

2. Section 39.13 is amended by adding a new airworthiness directive to read as follows:

MD Helicopters, Inc.: Docket No. 2003–SW–51–AD.

Applicability: Model 600N helicopters, serial numbers with a prefix of ''RN'' and numbers 025, 029, 032, 034 through 038, 040, 041, 045, 048, or 067; or, any Model 600N helicopter with a yaw stability augmentation system (YSAS) installed, and with a control support bracket assembly, part number (P/N) 369N2608–11, installed, certificated in any category.

Compliance: Required as indicated, unless accomplished previously.

To prevent failure of the fuselage Station 75 control support bracket assembly (control support bracket) and subsequent loss of control of the helicopter, accomplish the following:

(a) Replace the control support bracket, part number 369N2608–11, with an airworthy control support bracket assembly, P/N 600N2608–1, no later than November 30, 2005, or by the time the helicopter reaches the hours time-in-service (TIS) listed in the chart below, whichever occurs first:

Helicopter serial number	Revised finite life (TIS)
RN025	2556
RN029	2377
RN032	2498
RN034	2456
RN035	2243
RN036	2652
RN037	2544

Helicopter serial number	Revised finite life (TIS)
RN038	2531
RN040	2562
RN041	2763
RN045	2015
RN048	2125
RN067	1600

Note: MD Helicopters, Inc. Service Bulletin No. SB600N–040, dated September 18, 2003, pertains to the subject of this AD.

(b) For helicopters with a YSAS installed that are not listed in the previous table, replace the control support bracket, P/N 369N2608–11, with an airworthy control support bracket, P/N 600N2608–1, no later than November 30, 2005, or by the time the helicopter reaches 1,600 hours TIS since the installation of the YSAS.

(c) For helicopters with no YSAS installed, but with a control support bracket, P/N 369N26080–11, installed, replace the control support bracket, with an airworthy control support bracket, P/N 600N2608–1, prior to the installation of a YSAS.

(d) This AD revises the Limitations section of the applicable maintenance manual by reducing the life limit of the control support bracket assembly, part number 369N2608–11, to the life limits stated in paragraph (a) of this AD or to 1,600 hours TIS, whichever occurs first.

(e) To request a different method of compliance or a different compliance time for this AD, follow the procedures in 14 CFR 39.19. Contact the Los Angeles Aircraft Certification Office, Transport Airplane Directorate, FAA, for information about previously approved alternative methods of compliance.

Issued in Fort Worth, Texas, on July 14, 2004.

David A. Downey,

Manager, Rotorcraft Directorate, Aircraft Certification Service.

[FR Doc. 04–17223 Filed 7–28–04; 8:45 am]

BILLING CODE 4910–13–P

DEPARTMENT OF TRANSPORTATION

Federal Aviation Administration

14 CFR Part 39

[Docket No. FAA–2004–18606; Directorate Identifier 2004–CE–17–AD]

RIN 2120–AA64

Airworthiness Directives; Bombardier Inc. Model (Otter) DHC–3 Airplanes

AGENCY: Federal Aviation Administration (FAA), DOT.

ACTION: Notice of proposed rulemaking (NPRM).

SUMMARY: The FAA proposes to adopt a new airworthiness directive (AD) for all Bombardier Inc. Model (Otter) DHC–3 airplanes that have been modified by 524085 BC, Ltd. Supplemental Type Certificate (STC) Number ST01243NY. This proposed AD would require you to replace the existing Viking Air Ltd. elevator servo tab assembly with a redesigned Viking Air Ltd. elevator servo tab assembly. This proposed AD is the result of mandatory continuing airworthiness information (MCAI) issued by the airworthiness authority for Canada. There has been one failure of the elevator servo tab assembly. We are issuing this proposed AD to prevent the structural failure of the elevator servo tab. This failure could lead to loss of control of the airplane.

DATES: We must receive any comments on this proposed AD by September 21, 2004.

ADDRESSES: Use one of the following to submit comments on this proposed AD:

- *DOT Docket web site:* Go to *http://dms.dot.gov* and follow the instructions for sending your comments electronically.
- *Government-wide rulemaking web site:* Go to *http://www.regulations.gov* and follow the instructions for sending your comments electronically.
- *Mail:* Docket Management Facility; U.S. Department of Transportation, 400 Seventh Street, SW., Nassif Building, Room PL–401, Washington, DC 20590–001.
- *Fax:* 1–202–493–2251.
- *Hand Delivery:* Room PL–401 on the plaza level of the Nassif Building, 400 Seventh Street, SW., Washington, DC, between 9 a.m. and 5 p.m., Monday through Friday, except Federal holidays.

You may get the service information identified in this proposed AD from Bombardier Inc., Regional Aircraft, 123 Garratt Boulevard, Downsview, Ontario, Canada M3K 1Y5.

You may view the comments to this proposed AD in the AD docket on the Internet at *http://dms.dot.gov.*

FOR FURTHER INFORMATION CONTACT: David Lawson, Aerospace Engineer, ANE–171, New York Aircraft Certification Office, 1600 Stewart Ave., Suite 410, Westbury, NY 11590; telephone: 516–228–7327; facsimile: 516–794–5531.

SUPPLEMENTARY INFORMATION:

Comments Invited

How do I comment on this proposed AD? We invite you to submit any written relevant data, views, or arguments regarding this proposal. Send your comments to an address listed under **ADDRESSES**. Include the docket number, ''FAA–2004–18606; Directorate Identifier, 2004–CE–17–AD'' at the beginning of your comments. We will post all comments we receive, without change, to *http://dms.dot.gov,* including any personal information you provide. We will also post a report summarizing each substantive verbal contact with FAA personnel concerning this proposed rulemaking. Using the search function of our docket web site, anyone can find and read the comments received into any of our dockets, including the name of the individual who sent the comment (or signed the comment on behalf of an association, business, labor union, etc.). This is docket number FAA–2004–18606. You may review the DOT's complete Privacy Act Statement in the **Federal Register** published on April 11, 2000 (65 FR 19477–78) or you may visit *http://dms.dot.gov.*

Are there any specific portions of this proposed AD I should pay attention to? We specifically invite comments on the overall regulatory, economic, environmental, and energy aspects of this proposed AD. If you contact us through a nonwritten communication and that contact relates to a substantive part of this proposed AD, we will summarize the contact and place the summary in the docket. We will consider all comments received by the closing date and may amend this proposed AD in light of those comments and contacts.

Docket Information

Where can I go to view the docket information? You may view the AD docket that contains the proposal, any comments received, and any final disposition in person at the DMS Docket Offices between 9 a.m. and 5 p.m. (eastern standard time), Monday through Friday, except Federal holidays. The Docket Office (telephone 1–800–647–5227) is located on the plaza level of the Department of Transportation NASSIF Building at the street address stated in **ADDRESSES**. You may also view the AD docket on the Internet at *http://dms.dot.gov.* The comments will be available in the AD docket shortly after the DMS receives them.

Discussion

What events have caused this proposed AD? Transport Canada, which is the airworthiness authority for Canada, recently notified FAA that an unsafe condition may exist on certain Bombardier Inc. Model (Otter) DHC–3 airplanes that incorporate 524085 BC, Ltd. STC Number ST01243NY. Transport Canada reports one incident of structural failure of the elevator servo tab balance assembly.

What is the potential impact if FAA took no action? Vibration may cause structural failure of the elevator servo

tab. This failure could lead to loss of control of the airplane.

Is there service information that applies to this subject? Viking has issued Service Bulletin Number V3/01, dated March 6, 2002.

What are the provisions of this service information? The service bulletin includes procedures for:

—Removing the existing elevator servo tab assembly;

—Installing the new elevator servo tab assembly (PN V3TE1137–1); and

—Balancing the elevator servo tab assembly.

What action did Transport Canada take? Transport Canada classified this service bulletin as mandatory and issued Canadian AD Number CF–2002–48, dated November 21, 2002, to ensure the continued airworthiness of these airplanes in Canada.

Did Transport Canada inform the United States under the bilateral airworthiness agreement? These Bombardier Inc. Model (Otter) DHC–3 airplanes are manufactured in Canada and are type-certificated for operation in the United States under the provisions of section 21.29 of the Federal Aviation Regulations (14 CFR 21.29) and the applicable bilateral airworthiness agreement.

Under this bilateral airworthiness agreement, Transport Canada has kept us informed of the situation described above.

FAA's Determination and Requirements of This Proposed AD

What has FAA decided? We have examined Transport Canada's findings, reviewed all available information, and determined that AD action is necessary for products of this type design that are certificated for operation in the United States.

Since the unsafe condition described previously is likely to exist or develop on other Bombardier Inc. Model (Otter) DHC–3 airplanes of the same type design that are registered in the United States, we are proposing AD action to prevent structural failure of the elevator servo tab. This failure could lead to loss of control of the airplane.

What would this proposed AD require? This proposed AD would require you to incorporate the actions in the previously-referenced service bulletin.

How does the revision to 14 CFR part 39 affect this proposed AD? On July 10, 2002, we published a new version of 14 CFR part 39 (67 FR 47997, July 22, 2002), which governs FAA's AD system. This regulation now includes material that relates to altered products, special flight permits, and alternative methods of compliance. This material previously was included in each individual AD. Since this material is included in 14 CFR part 39, we will not include it in future AD actions.

Costs of Compliance

How many airplanes would this proposed AD impact? We estimate that this proposed AD affects 11 airplanes in the U.S. registry.

What would be the cost impact of this proposed AD on owners/operators of the affected airplanes? We estimate the following costs to accomplish this proposed modification:

Labor cost	Parts cost	Total cost per airplane	Total cost on U.S. operators
7.5 workhours × $65 per hour = $488	$2,630 (The operator may return the original parts to Viking Air Ltd. for credit.).	$3,118	$34,298

Regulatory Findings

Would this proposed AD impact various entities? We have determined that this proposed AD would not have federalism implications under Executive Order 13132. This proposed AD would not have a substantial direct effect on the States, on the relationship between the national Government and the States, or on the distribution of power and responsibilities among the various levels of government.

Would this proposed AD involve a significant rule or regulatory action? For the reasons discussed above, I certify that this proposed AD:

1. Is not a ''significant regulatory action'' under Executive Order 12866;

2. Is not a ''significant rule'' under the DOT Regulatory Policies and Procedures (44 FR 11034, February 26, 1979); and

3. Will not have a significant economic impact, positive or negative, on a substantial number of small entities under the criteria of the Regulatory Flexibility Act.

We prepared a summary of the costs to comply with this proposed AD and placed it in the AD Docket. You may get a copy of this summary by sending a request to us at the address listed under **ADDRESSES**. Include ''AD Docket FAA–2004–18606; Directorate Identifier 2004–CE–17–AD'' in your request.

List of Subjects in 14 CFR Part 39

Air transportation, Aircraft, Aviation safety, Safety.

The Proposed Amendment

Accordingly, under the authority delegated to me by the Administrator, the Federal Aviation Administration proposes to amend 14 CFR part 39 as follows:

PART 39—AIRWORTHINESS DIRECTIVES

1. The authority citation for part 39 continues to read as follows:

Authority: 49 U.S.C. 106(g), 40113, 44701.

§ 39.13 [Amended]

2. The FAA amends § 39.13 by adding the following new airworthiness directive (AD):

Bombardier Inc.: Docket No. FAA–2004–18606; Directorate Identifier 2004–CE–17–AD

When Os the Last Date I Can Submit Comments on This Proposed AD?

(a) We must receive comments on This proposed airworthiness directive (AD) by September 21, 2004.

What Other ADs Are Affected By This Action?

(b) None.

What Airplanes Are Affected by This AD?

(c) This AD affects the following airplane models and serial numbers that are certificated in any category: All Bombardier Inc. Model (Otter) DHC–3 airplanes incorporating 524085 BC, Ltd. Supplemental Type Certificate Number ST01243NY.

What Is the Unsafe Condition Presented in This AD?

(d) This AD is the result of one incident of structural failure of the elevator servo tab balance assembly. The actions specified in this AD are intended to prevent the structural failure of the elevator servo tab, which could lead to loss of control of the airplane.

What Must I Do To Address This Problem?

(e) To address this problem, you must do the following:

Actions	Compliance	Procedures
(1) Replace the elevator servo tab assembly, consisting of the following Part Numbers (P/N), with the redesigned elevator servo tab assembly, P/N V3TE1137–1: (i) P/N C3TE13–12 (ii) P/N VALTOC1136–2 (iii) P/N NAS40–2A–LT	Replace the elevator servo tab assembly within 300 hours time-in-service (TIS) after the effective date of this AD.	Follow Viking Air Ltd. Service Bulletin V3/01, dated March 6, 2002.
(2) Balance the servo tab assembly to achieve a nose heavy static moment within the limits set by Viking Air Ltd. Service Bulletin V3/01, dated March 6, 2002	After installation of the redesigned servo tab assembly, balance prior to further flight.	Follow Viking Air Ltd. Service Bulletin V3/01, dated March 6, 2002.
(3) Do not install any of the following part numbers: (i) P/N C3TE13–12 (ii) P/N VALTOC1136–2 (iii) P/N NAS40–2A–LT	The part numbers should not be installed as of the effective date of this AD.	Not applicable.

May I Request an Alternative Method of Compliance?

(f) You may request a different method of compliance or a different compliance time for this AD by following the procedures in 14 CFR 39.19. Unless FAA authorizes otherwise, send your request to your principal inspector. The principal inspector may add comments and will send your request to the Manager, Standards Office, Small Airplane Directorate, FAA. For information on any already approved alternative methods of compliance, contact David Lawson, Aerospace Engineer, ANE–171, New York Aircraft Certification Office, 1600 Stewart Ave., Suite 410, Westbury, NY 11590; telephone: 516–228–7327; facsimile: 516–794–5531.

May I Get Copies of the Documents Referenced in This AD?

(g) You may get copies of the documents referenced in this AD from Bombardier Inc., Regional Aircraft, 123 Garratt Boulevard, Downsview, Ontario, Canada M3K 1Y5. You may view the AD docket at the Docket Management Facility; U.S. Department of Transportation, 400 Seventh Street, SW., Nassif Building, Room PL–401, Washington, DC, or on the Internet at *http://dms.dot.gov.*

Is There Other Information That Relates to This Subject?

(h) Transport Canada Airworthiness Directive Number CF–2002–48, dated November 21, 2002, and Viking Air Ltd. Service Bulletin Number V3/01, dated March 6, 2002, also address the subject of this AD.

Issued in Kansas City, Missouri, on July 22, 2004.

Dorenda D. Baker,

Manager, Small Airplane Directorate, Aircraft Certification Service.

[FR Doc. 04–17285 Filed 7–28–04; 8:45 am]

BILLING CODE 4910–13–P

DEPARTMENT OF TRANSPORTATION

Federal Aviation Administration

14 CFR Part 39

[Docket No. 99–NE–41–AD]

RIN 2120–AA64

Airworthiness Directives; General Electric Company (GE) CF6–80A1/A3 and CF6–80C2A Series Turbofan Engines, Installed on Airbus Industrie A300–600 and A310 Series Airplanes

AGENCY: Federal Aviation Administration (FAA), DOT.

ACTION: Notice of proposed rulemaking (NPRM).

SUMMARY: The FAA proposes to supersede an existing airworthiness directive (AD) for GE CF6–80A1/A3 and CF6–80C2A series turbofan engines. That AD currently requires one of the following before further flight:

- Performing a directional pilot valve (DPV) pressure check for leakage, and, if necessary, replacing the DPV assembly with a serviceable assembly, or
- Replacing the DPV assembly with a serviceable assembly, or
- Deactivating the thrust reverser, and revising the FAA-approved airplane flight manual (AFM) to require applying performance penalties for certain takeoff conditions if a thrust reverser is deactivated.

That AD also requires revising the Emergency Procedures Section of the FAA-approved AFM to include a flight crew operational procedure in the event of any indication of an in-flight thrust reverser deployment. This proposed AD would require the same requirements for leak checks, but would increase the interval between required checks. This proposed AD would also remove the requirement to revise the Limitations Section and the Emergency Procedures Section of the applicable AFM when deactivating one or both thrust reversers. This proposed AD results from revisions to the manufacturer's alert service bulletins (ASBs). We are proposing this AD to prevent inadvertent thrust reverser deployment, which, if it occurs in-flight, could result in loss of control of the airplane.

DATES: We must receive any comments on this proposed AD by September 27, 2004.

ADDRESSES: Use one of the following addresses to submit comments on this proposed AD:

- By mail: Federal Aviation Administration (FAA), New England Region, Office of the Regional Counsel, Attention: Rules Docket No. 99–NE–41–AD, 12 New England Executive Park, Burlington, MA 01803–5299.
- By fax: (781) 238–7055.
- By e-mail: *9-ane-adcomment@faa.gov*.

You can get the service information identified in this proposed AD from Middle River Aircraft Systems, Mail Point 46, 103 Chesapeake Park Plaza, Baltimore, MD 21220–4295, attn: Product Support Engineering; telephone (410) 682–0093, fax (410) 682–0100.

You may examine the AD docket at the FAA, New England Region, Office of the Regional Counsel, 12 New England Executive Park, Burlington, MA.

FOR FURTHER INFORMATION CONTACT: Karen Curtis, Aerospace Engineer, Engine Certification Office, FAA, Engine and Propeller Directorate, 12 New England Executive Park, Burlington, MA 01803–5299; telephone (781) 238–7192; fax (781) 238–7199.

SUPPLEMENTARY INFORMATION:

Comments Invited

We invite you to submit any written relevant data, views, or arguments regarding this proposal. Send your comments to an address listed under

ADDRESSES. Include ''AD Docket No. 99–NE–41–AD'' in the subject line of your comments. If you want us to acknowledge receipt of your mailed comments, send us a self-addressed, stamped postcard with the docket number written on it; we will date-stamp your postcard and mail it back to you. We specifically invite comments on the overall regulatory, economic, environmental, and energy aspects of the proposed AD. If a person contacts us verbally, and that contact relates to a substantive part of this proposed AD, we will summarize the contact and place the summary in the docket. We will consider all comments received by the closing date and may amend the proposed AD in light of those comments.

We are reviewing the writing style we currently use in regulatory documents. We are interested in your comments on whether the style of this document is clear, and your suggestions to improve the clarity of our communications that affect you. You may get more information about plain language at *http://www.faa.gov/language* and *http://www.plainlanguage.gov*.

Examining the AD Docket

You may examine the AD Docket (including any comments and service information), by appointment, between 8 a.m. and 4:30 p.m., Monday through Friday, except Federal holidays. See **ADDRESSES** for the location.

Discussion

On August 26, 1999, the FAA issued AD 99–18–19, Amendment 39–11285; (64 FR 48277, September 23, 1999). That AD requires:

- Before further flight, performing a DPV pressure check for leakage, and, if necessary, replacing the DPV assembly with a serviceable assembly and performing an operational check of the thrust reverser, or
- Before further flight, replacing the DPV assembly with a serviceable assembly and performing an operational check of the thrust reverser, or
- Before further flight, deactivating the thrust reverser and revising the FAA-approved AFM for airplanes equipped with these engines to require performance penalties for certain takeoff conditions if a thrust reverser is deactivated.
- Thereafter, that AD requires one of those actions at intervals not to exceed 700 hours time-in-service; and
- Before further flight, revising the Emergency Procedures Section of the FAA approved AFM to include a flight crew operational procedure in the event of any indication of an in-flight thrust reverser deployment.

That AD was the result of a report of inadvertent thrust reverser deployment on an Airbus Industrie A300–600 series airplane powered by Pratt & Whitney engines. That condition, if not corrected, could result in inadvertent thrust reverser deployment, which, if it occurs in-flight, could result in loss of control of the airplane.

Actions Since AD 99–18–19 Was Issued

Since we issued that AD, Airbus Industrie, the airplane manufacturer, revised the master minimum equipment list (MMEL) to include procedures for operating the airplane with the thrust reversers deactivated, and revised the AFM to include procedures for emergency operation if the thrust reversers deploy while in flight. Also, the engine manufacturer has recommended extending the interval between inspecting or replacing the DPV.

Relevant Service Information

We have reviewed and approved the technical contents of Middle River Aircraft Systems Alert Service Bulletin (ASB) CF6–80C2A SB 78A1081, Revision 2, dated September 17, 2003; and ASB CF6–80A1/A3 SB 78A4022, Revision 2, dated September 17, 2003; that describe procedures for performing the leak check on the DPV and for performing a fan reverser operational check.

FAA's Determination and Requirements of the Proposed AD

We have evaluated all pertinent information and identified an unsafe condition that is likely to exist or develop on other products of this same type design. Therefore, we are proposing this AD, which would require:

- Before further flight, performing an initial leak check on the DPV, or
- Before further flight, replacing the DPV with a serviceable DPV, or
- Before further flight, deactivating the thrust reverser, and
- Repeating the above requirements at intervals within 1,400 hours TIS since the last action.

The proposed AD would require that you do these actions using the service information described previously.

Costs of Compliance

There are about 544 engines of the affected design in the worldwide fleet. We estimate that 192 engines installed on airplanes of U.S. registry would be affected by this proposed AD. We also estimate that it would take about 1 work hour per engine to perform the proposed actions (about 227 per year), and that the average labor rate is $65 per work hour. Required parts would cost approximately $12,000 per engine. We estimate that operators would replace 9 percent of the existing DPVs. Based on these figures, we estimate the total cost of the proposed AD to U.S. operators to be $259,915.

Regulatory Findings

We have determined that this proposed AD would not have federalism implications under Executive Order 13132. This proposed AD would not have a substantial direct effect on the States, on the relationship between the national Government and the States, or on the distribution of power and responsibilities among the various levels of government.

For the reasons discussed above, I certify that the proposed regulation:

1. Is not a ''significant regulatory action'' under Executive Order 12866;
2. Is not a ''significant rule'' under the DOT Regulatory Policies and Procedures (44 FR 11034, February 26, 1979); and
3. Would not have a significant economic impact, positive or negative, on a substantial number of small entities under the criteria of the Regulatory Flexibility Act.

We prepared a summary of the costs to comply with this proposal and placed it in the AD Docket. You may get a copy of this summary by sending a request to us at the address listed under **ADDRESSES**. Include ''AD Docket No. 99–NE–41–AD'' in your request.

List of Subjects in 14 CFR Part 39

Air transportation, Aircraft, Aviation safety, Safety.

The Proposed Amendment

Accordingly, under the authority delegated to me by the Administrator, the Federal Aviation Administration proposes to amend 14 CFR part 39 as follows:

PART 39—AIRWORTHINESS DIRECTIVES

1. The authority citation for part 39 continues to read as follows:

Authority: 49 U.S.C. 106(g), 40113, 44701.

§ 39.13 [Amended]

2. The FAA amends § 39.13 by removing Amendment 39–11285 (64 FR 48277, September 23, 1999) and by adding a new airworthiness directive to read as follows:

General Electric Company: Docket No. 99–NE–41–AD. Supersedes AD 99–18–19, Amendment 39–11285.

Comments Due Date

(a) The Federal Aviation Administration (FAA) must receive comments on this airworthiness directive (AD) action by September 27, 2004.

Affected ADs

(b) This AD supersedes AD 99–18–19, Amendment 39–11285.

Applicability

(c) This AD applies to General Electric Company (GE) CF6–80A1/A3 and CF6–80C2A series turbofan engines. These engines are installed on, but not limited to, Airbus Industrie A300–600 and A310 series airplanes.

Unsafe Condition

(d) This AD results from revisions to the manufacturer's alert service bulletins (ASBs). We are issuing this AD to prevent inadvertent thrust reverser deployment, which, if it occurs in-flight, could result in loss of control of the airplane.

Compliance

(e) You are responsible for having the actions required by this AD performed within the compliance times specified unless the actions have already been done.

Credit for Initial Actions

(f) Performing the initial actions using Middle River Aircraft Systems (MRAS) Alert Service Bulletin (ASB) CF6–80A1/A3 SB 78A4022, Revision 2, dated September 17, 2003, or earlier revision or MRAS ASB CF6–80C2A SB 78A1081, Revision 2, dated September 17, 2003, or earlier revision, satisfies the requirements of paragraphs (g) and (i) of this AD.

GE CF6–80A1/A3 Series Engines Initial Actions

(g) For GE CF6–80A1/A3 series engines, do either (g)(1) or (g)(2) of this AD.

(1) Before further flight, perform a pressure check of the directional pilot valve (DPV) for leakage. Use 2.B.(1) through 2.B.(12) of the Accomplishment Instructions of MRAS ASB CF6–80A1/A3 SB 78A4022, Revision 2, dated September 17, 2003, and if necessary, do either of the following:

(i) Replace the DPV assembly with a serviceable assembly and perform an operational check of the thrust reverser. Use 2.C.(1) through 2.C.(7) of the Accomplishment Instructions of MRAS ASB CF6–80A1/A3 SB 78A4022, Revision 2, dated September 17, 2003, or

(ii) Deactivate the thrust reverser and do the following:

(A) Replace the DPV with a serviceable DPV within 10 calendar days.

(B) Perform an operational check of the thrust reverser. Use 2.C.(1) through 2.C.(7) of the Accomplishment Instructions of MRAS ASB CF6–80A1/A3 SB 78A4022, Revision 2, dated September 17, 2003.

(2) Before further flight, replace the DPV assembly with a serviceable assembly, and perform an operational check of the thrust reverser. Use 2.C.(1) through 2.C.(7) of the Accomplishment Instructions of MRAS ASB CF6–80A1/A3 SB 78A4022, Revision 2, dated September 17, 2003.

GE CF6–80A1/A3 Series Engines Repetitive Actions

(h) For GE CF6–80A1/A3 series engines, do either (h)(1) or (h)(2) of this AD within 1,400 hours time-in-service (TIS) since the last action.

(1) Perform a pressure check of the DPV for leakage. Use 2.B.(1) through 2.B.(12) of the Accomplishment Instructions of MRAS ASB CF6–80A1/A3 SB 78A4022, Revision 2, dated September 17, 2003, and if necessary, do either of the following:

(i) Replace the DPV assembly with a serviceable assembly and perform an operational check of the thrust reverser. Use 2.C.(1) through 2.C.(7) of the Accomplishment Instructions of MRAS ASB CF6–80A1/A3 SB 78A4022, Revision 2, dated September 17, 2003, or

(ii) Deactivate the thrust reverser and do the following:

(A) Replace the DPV with a serviceable DPV within 10 calendar days.

(B) Perform an operational check of the thrust reverser. Use 2.C.(1) through 2.C.(7) of the Accomplishment Instructions of MRAS ASB CF6–80A1/A3 SB 78A4022, Revision 2, dated September 17, 2003.

(2) Replace the DPV assembly with a serviceable assembly, and perform an operational check of the thrust reverser. Use 2.C.(1) through 2.C.(7) of the Accomplishment Instructions of MRAS ASB CF6–80A1/A3 SB 78A4022, Revision 2, dated September 17, 2003.

GE CF6–80C2A Series Engines Initial Actions

(i) For GE CF6–80C2A series engines, do either (i)(1) or (i)(2) of this AD.

(1) Before further flight, perform a pressure check of the directional pilot valve (DPV) for leakage. Use 2.B.(1) through 2.B.(12) of the Accomplishment Instructions of MRAS ASB CF6–80C2A SB 78A1081, Revision 2, dated September 17, 2003, and if necessary, do either of the following:

(i) Replace the DPV assembly with a serviceable assembly and perform an operational check of the thrust reverser. Use 2.C.(1) through 2.C.(5) of the Accomplishment Instructions of MRAS ASB CF6–80C2A SB 78A1081, Revision 2, dated September 17, 2003, or

(ii) Deactivate the thrust reverser and do the following:

(A) Replace the DPV with a serviceable DPV within 10 calendar days.

(B) Perform an operational check of the thrust reverser. Use 2.C.(1) through 2.C.(5) of the Accomplishment Instructions of MRAS ASB CF6–80C2A SB 78A1081, Revision 2, dated September 17, 2003.

(2) Before further flight, replace the DPV assembly with a serviceable assembly, and perform an operational check of the thrust reverser. Use 2.C.(1) through 2.C.(5) of the Accomplishment Instructions of MRAS ASB CF6–80C2A SB 78A4022, Revision 2, dated September 17, 2003.

GE CF6–80C2A Series Engines Repetitive Actions

(j) For GE CF6–80C2A series engines, do either (j)(1) or (j)(2) of this AD within 1,400 hours TIS since the last action.

(1) Perform a pressure check of the DPV for leakage. Use 2.B.(1) through 2.B.(12) of the Accomplishment Instructions of MRAS ASB CF6–80C2A SB 78A1081, Revision 2, dated September 17, 2003, and if necessary, do either of the following:

(i) Replace the DPV assembly with a serviceable assembly and perform an operational check of the thrust reverser. Use 2.C.(1) through 2.C.(5) of the Accomplishment Instructions of MRAS ASB CF6–80C2A SB 78A1081, Revision 2, dated September 17, 2003, or

(ii) Deactivate the thrust reverser and do the following:

(A) Replace the DPV with a serviceable DPV within 10 calendar days.

(B) Perform an operational check of the thrust reverser. Use 2.C.(1) through 2.C.(5) of the Accomplishment Instructions of MRAS ASB CF6–80C2A SB 78A1081, Revision 2, dated September 17, 2003.

(2) Replace the DPV assembly with a serviceable assembly, and perform an operational check of the thrust reverser. Use 2.C.(1) through 2.C.(5) of the Accomplishment Instructions of MRAS ASB CF6–80C2A SB 78A1081, Revision 2, dated September 17, 2003.

Definition of Serviceable DPV Assembly

(k) For the purpose of this AD, a serviceable DPV assembly is:

(1) An assembly that has accumulated zero time in service, or

(2) An assembly that has accumulated zero time in service after having passed the tests in the MRAS Component Maintenance Manual GEK 85007 (78–31–51), Revision No. 6 or later, Directional Pilot Valve, Page Block 101, Testing and Troubleshooting, or

(3) An assembly that has been successfully leak checked using Paragraph 2.B. of the Accomplishment Instructions of MRAS ASB No. 78A4022, Revision 2, dated September 17, 2003, or earlier revision, or ASB No. 78A1081, Revision 2, dated September 17, 2003, or earlier revision, as applicable, immediately before installation on the airplane.

Alternative Methods of Compliance

(l) The Manager, Engine Certification Office, has the authority to approve alternative methods of compliance for this AD if requested using the procedures found in 14 CFR 39.19.

Material Incorporated by Reference

(m) None.

Related Information

(n) None.

Issued in Burlington, Massachusetts, on July 22, 2004.

Francis A. Favara,

Acting Manager, Engine and Propeller Directorate, Aircraft Certification Service.

[FR Doc. 04–17284 Filed 7–28–04; 8:45 am]

BILLING CODE 4910–13–P

DEPARTMENT OF DEFENSE

Department of the Army; Corps of Engineers

33 CFR Part 334

RIN 0710–AA57

United States Marine Corps Restricted Area and Danger Zone, Brickyard Creek and Tributaries, and the Broad River, Marine Corps Air Station, Beaufort, SC

AGENCY: United States Army Corps of Engineers, DoD.

ACTION: Notice of Proposed Rulemaking and request for comments.

SUMMARY: The Corps of Engineers is proposing regulations to establish a restricted area and one danger zone in Brickyard Creek (including a portion of the Atlantic Intracoastal Waterway), Mulligan Creek, Albergottie Creek and Salt Creek in the vicinity of the Marine Corps Air Station (MCAS) in Beaufort, South Carolina. The MCAS restricted area will contain six sections that are contiguous to Brickyard, Albergottie and Salt Creeks, and two sections that are located on the northern border of the MCAS that encompasses Mulligan Creek. In addition, the proposed regulations will establish a restricted area in the Broad River in the vicinity of Laurel Bay Military Family Housing Area, which is associated with the Marine Corps Air Station. The purpose of these regulations is to provide effective security in the vicinity of the Marine Corps Air Station and the Laurel Bay Military Family Housing Area and to protect the public from the hazards of small arms fire within the Danger Zone.

DATES: Comments must be received on or before August 30, 2004.

ADDRESSES: Send comments to U. S. Army Corps of Engineers, Attn: CECW–O 441 G Street, NW., Washington, DC 20314–1000.

FOR FURTHER INFORMATION CONTACT: Mr. Frank Torbett, Headquarters, U.S Army Corps of Engineers, Washington, DC, at (202) 761–7610, or Mr. Dean Herndon, Corps of Engineers, Charleston District, at (843) 329–8044.

SUPPLEMENTARY INFORMATION: Pursuant to its authorities in section 7 of the Rivers and Harbors Act of 1917 (40 Stat 266; 33 U.S.C. 1) and chapter XIX, of the Army Appropriations Act of 1919 (40 Stat 892; 33 U.S.C. 3) the Corps proposes to amend the restricted area regulations at 33 CFR 334 by adding Section 334.475, which would establish a restricted area (including eight sections) and one danger zone in the vicinity of the Marine Corps Air Station and one restricted area in the vicinity of the Laurel Bay Military Family Housing Area in Beaufort, South Carolina. The sections of the restricted area are described in detail in the regulation below and identified as (a)(1) through (a)(9). The proposed danger zone will encompass an area to be used as a firing range for small arms and is listed as (a)(10). The public currently has unrestricted access to navigable waters adjacent to the Marine Corps Air Station and the Laurel Bay Military Family Housing Area. The Commander, Marine Corps Air Bases, Eastern Area is seeking authorization from the Corps of Engineers to establish restricted areas in waters of the United States adjacent to the Marine Corps Air Station and Laurel Bay Military Family Housing Area in Beaufort, South Carolina. The District Engineer's preliminary review indicates that this request is not contrary to the public interest.

Procedural Requirements

a. Review Under Executive Order 12866

This proposed rule is issued with respect to a military function of the Defense Department and the provisions of Executive Order 12866 do not apply.

b. Review Under the Regulatory Flexibility Act

These proposed rules have been reviewed under the Regulatory Flexibility Act (Pub. L. 96–354), which requires the preparation of a regulatory flexibility analysis for any regulation that will have a significant economic impact on a substantial number of small entities (*i.e.*, small businesses and small Governments). The Corps expects that the economic impact of the establishment of this restricted area would have practically no impact on the public, no anticipated navigational hazard or interference with existing waterway traffic and accordingly, certifies that this proposal if adopted, will have no significant economic impact on small entities.

c. Review Under the National Environmental Policy Act

An environmental assessment has been prepared for this action. We have concluded, based on the minor nature of the proposed additional restricted area regulations, that this action, if adopted, will not have a significant impact to the quality of the human environment, and preparation of an environmental impact statement is not required. The environmental assessment may be reviewed at the District office listed at the end of **FOR FURTHER INFORMATION CONTACT**, above.

d. Unfunded Mandates Act

This proposed rule does not impose an enforceable duty among the private sector and, therefore, is not a Federal private sector mandate and is not subject to the requirements of section 202 or 205 of the Unfunded Mandates Act. We have also found under section 203 of the Act, that small Governments will not be significantly and uniquely affected by this rulemaking.

List of Subjects in 33 CFR Part 334

Danger zones, Marine safety, Restricted areas, Waterways.

For the reasons set out in the preamble, the Corps of Engineers proposes to amend 33 CFR part 334 as follows:

PART 334—DANGER ZONES AND RESTRICTED AREA REGULATIONS

1. The authority citation for part 334 continues to read as follows:

Authority: 40 Stat. 266; (33 U.S.C. 1) and 40 Stat. 892; (33 U.S.C. 3).

2. Section 334.475 would be added to read as follows:

§ 334.475 Brickyard Creek and tributaries and the Broad River at Beaufort, SC.

(a) *The areas:* (1) That section of the Atlantic Intracoastal Waterway (AIWW), beginning at the confluence of the AIWW and Albergottie Creek, being that point on the west side of the AIWW navigational channel at latitude (lat) 32.457226°, longitude (long) 80.687770°, thence continuing in a northerly direction along the western channel edge of the AIWW to lat. 32.458580°, long. 80.689181°, thence to lat. 32.460413°, long. 80.689228°, thence to lat. 32.461459°, long. 80.689418°, thence to lat. 32.464015°, long. 80.690294°, thence to lat. 32.470255°, long. 80.690965°, thence to lat. 32.471309°, long. 80.691196°, thence to lat. 32.475084°, long. 80.692455°, thence to lat. 32.478161°, long. 80.691546°, thence to lat. 32.479191°, long. 80.691486°, thence to lat. 32.481817°, long. 80.691939°, thence to lat. 32.493001°, long. 80.689835°, thence to lat. 32.494422°, long. 80.688296°, thence to lat. 32.49727°, long. 80.69172° on the east shore of the Marine Corps Air Station (MCAS), at its intersection with the Station's property boundary line, thence heading south along the eastern shoreline of the MCAS to a point along the northern shoreline of Mulligan Creek at lat. 32.48993°, long. 80.69836°, thence southwesterly across Mulligan

Creek to the shoreline of the MCAS, lat. 32.48771°, long. 80.70424°, thence continuing along the eastern shoreline to its intersection with Albergottie Creek, lat. 32.45360°, long. 80.70128, thence continuing along the southern shoreline of the MCAS to the intersection of Salt Creek with U.S. Highway 21, lat. 32.45047°, long. 80.73153°, thence back down the southern creek edge of Salt and Albergottie Creeks, thence back to the starting point at the confluence of Albergottie Creek and the AIWW, lat. 32.457226°, long. 80.687770°. **Note:** Situated within the boundaries of the area described in paragraph (a)(1) of this section are the areas described in paragraphs (a)(2), (a)(3), (a)(4), (a)(5) and the danger zone described in paragraph (a)(10) of this section. Since additional regulations apply to these sections, they are excluded from the area described in paragraph (a)(1) given that they are more strictly regulated.

(2) That portion of Mulligan Creek located on the southern side of the MCAS runway, beginning at a point on the eastern shoreline of Mulligan Creek at lat. 32.48993°, long. 80.69836°, thence southwesterly across Mulligan Creek to the shoreline of the MCAS, lat. 32.48771°, long. 80.70424°, thence continuing in a northerly direction along the eastern shoreline of the MCAS, thence in a northeasterly direction along the southern side of the MCAS runway, thence back down the eastern shoreline of Mulligan Creek to its starting point, lat. 32.48993°, long. 80.69836°.

(3) That area adjacent to the Atlantic Intracoastal Waterway (AIWW), situated within the boundaries of the area described in paragraph (a)(1) of this section, beginning at a point on the west side of the AIWW navigational channel at lat. 32.463732°, long. 80.690208°, thence continuing in a northerly direction along the western channel edge of the AIWW to lat. 32.467999°, long. 80.690749°, thence turning in a westerly direction and continuing to lat. 32.467834°, long. 80.700080°, on the eastern shore of the MCAS, thence heading in a southward direction along the shoreline to lat. 32.463692°, long. 80.698440°, thence turning in a westerly direction and returning back to the starting point on the west edge of the AIWW channel, lat. 32.463732°, long. 80.690208°.

(4) That area contiguous to Albergottie Creek, situated within the boundaries of the area described in paragraph (a)(1) of this section, beginning at a point on the southern shoreline of the MCAS at lat. 32.452376°, long. 80.708263°, thence continuing in a northerly direction along the shoreline, up to the shoreline adjacent to Kimes Avenue and back down the opposite shoreline in a southerly direction to a point at lat. 32.450643°, long. 80.715653°, thence turning in an easterly direction and returning back to the starting point at lat. 32.452376°, long. 80.708263°.

(5) That area contiguous to Salt Creek, situated within the boundaries of the area described in paragraph (a)(1) of this section, beginning at a point on the southern shoreline of the MCAS and the edge of Salt Creek at lat. 32.45194°, long. 80.724473°, thence continuing in a northerly direction along the shoreline of the MCAS and continuing on to its intersection again with Salt Creek and adjacent to U.S. Highway 21, thence turning and continuing along the shoreline of Salt Creek in an easterly direction and returning back to the starting point at lat. 32.45194°, long. 80.724473°.

(6) That section of the Atlantic Intracoastal Waterway (AIWW), beginning at the confluence of the AIWW and Albergottie Creek, being that point on the west side of the AIWW navigational channel at latitude (lat) 32.457226°, longitude (long) 80.687770°, thence continuing in a northerly direction along the western channel edge of the AIWW to lat. 32.458580°, long. 80.689181°, thence to lat. 32.460413°, long. 80.689228°, thence to lat. 32.461459°, long. 80.689418°, thence to lat. 32.464015°, long. 80.690294°, thence to lat. 32.470255°, long. 80.690965°, thence to lat. 32.471309°, long. 80.691196°, thence to lat. 32.475084°, long. 80.692455°, thence to lat. 32.478161°, long. 80.691546°, thence to lat. 32.479191°, long. 80.691486°, thence to lat. 32.481817°, long. 80.691939°, thence to lat. 32.493001°, long. 80.689835°, thence to lat. 32.494422°, long. 80.688296°, thence crossing the AIWW channel in a southeasterly direction to a point on the east side of the AIWW and the marsh edge of bank, lat. 32.49343°, long. 80.68699°, thence southward along the edge of the AIWW and the waterward marsh edge of Ladies Island to a point on the west shoreline of Pleasant Point Peninsular, lat. 32.45806°, long. 80.68668°, thence back across the AIWW navigational channel to the point of beginning, lat. 32.457226°, long. 80.687770°.

(7) That portion of Mulligan Creek, beginning at its northern mouth and confluence with McCalleys Creek, lat. 32.50763°, long. 80.69337°, thence proceeding in a westerly direction along the northern shoreline of Mulligan Creek to its intersection with Perryclear Drive bridge crossing, lat. 32.50534°, long. 80.69960°, thence back down the southern shoreline to its starting point at McCalleys Creek, lat. 32.50763°, long. 80.69337°.

(8) That portion of Mulligan Creek, beginning at the Perryclear Drive bridge crossing, lat. 32.50534°, long. 80.69960°, thence proceeding in a southwesterly direction along the northern shoreline of Mulligan Creek to the terminus of its western tributary, thence back down its southern shoreline to the terminus of its eastern terminus located at the northern end on the MCAS runway, lat. 32.49531°, long. 80.70658°, thence back down the southern shoreline to its starting point at Perryclear Drive bridge crossing, lat. 32.50534°, long. 80.69960°.

(9) (Laurel Bay Military Family Housing Area) That section of the Broad River, beginning on the western shoreline of Laurel Bay Military Family Housing Area boundary line, at lat. 32.449295°, long. 80.803205°, thence proceeding in a northerly direction along the shoreline to the housing area northern boundary line at lat. 32.471172°, long. 80.809795°, thence proceeding a distance of 500′ into the Broad River, lat. 32.471185°, long. 80.811440°, thence proceeding in a southerly direction and maintaining a distance of 500′ from the shoreline to lat. 32.449222°, long. 80.804825°, thence back towards the shoreline to the point of beginning at lat. 32.449295°, long. 80.803205°.

(10) (Danger zone). That portion of Mulligan Creek located adjacent to the MCAS firing range and the restricted area described in paragraph (a)(4) of this section, beginning at a point on the western shoreline of Mulligan Creek at lat. 32.48771°, long. 80.70424°, thence northeasterly across Mulligan Creek to the opposite shoreline at lat. 32.48993°, long. 80.69836°, thence continuing in a southeasterly direction to an upland island bordering the northern shoreline of Mulligan Creek at lat. 32.48579°, long. 80.69706°, thence turning in a southwesterly direction and crossing Mulligan Creek to a point on the eastern shoreline of the MCAS at lat. 32.48533°, long. 80.70240°, thence continuing along the eastern shoreline of the MCAS to its starting point at lat. 32.48771°, long. 80.70424°.

(b) *The Regulation:* (1) Unauthorized personnel, vessels and other watercraft shall not enter the restricted areas described in paragraphs (a)(2), (a)(3), (a)(4), (a)(5) and (a)(8) of this section at any time.

(2) The public shall have unrestricted access and use of the waters described in paragraph (a)(6) of this section whenever the MCAS is in Force Protection Condition Normal, Alpha or

Bravo. Whenever the facility is in Force Protection Condition Charlie or Delta, personnel, vessels and other watercraft entering the restricted area described in paragraph (a)(6) of this section shall proceed at normal speed and shall under no circumstances anchor, fish, loiter or photograph in any way until clear of the restricted area.

(3) The public shall have unrestricted access and use of the waters described in paragraphs (a)(1), (a)(7) and (a)(9) of this section whenever the MCAS is in Force Protection Condition Normal Alpha or Bravo. Whenever the facility is in Force Protection Condition Charlie or Delta, personnel, vessels and other watercraft are prohibited from entering the waters described in paragraphs (a)(1), (a)(7) and (a)(9) of this section, unless they first obtain an escort or other approval from the Commander, MCAS, Beaufort, South Carolina.

(4) Unauthorized personnel, vessels and other watercraft shall not enter the danger zone described in paragraph (a)(10) of this section at any time.

(5) All restricted areas and danger zones will be marked with suitable warning signs.

(6) It is understood that none of the restrictions herein will apply to properly marked Federal vessels performing official duties.

(7) It is further understood that unauthorized personnel will not take photographs from within the above described restricted areas.

(c) *Enforcement:* The regulation in this section, promulgated by the United States Army Corps of Engineers, shall be enforced by the Commanding Officer, MCAS Beaufort, or persons or agencies as he/she may authorize including any Federal Agency, State, Local or County Law Enforcement agency, or Private Security Firm in the employment of the facility, so long as the entity undertaking to enforce this Restricted Area has the legal authority to do so under the appropriate Federal, State or local laws.

Dated: June 29, 2004.

Michael B. White,

Chief, Operations, Directorate of Civil Works.

[FR Doc. 04–16923 Filed 7–28–04; 8:45 am]

BILLING CODE 3710–92–P

ENVIRONMENTAL PROTECTION AGENCY

40 CFR Part 70

[R07–OAR–2004–KS–0001; FRL–7793–7]

Approval and Promulgation of Operating Permits Program; State of Kansas

AGENCY: Environmental Protection Agency (EPA).

ACTION: Proposed rule.

SUMMARY: EPA is proposing approval of revisions to the Kansas Operating Permits Program. On April 22, 2004, the state of Kansas requested a revision for the purpose of increasing emission fees for the Title V Operating Permits Program, revising the late fee provisions, and other minor revisions.

DATES: Comments on this proposed action must be received in writing by August 30, 2004.

ADDRESSES: Comments may be mailed to Heather Hamilton, Environmental Protection Agency, Air Planning and Development Branch, 901 North 5th Street, Kansas City, Kansas 66101. Comments may also be submitted electronically or through hand delivery/courier; please follow the detailed instructions in the Addresses section of the direct final rule which is located in the rules section of this **Federal Register**.

FOR FURTHER INFORMATION CONTACT: Heather Hamilton at (913) 551–7039,or by e-mail at *hamilton.heather@epa.gov.*

SUPPLEMENTARY INFORMATION: In the final rules section of the **Federal Register**, EPA is approving the state's revision to the operating permits program as a direct final rule without prior proposal because the Agency views this as a noncontroversial revision amendment and anticipates no relevant adverse comments to this action. A detailed rationale for the approval is set forth in the direct final rule. If no relevant adverse comments are received in response to this action, no further activity is contemplated in relation to this action. If EPA receives relevant adverse comments, the direct final rule will be withdrawn and all public comments received will be addressed in a subsequent final rule based on this proposed action. EPA will not institute a second comment period on this action. Any parties interested in commenting on this action should do so at this time. Please note that if EPA receives adverse comment on part of this rule and if that part can be severed from the remainder of the rule, EPA may adopt as final those parts of the rule that are not the subject of an adverse comment. For additional information, see the direct final rule which is located in the rules section of this **Federal Register**.

Dated: July 14, 2004.

U. Gale Hutton,

Acting Regional Administrator, Region 7.

[FR Doc. 04–17295 Filed 7–28–04; 8:45 am]

BILLING CODE 6560–50–P

ENVIRONMENTAL PROTECTION AGENCY

40 CFR Part 70

[R07–OAR–2004–IA–0002; FRL–7793–9]

Approval and Promulgation of Operating Permits Program; State of Iowa

AGENCY: Environmental Protection Agency (EPA).

ACTION: Proposed rule.

SUMMARY: EPA is proposing approval of a revision to the Iowa Operating Permits Program for the purpose of revising the definition of stationary source categories in the state rule. The revised definition will be consistent with the Federally-approved rules, including the provisions of the New Source Review Program and with EPA's major source definition.

DATES: Comments on this proposed action must be received in writing by August 30, 2004.

ADDRESSES: Comments may be mailed to Heather Hamilton, Environmental Protection Agency, Air Planning and Development Branch, 901 North 5th Street, Kansas City, Kansas 66101. Comments may also be submitted electronically or through hand delivery/courier; please follow the detailed instructions in the **ADDRESSES** section of the direct final rule which is located in the rules section of this **Federal Register**.

FOR FURTHER INFORMATION CONTACT: Heather Hamilton at (913) 551–7039, or by e-mail at *hamilton.heather@epa.gov.*

SUPPLEMENTARY INFORMATION: In the final rules section of the **Federal Register**, EPA is approving the state's revision to the operating permits program as a direct final rule without prior proposal because the Agency views this as a noncontroversial revision amendment and anticipates no relevant adverse comments to this action. A detailed rationale for the approval is set forth in the direct final rule. If no relevant adverse comments are received in response to this action,

no further activity is contemplated in relation to this action. If EPA receives relevant adverse comments, the direct final rule will be withdrawn and all public comments received will be addressed in a subsequent final rule based on this proposed action. EPA will not institute a second comment period on this action. Any parties interested in commenting on this action should do so at this time. Please note that if EPA receives adverse comment on part of this rule and if that part can be severed from the remainder of the rule, EPA may adopt as final those parts of the rule that are not the subject of an adverse comment. For additional information, see the direct final rule which is located in the rules section of this **Federal Register**.

Dated: July 14, 2004.

U. Gale Hutton,

Acting Regional Administrator, Region 7.

[FR Doc. 04–17296 Filed 7–28–04; 8:45 am]

BILLING CODE 6560–50–P

FEDERAL COMMUNICATIONS COMMISSION

47 CFR Part 73

[DA 04–2101, MB Docket No. 04–253, RM–11007]

Digital Television Broadcast Service; Greeley, CO

AGENCY: Federal Communications Commission.

ACTION: Proposed rule.

SUMMARY: The Commission requests comments on a petition filed by Thomas Desmond proposing the allotment of DTV channel 45 to Greeley, Colorado, as the community's first local commercial television service. DTV Channel 45 can be allotted to Greeley at reference coordinates 40–25–15 N. and 104–31–30 W.

DATES: Comments must be filed on or before September 13, 2004, and reply comments on or before September 28, 2004.

ADDRESSES: The Commission permits the electronic filing of all pleadings and comments in proceeding involving petitions for rule making (except in broadcast allotment proceedings). *See Electronic Filing of Documents in Rule Making Proceedings*, GC Docket No. 97–113 (rel. April 6, 1998). Filings by paper can be sent by hand or messenger delivery, by commercial overnight courier, or by first-class or overnight U.S. Postal Service mail. The Commission's contractor, Natek, Inc., will receive hand-delivered or messenger-delivered paper filings for the Commission's Secretary at 236 Massachusetts Avenue, NE., Suite 110, Washington, DC 20002. The filing hours at this location are 8 a.m. to 7 p.m. All hand deliveries must be held together with rubber bands or fasteners. Any envelopes must be disposed of before entering the building. Commercial overnight mail (other than U.S. Postal Service Express Mail and Priority Mail) must be sent to 9300 East Hampton Drive, Capitol Heights, MD 20743. U.S. Postal Service first-class mail, Express Mail, and Priority Mail should be addressed to 445 12th Street, SW., Washington, DC 20554. All filings must be addressed to the Commission's Secretary, Office of the Secretary, Federal Communications Commission, Washington, DC 20554. In addition to filing comments with the FCC, interested parties should serve the petitioner, or its counsel or consultant, as follows: Thomas S. Desmond, 3216 Verbena Drive, Plano, Texas 75075 (Petitioner).

FOR FURTHER INFORMATION CONTACT: Pam Blumenthal, Media Bureau, (202) 418–1600.

SUPPLEMENTARY INFORMATION: This is a synopsis of the Commission's Notice of Proposed Rule Making, MB Docket No. 04–253, adopted July 12, 2004, and released July 23, 2004. The full text of this document is available for public inspection and copying during regular business hours in the FCC Reference Information Center, Portals II, 445 12th Street, SW., Room CY–A257, Washington, DC 20554. This document may also be purchased from the Commission's duplicating contractor, Best Copy and Printing, Inc., 445 12th Street, SW., Room CY–B402, Washington, DC 20554, telephone 301–816–2820, facsimile 301–816–0169, or via-e-mail *joshir@erols.com.*

Provisions of the Regulatory Flexibility Act of 1980 do not apply to this proceeding.

This document does not contain proposed information collection(s) subject to the Paperwork Reduction Act of 1995 (PRA), Public Law 104–13. In addition, therefore, it does not contain any new or modified ''information collection burden for small business concerns with fewer than 25 employees,'' pursuant to the Small Business Paperwork Relief Act of 2002, Public Law 107–198, *see* 44 U.S.C. 3506(c)(4).

Members of the public should note that from the time a Notice of Proposed Rule Making is issued until the matter is no longer subject to Commission consideration or court review, all *ex parte* contacts are prohibited in Commission proceedings, such as this one, which involve channel allotments. See 47 CFR 1.1204(b) for rules governing permissible *ex parte* contacts.

For information regarding proper filing procedures for comments, see 47 CFR 1.415 and 1.420.

List of Subjects in 47 CFR Part 73

Digital television broadcasting, Television.

For the reasons discussed in the preamble, the Federal Communications Commission proposes to amend 47 CFR Part 73 as follows:

PART 73—RADIO BROADCAST SERVICES

1. The authority citation for part 73 continues to read as follows:

Authority: 47 U.S.C. 154, 303, 334 and 336.

§ 73.622 [Amended]

2. Section 73.622(b), the Table of Digital Television Allotments under Colorado is amended by adding Greeley, DTV channel 45.

Federal Communications Commission.

Barbara A. Kreisman,

Chief, Video Division, Media Bureau.

[FR Doc. 04–17247 Filed 7–28–04; 8:45 am]

BILLING CODE 6712–01–P

FEDERAL COMMUNICATIONS COMMISSION

47 CFR Part 73

[DA 04–2130; MB Docket No. 04–203; RM–10976]

Radio Broadcasting Services; Broken Bow, Maxwell and McCook, NE

AGENCY: Federal Communications Commission.

ACTION: Proposed rule.

SUMMARY: This document sets forth a proposal to amend the FM Table of Allotments, Section 73.202(b) of the Commission's rules, 47 CFR § 73.202(b). The Audio Division requests comment on a petition and amendment to petition filed by McCook Radio Group, LLC, licensee of Station KRKU (FM), Channel 253C1, McCook, Nebraska. Petitioner proposes to delete Channel 253C1 at McCook, Nebraska, to allot Channel 253C1 at Maxwell, Nebraska, and to modify the license of Station KRKU (FM) accordingly. In order to accommodate this allotment, petitioner proposes to change the channel allotment for Station KBBN–FM, Broken Bow, Nebraska, from Channel 252C3 to

Channel 237C2. Custer County Broadcasting Co., Inc. the owner of Station KBBN–FM, has consented to the channel change at Broken Bow. Channel 253C1 can be allotted to Maxwell in compliance with the Commission's minimum distance separation requirements at center city coordinates with no site restriction. The coordinates for Channel 253C1 at Maxwell are 41–04–44 North Latitude and 100–31–28 West Longitude. The coordinates for Channel 237C2 at Broken Bow are 41–23–49 North Latitude and 99–37–02 West Longitude, with a site restriction of 1.91 km (1.2 miles) east of Broken Bow. *See* **SUPPLEMENTARY INFORMATION** *infra*.

DATES: Comments must be filed on or before September 7, 2004, and reply comments on or before September 21, 2004.

ADDRESSES: Federal Communications Commission, Washington, DC 20554. In addition to filing comments with the FCC, interested parties should serve counsel for the petitioner and counsel for Custer County Broadcasting Co., Inc., the owner of Station KBBN–FM, Broken Bow, Nebraska, as follows: Jason Roberts, Esq., Irwin, Campbell, & Tannenwald, P.C., 1730 Rhode Island Avenue, NW—Suite 200, Washington, DC 20036–3101; Peter Gutmann, Esq., Womble, Carlyle, Sandridge, & Rice, PLLC, 1401 Eye Street, NW., Washington, DC 20005.

FOR FURTHER INFORMATION CONTACT: Deborah A. Dupont, Media Bureau (202) 418–7072.

SUPPLEMENTARY INFORMATION: This is a synopsis of the Commission's Further Notice of Proposed Rule Making, MB Docket No. 04–203, adopted July 14, 2004 and released July 16, 2004. The full text of this Commission decision is available for inspection and copying during normal business hours in the FCC Reference Information Center (Room CY–A257), 445 12th Street, SW., Washington, DC. The complete text of this decision may also be purchased from the Commission's copy contractor, Best Copy and Printing, Inc., 445 12th Street, SW, Room CY–B402, Washington, DC, 20554, (800) 378–3160, or via the company's Web site, *http://www.bcpiweb.com*.

The Provisions of the Regulatory Flexibility Act of 1980 do not apply to this proceeding. Members of the public should note that from the time a Notice of Proposed Rule Making is issued until the matter is no longer subject to Commission consideration or court review, all *ex parte* contacts are prohibited in Commission proceedings, such as this one, which involve channel allotments. *See* 47 CFR 1.1204(b) for rules governing permissible *ex parte* contacts.

For information regarding proper filing procedures for comments, *see* 47 CFR 1.415 and 1.420.

List of Subjects in 47 CFR Part 73

Radio, Radio broadcasting.

For the reasons discussed in the preamble, the Federal Communications Commission proposes to amend 47 CFR Part 73 as follows:

PART 73—RADIO BROADCAST SERVICES

1. The authority citation for Part 73 continues to read as follows:

Authority: 47 U.S.C. 154, 303, 334 and 336.

§ 73.202 [Amended]

2. Section 73.202(b), the Table of FM Allotments under Nebraska, is amended by removing Channel 252C3 and adding Channel 237C2 at Broken Bow, by adding Maxwell, Channel 253C1, and by removing Channel 253C1 at McCook.

Federal Communications Commission.

John A. Karousos,

Assistant Chief, Audio Division, Media Bureau.

[FR Doc. 04–17241 Filed 7–28–04; 8:45 am]

BILLING CODE 6712–01–P

FEDERAL COMMUNICATIONS COMMISSION

47 CFR Part 73

[DA 04–2129; MB Docket No. 04–258; RM–11000]

Radio Broadcasting Services; Levan and Richfield, UT

AGENCY: Federal Communications Commission.

ACTION: Proposed rule.

SUMMARY: This document requests comments on a petition for rulemaking filed by Micro Communications, Inc., licensee of Station KCFM (FM), Levan, Utah, proposing the substitution of Channel 229C for Channel 244C at Levan and the substitution of Channel 244C for Channel 229C at Richfield, Utah, and the modification of the license for Stations KCFM (FM) and KCYQ (FM) to reflect the changes. Mid-Utah Radio, Inc., licensee of KCYQ (FM), Richfield, Utah, is ordered to show cause why its license should not be modified to reflect Channel 244C in lieu of Channel 229C. The coordinates for Channel 229C at Levan are 39–33–31 NL and 111–51–40 WL. The coordinates for Channel 244C at Richfield are 39–19–17NL and 111–46–11 WL.

DATES: Comments must be filed on or before September 13, 2004, and reply comments on or before September 28, 2004.

ADDRESSES: Secretary, Federal Communications Commission, 445 Twelfth Street, SW., Washington, DC 20554. In addition to filing comments with the FCC, interested parties should serve the Petitioner as follows: Peter Gutmann, Esq., Womble, Carlyle, Sandridge, & Rice, PLLC, 1401 I Street, NW., Seventh Floor, Washington, DC 20005.

FOR FURTHER INFORMATION CONTACT: Victoria McCauley, Media Bureau, (202) 418–2180.

SUPPLEMENTARY INFORMATION: This is a synopsis of the Commission's *Notice of Proposed Rule Making,* MB Docket No. 04–258, adopted July 14, 2004, and released July 20, 2004. The full text of this Commission decision is available for inspection and copying during normal business hours in the FCC's Reference Information Center at Portals II, CY–A257, 445 Twelfth Street, SW., Washington, DC. This document may also be purchased from the Commission's duplicating contractors, Best Copy and Printing, Inc., 445 12th Street, SW., Room CY–B402, Washington, DC 20554, telephone 1–800–378–3160 or *http://www.BCPIWEB.com.*

Provisions of the Regulatory Flexibility Act of l980 do not apply to this proceeding.

Members of the public should note that from the time a Notice of Proposed Rule Making is issued until the matter is no longer subject to Commission consideration or court review, all *ex parte* contacts are prohibited in Commission proceedings, such as this one, which involve channel allotments. See 47 CFR 1.1204(b) for rules governing permissible *ex parte* contacts.

For information regarding proper filing procedures for comments, see 47 CFR 1.415 and 1.420.

List of Subjects in 47 CFR Part 73

Radio, Radio broadcasting.

For the reasons discussed in the preamble, the Federal Communications Commission proposes to amend 47 CFR Part 73 as follows:

PART 73—RADIO BROADCAST SERVICES

1. The authority citation for Part 73 continues to read as follows:

Authority: 47 U.S.C. 154, 303, 334 and 336.

§ 73.202 [Amended]

2. Section 73.202(b), the Table of FM Allotments under Utah, is amended by removing Channel 244C and adding Channel 229C at Levan and by removing Channel 229C and adding Channel 244C at Richfield.

Federal Communications Commission.

John A. Karousos,

Assistant Chief, Audio Division, Media Bureau.

[FR Doc. 04–17240 Filed 7–28–04; 8:45 am]

BILLING CODE 6712–01–P

Notices

Federal Register

Vol. 69, No. 145

Thursday, July 29, 2004

This section of the FEDERAL REGISTER contains documents other than rules or proposed rules that are applicable to the public. Notices of hearings and investigations, committee meetings, agency decisions and rulings, delegations of authority, filing of petitions and applications and agency statements of organization and functions are examples of documents appearing in this section.

DEPARTMENT OF AGRICULTURE

Agricultural Research Service

Notice of Federal Invention Available for Licensing and Intent To Grant Exclusive License

AGENCY: Agricultural Research Service, USDA.

ACTION: Notice of availability and intent.

SUMMARY: Notice is hereby given that the federally owned invention disclosed in U.S. Patent No. 6,566,125, ''Use of Enzymes to Reduce Steep Time and SO_2 Requirements in a Maize Wet-Milling Process'', issued on May 20, 2003, is available for licensing and that the U.S. Department of Agriculture, Agricultural Research Service, intends to grant to Genencor International, Inc. of Beloit, Wisconsin, an exclusive license to its rights in this invention.

DATES: Comments must be received within ninety (90) calendar days of the date of publication of this notice in the **Federal Register**.

ADDRESSES: Send comments to: USDA, ARS, Office of Technology Transfer, 5601 Sunnyside Avenue, Room 4–1174, Beltsville, Maryland 20705–5131.

FOR FURTHER INFORMATION CONTACT: June Blalock of the Office of Technology Transfer at the Beltsville address given above; telephone: 301–504–5989.

SUPPLEMENTARY INFORMATION: The Federal government's patent rights in this invention are assigned to the United States of America, as represented by the Secretary of Agriculture. It is in the public interest to so license this invention as Genencor International, Inc. of Beloit, Wisconsin, has submitted a complete and sufficient application for a license. The prospective exclusive license will be royalty-bearing and will comply with the terms and conditions of 35 U.S.C. 209 and 37 CFR 404.7. The prospective exclusive license may be granted unless, within ninety (90) days from the date of this published notice, the Agricultural Research Service receives written evidence and argument which establishes that the grant of the license would not be consistent with the requirements of 35 U.S.C. 209 and 37 CFR 404.7.

Michael D. Ruff,

Assistant Administrator.

[FR Doc. 04–17274 Filed 7–28–04; 8:45 am]

BILLING CODE 3410–03–P

DEPARTMENT OF AGRICULTURE

Agricultural Research Service

Notice of Federal Invention Available for Licensing and Intent To Grant Exclusive License

AGENCY: Agricultural Research Service, USDA.

ACTION: Notice of availability and intent.

SUMMARY: Notice is hereby given that the Federally owned invention disclosed in U.S. Patent No. 6,379,677, ''Streptococcus Iniae Vaccine'', issued on April 30, 2002, is available for licensing and that the U.S. Department of Agriculture, Agricultural Research Service, intends to grant to Schering-Plough Animal Health Corporation of Union, New Jersey, an exclusive license to this invention.

DATES: Comments must be received within ninety (90) calendar days of the date of publication of this Notice in the **Federal Register**.

ADDRESSES: Send comments to: USDA, ARS, Office of Technology Transfer, 5601 Sunnyside Avenue, Room 4–1174, Beltsville, Maryland 20705–5131.

FOR FURTHER INFORMATION CONTACT: June Blalock of the Office of Technology Transfer at the Beltsville address given above; telephone: 301–504–5989.

SUPPLEMENTARY INFORMATION: The Federal Government's patent rights to this invention are assigned to the United States of America, as represented by the Secretary of Agriculture. It is in the public interest to so license this invention as Schering-Plough Animal Health Corporation of Union, New Jersey, has submitted a complete and sufficient application for a license. The prospective exclusive license will be royalty-bearing and will comply with the terms and conditions of 35 U.S.C. 209 and 37 CFR 404.7. The prospective exclusive license may be granted unless, within ninety (90) days from the date of this published Notice, the Agricultural Research Service receives written evidence and argument which establishes that the grant of the license would not be consistent with the requirements of 35 U.S.C. 209 and 37 CFR 404.7.

Michael D. Ruff,

Assistant Administrator.

[FR Doc. 04–17275 Filed 7–28–04; 8:45 am]

BILLING CODE 3410–03–P

DEPARTMENT OF AGRICULTURE

Forest Service

Notice of Lincoln County Resource Advisory Committee Meeting

AGENCY: Forest Service, USDA.

ACTION: Notice of meeting.

SUMMARY: Pursuant to the authorities in the Federal Advisory Committee Act (Public Law 92–463) and under the Secure Rural Schools and Community Self-Determination Act of 2000 (Public Law 106–393) the Kootenai National Forests' Lincoln County Resource Advisory Committee will meet on August 4, at 6 p.m. in Libby, Montana for a business meeting. The meeting is open to the public.

DATES: August 4, 2004.

ADDRESSES: The August 4, meeting will be held at the Kootenai National Forest Supervisor's Office, located at 1101 U.S. Highway 2 West, Libby, MT.

FOR FURTHER INFORMATION CONTACT: Barbara Edgmon, Committee Coordinator, Kootenai National Forest at (406) 293–6211 or e-mail *bedgmon@fs.fed.us*.

SUPPLEMENTARY INFORMATION: Agenda topics include status of approved projects, vote on the funding of project proposals for 2005 and receiving public comment. If the meeting date or location is changed, notice will be posted in the local newspapers, including the Daily Interlake based in Kalispell, MT.

Dated: July 21, 2004.

Bob Castaneda,

Forest Supervisor.

[FR Doc. 04–17211 Filed 7–28–04; 8:45 am]

BILLING CODE 3410–11–M

DEPARTMENT OF AGRICULTURE

Forest Service

Madera County Resource Advisory Committee

AGENCY: Forest Service, USDA.

ACTION: Notice of Resource Advisory Committee Meeting.

SUMMARY: Pursuant to the authorities in the Federal Advisory Committee Act of 1972 (Public Law 92–463) and under the secure Rural Schools and Community Self-Determination Act of 2000 (Public Law 106–393) the Sierra National Forest's Resource Advisory Committee for Madera County will meet on Monday, August 16, 2004. The Madera Resource Advisory Committee will meet at the Forest Service Office, North Fork, CA 93643. The purpose of the meeting is: completion of whole committee discussion of 2004 project proposals and 2003 RAC project report(s).

DATES: The Madera Resource Advisory Committee meeting will be held Monday, August 16, 2004. The meeting will be held from 7 p.m. to 9 p.m.

ADDRESSES: The Madera County RAC meeting will be held at the Forest Service Office, 57003 Road 225, North Fork, CA 93644.

FOR FURTHER INFORMATION CONTACT: Dave Martin, USDA, Sierra National Forest, Bass Lake Ranger District, 57003 Road 225, North Fork, CA 93643 (559) 877–2218 ext. 3100; e-mail: *dmartin05@fs.fed.us.*

SUPPLEMENTARY INFORMATION: Agenda items to be covered include: (1) Completion of whole committee discussion of 2004 project proposals, and (2) 2003 RAC project report(s).

Dated: July 23, 2004.

David W. Martin,

District Ranger, Bass Lake Ranger District.

[FR Doc. 04–17276 Filed 7–28–04; 8:45 am]

BILLING CODE 3410–11–M

DEPARTMENT OF AGRICULTURE

Forest Service

North Gifford Pinchot National Forest Resource Advisory Committee Meeting Notice

AGENCY: Forest Service, USDA.

ACTION: Notice of meeting.

SUMMARY: The North Gifford Pinchot National Forest Resource Advisory Committee will meet on Wednesday, August 4, 2004 at the Depot Conference room, located in the Amtrak Building of the Train Depot, 210 Railroad Ave, Centralia, Washington, 98531. The meeting will begin at 9 a.m. and continue until 4 p.m. The purpose of the meeting is to review 14 proposals for Title II funding of Forest projects under the Secure Rural Schools and Community Self-Determination Act of 2000.

All North Gifford Pinchot National Forest Resource Advisory Committee meetings are open to the public. Interested citizens are encouraged to attend. The ''open forum'' provides opportunity for the public to bring issues, concerns, and discussion topics to the Advisory Committee. The ''open forum'' is scheduled to occur at 9:30 a.m. Interested speakers will need to register prior to the open forum period. The committee welcomes the public's written comments on committee business at any time.

FOR FURTHER INFORMATION CONTACT: Direct questions regarding this meeting to Roger Peterson, Public Affairs Specialist, at (360) 891–5007, or write Forest Headquarters Office, Gifford Pinchot National Forest, 10600 NE., 51st Circle, Vancouver, WA 98682.

Dated: July 23, 2004.

Lynn Burditt,

Deputy Forest Supervisor.

[FR Doc. 04–17277 Filed 7–28–04; 8:45 am]

BILLING CODE 3410–11–M

DEPARTMENT OF COMMERCE

Economic Development Administration

Notice of Petitions by Producing Firms for Determination of Eligibility To Apply for Trade Adjustment Assistance

AGENCY: Economic Development Administration (EDA), Commerce.

ACTION: To give all interested parties an opportunity to comment.

Petitions have been accepted for filing on the dates indicated from the firms listed below.

LIST OF PETITION ACTION BY TRADE ADJUSTMENT ASSISTANCE FOR PERIOD JUNE 19, 2004–JULY 23, 2004

Firm name	Address	Date petition accepted	Product
Engine Monitor, Inc	191 James Drive West, St. Rose, LA 70087.	28–Jun–04	Process control instruments.
MUM Industries, Inc	3900 Ben Hur Avenue #3, Willoughby, OH 44094.	28–Jun–04	Air purification equipment.
W. A. Whitney Co	650 Race Street, Rockford, IL 61101.	28–Jun–04	Punch/plasma machine for punching hole in and shearing metal.
The Allen Company	P. O. Box 217, Blanchester, OH 45107.	6–Jul–04	Imprinted ceramic mugs and other advertising specialty items such as ashtrays, tiles, cups, candles, glasses, decals and key chains.
Collegiate Furnishings	280 Reese Road, State College, PA 16801.	6–Jul–04	Wooden bedroom furniture.
Hoffco/Comet Industries, Inc	358 N.W. F Street, Richmond, IN 47374.	6–Jul–04	Transmission components for washing machines and go-kart/utility vehicles.
MAG Jewelry Co., Inc	838 Dyer Avenue, Cranston, MA 02920.	6–Jul–04	Base and precious metal pins, pendants lockets, necklaces and bracelets.
Tompkins Brothers Company, Inc.	623 Oneida Street, Syracuse, NY 13202.	6–Jul–04	Knitting machines.
ZacBac Apparel, LLC	100 Factory Road, Marshall, AR 72650.	6–Jul–04	Uniforms and apparel.
Creative Graphics	191 James Drive West, St. Rose, LA 70087.	9–Jul–04	Engraved products.
Toolander Engineering, Inc	1110 Via Callejon, San Clemente, CA 92673.	9–Jul–04	Custom metal stamped parts for lighting and technology industries.

LIST OF PETITION ACTION BY TRADE ADJUSTMENT ASSISTANCE FOR PERIOD JUNE 19, 2004–JULY 23, 2004—Continued

Firm name	Address	Date petition accepted	Product
Alamo Stamping Co., Inc	812 North 907 FM Road, Alamo, TX 78516.	20–Jul–04	Parts for electrical machines including contacts, heatsinks and shields.
Buck's Bags, Inc	2401 West Main Street, Boise, ID 83702.	20–Jul–04	Travel and sports bags.
Mid-America Fittings, Inc	7604 Wedd, Overland Parks, KS 66204.	20–Jul–04	Brass nipples and fittings and steel fittings.

The petitions were submitted pursuant to Section 251 of the Trade Act of 1974 (19 U.S.C. 2341). Consequently, the United States Department of Commerce has initiated separate investigations to determine whether increased imports into the United States of articles like or directly competitive with those produced by each firm contributed importantly to total or partial separation of the firm's workers, or threat thereof, and to a decrease in sales or production of each petitioning firm. Any party having a substantial interest in the proceedings may request a public hearing on the matter. A request for a hearing must be received by Trade Adjustment Assistance, Room 7315, Economic Development Administration, U.S. Department of Commerce, Washington, DC 20230, no later than the close of business of the tenth calendar day following the publication of this notice. The Catalog of Federal Domestic Assistance official program number and title of the program under which these petitions are submitted is 11.313, Trade Adjustment Assistance.

Dated: July 23, 2004.

Brenda A. Johnson,

Senior Technical Assistance Specialist.

[FR Doc. 04–17278 Filed 7–28–04; 8:45 am]

BILLING CODE 3510–24–P

DEPARTMENT OF COMMERCE

National Oceanic and Atmospheric Administration

Notice Requesting Nominations for the Advisory Committee on Commercial Remote Sensing (ACCRES)

SUMMARY: The Advisory Committee on Commercial Remote Sensing (ACCRES) was constituted to advise the Secretary of Commerce through the Under Secretary of Commerce for Oceans and Atmosphere on matters relating to the U.S. commercial remote sensing industry and NOAA's activities to carry out responsibilities of the Department of Commerce set forth in the Land Remote Sensing Policy Act of 1992 (15 U.S.C. Secs 5621–5625). The Committee is composed of leaders in the commercial space-based remote sensing industry, space-based remote sensing data users, government (federal, state, local), and academia. The Department of Commerce is seeking up to five highly qualified individuals knowledgeable about the commercial space-based remote sensing industry and uses of space-based remote sensing data to serve on the Committee.

DATES: Nominations must be postmarked on or before August 30, 2004.

SUPPLEMENTARY INFORMATION: ACCRES was established by the Secretary of Commerce (Secretary) on May 21, 2002, to advise the Secretary through the Under Secretary of Commerce for Oceans and Atmosphere on relating to the U.S. commercial remote sensing industry and NOAA's activities to carry out responsibilities of the Department of Commerce set forth in the Land Remote Sensing Policy Act of 1992 (15 U.S.C. 5621–5625).

The Committee meets at least twice a year. Committee members serve in a representative capacity for a term of two years and may serve up to two consecutive terms, if reappointed. No less than 12 and no more than 15 individuals may serve on the Committee. Membership is comprised of highly qualified individuals representing the commercial space-based remote sensing industry, space-based remote sensing data users, government (Federal, State, local), and academia from a balance of geographical regions. Nominations are encouraged from all interested persons and organizations representing interests affected by the U.S. commercial space based remote sensing industry. Nominees must possess demonstrable expertise in a field related to the spaced based commerical remote sensing industry or expolitation of space based commercial remotely sensed data and be able to attend committee meetings that are held at least two times per year. In addition, selected candidates must apply for and obtain a security clearance. Membership is voluntary, and service is without pay.

Each nomination submission should include the proposed committee member's name and organizational affiliation, a cover letter describing the nominee's qualifications and interest in serving on the Committee, a curriculum vitae or resume of nominee, and no more than three supporting letters describing the nominee's qualifications and interest in serving on the Committee. Self-nominations are acceptable. The following contact information should accompany each submission: the nominee's name, address, phone number, fax number, and e-mail address if available.

Nominations should be sent to Timothy Stryker, NOAA/NESDIS International and Interagency Affairs, 1335 East West Highway, Room 7311, Silver Spring, Maryland 20910 and nominations must be received by August 30, 2004. The full text of the Committee Charter and its current membership can be viewed at the Agency's Web page at *http://www.accres.noaa.gov/index.html.*

FOR FURTHER INFORMATION CONTACT: Douglas Brauer, NOAA/NESDIS International and Interagency Affairs, 1335 East West Highway, Room 7311, Silver Spring, Maryland 20910; telephone (301) 713–2024 x213, fax (301) 713–2032, e-mail *DouglasBrauer@noaa.gov.*

Gregory W. Withee,

Assistant Administrator for Satellite and Information Services.

[FR Doc. 04–17324 Filed 7–28–04; 8:45 am]

BILLING CODE 3510–HR–P

DEPARTMENT OF COMMERCE

National Oceanic and Atmospheric Administration

[I.D. 071904E]

Fisheries of the Caribbean, Gulf of Mexico, and South Atlantic; Final Environmental Impact Statement Addressing Essential Fish Habitat Requirements of the Fishery Management Plans of the Gulf of Mexico

AGENCY: National Marine Fisheries Service (NMFS), National Oceanic and Atmospheric Administration (NOAA), Commerce.

ACTION: Notice of availability of a Record of Decision.

SUMMARY: In compliance with the National Environmental Policy Act of 1969, NMFS announces the availability of a Record of Decision (ROD) regarding a final environmental impact statement (FEIS) that was prepared to determine whether to amend the fishery management plans of the Gulf of Mexico Fishery Management Council to address essential fish habitat (EFH) requirements of the Magnuson-Stevens Fishery Conservation and Management Act (Magnuson-Stevens Act). This ROD documents the decision by NMFS to proceed with such an amendment to describe and identify EFH for each fishery; identify other actions to encourage the conservation and enhancement of such EFH; and identify measures to prevent, mitigate, or minimize to the extent practicable the adverse effects of fishing on such EFH.

ADDRESSES: Copies of the ROD and the FEIS can be obtained from Dr. Richard Leard, Deputy Executive Director, Gulf of Mexico Fishery Management Council, The Commons at Rivergate, 3018 U.S. Highway 301 North, Suite 1000, Tampa, FL 33619–2266; telephone 813–228–2815; fax 813–225–7015.

FOR FURTHER INFORMATION CONTACT: Richard Leard, Council staff contact, 813–228–2815, or David Dale, NMFS staff contact, 727–570–5317, fax: 727–570–5300; email: *david.dale@noaa.gov*.

SUPPLEMENTARY INFORMATION: NMFS Southeast Region was the lead agency responsible for preparing, under third party contract, an FEIS for the Generic Essential Fish Habitat Amendment (EFH Amendment) for the shrimp, red drum, reef fish, stone crab, and coral and coral reef fishery management plans for the Gulf of Mexico and the spiny lobster and coastal migratory pelagic fishery management plans for the Gulf of Mexico and South Atlantic. The FEIS evaluates alternatives for bringing the EFH Amendment into compliance with the EFH mandates of the Magnuson-Stevens Act. For each of the fisheries, the FEIS analyzes a range of potential alternatives to: (1) describe and identify EFH for the fishery; (2) identify other actions to encourage the conservation and enhancement of such EFH; and (3) identify measures to minimize, to the extent practicable, the adverse effects of fishing on such EFH. The FEIS contains the methods and data used in the analyses; background information on the physical, biological, human, and administrative environments; and a description of the fishing and non-fishing threats to EFH. The notice of availability of the FEIS was published on June 25, 2004 (69 CFR 35597).

The ROD documents NMFS's decision to proceed, in cooperation with the Gulf of Mexico Fishery Management Council (Council) and the South Atlantic Fishery Management Council for the joint fishery management plans, with amending the shrimp, red drum, reef fish, stone crab, and coral and coral reef fishery management plans for the Gulf of Mexico and the spiny lobster and coastal migratory pelagic fishery management plans for the Gulf of Mexico and South Atlantic to implement the Council's preferred alternatives for identifying EFH and identifying habitat areas of particular concern, and preventing, mitigating, or minimizing the adverse effects of fishing on EFH. The ROD identifies all alternatives considered in reaching the decision, specifies the alternatives which were considered to be environmentally preferable, and identifies and discusses relevant factors which were balanced by NMFS in making its decision. A copy of the ROD will be mailed to individuals, agencies, or companies that commented on the draft and final EISs. In addition, copies of the ROD and FEIS are available from the Council (see **ADDRESSES**).

Authority: 16 U.S.C. 1801 *et seq.*

Dated: July 23, 2004.

Rebecca Lent,

Deputy Assistant Administrator for Regulatory Programs, National Marine Fisheries Service.

[FR Doc. 04–17317 Filed 7–28–04; 8:45 am]

BILLING CODE 3510–22–S

DEPARTMENT OF COMMERCE

National Oceanic and Atmospheric Administration

[I.D. 070104G]

Marine Mammals; File No. 116–1729

AGENCY: National Marine Fisheries Service (NMFS), National Oceanic and Atmospheric Administration (NOAA), Commerce.

ACTION: Issuance of permit.

SUMMARY: Notice is hereby given that Sea World, Inc., 7007 Sea World Drive, Orlando, Florida 32821, has been issued a permit to import one beluga whale (*Delphinapterus leucas*) and one Commerson's dolphin (*Cephalorhynchus commersonii*) for the purposes of public display.

ADDRESSES: The permit and related documents are available for review upon written request or by appointment in the following office(s):

Permits, Conservation and Education Division, Office of Protected Resources, NMFS, 1315 East-West Highway, Room 13705, Silver Spring, MD 20910; phone (301)713–2289; fax (301)713–0376;

Southwest Region, NMFS, 501 West Ocean Blvd., Suite 4200, Long Beach, CA 90802–4213; phone (562)980–4001; fax (562)980–4018;

FOR FURTHER INFORMATION CONTACT: Jennifer Skidmore or Jill Lewandowski, (301)713–2289.

SUPPLEMENTARY INFORMATION: On January 29, 2004, notice was published in the **Federal Register** (69 FR 4293) that a request for a public display permit to import one male, adult beluga whale and one male, adult Commerson's dolphin from the Duisburg Zoo, Germany to Sea World of California in San Diego, California. The requested permit has been issued under the authority of the Marine Mammal Protection Act of 1972, as amended (16 U.S.C. 1361 *et seq.*), and the Regulations Governing the Taking and Importing of Marine Mammals (50 CFR part 216).

In compliance with the National Environmental Policy Act of 1969 (42 U.S.C. 4321 *et seq.*), a final determination has been made that the activity proposed is categorically excluded from the requirement to prepare an environmental assessment or environmental impact statement.

Dated: July 23, 2004.

Stephen L. Leathery,

Chief, Permits, Conservation and Education Division, Office of Protected Resources, National Marine Fisheries Service.

[FR Doc. 04–17318 Filed 7–28–04; 8:45 am]

BILLING CODE 3510–22–S

CORPORATION FOR NATIONAL AND COMMUNITY SERVICE

Proposed Information Collection; Submission for OMB Review; Comment Request

AGENCY: Corporation for National and Community Service.

ACTION: Notice.

SUMMARY: The Corporation for National and Community Service (hereinafter the ''orporation''), as part of its continuing effort to reduce paperwork and respondent burden, will submit the following public information collection request (ICR) to the Office of Management and Budget (OMB) for review and approval in accordance with the Paperwork Reduction Act of 1995 (Public Law 104–13, (44 U.S.C. Chapter 35)). The Corporation is soliciting from members of the public and affected agencies comments concerning the proposed collection of information.

Currently, the Corporation is soliciting comments concerning a new information collection for the Volunteers in Service to America program (VISTA). The Corporation proposes to conduct a series of surveys and interviews to study the impact of Volunteers in Service to America (VISTA) service on participants enrolling from 1965 to 1994. The object of this study is to explore the long-term impacts of participation on the lives of VISTA participants to a comparison group who (1) Enrolled in VISTA during the same time period,; and (2) completed the VISTA orientation but who did not actually serve in the program (or served for less than one month). Specific life course outcomes of interest include education and employment history, civic engagement and behavior, family life, and intergenerational transfer of values.

Copies of the information collection request can be obtained by contacting the office listed below in the **ADDRESSES** section of this notice.

DATES: Written comments must be submitted to the office listed in the **ADDRESSES** section by September 27, 2004.

ADDRESSES: You may submit comments, identified by the title of the information collection activity, by any of the following methods:

(1) By mail sent to: Corporation for National and Community Service, Attn: Kelly Arey, Department of Research and Policy Development, Rm 8109, 1201 New York Avenue, NW., Washington, DC, 20525.

(2) By hand delivery or by courier to the Corporation's mailroom, Room 6010, at the mail address given in paragraph (1) above, between 9 a.m. and 4 p.m., Monday through Friday, except Federal holidays.

(3) By fax to: 202–565–2785, Attn: Kelly Arey.

(4) Electronically through the Corporation's e-mail address system: *karey@cns.gov.*

(5) Individuals who use a telecommunications device for the deaf (TTY–TDD) may call (202) 565–2799 between 8:30 a.m. and 5 p.m. Eastern time, Monday through Friday.

SUPPLEMENTARY INFORMATION: The Corporation is particularly interested in comments which:

- Evaluate whether the proposed collection of information is necessary for the proper performance of the functions of the Corporation, including whether the information will have practical utility;
- Evaluate the accuracy of the agency's estimate of the burden of the proposed collection of information, including the validity of the methodology and assumptions used;
- Enhance the quality, utility and clarity of the information to be collected; and
- Minimize the burden of the collection of information to those who are to respond, including through the use of appropriate automated, electronic, mechanical, or other technological collection techniques or other forms of information technology, *e.g.* permitting electronic submissions of responses.

Background: The Corporation for National and Community Service is strongly committed to evaluating the effectiveness of its programs. VISTA is our country's longest continually operating domestic service program, with over 130,000 participants enrolling since its inception in 1965. Since 1994 the program has been administered by the Corporation as part of AmeriCorps. VISTA participants work in communities to build local capacity to advance economic development in low-income neighborhoods across the United States. The study will examine the long-term impacts VISTA service has on participants' civic attitudes, life decisions, goals, values, and enduring habits of civic engagement.

The object of this study is to explore the long-term impacts of VISTA participation from 1965–1994 on the lives of participants to a comparison group who enrolled in VISTA during the same time period and completed the VISTA orientation but who did not actually serve in the program (or served less than one month). To meet these objectives, a sample of VISTA participants and near-participants will be drawn from the roster of individuals enrolling in VISTA from 1965 to 1994. In addition to collecting information on the outcomes specified above, data on respondent demographics and pre-VISTA experiences will be collected. The inclusion of a comparison group of near-participants will provide insight into the outcomes realized by VISTA participants who completed their term of service.

This study will gather data using phone surveys and in-person interviews. The phone surveys will provide largely quantitative information, while the in-person interviews will allow for the collection of highly detailed and more qualitative descriptions of the life courses charted by VISTA participants and near-participants.

Type of Review: New collection.

Agency: Corporation for National and Community Service.

Title: Study of 40 Years of VISTA's Impact on Volunteers.

OMB Number: None.

Agency Number: None.

Affected Public: Individuals and households

Total Respondents: 1500.

Frequency: One-Time.

Average Time Per Response: 43 minutes (telephone survey: average of 35 minutes per respondent; the in-person interview: average 3.5 hours per respondent).

Estimated Total Burden Hours: 1075 hours.

Total Burden Cost (capital/startup): None.

Total Burden Cost (operating/maintenance): None

Comments submitted in response to this notice will be summarized and/or included in the request for Office of Management and Budget approval of the information collection request; they will also become a matter of public record.

Dated: July 22, 2004.

Robert Grimm,

Acting Director, Department of Research and Policy Development.

[FR Doc. 04–17226 Filed 7–28–04; 8:45 am]

BILLING CODE 6050–$$–P

DEPARTMENT OF DEFENSE

Department of the Army

Notice of Availability (NOA) of the Record of Decision (ROD) for the Transformation of the 172nd Infantry Brigade (Separate), U.S. Army Alaska (USARAK)

AGENCY: Department of the Army, DoD.

ACTION: Notice of availability.

SUMMARY: This announces the availability of the ROD for the transformation of the 172nd Infantry Brigade, USARAK. The ROD documents and explains the Army's decision to proceed with full transformation of USARAK forces at Fort Wainwright (FWA), Fort Richardson (FRA), and outlying training areas (*e.g.,* Gerstle River Training Area and Black Rapids Training Site). This decision was based on the analysis described in the Final Environmental Impact Statement (EIS), supporting studies, and comments provided during formal comment and review periods.

ADDRESSES: If you have questions regarding the ROD, or would like a copy, please contact Mr. Kevin Gardner, Directorate of Public Works, 730 Quartermaster Road, Attention: APVR–RPW–GS (Gardner), Fort Richardson, AK 99505–6500; or Mr. Calvin Bagley, Center for Environmental Management of Military Lands (CEMML), Colorado State University, Fort Collins, CO 80523–1490.

FOR FURTHER INFORMATION CONTACT: Mr. Kevin Gardner by phone at (907) 384–3331; by facsimile at (907) 384–3028; or by email at *kevin.gardner@richardson.army.mil*; or Mr. Calvin Bagley by phone at (970) 491–3324; by facsimile at (970) 491–2713; or by email at *cbagley@cemml.colostate.edu.* Information is also contained at *http://www.cemml.colostate.edu/alaskaeis.*

SUPPLEMENTARY INFORMATION: The Department of the Army has decided to proceed with the full transformation of USARAK forces at Fort Wainwright (FWA), Fort Richardson (FRA), and outlying training areas (*e.g.,* Gerstle River Training Area and Black Rapids Training Site). The decision includes: (1) Transformation of the 172nd Infantry Brigade (Separate) to a Stryker Brigade Combat Team (SBCT); (2) assignment of the 1–501st Parachute Infantry Regiment to USARAK and a subsequent expansion into an airborne-capable Brigade Combat Team (Unit of Action); (3) assignment of additional personnel to the newly created SBCT and the airborne-capable Brigade Combat Team (Unit of Action); (4) a significant increase in personnel and equipment in USARAK; (5) construction of four new SBCT-related facilities at USARAK; (6) increased use of existing USARAK ranges, facilities, and infrastructure; (7) implementation and budgeting of environmental and cultural management, monitoring and mitigation programs identified in the EIS.

Changes to force structure and stationing, and increased use of ranges, facilities, and infrastructure will occur. In addition, new systems will be acquired. The Stryker, an eight-wheeled light armored vehicle designed to increase ground mobility and firepower, will be used on USARAK lands. In addition, the unmanned aerial vehicle (UAV) will be utilized for reconnaissance or surveillance training missions. Training will be designed to support the missions of transformed USARAK organizations, and increased use of land and impact areas for live-fire and maneuver training is expected.

A copy of the ROD is available at *http://www.cemml.colostate.edu/alaskaeis.*

Dated: July 21, 2004.

Raymond J. Fatz,

Deputy Assistant Secretary of the Army (Environment, Safety and Occupational Health) OASA (I&E).

[FR Doc. 04–17212 Filed 7–28–04; 8:45 am]

BILLING CODE 3710–08–M

ENVIRONMENTAL PROTECTION AGENCY

[OECA–2003–0144; FRL–7790–9]

Agency Information Collection Activities; Submission for OMB Review and Approval; Comment Request; NESHAP for Benzene Emissions From Coke By-Product Recovery Plants (Renewal), ICR Number 1080.11, OMB Number 2060–0185

AGENCY: Environmental Protection Agency (EPA).

ACTION: Notice.

SUMMARY: In compliance with the Paperwork Reduction Act, this document announces that an Information Collection Request (ICR) has been forwarded to the Office of Management and Budget (OMB) for review and approval. This is a request to renew an existing approved collection. This ICR is scheduled to expire on August 31, 2004. Under OMB regulations, the Agency may continue to conduct or sponsor the collection of information while this submission is pending at OMB. This ICR describes the nature of the information collection and its estimated burden and cost.

DATES: Additional comments may be submitted on or before August 30, 2004.

ADDRESSES: Submit your comments, referencing docket ID number OECA–2003–0144, to (1) EPA online using EDOCKET (our preferred method), by E-mail to *docket.oeca@epa.gov,* or by mail to: Environmental Protection Agency, EPA Docket Center (EPA/DC), Enforcement and Compliance Docket and Information Center EPA West, Mail Code 2201T, 1200 Pennsylvania Avenue, NW., Washington, DC 20460, and (2) OMB at: Office of Information and Regulatory Affairs, Office of Management and Budget (OMB), Attention: Desk Officer for EPA, 725 17th Street, NW., Washington, DC 20503.

FOR FURTHER INFORMATION CONTACT: Dan Chadwick, Compliance Assessment and Media Programs Division, Office of Compliance, Mail Code 2223A, Environmental Protection Agency, 1200 Pennsylvania Avenue, NW., Washington, DC 20460; telephone number: (202) 564–7054; fax number: (202) 564–0050; E-mail address: *chadwick.dan@epa.gov.*

SUPPLEMENTARY INFORMATION: EPA has submitted the following ICR to OMB for review and approval according to the procedures prescribed in 5 CFR 1320.12. On November 3, 2003 (68 FR 62289), EPA sought comments on this ICR pursuant to 5 CFR 1320.8(d). EPA received no comments.

EPA has established a public docket for this ICR under Docket ID Number OECA–2003–0144, which is available for public viewing at the Enforcement and Compliance Docket and Information Center in the EPA Docket Center (EPA/DC), EPA West, Room B102, 1301 Constitution Avenue, NW., Washington, DC. The EPA Docket Center Public Reading Room is open from 8:30 a.m. to 4:30 p.m., Monday through Friday, excluding legal holidays. The telephone number for the Reading Room is (202) 566–1744, and the telephone number for the Enforcement and Compliance Docket and Information Center is: (202) 566–1752. An electronic version of the public docket is available through EPA Dockets (EDOCKET) at *http://www.epa.gov/edocket.* Use EDOCKET to submit or view public comments, access the index listing of the contents of the public docket, and to access those documents in the public docket that are available electronically. When in the system, select ''search,'' then key in the docket ID number identified above.

Any comments related to this ICR should be submitted to EPA and OMB within 30 days of this notice. EPA's policy is that public comments, whether submitted electronically or in paper, will be made available for public viewing in EDOCKET as EPA receives them and without change, unless the comment contains copyrighted material, confidential business information (CBI), or other information whose public disclosure is restricted by statute. When

EPA identifies a comment containing copyrighted material, EPA will provide a reference to that material in the version of the comment that is placed in EDOCKET. The entire printed comment, including the copyrighted material, will be available in the public docket. Although identified as an item in the official docket, information claimed as CBI, or whose disclosure is otherwise restricted by statute, is not included in the official public docket, and will not be available for public viewing in EDOCKET. For further information about the electronic docket, *see* EPA's **Federal Register** notice describing the electronic docket at 67 FR 38102 (May 31, 2002), or go to *www.epa.gov/edocket.*

Title: NESHAP for Benzene Emissions from Coke By-Product Recovery Plants (40 CFR part 61, subpart L) (Renewal).

Abstract: Owners or operators of existing and new facilities that are furnace or foundry coke by-product recovery plants that produce benzene emissions subject to NESHAP subpart L must submit notification of and application for construction, reconstruction or modification, and notice of the anticipated date of initial and actual startup. Owners and operators of regulated facilities must also submit notifications of: performance tests; any physical or operational change which may increase the emission rate; implementation of equipment leakage requirements; notification that the requirements of 40 CFR part 61, subpart L and 40 CFR part 61, subpart V have been met; and notification of intent to elect to comply with the requirements at 40 CFR 61.243 at least 90 days before implementation. These owners and operators must also submit performance test reports and semi-annual reports. Records must be maintained of leak detection and repair logs, the design requirements of closed-vent systems and control devices, applicable valve information, design control device, plan operations and corrective action, compliance tests, reference values of monitored parameters, and monitoring results and exceedances (alternative control options). Records must also be kept of annual furnace and foundry coke production for furnace coke by-product recovery plants, monitoring data, monitoring system calibration checks, and the occurrence and duration of periods where the monitoring system is malfunctioning or inoperative. Records shall be retained for at least two years.

The use of carbon adsorbers and vapor incinerators instead of gas blanketing, the control technology on which the standards were originally based, was made optional by the 1991 revision. In 1999, certain quarterly reporting obligations were eliminated, a plan to handle benzene and removed carbon in accordance with the regulation was required for carbon adsorbers and reporting of the monitoring method chosen for each vapor incinerator was also required.

The notifications required in the applicable regulations are used to inform the Agency or delegated authority when a source becomes subject to the requirements of the regulations. The reviewing authority may then inspect the source to check if the pollution control devices are properly installed and operated and the regulations are being met. Performance test reports are needed as the Agency's record of a source's initial capability to comply with the emission standards and as a record of the operating conditions under which compliance was achieved. Compliance is achieved when emissions are routed through a closed-vent system (no detectable emissions) to a control device that achieves a 95-percent or greater destruction efficiency. The semiannual reports are used for problem identification, as a check on source operation and maintenance, and for compliance determinations. The information generated by the monitoring, recordkeeping and reporting requirements described in this ICR is used by the Agency to ensure that facilities affected by the NESHAP continue to operate the control equipment in compliance with the regulation. Adequate monitoring, recordkeeping, and reporting are necessary to ensure compliance with the applicable regulations, as required by the Clean Air Act. This information is being collected to assure compliance with 40 CFR part 61, subpart L.

An agency may not conduct or sponsor, and a person is not required to respond to, a collection of information unless it displays a currently valid OMB Control Number. The OMB Control Numbers for EPA's regulations are listed in 40 CFR part 9 and 48 CFR chapter 15, and are identified on the form and/or instrument, if applicable.

Burden Statement: The annual public reporting and recordkeeping burden for this collection of information is estimated to average 92 hours per response. Burden means the total time, effort, or financial resources expended by persons to generate, maintain, retain, or disclose or provide information to or for a federal agency. This includes the time needed to review instructions; to develop, acquire, install, and utilize technology and systems for the purposes of collecting, validating, and verifying information, processing and maintaining information, and disclosing and providing information; to train personnel to be able to respond to a collection of information; to search data sources; to complete and review the collection of information; and to transmit or otherwise disclose the information.

Respondents/Affected Entities: Existing facilities and new facilities that are furnace or foundry coke by-product recovery plants that produce benzene emissions.

Estimated Number of Respondents: 17.

Frequency of Response: Semi-annually, On occasion.

Estimated Total Annual Hour Burden: 3,138 hours.

Estimated Total Capital and Operations & Maintenance (O&M) Annual Costs: $0, which includes $0 annualized capital/startup costs, and $0 annual O&M costs.

Changes in the Estimates: There is a decrease of 3,945 hours in the total estimated burden currently identified in the OMB Inventory of Approved ICR Burdens. This decrease in burden from the most recently approved ICR reflects the exclusion of burden hours and costs relating to compliance with 40 CFR part 61, subpart Y, which was included in the burden calculations of the currently active ICR, NESHAP for Benzene Emissions from Benzene Storage Vessels and Coke By-Product Recovery Plants (40 CFR part 61, subparts L & Y), ICR Number 1080.10. The reporting obligations under subpart Y are now addressed under the Consolidated Air Rule and are subject to a different ICR. The decrease in burden under subpart L also reflects a more accurate estimate of the number of existing and new sources subject to this subpart and reflects the elimination of certain quarterly reporting requirements.

Dated: July 14, 2004.

Oscar Morales,

Director, Collection Strategies Division.

[FR Doc. 04–17304 Filed 7–28–04; 8:45 am]

BILLING CODE 6560–50–P

ENVIRONMENTAL PROTECTION AGENCY

[OECA–2003–0140; FRL–7790–7]

Agency Information Collection Activities; Submission for OMB Review and Approval; Comment Request; NESHAP for Epoxy Resin and Non-Nylon Polyamide Production (Renewal), ICR Number 1681.05, OMB Number 2060–0290

AGENCY: Environmental Protection Agency (EPA).

ACTION: Notice.

SUMMARY: In compliance with the Paperwork Reduction Act, this document announces that an Information Collection Request (ICR) has been forwarded to the Office of Management and Budget (OMB) for review and approval. This is a request to renew an existing approved collection. This ICR is scheduled to expire on September 30, 2004. Under OMB regulations, the Agency may continue to conduct or sponsor the collection of information while this submission is pending at OMB. This ICR describes the nature of the information collection and its estimated burden and cost.

DATES: Additional comments may be submitted on or before August 30, 2004.

ADDRESSES: Submit your comments, referencing docket ID number OECA–2003–0140, to (1) EPA online using EDOCKET (our preferred method), by e-mail to *docket.oeca@epa.gov,* or by mail to: Environmental Protection Agency, EPA Docket Center (EPA/DC), Enforcement and Compliance Docket and Information Center EPA West, Mail Code 2201T, 1200 Pennsylvania Avenue, NW, Washington, DC 20460, and (2) OMB at: Office of Information and Regulatory Affairs, Office of Management and Budget (OMB), Attention: Desk Officer for EPA, 725 17th Street, NW., Washington, DC 20503.

FOR FURTHER INFORMATION CONTACT: Learia Williams, Compliance Assessment and Programs Division (Mail Code 2223A), Office of Compliance, Environmental Protection Agency, 1200 Pennsylvania Avenue, NW., Washington, DC 20460; telephone number: (202) 564–4113; fax number: (202) 564–0050; e-mail address: *williams.learia@epa.gov.!*

SUPPLEMENTARY INFORMATION: EPA has submitted the following ICR to OMB for review and approval according to the procedures prescribed in 5 CFR 1320.12. On November 3, 2003 (68 FR 62289), EPA sought comments on this ICR pursuant to CFR 1320.8(d). EPA received no comments.

EPA has established a public docket for this ICR under Docket ID Number OECA–2003–0140, which is available for public viewing at the Enforcement and Compliance Docket and Information Center in the EPA Docket Center (EPA/DC), EPA West, Room B102, 1301 Constitution Avenue, NW., Washington, DC. The EPA Docket Center Public Reading Room is open from 8:30 a.m. to 4:30 p.m., Monday through Friday, excluding legal holidays. The telephone number for the Reading Room is (202) 566–1744, and the telephone number for the Enforcement and Compliance Docket and Information Center Docket is: (202) 566–1752. An electronic version of the public docket is available through EPA Dockets (EDOCKET) at *http://www.epa.gov/edocket.* Use EDOCKET to submit or view public comments, access the index listing of the contents of the public docket, and to access those documents in the public docket that are available electronically. When in the system, select ''search,'' then key in the docket ID number identified above.

Any comments related to this ICR should be submitted to EPA and OMB within 30 days of this notice. EPA's policy is that public comments, whether submitted electronically or in paper, will be made available for public viewing in EDOCKET as EPA receives them and without change, unless the comment contains copyrighted material, Confidential Business Information (CBI), or other information whose public disclosure is restricted by statute. When EPA identifies a comment containing copyrighted material, EPA will provide a reference to that material in the version of the comment that is placed in EDOCKET. The entire printed comment, including the copyrighted material, will be available in the public docket. Although identified as an item in the official docket, information claimed as CBI, or whose disclosure is otherwise restricted by statute, is not included in the official public docket, and will not be available for public viewing in EDOCKET. For further information about the electronic docket, *see* EPA's **Federal Register** notice describing the electronic docket at 67 FR 38102 (May 31, 2002), or go to *www.epa.gov/edocket.*

Title: NESHAP for Epoxy Resin and Non-Nylon Polyamide Production (40 CFR part 63, subpart W) (Renewal).

Abstract: This ICR contains recordkeeping and reporting requirements that are mandatory for compliance with 40 CFR part 63, subpart W, regulating hazardous air pollutants from process vents, storage vessels, wastewater systems and equipment leaks. The standards require mandatory recordkeeping and reporting to document process information related to the source's ability to comply with the standards. This information is used by the Agency to identify sources subject to the standards and to insure that the maximum achievable control technology is being properly applied. Section 112 of the Clean Air Act, as amended in 1990, requires that EPA establish standards to limit emissions of hazardous air pollutants (HAPs) from stationary sources. The sources subject to these provisions emit the HAPs epichlorohydrin, and in lesser amounts, hydrochloric acid and methanol. In the Administrator's judgment, hazardous air pollutant emissions in this industry cause or contribute to air pollution that may be reasonably expected to endanger public health or welfare. Respondents are owners or operators of new and existing facilities that manufacture polymers and resins from epichlorohydrin. Source categories include basic liquid epoxy resin (BLR) producers and producers of epichlorohydrin-modified non-nylon polyamide resins, also known as wet strength resins (WSR).

All reports are sent to the delegated State or Local Agency. In the event that there is no such delegated authority, the reports are sent directly to the EPA Regional Office.

An agency may not conduct or sponsor, and a person is not required to respond to, a collection of information unless it displays a currently valid OMB Control Number. The OMB Control Numbers for EPA's regulations are listed in 40 CFR part 9 and 48 CFR chapter 15, and are identified on the form and/or instrument, if applicable.

Burden Statement: The annual public reporting and recordkeeping burden for this collection of information are estimated to average 214 hours per response. Burdens means the total time, effort, or financial resources expended by persons to generate, maintain, retain, or disclose or provide information to or for a Federal agency. This includes the time needed to review instructions; develop, acquire, install, and utilize technology and systems for the purposes of collecting, validating, and verifying information, processing and maintaining information, and disclosing and providing information; adjust the existing ways to comply with any previously applicable instructions and requirements; train personnel to be able to respond to a collection of information; search data sources;

complete and review the collection of information; and transmit or otherwise disclose the information.

Respondents/Affected Entities: Owners and operators of new and existing facilities that manufacture polymers and resins from epichlorohydrin.

Estimated Number of Respondents: 7.

Frequency of Response: Semiannually, quarterly and initially.

Estimated Total Annual Hour Burden: 3,853 hours.

Estimated Total Annual Costs: $252,711, which includes $0 annualized capital/startup costs, $9,000 annual O&M costs, and $243,711 annual labor costs.

Changes in the Estimates: There is a decrease of 672 hours in the total estimated burden currently identified in the OMB Inventory of Approved ICR Burdens. This decrease in the hourly burden from the most recently approved ICR is due to a decrease in the number of sources. There are thirteen sources in the active ICR compared to seven sources in the renewal.

Dated: July 14, 2004.

Oscar Morales,

Director, Collection Strategies Division.

[FR Doc. 04–17305 Filed 7–28–04; 8:45 am]

BILLING CODE 6560–50–P

ENVIRONMENTAL PROTECTION AGENCY

[OECA–2003–0139; FRL–7793–1]

Agency Information Collection Activities; Submission for OMB Review and Approval; Comment Request; NESHAP for Primary Aluminum Reduction Plants (Renewal), EPA ICR Number 1767.04, OMB Control Number 2060–0360

AGENCY: Environmental Protection Agency (EPA).

ACTION: Notice.

SUMMARY: In compliance with the Paperwork Reduction Act, this document announces that an Information Collection Request (ICR) has been forwarded to the Office of Management and Budget (OMB) for review and approval. This is a request to renew an existing approved collection. This ICR is scheduled to expire on September 30, 2004. Under OMB regulations, the Agency may continue to conduct or sponsor the collection of information while this submission is pending at OMB. This ICR describes the nature of the information collection and its estimated burden and cost.

DATES: Additional comments may be submitted on or before August 30, 2004.

ADDRESSES: Submit your comments, referencing docket ID number OECA–2003–0139, to (1) EPA online using EDOCKET (our preferred method), by e-mail to *docket.oeca@epa.gov,* or by mail to: EPA Docket Center (EPA/DC), Environmental Protection Agency, Enforcement and Compliance Docket and Information Center, EPA West, Mail Code 2201T, 1200 Pennsylvania Avenue, NW., Washington, DC 20460, and (2) OMB at: Office of Information and Regulatory Affairs, Office of Management and Budget (OMB), Attention: Desk Officer for EPA, 725 17th Street, NW., Washington, DC 20503.

FOR FURTHER INFORMATION CONTACT: Learia Williams, Compliance Assessment and Media Programs Division (Mail Code 2223A), Office of Compliance, Environmental Protection Agency, 1200 Pennsylvania Avenue, NW., Washington, DC 20460; telephone number: (202) 564–4113; fax number: (202) 564–0050; e-mail address: *williams.learia@epa.gov.*

SUPPLEMENTARY INFORMATION: EPA has submitted the following ICR to OMB for review and approval according to the procedures prescribed in 5 CFR 1320.12. On November 3, 2003 (68 FR 62289), EPA sought comments on this ICR pursuant to 5 CFR 1320.8(d). EPA received no comments.

EPA has established a public docket for this ICR under Docket ID Number OECA–2003–0139, which is available for public viewing at the Enforcement and Compliance Docket and Information Center in the EPA Docket Center (EPA/DC), EPA West, Room B102, 1301 Constitution Avenue, NW., Washington, DC. The EPA Docket Center Public Reading Room is open from 8:30 a.m. to 4:30 p.m., Monday through Friday, excluding legal holidays. The telephone number for the Reading Room is (202) 566–1744, and the telephone number for the Enforcement and Compliance Docket and Information Center Docket is: (202) 566–1752. An electronic version of the public docket is available through EPA Dockets (EDOCKET) at *http://www.epa.gov/edocket.* Use EDOCKET to submit or view public comments, access the index listing of the contents of the public docket, and to access those documents in the public docket that are available electronically. When in the system, select ''search,'' then key in the docket ID number identified above.

Any comments related to this ICR should be submitted to EPA and OMB within 30 days of this notice. EPA's policy is that public comments, whether submitted electronically or in paper, will be made available for public viewing in EDOCKET as EPA receives them and without change, unless the comment contains copyrighted material, Confidential Business Information (CBI), or other information whose public disclosure is restricted by statute. When EPA identifies a comment containing copyrighted material, EPA will provide a reference to that material in the version of the comment that is placed in EDOCKET. The entire printed comment, including the copyrighted material, will be available in the public docket. Although identified as an item in the official docket, information claimed as CBI, or whose disclosure is otherwise restricted by statute, is not included in the official public docket, and will not be available for public viewing in EDOCKET. For further information about the electronic docket, *see* EPA's **Federal Register** notice describing the electronic docket at 67 FR 38102 (May 31, 2002), or go to *www.epa.gov/edocket.*

Title: NESHAP for Primary Aluminum Reduction Plants (Renewal).

Abstract: The National Emission Standards for Hazardous Air Pollutants (NESHAP) for Primary Aluminum Reduction Plants (40 CFR part 63, subpart LL) was proposed on September 26, 1996 and promulgated on October 7, 1997. These standards apply to the owners or operators of new or existing potlines, paste production plants, or anode bake furnaces associated with primary aluminum production and located at a major source, and for each new pitch storage tank associated with a primary aluminum reduction plant.

In order to ensure compliance with the standards, adequate recordkeeping and reporting is necessary. This information enables the Agency to identify the sources subject to the standard; ensure initial compliance with emission limits, and verify continuous compliance with the standard.

This rule requires written notification when: an area source increases its emissions such that it becomes a major source; the initial startup is before the effective date of the standard; the effective date of a new or reconstructed source is after the effective date of the standard, and for which an application for approval of construction or reconstruction is not required; there is an intent to construct a new major source or reconstruct a major source after the effective date of the standard, and for which an application for approval or construction or reconstruction is required; an initial performance test occurs; an initial

compliance status is submitted; an affected source intends to use an hydrogen fluoride (HF) continuous emission monitor; and owner or operator develops and submits an engineering plan to the applicable regulatory authority upon request. In addition, sources are required to: submit results of performance tests; provide semiannual reports unless quarterly reports are required as a result of excess emissions; develop a startup, shutdown, and malfunction plan; and maintain records for a period of five years following the date of each occurrence, measurement, maintenance, corrective action report, or record.

All reports are sent to the delegated state or local agency. In the event that there is no such delegated authority, the reports are sent directly to the EPA regional office.

An agency may not conduct or sponsor, and a person is not required to respond to, a collection of information unless it displays a currently valid OMB Control Number. The OMB Control Numbers for EPA's regulations are listed in 40 CFR part 9 and 48 CFR chapter 15, and are identified on the form and/or instrument, if applicable.

Burden Statement: The annual public reporting and recordkeeping burden for this collection of information is estimated to average 2,189 (rounded) hours per response. Burden means the total time, effort, or financial resources expended by persons to generate, maintain, retain, or disclose or provide information to or for a Federal agency. This includes the time needed to review instructions; to develop, acquire, install, and utilize technology and systems for the purposes of collecting, validating, and verifying information, processing and maintaining information, and disclosing and providing information; to adjust the existing ways to comply with any previously applicable instructions and requirements; to train personnel to be able to respond to a collection of information; to search data sources; complete and review the collection of information; and to transmit or otherwise disclose the information.

Respondents/Affected Entities: Owner/operators of new or existing primary aluminum reduction plants.

Estimated Number of Respondents: 23.

Frequency of Response: Initially, quarterly, semiannually, on occasion.

Estimated Total Annual Hour Burden: 122,607 hours.

Estimated Total Annual Costs: $7,870,195, which accounts for annual O&M costs of $114,000, no capital/startup costs, and Respondent Labor costs of $7,756,195.

Changes in the Estimates: There is an increase of 1,330 hours in the total estimated burden currently identified in the OMB Inventory of Approved ICR Burden. This increase was due to an increase in the number of responses.

Dated: July 21, 2004.

Oscar Morales,

Director, Collection Strategies Division.

[FR Doc. 04–17307 Filed 7–28–04; 8:45 am]

BILLING CODE 6560–50–P

ENVIRONMENTAL PROTECTION AGENCY

[FRL–7793–2]

Agency Information Collection Activities OMB Responses

AGENCY: Environmental Protection Agency (EPA).

ACTION: Notice.

SUMMARY: This document announces the Office of Management and Budget's (OMB) responses to Agency clearance requests, in compliance with the Paperwork Reduction Act (44 U.S.C. 3501 *et seq.*). An agency may not conduct or sponsor, and a person is not required to respond to, a collection of information unless it displays a currently valid OMB control number. The OMB control numbers for EPA's regulations are listed in 40 CFR part 9 and 48 CFR chapter 15.

FOR FURTHER INFORMATION CONTACT: Susan Auby (202) 566–1672, or e-mail at *auby.susan@epa.gov* and please refer to the appropriate EPA Information Collection Request (ICR) Number.

SUPPLEMENTARY INFORMATION:

OMB Responses to Agency Clearance Requests

OMB Approvals

EPA ICR No. 1611.05; NESHAP for Chromium Emissions From Hard and Decorative Chromium Electroplating and Chromium Anodizing Tanks; in 40 CFR part 63, subpart N; was approved 06/30/2004; OMB Number 2060–0327; expires 06/30/2007.

EPA ICR No. 1666.06; NESHAP for Ethylene Oxide Emissions from Sterilization Facilities; in 40 CFR part 63, subpart O; was approved 06/30/2004; OMB Number 2060–0283; expires 06/30/2007.

EPA ICR No. 1716.04; NESHAP for Wood Furniture Manufacturing Operations; in 40 CFR part 63, subpart JJ; was approved 06/30/2004; OMB Number 2060–0324; expires 06/30/2007.

EPA ICR No. 1781.03; NESHAP for Pharmaceuticals Production; in 40 CFR part 63, subpart GGG; was approved 06/30/2004; OMB Number 2060–0358; expires 06/30/2007.

EPA ICR No. 1780.03; Voluntary Cover Sheet for TSCA Submissions; was approved 06/29/2004; OMB Control Number 2070–0156; expires 06/30/2007.

EPA ICR No. 1664.05; National Oil and Hazardous Substances Pollution Contingency Plan; in 40 CFR part 300, subpart J; OMB Number 2050–0141; was approved 06/29/2004; expires 06/30/2007.

EPA ICR No. 1949.04; National Environmental Performance Track Program (Outreach Award, Mentoring Program Registration, and Customer Satisfaction Questionnaire); was approved 06/22/2004; OMB Number 2010–0032; expires 08/31/2006.

EPA ICR No. 2079.02; NESHAP for Metal Can Manufacturing Surface Coating; in 40 CFR part 63, subpart KKKK, was approved 06/17/2004; OMB Number 2060–0541; expires 06/30/2007.

EPA ICR No. 1799.03; NESHAP for Mineral Wood Production; in 40 CFR part 63, subpart DDD; was approved 06/17/2004; OMB Number 2060–0362; expires 06/30/2007.

EPA ICR No. 1967.02; NESHAP for Stationary Combustion Turbines; in 40 CFR part 63, subpart YYYY (Final Rule), was approved 06/17/2004; OMB Number 2060–0540; expires 06/30/2007.

EPA ICR No. 1135.08; NSPS for Magnetic Tape Coating Facilities; in 40 CFR part 60; subpart SSS; was approved 06/15/2004; OMB Number 2060–0171; expires 06/30/2007.

EPA ICR No. 1659.05; NESHAP for Gasoline Distribution Facilities (Stage 1); in 40 CFR part 63, subpart R; was approved 06/17/2004; OMB Number 2060–0325; expires 06/30/2007.

Comment Filed

EPA ICR No. 1189.13; Identification Listing and Rulemaking Petitions (Proposed Rule for Organic Dyes and/or Pigments Production Wastes); in 40 CFR 261.3(a)(2)(iv)(A)–(G); OMB Number 2050–0053; on 06/15/2004 OMB filed a comment.

EPA ICR No. 1897.07; Nonroad Diesel Engines (Final Rule for Nonroad Large SI Engines and Marine Diesel Engines); in 40 CFR part 94, and 40 CFR part 1048; OMB Number 2060–0460; on 07/02/2004 OMB filed a comment.

EPA ICR No. 1432.23; Recordkeeping and Periodic Reporting of the Production, Import, Recycling, Destruction, Transshipment and Feedstock Use of Ozone Depleting Substances Process for Exempting Critical Users; in 40 CFR part 82, subpart A; OMB Number 2060–0170; on 07/09/2004 OMB filed a comment.

EPA ICR No. 2106.01; Revisions to the Definition of Solid Waste (Proposed rule) in 40 CFR part 261(g)(1) through (4), 40 CFR 261.2(c)(3); on 06/29/2004 OMB filed a comment.

EPA ICR No. 1718.07; Fuel Quality Regulations (Final Rule for Nonroad, Locomotive, and Marine Diesel Fuel); in 40 CFR part 89, 40 CFR 80.597, 40 CFR 80.594, 40 CFR 80.592, 40 CFR 80.593, 40 CFR 80.590, 40 CFR 80.591, 40 CFR 80.550, 40 CFR 80.555, 40 CFR 80.560, 40 CFR 80.561, 40 CFR 80.607; OMB Number 2060–0308; on 07/16/2004 OMB filed a comment.

Short Term Extensions

EPA ICR No. 1953.02; Information Collection Request for Best Management Practices Alternatives, Effluent, Limitations Guidelines and Standards, Oil and Gas Extraction Point Source Category; in 40 CFR part 435; OMB Number 2040–0230; on 07/16/2004 OMB extended the expiration date to 10/31/2004.

Dated: July 21, 2004.

Oscar Morales,

Director, Collection Strategies Division.

[FR Doc. 04–17308 Filed 7–28–04; 8:45 am]

BILLING CODE 6560–50–P

ENVIRONMENTAL PROTECTION AGENCY

[FRL–7794–2]

Science Advisory Board Staff Office; Request for Nominations for the Science Advisory Board Metals Risk Assessment Framework Review Panel

AGENCY: Environmental Protection Agency (EPA).

ACTION: Notice.

SUMMARY: The EPA Science Advisory Board (SAB) Staff Office announces the formation of a new SAB review panel known as the Metals Risk Assessment Framework Review Panel, and is soliciting nominations for members of the Panel.

DATES: Nominations should be submitted by August 19, 2004, per the instructions below.

FOR FURTHER INFORMATION CONTACT: Any member of the public wishing further information regarding this Request for Nominations may contact Dr. Thomas Armitage, Designated Federal Officer (DFO), via telephone/voice mail at (202) 343–9995; via e-mail at *armitage.thomas@epa.gov;* or at the U.S. EPA Science Advisory Board (1400F), 1200 Pennsylvania Ave., NW., Washington, DC 20460. General information about the SAB can be found in the SAB Web site at *http://www.epa.gov/sab.*

SUPPLEMENTARY INFORMATION: *Background:* A basic input to the decision-making process for many EPA programs is an assessment of potential risks posed by environmental contaminants including metal or metal compounds. As such, EPA has been undertaking an effort to develop cross-agency guidance for assessing the human health and ecological hazards and risks of metals and metal compounds. As recommended in EPA's *Metals Action Plan,* the Agency developed the draft guidance document, *Framework for Metals Risk Assessment,* to supplement previous EPA guidance for use in site-specific risk assessments, criteria derivation, and other similar Agency activities related to metals.

The *Framework for Metals Risk Assessment* is organized around the risk assessment paradigm. The document provides a conceptual model that highlights areas where consideration of metal-specific information is necessary and advantageous when conducting risk assessments. It outlines recommendations for conducting risk assessment for metals and metal compounds, based on the unique attributes of these compounds. The guidance document also discusses metal-specific issues, methods, and tools to be considered when conducting hazard and risk assessments. Specific sections of the guidance address metal-specific issues related to environmental chemistry, exposure, bioaccumulation and bioavailability, ecological effects, and human health effects. In addition, the guidance discusses research underway, planned, and needed to reduce uncertainty in metals risk assessment.

The EPA SAB Staff Office is announcing the formation of a new panel to conduct a peer review of EPA's *Framework for Metals Risk Assessment.* As part of the SAB's mission, established by 42 U.S.C. 4365, to provide independent scientific and technical advice, consultation, and recommendations to the EPA Administrator on the technical bases for EPA policies and regulations, the work of this panel is expected to continue until the review is complete.

The SAB is a chartered Federal advisory committee, that reports directly to the EPA Administrator. The Metals Risk Assessment Framework Review Panel will provide advice through the chartered SAB. The Metals Risk Assessment Framework Review Panel will comply with the openness provisions of the Federal Advisory Committee Act (FACA) and all appropriate SAB procedural policies, including the SAB process for panel formation described in the *Overview of the Panel Formation Process at the Environmental Protection Agency Science Advisory Board,* which can be found on the SAB's Web site at: *http://www.epa.gov/sab/pdf/ec0210.pdf.*

Tentative Charge to the Panel: The specific details of the charge remain to be finalized. However, in general, the Panel will assess the scientific and technical adequacy of the document in providing guidance to assess potential risks posed by metals or metal compounds to human health and the environment. The Panel will assess the scientific validity and completeness of the technical content in various sections of the document, and the appropriateness of tools, approaches, and recommendations provided.

EPA Technical Contact: For technical inquiries concerning the draft *Framework for Metals Risk Assessment,* please contact Dr. William Wood, U.S. EPA Office of Research and Development, Risk Assessment Forum (8601–D), 1200 Pennsylvania Ave., NW., Washington, DC 20460; telephone (202) 564–3361; facsimile (202) 564–0062; e-mail: *forum.risk@epa.gov.*

Request for Nominations: The SAB Staff Office is requesting nominations of recognized experts in one or more of the following areas: (a) Environmental chemistry of metals, (b) environmental fate and transport of metals, (c) bioavailability of metals, (d) routes of exposure of aquatic and terrestrial species to metals, (e) routes of human exposure to metals, (f) human health effects of exposure to metals, and (g) ecological effects of exposure to metals.

Process and Deadline for Submitting Nominations: Any interested person or organization may nominate individuals qualified in the areas of expertise described above to serve on the Panel. Nominations should be submitted in electronic format through the *Form for Nominating Individuals to Panels of the EPA Science Advisory Board* provided on the SAB Web site, *http://www.epa.gov/sab.* The form can be accessed through a link on the blue navigational bar on the SAB Web site, *http://www.epa.gov/sab.* To be considered, all nominations must include the information required on that form.

Anyone who is unable to submit nominations using this form, and any questions concerning any aspects of the nomination process may contact the DFO, as indicated above in this notice. Nominations should be submitted in time to arrive no later than August 19,

2004. Any questions concerning either this process or any other aspects of this notice should be directed to the DFO.

The SAB will acknowledge receipt of the nomination and inform nominators of the panel selected. From the nominees identified by respondents to this **Federal Register** notice (termed the ''Widecast''), SAB Staff will develop a smaller subset (known as the ''Short List'') for more detailed consideration. Criteria used by the SAB Staff in developing this Short List are given at the end of the following paragraph. The Short List will be posted on the SAB Web site at: *http://www.epa.gov/sab*, and will include, for each candidate, the nominee's name and biosketch. Public comments on the Short List will be accepted for 21 calendar days. During this comment period, the public will be requested to provide information, analysis or other documentation on nominees that the SAB Staff should consider in evaluating candidates for the Panel.

For the SAB, a balanced review panel (*i.e.*, committee, subcommittee, or panel) is characterized by inclusion of candidates who possess the necessary domains of knowledge, the relevant scientific perspectives (which, among other factors, can be influenced by work history and affiliation), and the collective breadth of experience to adequately address the charge. Public responses to the Short List candidates will be considered in the selection of the panel, along with information provided by candidates and information gathered by SAB Staff independently of the background of each candidate (*e.g.*, financial disclosure information and computer searches to evaluate a nominee's prior involvement with the topic under review). Specific criteria to be used in evaluation of an individual subcommittee member include: (a) Scientific and/or technical expertise, knowledge, and experience (primary factors); (b) absence of financial conflicts of interest; (c) scientific credibility and impartiality; (d) availability and willingness to serve; and (e) ability to work constructively and effectively in committees.

Short List candidates will also be required to fill-out the ''Confidential Financial Disclosure Form for Special Government Employees Serving on Federal Advisory Committees at the U.S. Environmental Protection Agency'' (EPA Form 3110–48). This confidential form allows Government officials to determine whether there is a statutory conflict between that person's public responsibilities (which includes membership on an EPA Federal advisory committee) and private interests and activities, or the appearance of a lack of impartiality, as defined by Federal regulation. The form may be viewed and downloaded from the following URL address: *http://www.epa.gov/sab/pdf/epaform3110–48.pdf.*

In addition to reviewing background material, Panel members will be asked to attend one public face-to-face meeting over the anticipated course of the advisory activity.

Dated: July 23, 2004.

Vanessa T. Vu,

Director, EPA Science Advisory Board Staff Office.

[FR Doc. 04–17309 Filed 7–28–04; 8:45 am]

BILLING CODE 6560–50–P

ENVIRONMENTAL PROTECTION AGENCY

[FRL–7792–6]

Notice of a Public Meeting To Discuss Regulatory Determinations for the Second Contaminant Candidate List (CCL 2) and Updates for Unregulated Contaminant Monitoring and the CCL 3

AGENCY: Environmental Protection Agency.

ACTION: Notice of a public meeting.

SUMMARY: The Environmental Protection Agency (EPA) is holding a public meeting to discuss the status and process of making regulatory determinations for contaminants on the second drinking water Contaminant Candidate List (CCL 2). The Agency will discuss its preliminary approach to evaluate contaminants on the CCL 2 and obtain input from meeting participants about the process before making and publishing preliminary regulatory determinations. In addition to discussions about the second round of regulatory determinations, the Agency also plans to provide updates on the Unregulated Contaminant Monitoring project and the Agency's initial efforts in developing the third Contaminant Candidate List (CCL 3).

DATES: The stakeholder meeting will be held from 9 a.m. to 4 p.m. (e.d.t.), on Wednesday, September 15, 2004.

ADDRESSES: The meeting will be held on the first floor of the East Building of EPA Headquarters in Room 1153. The address is EPA East, 1201 Constitution Ave., NW., Washington, DC. The main entrance to the building on Constitution Ave. is a short distance from the Federal Triangle Metro Station, which is located on 12th Street between Constitution and Pennsylvania Aves. and is served by the Blue and Orange Lines. You will need to present a photo I.D. at the security desk when entering the building.

FOR FURTHER INFORMATION CONTACT: For technical inquiries regarding EPA's Regulatory Determinations for contaminants on CCL 2 contact: Ms. Wynne Miller at (202) 564–4887 or by e-mail: *miller.wynne@epa.gov;* or Mr. Brian Rourke at (202) 564–5241 or by e-mail: *rourke.brian@epa.gov.* For technical inquiries regarding EPA's Unregulated Contaminant Monitoring contact: Mr. Dan Hautman at (513) 569–7274 or by e-mail: *hautman.dan@epa.gov.* For technical inquiries regarding EPA's initial efforts in developing the CCL 3 contact: Mr. Tom Carpenter at (202) 564–4885 or by e-mail: *carpenter.thomas@epa.gov;* or Ms. Yvette Selby (202) 564–5245 or by e-mail: *selby.yvette@epa.gov.* Additional information on these and other EPA activities under the Safe Drinking Water Act is available at the Safe Drinking Water Hotline at (800) 426–4791.

For registration and general information about this meeting, please contact Ms. Rose Odom at Environomics, Inc., 4405 East-West Highway, Suite 307, Bethesda, Maryland, 20814; by phone at (301) 657–7762, extension 14; by fax at (301) 657–9025; or by e-mail at *odom@environomics.com.*

SUPPLEMENTARY INFORMATION: The purpose of the public meeting is to obtain input from meeting participants about EPA's regulatory determination process before the Agency makes and publishes its preliminary regulatory determinations, as required under the Safe Drinking Water Act (SDWA). SDWA directs the Agency to select five or more contaminants from the CCL and determine whether or not to regulate these contaminants with a National Primary Drinking Water Regulation (NPDWR). EPA published the first CCL containing 60 contaminants in 1998 and made final regulatory determinations for 9 contaminants on the CCL in 2003. On April 2, 2004, EPA announced its preliminary decision to carry over the remaining 51 contaminants on the 1998 CCL as the draft CCL 2. EPA must make regulatory determinations for at least five contaminants on the second CCL by August 2006.

The Agency also plans to provide updates on the Unregulated Contaminant Monitoring project and the Agency's initial efforts in developing the third Contaminant Candidate List (CCL 3).

Those registered by September 3rd will receive background materials prior to the meeting. Please note that attendees will be required to pass

through security checks at the front desk and obtain a visitor's badge. Pre-registration for this meeting will help us facilitate your check-in.

The meeting will be held in a building which is accessible to persons using wheel chairs or scooters. Any person needing special accommodations at this meeting, including wheel chair or scooter access, should contact Ms. Rose Odom at Environomics (contact information provided in the previous section) at least 5 business days before the meeting so that the Agency can make appropriate arrangements.

Dated: July 22, 2004.

Cynthia C. Dougherty,

Director, Office of Ground Water and Drinking Water.

[FR Doc. 04–17306 Filed 7–28–04; 8:45 am]

BILLING CODE 6560–50–P

FEDERAL COMMUNICATIONS COMMISSION

Public Information Collections Approved by Office of Management and Budget

July 20, 2004.

SUMMARY: The Federal Communications Commission (FCC) has received Office of Management and Budget (OMB) approval for the following public information collections pursuant to the Paperwork Reduction Act of 1995, Public Law 104–13. An agency may not conduct or sponsor and a person is not required to respond to a collection of information unless it displays a currently valid control number.

FOR FURTHER INFORMATION CONTACT: Arthur Lechtman, Federal Communications Commission, 445 12th Street, SW., Washington, DC 20554, (202) 418–1465 or via the Internet at *Arthur.Lechtman@fcc.gov*.

SUPPLEMENTARY INFORMATION:

OMB Control No.: 3060–1059.

OMB Approval Date: 3/2/2004.

Expiration Date: 3/31/2007.

Title: Revision of the Commission's Rules to Ensure Compatibility with Enhanced 911 Emergency Calling Systems; Amendment of Parts 2 and 25 to Implement the Global Mobile Personal Communications by Satellite (GMPCS) Memorandum of Understanding and Arrangements; Petition of the National Telecommunications and Information Administration to Amend Part 25 of the Commission's Rules to Establish Emissions Limits for Mobile and Portable Earth Stations Operating in the 1610–1660.5 MHz Band.

Form No.: N/A.

Estimated Annual burden: 25 respondents; 75 total annual burden hours; 1–2 hours per respondent.

Needs and Uses: The Commission proposes that Mobile Satellite Service (MSS) carriers subject to the emergency call center requirement (47 CFR 25.284) prepare and submit a report on their plans for implementing call centers no later than three months prior to the call center's effective date (*i.e.*, 12 months after **Federal Register** publication of Revision of the Commission's Rules to Ensure Compatibility With Enhanced 911 Emergency Calling Systems, CC Docket No. 94–102, Amendment of Parts 2 and 25 to Implement the Global Mobile Personal Communications by Satellite (GMPCS) Memorandum of Understanding and Arrangements; Petition of the National Telecommunications and Information Administration to Amend Part 25 of the Commission's Rules to Establish Emissions Limits for Mobile and Portable Earth Stations Operating in the 1610–1660.5 MHz Band, IB Docket No. 99–67, Report and Order and Second Further Notice of Proposed Rulemaking, FCC 03–290 (rel. Dec. 1, 2003)). These advance reports would assist Commission efforts to monitor call center development and provide the public with valuable information about MSS emergency services. In addition, the Commission proposes recordkeeping and reporting requirements that MSS carriers would be subject to after the call center rule's effective date. The Commission proposed that MSS carriers record data on the number of calls that their emergency call centers receive, the number of calls that require forwarding to a Public Safety Answering Point (PSAP), and the success rate in handing off calls to the proper PSAP. Furthermore, the Commission is seeking comment on whether MSS carriers should record and store this information themselves, subject to Commission inspection at any time, or whether MSS carriers should file the information in the form of a report once a year. The collection of call data would allow the Commission to monitor compliance with the call center requirement and track usage trends. The Commission also seeks comment on sunset provisions for any recordkeeping or reporting requirements.

Federal Communications Commission.

William F. Caton,

Deputy Secretary.

[FR Doc. 04–17239 Filed 7–28–04; 8:45 am]

BILLING CODE 6712–01–P

FEDERAL COMMUNICATIONS COMMISSION

Notice of Public Information Collection(s) Being Reviewed by the Federal Communications Commission, Comments Requested

July 22, 2004.

SUMMARY: The Federal Communications Commission, as part of its continuing effort to reduce paperwork burden invites the general public and other Federal agencies to take this opportunity to comment on the following information collection(s), as required by the Paperwork Reduction Act (PRA) of 1995, Public Law 104–13. An agency may not conduct or sponsor a collection of information unless it displays a currently valid control number. No person shall be subject to any penalty for failing to comply with a collection of information subject to the Paperwork Reduction Act that does not display a valid control number. Comments are requested concerning (a) whether the proposed collection of information is necessary for the proper performance of the functions of the Commission, including whether the information shall have practical utility; (b) the accuracy of the Commission's burden estimate; (c) ways to enhance the quality, utility, and clarity of the information collected; and (d) ways to minimize the burden of the collection of information on the respondents, including the use of automated collection techniques or other forms of information technology.

DATES: Written Paperwork Reduction Act (PRA) comments should be submitted on or before September 27, 2004. If you anticipate that you will be submitting comments, but find it difficult to do so within the period of time allowed by this notice, you should advise the contact listed below as soon as possible.

ADDRESSES: Direct all Paperwork Reduction Act (PRA) comments to Les Smith, Federal Communications Commission, Room 1–A804, 445 12th Street, SW., Washington, DC 20554 or via the Internet to *Leslie.Smith@fcc.gov.*

FOR FURTHER INFORMATION CONTACT: For additional information or copies of the information collection(s), contact Les Smith at (202) 418–0217 or via the Internet at *Leslie.Smith@fcc.gov.*

SUPPLEMENTARY INFORMATION:

OMB Control Number: 3060–0095.

Title: Multi-Channel Video Programming Distributors Annual Employment Report, FCC Form 395–A.

Type of Review: Extension of currently approved collection.

Form Number: FCC 395–A.

Respondents: Business or other for-profit entities.

Number of Respondents: 2,500.

Estimated Time per Response: 53 minutes (0.88 hours).

Frequency of Response: Recordkeeping; annual reporting requirement.

Total Annual Burden: 2,200 hours.

Total Annual Cost: None.

Privacy Impact Assessment: No impact(s).

Needs and Uses: FCC Form 395–A, ''The Multi-Channel Video Programming Distributor Annual Employment Report,'' is a data collection device used to assess industry employment trends and provide reports to Congress. The report identifies employees by gender and race/ethnicity in fifteen job categories. FCC Form 395–A contains a grid which collects data on full and part-time employees and requests a list of employees by job title, indicating the job category and full or part-time status of the position. Every cable entity with 6 or more full-time employees and all Satellite Master Antenna Television Systems (SMATV) serving 50 or more subscribers and having 6 or more full-time employees must complete Form 395–A in its entirety and file it by September 30 each year. However, cable entities with 5 or fewer full-time employees are not required to file but if they do, they need to complete and file only Sections I, II and VIII of the FCC Form 395–A, and thereafter need not file again unless their employment increases. In addition, cable entities with 6 or more full-time employees will file a Supplemental Investigation Sheet once every 5 years.

On June 4, 2004, the FCC released the Third Report and Order and Fourth Notice of Proposed Rulemaking (3rd R&O), *In the Matter of Review of the Commission's Broadcast and Cable Equal Employment Opportunity Rules and Policies,* MM Docket No. 98–204, FCC 04–103, in which it considers issues relating to the Annual Employment Report forms, including FCC Form 395–A, ''The Multi-Channel Video Programming Distributor Annual Employment Report.'' In the 3rd R&O, the Commission is adopting revised rules for MVPDs to file FCC Form 395–A, which cable and other MVPDs will use to file annual employment reports. The intent of this 3rd R&O is to update rules for MVPDs to file Form 395–A consistent with new rules adopted in the 2nd R&O. The intent of the Fourth Notice of Proposed Rulemaking is to provide time for cable and other MVPDs and the public to address the issue of whether the Commission should keep these forms confidential after they are filed. With the effective date of the rule revisions adopted in the 3rd R&O, MVPDs and broadcasters must start keeping records of their employees so they can prepare their annual employment reports due to be filed on September 30, 2004.

OMB Control Number: 3060–0390.

Title: Broadcast Station Annual Employment Report, FCC Form 395–B.

Form Number: FCC Form 395–B.

Type of Review: Extension of currently approved collection.

Respondents: Business or other for-profit entities; not-for-profit institutions.

Number of Respondents: 14,000.

Estimated Time per Response: 0.88 hours.

Frequency of Response: Annual reporting requirement.

Total Annual Burden: 12,320 hours.

Total Annual Costs: None.

Privacy Impact Assessment: No impact(s).

Needs and Uses: FCC Form 395–B, ''The Broadcast Station Annual Employment Report,'' is used to assess industry employment trends and provide reports to Congress. Licensees with five or more full-time employees are required to file Form 395–B on or before September 30th of each year. The form is a data collection device used to compile statistics on the workforce employed by broadcast licensees/permittees. The report identifies each staff member by gender and race/ethnicity in each of the nine major job categories. On June 4, 2004, the FCC released the Third Report and Order and Fourth Notice of Proposed Rulemaking (3rd R&O), *In the Matter of Review of the Commission's Broadcast and Cable Equal Employment Opportunity Rules and Policies,* MM Docket No. 98–204, FCC 04–103, in which it considers issues relating to the Annual Employment Report forms, including Form 395–B, ''The Broadcast Station Annual Employment Report.'' In the 3rd R&O, the Commission is adopting revised rules requiring broadcasters and multichannel video programming distributors (MVPDs) to file annual employment reports. Radio and television broadcasters will use Form 395–B to file annual employment reports. The intent of this 3rd R&O is to reinstate and update requirements for broadcasters and MVPDs to file annual employment reports. The intent of the Fourth Notice of Proposed Rulemaking is to provide time for MVPDs, broadcast licensees, and the public to address the issue of whether the Commission should keep these forms confidential after they are filed. With the effective date of the rule revisions adopted in the 3rd R&O, MVPDs and broadcasters must start keeping records of their employees so they can prepare their annual employment reports due to be filed on or before September 30, 2004.

Federal Communications Commission.

William F. Caton,

Deputy Secretary.

[FR Doc. 04–17242 Filed 7–28–04; 8:45 am]

BILLING CODE 6712–01–P

FEDERAL COMMUNICATIONS COMMISSION

Notice of Public Information Collection(s) Being Submitted to OMB for Review and Approval

July 21, 2004.

SUMMARY: The Federal Communications Commissions, as part of its continuing effort to reduce paperwork burden invites the general public and other Federal agencies to take this opportunity to comment on the following information collection, as required by the Paperwork Reduction Act of 1995, Public Law 104–13. An agency may not conduct or sponsor a collection of information unless it displays a currently valid control number. No person shall be subject to any penalty for failing to comply with a collection of information subject to the Paperwork Reduction Act (PRA) that does not display a valid control number. Comments are requested concerning (a) whether the proposed collection of information is necessary for the proper performance of the functions of the Commission, including whether the information shall have practical utility; (b) the accuracy of the Commission's burden estimate; (c) ways to enhance the quality, utility, and clarity of the information collected; and (d) ways to minimize the burden of the collection of information on the respondents, including the use of automated collection techniques or other forms of information technology.

DATES: Written comments should be submitted on or before August 30, 2004. If you anticipate that you will be submitting comments, but find it difficult to do so within the period of time allowed by this notice, you should advise the contact listed below as soon as possible.

ADDRESSES: Direct all comments to Les Smith, Federal Communications Commission, Room 1–A804, 445 12th Street, SW., Washington, DC 20554 or via the Internet to *Leslie.Smith@fcc.gov* or Kristy L. LaLonde, Office of Management and Budget (OMB), Room 10236 NEOB, Washington, DC 20503,

(202) 395–3087 or via the Internet at *Kristy_L._LaLonde@omb.eop.gov*.

FOR FURTHER INFORMATION CONTACT: For additional information or copy of the information collection(s) contact Les Smith at (202) 418–0217 or via the Internet at *Leslie.Smith@fcc.gov.*

SUPPLEMENTARY INFORMATION:

OMB Control Number: 3060–0754.

Title: Children's Television Programming Report, FCC Form 398.

Form Number: FCC 398.

Type of Review: Revision of a currently approved collection.

Respondents: Business or other for-profit entities.

Number of Respondents: 1,950 respondents (multiple responses).

Estimated Hour per Response: 6 hours per quarter.

Frequency of Response: Recordkeeping; quarterly reporting requirement.

Total Annual Burden: 46,800 hours.

Total Annual Cost: $1,560,000.

Privacy Impact Assessment: No impact(s).

Needs and Uses: On May 1, 2001, the FCC released a *Memorandum Opinion and Order on Reconsideration*, MM Docket No. 00–10, FCC 01–123, which explicitly made applicable to Class A licensees the children's programming and reporting requirements governing commercial television broadcasters, including the filing of the quarterly FCC Form 398. Nothing in either the Class A *Report and Order* or the *Order on Reconsideration* modified FCC Form 398 itself. FCC Form 398 is used to identify the individual station and children's educational and informational programs, which the station broadcasts on both the regularly scheduled and preempted core programming, to meet the station's obligation under the Children's Television Act of 1990. This standardized form provides a consistent format for reporting by all licensees, which facilitates efforts by the public and the FCC to monitor compliance with the Children's Television Act.

Federal Communications Commission.

William F. Caton,

Deputy Secretary.

[FR Doc. 04–17243 Filed 7–28–04; 8:45 am]

BILLING CODE 6712–01–P

FEDERAL COMMUNICATIONS COMMISSION

Notice of Public Information Collection(s) Being Reviewed by the Federal Communications Commission, Comments Requested

July 22, 2004.

SUMMARY: The Federal Communications Commission, as part of its continuing effort to reduce paperwork burden invites the general public and other Federal agencies to take this opportunity to comment on the following information collection(s), as required by the Paperwork Reduction Act (PRA) of 1995, Public Law 104–13. An agency may not conduct or sponsor a collection of information unless it displays a currently valid control number. No person shall be subject to any penalty for failing to comply with a collection of information subject to the Paperwork Reduction Act that does not display a valid control number. Comments are requested concerning (a) whether the proposed collection of information is necessary for the proper performance of the functions of the Commission, including whether the information shall have practical utility; (b) the accuracy of the Commission's burden estimate; (c) ways to enhance the quality, utility, and clarity of the information collected; and (d) ways to minimize the burden of the collection of information on the respondents, including the use of automated collection techniques or other forms of information technology.

DATES: Written Paperwork Reduction Act (PRA) comments should be submitted on or before September 27, 2004. If you anticipate that you will be submitting comments, but find it difficult to do so within the period of time allowed by this notice, you should advise the contact listed below as soon as possible.

ADDRESSES: Direct all Paperwork Reduction Act (PRA) comments to Les Smith, Federal Communications Commission, Room 1-A804, 445 12th Street, SW., Washington, DC 20554 or via the Internet to *Leslie.Smith@fcc.gov.*

FOR FURTHER INFORMATION CONTACT: For additional information or copies of the information collection(s), contact Les Smith at (202) 418–0217 or via the Internet at *Leslie.Smith@fcc.gov*.

SUPPLEMENTARY INFORMATION:

OMB Control Number: 3060–0844.

Title: Carriage of the Transmission of Digital Television Broadcast Stations, R&O, and FNPRM.

Form Number: N/A.

Type of Review: Extension of a currently approved collection.

Respondents: Business or other for-profit entities.

Number of Respondents: 12,700 respondents (multiple responses).

Estimated Time per Response: 30 minutes–40 hours.

Frequency of Response: On occasion reporting requirement; third party disclosure.

Total Annual Burden: 93,221 hours.

Total Annual Cost: $2,414,894.

Privacy Impact Assessment: No impact(s).

Needs and Uses: The FCC adopted a Report and Order (R&O) on January 23, 2001, and Further Notice of Proposed Rulemaking (FNPRM). The R&O modified 47 CFR 76.64(f) to provide that stations that return their analog spectrum and broadcast only in digital format are entitled to elect must-carry or retransmission consent status following the procedures previously applicable to new television stations. The R&O also provided only carriage rights for a very limited number of digital-only television broadcast stations (DTV) and may result in voluntary carriage for a subset of other DTV stations. Furthermore, the R&O established a framework for voluntary retransmission consent agreements between DTV station licensees and multi-channel video programming distributors and modified several sections of the rules accordingly. The FNPRM sought additional comments on carriage requirements relating to digital television stations generally, as proposed in the initial NPRM.

Federal Communications Commission.

William F. Caton,

Deputy Secretary.

[FR Doc. 04–17245 Filed 7–28–04; 8:45 am]

BILLING CODE 6712–01–P

FEDERAL COMMUNICATIONS COMMISSION

Notice of Public Information Collection(s) Being Reviewed by the Federal Communications Commission, Comments Requested

July 20, 2004.

SUMMARY: The Federal Communications Commission, as part of its continuing effort to reduce paperwork burden invites the general public and other Federal agencies to take this opportunity to comment on the following information collection(s), as required by the Paperwork Reduction Act (PRA) of 1995, Public Law No. 104–13. An agency may not conduct or sponsor a collection of information unless it displays a currently valid control number. No person shall be

subject to any penalty for failing to comply with a collection of information subject to the Paperwork Reduction Act that does not display a valid control number. Comments are requested concerning (a) whether the proposed collection of information is necessary for the proper performance of the functions of the Commission, including whether the information shall have practical utility; (b) the accuracy of the Commission's burden estimate; (c) ways to enhance the quality, utility, and clarity of the information collected; and (d) ways to minimize the burden of the collection of information on the respondents, including the use of automated collection techniques or other forms of information technology.

DATES: Written Paperwork Reduction Act (PRA) comments should be submitted on or before September 27, 2004. If you anticipate that you will be submitting comments, but find it difficult to do so within the period of time allowed by this notice, you should advise the contact listed below as soon as possible.

ADDRESSES: Direct all Paperwork Reduction Act (PRA) comments to Les Smith, Federal Communications Commission, Room 1–A804, 445 12th Street, SW., Washington, DC 20554 or via the Internet to *Leslie.Smith@fcc.gov.*

FOR FURTHER INFORMATION CONTACT: For additional information or copies of the information collection(s), contact Les Smith at (202) 418–0217 or via the Internet at *Leslie.Smith@fcc.gov.*

SUPPLEMENTARY INFORMATION:

OMB Control Number: 3060–0833.

Title: Implementation of Section 255 of the Telecommunications Act of 1996: Complaint Filings/Designation of Agents.

Form Number: N/A.

Type of Review: Extension of a currently approved collection.

Respondents: Individuals or household; Business or other for-profit entities; Not-for-profit institutions, Federal government; and State, local or tribal government.

Number of Respondents: 8,677 respondents (multiple responses).

Estimated Time per Response: 0.50–5 hours.

Frequency of Response: Recordkeeping; On occasion and one time reporting requirements; Third party disclosure requirement.

Total Annual Burden: 12,338 hours.

Total Annual Cost: $720,000.

Privacy Impact Assessment: Yes.

Needs and Uses: This information collection includes rules governing the filing of complaints as part of the implementation of Section 255 of the Telecommunications Act of 1996, which seeks to ensure that telecommunications equipment and services are available to all Americans, including those individuals with disabilities. In particular, telecommunications service providers and equipment manufacturers are asked for a one-time designation of an agent who will receive and promptly handle voluntary consumer complaints of accessibility concerns. As with any complaint procedure, a certain number of regulatory and information burdens are necessary to ensure compliance with FCC rules.

OMB Control Number: 3060–0874.

Title: Consumer Complaint Form, FCC Form 475.

Form Number: FCC Form 475.

Type of Review: Extension of a currently approved collection

Respondents: Individuals or household; business or other for-profit entities; not-for-profit institutions; Federal government; and state, local or tribal government.

Number of Respondents: 58,772.

Estimated Time per Response: 0.50 hours.

Frequency of Response: On occasion reporting requirement; Third party disclosure.

Total Annual Burden: 29,386 hours.

Total Annual Cost: None.

Privacy Impact Assessment: Yes.

Needs and Uses: FCC Form 475 allows the Commission to collect detailed data from consumers of the practices of common carriers. This information contained in the collection will allow consumers to provide the Commission with the relevant information required to help consumers develop a concise statement outlining the issue in dispute. The Commission uses the information to assist in resolving informal complaints and to collect data required to assess the practices of common carriers.

Federal Communications Commission.

William F. Caton,

Deputy Secretary.

[FR Doc. 04–17248 Filed 7–28–04; 8:45 am]

BILLING CODE 6712–01–P

FEDERAL COMMUNICATIONS COMMISSION

Notice of Public Information Collection(s) Being Reviewed by the Federal Communications Commission, Comments Requested

July 20, 2004.

SUMMARY: The Federal Communications Commission, as part of its continuing effort to reduce paperwork burden invites the general public and other Federal agencies to take this opportunity to comment on the following information collection(s), as required by the Paperwork Reduction Act (PRA) of 1995, Public Law 104–13. An agency may not conduct or sponsor a collection of information unless it displays a currently valid control number. No person shall be subject to any penalty for failing to comply with a collection of information subject to the Paperwork Reduction Act that does not display a valid control number. Comments are requested concerning (a) whether the proposed collection of information is necessary for the proper performance of the functions of the Commission, including whether the information shall have practical utility; (b) the accuracy of the Commission's burden estimate; (c) ways to enhance the quality, utility, and clarity of the information collected; and (d) ways to minimize the burden of the collection of information on the respondents, including the use of automated collection techniques or other forms of information technology.

DATES: Written Paperwork Reduction Act (PRA) comments should be submitted on or before September 27, 2004. If you anticipate that you will be submitting comments, but find it difficult to do so within the period of time allowed by this notice, you should advise the contact listed below as soon as possible.

ADDRESSES: Direct all Paperwork Reduction Act (PRA) comments to Les Smith, Federal Communications Commission, Room 1–A804, 445 12th Street, SW., Washington, DC 20554 or via the Internet to *Leslie.Smith@fcc.gov.*

FOR FURTHER INFORMATION CONTACT: For additional information or copies of the information collection(s), contact Les Smith at (202) 418–0217 or via the Internet at *Leslie.Smith@fcc.gov.*

SUPPLEMENTARY INFORMATION:

OMB Control Number: 3060–0211.

Title: Section 73.1943, Political File.

Form Number: N/A.

Type of Review: Extension of a currently approved collection.

Respondents: Business or other for-profit entities.

Number of Respondents: 16,759.

Estimated Time per Response: 0.25 hours (multiple broadcasts annually).

Frequency of Response: Recordkeeping; On occasion reporting requirement.

Total Annual Burden: 104,744 hours.

Total Annual Cost: None.

Privacy Impact Assessment: No impact(s).

Needs and Uses: 47 CFR 73.1943 requires licensees of broadcast stations

to keep and permit public inspection of a complete record (political file) of all requests for broadcast time made by or on behalf of candidates for public office, together with an appropriate notation showing the disposition made by the licensee of such requests and the charges made, if any, if the request is granted. The disposition includes the schedule of time purchased, when the spots actually aired, the rates charged, and the classes of time purchased. Also, when free time is provided for use by or on behalf of candidates, a record of the free time provided is to be placed in the political file. The public uses the data to assess the money expended and time allotted to a political candidate and to ensure that equal access is afforded to other qualified candidates.

OMB Control Number: 3060–0501.

Title: Section 76.206, Candidate Rates; Section 76.1611, Political Cable Rates and Classes of Time.

Form Number: N/A.

Type of Review: Revision of currently approved collection.

Respondents: Business or other for-profit entities.

Number of Respondents: 5,375.

Estimated Hours per Response: 0.5 to 10 hours.

Frequency of Response: One time reporting requirement; third party disclosure.

Total Annual Burden: 139,750 hours.

Total Annual Cost: None.

Privacy Impact Assessment: No impact(s).

Needs and Uses: Section 315 of the Communications Act directs cable operators to charge political candidates the ''lowest unit charge of the station'' for the same class and amount of time for the same period, during the 45 days preceding a primary or runoff election and the 60 days preceding a general or special election.

47 CFR 76.206 and 76.1611 require cable system operators to disclose and make available to candidates all discount privileges available to commercial advertisers. In addition, Sections 76.206 and 76.1611 require cable systems to disclose any station practices offered to commercial advertisers that enhance the value of advertising spots and different classes of time: immediately preemptible, preemptible with notice, fixed, fire sale, and make good. Section 76.206 also requires cable systems to calculate the lowest unit charge. Furthermore, cable systems are required to review their advertising records throughout the election period to determine whether compliance with this section requires that candidates receive rebates or credits.

The disclosures assure candidates that they are receiving the same lowest unit charge as other commercial advertisers.

OMB Control Number: 3060–0502.

Title: Section 73.1942, Candidate Rates.

Form Number: N/A.

Type of Review: Extension of currently approved collection.

Respondents: Business or other for-profit entities.

Number of Respondents: 12,977.

Estimated Hours per Response: 0.5 to 20 hours.

Frequency of Response: Recordkeeping; On occasion reporting requirement; Third party disclosure.

Total Annual Burden: 733,201 hours.

Total Annual Cost: None.

Privacy Impact Assessment: No impact(s).

Needs and Uses: Section 315(b) of the Communications Act directs broadcast stations to charge political candidates the ''lowest unit charge of the station'' for the same class and amount of time for the same period, during the 45 days preceding a primary or runoff election and the 60 days preceding a general or special election.

47 CFR 73.1942 requires broadcast licensees to disclose and make available to candidates all discount privileges available to commercial advertisers. In addition, Section 73.1942 requires broadcast licensees to disclose any station practices offered to commercial advertisers that enhance the value of advertising spots and different classes of time (immediately preemptible, preemptible with notice, fixed, fire sale, and make good). Section 73.1942 also requires licensees to calculate the lowest unit charge. Stations are also required to review their advertising records throughout the election period to determine whether compliance with this section requires that candidates receive rebates or credits.

The disclosures assure candidates that they are receiving the same lowest unit charge as other commercial advertisers.

Federal Communications Commission.

William F. Caton,

Deputy Secretary.

[FR Doc. 04–17249 Filed 7–28–04; 8:45 am]

BILLING CODE 6712–01–P

DEPARTMENT OF HEALTH AND HUMAN SERVICES

Office of the Secretary

[Document Identifier: OS–0990–0128]

Agency Information Collection Activities: Proposed Collection; Comment Request

AGENCY: Office of the Secretary, HHS.

In compliance with the requirement of section 3506(c)(2)(A) of the Paperwork Reduction Act of 1995, the Office of the Secretary (OS), Department of Health and Human Services, is publishing the following summary of proposed collections for public comment. Interested persons are invited to send comments regarding this burden estimate or any other aspect of this collection of information, including any of the following subjects: (1) The necessity and utility of the proposed information collection for the proper performance of the agency's functions; (2) the accuracy of the estimated burden; (3) ways to enhance the quality, utility, and clarity of the information to be collected; and (4) the use of automated collection techniques or other forms of information technology to minimize the information collection burden.

#1 Type of Information Collection Request: Revision of Currently Approved Collection;

Title of Information Collection: HHS Acquisition Regulations: HHSAR 352.270–9 and Section 353.223–70;

Form/OMB No.: OS–0990–0128;

Use: This clearance request addresses reporting and recordkeeping requirements for acquisitions involving care of laboratory animals (HHSAR Section 352.270–9) and safety and health (HHSAR Section 352.223–70);

Frequency: Reporting and on occasion;

Affected Public: State, local, or tribal governments, business or other for profit, not for profit institutions;

Annual Number of Respondents: 122;

Total Annual Responses: 122;

Average Burden Per Response: 18 hours;

Total Annual Hours: 1,102.

To obtain copies of the supporting statement and any related forms for the proposed paperwork collections referenced above, access the HHS Web site address at *http://www.hhs.gov/oirm/infocollect/pending/* or e-mail your request, including your address, phone number, OMB number, and OS document identifier, to *naomi.cook@hhs.gov,* or call the Reports Clearance Office on (202) 690–6162. Written comments and

recommendations for the proposed information collections must be mailed within 60 days of this notice directly to the OMB Desk Officer at the address below: OMB Desk Officer: John Kraemer, OMB Human Resources and Housing Branch, Attention: (OMB #0990–0128), New Executive Office Building, Room 10235, Washington, DC 20201.

Dated: July 20, 2004.

Robert E. Polson,

Office of the Secretary, Paperwork Reduction Act Reports Clearance Officer.

[FR Doc. 04–17229 Filed 7–28–04; 8:45 am]

BILLING CODE 4168–17–P

DEPARTMENT OF HEALTH AND HUMAN SERVICES

National Committee on Vital and Health Statistics: Meeting

Pursuant to the Federal Advisory Committee Act, the Department of Health and Human Services (HHS) announces the following advisory committee meeting.

Name: National Committee on Vital and Health Statistics (NCVHS) Executive Subcommittee.

Time and Date: August 6, 2004 8 a.m.–4:30 p.m.

Place: Robert Wood Johnson Foundation, The Board Room, Route 1 and College Road East, Princeton, NJ 08643.

Status: Open.

Purpose: The NCVHS Executive Subcommittee will hold an all-day meeting to review the past year's accomplishments and conduct strategic planning for the coming year.

Contact Person for More Information: Substantive program information as well as summaries of meetings and a roster of committee members may be obtained from Marjorie S. Greenberg, Executive Secretary, NCVHS, National Center for Health Statistics, Centers for Disease Control and Prevention, 3311 Toledo Road, Room 2402, Hyattsville, Maryland 20782, telephone (301) 458–4245. Information also is available on the NCVHS home page of the HHS Web site: *http://www.ncvhs.hhs.gov/,* where further information including an agenda will be posted when available.

Should you require reasonable accommodation, please contact the CDC Office of Equal Employment Opportunity on (301) 458–4EEO (4336) as soon as possible.

Dated: July 16, 2004.

James Scanlon,

Acting Deputy Assistant Secretary for Science and Data Policy, Office of the Assistant Secretary for Planning and Evaluation.

[FR Doc. 04–17328 Filed 7–28–04; 8:45 am]

BILLING CODE 4151–05–M

DEPARTMENT OF HEALTH AND HUMAN SERVICES

National Committee on Vital and Health Statistics: Meeting

Pursuant to the Federal Advisory Committee Act, the Department of Health and Human Services (HHS) announces the following advisory committee meetings.

Name: National Committee on Vital and Health Statistics (NCVHS), Subcommittee on Standards and Security (SSS)

Times and Dates:

Meeting One: July 28, 2004 9 a.m.–6 p.m.; July 29, 2004 8:30 a.m.–6 p.m.; July 30, 2004 8:30 a.m.–12:30 p.m.

Meeting Two: August 17, 2004, 9 a.m.–5 p.m.; August 18, 2004 8:30 a.m.–5 p.m.; August 19, 2004 8:30 a.m.–12:30 p.m.

Place: Hubert H. Humphrey Building, 200 Independence Avenue, SW., Room 705A, Washington, DC 20201.

Status: Open.

Purpose: At the July 28–30 meeting, the Subcommittee will hold hearings related to NCVHS' requirements under the Medicare Modernization Act of 2004 to develop recommendations on standards for e-prescribing for the HHS Secretary. The hearings on the first two days will conclude testimonies from stakeholders including pharmacy benefit management organizations, pharmaceutical manufacturers, payers, and hospitals. On the third day the Subcommittee will begin working on identifying potential initial stnadards, gaps, and related issues.

At the August 17–19 meeting, the Subcommittee will present its findings from the July hearings to standards development organizations, terminilogy developers, and others, for reaction and then draft a preliminary recommendation letter for possible presentation to the Full NCVHS in September.

Contact Person for More Information: Substantive program information as well as summaries of meetings and a roster of Committee members may be obtained from Maria Friedman, Health Insurance Specialist, Security and Standards Group, Centers for Medicare and Medicaid Services, MS: C5–24–04, 7500 Security Boulevard, Baltimore, MD 21244–1850, telephone: 410–786–6333 or Marjorie S. Greenberg, Executive Secretary, NCVHS, National Center for Health Statistics, Centers for Disease Control and Prevention, Room 1100, Presidential Building, 3311 Toledo Road, Hyattsville, Maryland 20782, telephone: (301) 458–4245. Informaiton also is available on the NCVHS home page of the HHS Web site: *http://www.ncvhs.hhs.gov/* where an agenda for the meeting will be posted when available.

Should you require reasonable accommodation, please contact the CDC Office of Equal Employment Opportunity on (301) 458–4EEO (4336) as soon as possible.

Dated: July 21, 2004.

James Scanlon,

Acting Deputy Assistant Secretary for Science and Data Policy, Office of the Assistant Secretary for Planning and Evaluation.

[FR Doc. 04–17329 Filed 7–28–04; 8:45 am]

BILLING CODE 4151–05–M

DEPARTMENT OF HEALTH AND HUMAN SERVICES

Centers for Disease Control and Prevention

[Program Announcement 04253]

Strengthening the Capacity of the Government of Rwanda's Treatment and Research for AIDS Center (TRAC) for HIV Surveillance and the Planning, Implementation, Monitoring and Evaluation of HIV/AIDS Clinical Prevention, Treatment and Care Programs; Notice of Intent to Fund Single Eligibility Award

A. Purpose

The Centers for Disease Control and Prevention (CDC) announces the intent to fund fiscal year (FY) 2004 funds for a cooperative agreement program with the Government of Rwanda's Treatment and Research AIDS Center (TRAC) to improve national surveillance capacity and the planning, implementation and evaluation of HIV/AIDS prevention, care and treatment programs, including antiretroviral therapy (ART) to eligible persons living with HIV/AIDS (PLWHA). The Catalog of Federal Domestic Assistance number for this program is 93.941.

B. Eligible Applicant

Assistance will be provided only to the Rwandan government entity Treatment and Research AIDS Center (TRAC).

TRAC is the only appropriate and qualified organization to fulfill the requirements set forth in this announcement because of its unique mandate and demonstrated capacity to successfully coordinate national HIV/AIDS programs. The Minister of State for AIDS and other major epidemics works with TRAC to coordinate the Ministry of Health (MOH) response to HIV/AIDS. Rwanda's TRAC was established in 2001 with a mandate to coordinate all national HIV/AIDS clinical prevention, care and treatment programs; priority was placed on improving the care and treatment of PLWHA, expanding VCT services, PMTCT of HIV, care and treatment for STDs, and epidemiologic surveillance of HIV/AIDS. TRAC is the only Rwandan

government institution with this mandate.

TRAC also has the ability to financially and technically oversee the project. TRAC's current structure consists of a PMTCT/VCT unit, a surveillance unit, a STI/HIV care and treatment unit, and an informatics unit. The performance of these units directly impacts national-level decisions for the coordination of services related to HIV/AIDS and other major epidemics.

CDC has successfully worked in partnership with TRAC in the past. In fiscal year 2003, CDC/GAP's substantial financial, technical and logistical support resulted in the development of surveillance capacity at TRAC, culminating in the national dissemination of the first HIV sentinel surveillance results since 1998.

TRAC's unique mandate within the Government of Rwanda, its ability to technically and financially oversee this program, and its history of working successfully with CDC are the basis for TRAC being the only entity eligible for this program announcement.

C. Funding

Approximately $500,000 is available in FY 2004 to fund this award. It is expected that the award will begin on or before September 1, 2004, and will be made for a 12-month budget period within a project period of up to 1 year. Funding estimates may change.

D. Where To Obtain Additional Information

For general comments or questions about this announcement, contact: Technical Information Management, CDC Procurement and Grants Office, 2920 Brandywine Road, Atlanta, GA 30341–4146, Telephone: 770–488–2700.

For technical questions about this program, contact: Valerie Koscelnik, Project Officer, U.S. Embassy, 377 Boulevard de la Revolution, B.P. 28, Kigali, Rwanda, Telephone: 250–57–54–73, E-mail: *KoscelnikVX@state.gov.*

Dated: July 22, 2004.

William P. Nichols,

Acting Director, Procurement and Grants Office, Centers for Disease Control and Prevention.

[FR Doc. 04–17215 Filed 7–28–04; 8:45 am]

BILLING CODE 4163–18–P

DEPARTMENT OF HEALTH AND HUMAN SERVICES

Centers for Disease Control and Prevention

HIV/AIDS Surveillance in VCT/PMTCT Centers in Haiti Including Support of Annual Sero-Survey of Pregnant Women

Announcement Type: New.
Funding Opportunity Number: 04274.
Catalog of Federal Domestic Assistance Number: 93.941.
Key Dates:
Application Deadline: August 30, 2004.

I. Funding Opportunity Description

Authority: This program is authorized under Sections 307 and 317(k)(2) of the Public Health Service Act, [42 U.S.C. Sections 242l and 247b(k)(2)], as amended.

Purpose: The Centers for Disease Control and Prevention (CDC) announces the availability of fiscal year (FY) 2004 funds for a cooperative agreement to: (1) Reinforce the capacity of Ministry of Health (MOH) staff to participate in and conduct population-based surveys; and (2) to establish a definitive United States Government (USG) program health information system (HIS) to monitor existing Voluntary Counseling and Testing/Prevention of Mother to Child Transmission (VCT/PMTCT) programs and clinical care, and continue generating monthly facility-based reports.

The purpose of this cooperative agreement is to provide a funding mechanism to provide support to a public or private non-profit organization, based in Haiti, that has proven capacity to provide the technical assistance needed to lead these two surveillance-based initiatives.

The USG seeks to reduce the impact of HIV/AIDS in specific countries in sub-Saharan Africa and the Caribbean through a 15 billion dollar U.S. presidential initiative known as the President's Emergency Plan for AIDS Relief (PEPFAR). The Global AIDS Program (GAP) of the U.S., CDC, Department of Health and Human Services (HHS), is a lead partner in this initiative.

The PEPFAR encompasses HIV/AIDS activities in more than 75 countries and focuses on 14 countries in Africa and the Caribbean to develop comprehensive and integrated prevention, care and treatment programs. Within five years, the 14 countries will: Treat more than two million HIV-infected persons with effective combination anti-retroviral therapy; will care for ten million HIV-infected persons and those orphaned by HIV/AIDS; and prevent seven million new infections.

Targeted countries are among those with the most severe epidemics and the highest number of new infections. They also represent countries where the potential for impact is greatest and where USG agencies are already active. Haiti is one of these targeted countries.

Measurable outcomes of this program will be in alignment with the following performance goal for the PEPFAR to prevent seven million new HIV infections. The initiative will support critical prevention efforts by supporting VCT and PMTCT sites, enabling them to continue to perform.

This initiative is a coordinated effort led by the Office of the Global AIDS Coordinator at the Department of State, and involves various U.S. Federal Government agencies, including, the Department of State, HHS, the Department of Defense, and the U.S. Agency for International Development (USAID).

Activities: Awardee activities for this program are as follows:

1. Reinforce capacity of MOH staff to participate in and conduct population-based surveys.

a. Train 50 MOH personnel in the technical aspects of conducting an Antinatal Clinic (ANC) sero-survey through planning and execution of the fifth annual sero-survey, to include, but not limited to: identification of sites; training of data collection teams and site managers; provision of commodities and equipment; elaboration of Standard Operating Procedures (SOPs) for sample collection; subcontracting for sample processing; transportation of samples to a central lab; setting up data entry screens; and analysis of survey data.

b. Provide operational support to the ANC sero-survey sites that are not a part of the official VCT/PMTCT site network to enable them to continue to perform.

c. Initiate procurement actions for the fifth ANC sero-survey (projected start date: May 2005).

2. Establish a definitive USG program HIS to monitor existing VCT/PMTCT programs and clinical care, and continue generating monthly facility-based reports.

a. Integrate PEPFAR indicators into existing surveillance; and modify procedures manuals, data collection tools and reports.

b. Provide additional computer equipment for 15 institutions (excluding Centers of Excellence covered by University of Technical Assistant Project [UTAP]).

c. Support FY 2004 salaries for ten HIS staff hired earlier this year, and support salaries through March 2005.

d. Train field and MOH personnel, supervise data collection and prepare reports in collaboration with MOH staff.

e. Establish a national HIV/AIDS case notification system.

f. Provide technical and secretarial support to the National Technical Committee on Monitoring and Evaluation (M&E).

In a cooperative agreement, CDC staff is substantially involved in the program activities, above and beyond routine grant monitoring.

CDC Activities for this program are as follows:

1. CDC will provide technical assistance in designing and building local area networks, setup of databases and other information technology projects. CDC will also provide installation and setup of computer equipment to assist in achieving project goals, subject to agreement by CDC and the recipient.

2. CDC will assist in developing and implementing data and information dissemination plans for HIV, AIDS, tuberculosis (TB), and sexually transmitted infections (STI) data and results.

3. CDC Haiti will provide technical support to recipient for planning and implementing surveillance activities through their M&E specialist, database manager and information specialist, and through Atlanta-based staff, as indicated.

4. CDC will provide training and commodities, as indicated, for the annual sero-survey of pregnant women.

II. Award Information

Type of Award: Cooperative Agreement. CDC involvement in this program is listed in the Activities Section above.

Fiscal Year Funds: 2004.

Approximate Total Funding: $550,000.

Approximate Number of Awards: One.

Approximate Average Award: $110,000 (This amount is for the first 12-month budget period, and includes direct costs.).

Floor of Award Range: $550,000.

Ceiling of Award Range: $550,000.

Anticipated Award Date: September 1, 2004.

Budget Period Length: 12 months.

Project Period Length: Five years.

Throughout the project period, CDC's commitment to continuation of awards will be conditioned on the availability of funds, evidence of satisfactory progress by the recipient (as documented in required reports), and the determination that continued funding is in the best interest of the Federal Government.

III. Eligibility Information

III.1. Eligible Applicants

Applications may be submitted by public and private non-profit and faith-based organizations based in Haiti. Applicants should have a history of activity in ANC sero-surveillance in Haiti, and in HIS development.

Other Eligibility Requirements: Applicants should have an established relationship with the MOH in Haiti.

III.2. Cost Sharing or Matching

Matching funds are not required for this program.

III.3. Other

If you request a funding amount greater than the ceiling of the award range, your application will be considered non-responsive, and will not be entered into the review process. You will be notified that your application did not meet the submission requirements.

If your application is incomplete or non-responsive to the requirements listed in this section, it will not be entered into the review process. You will be notified that your application did not meet submission requirements.

Note: Title 2 of the United States Code Section 1611 states that an organization described in Section 501(c)(4) of the Internal Revenue Code that engages in lobbying activities is not eligible to receive Federal funds constituting an award, grant, or loan.

IV. Application and Submission Information

IV.1. Address To Request Application Package

To apply for this funding opportunity use application form PHS 5161. Application forms and instructions are available on the CDC Web site, at the following Internet address: *www.cdc.gov/od/pgo/forminfo.htm.*

If you do not have access to the Internet, or if you have difficulty accessing the forms on-line, you may contact the CDC Procurement and Grants Office Technical Information Management Section (PGO-TIM) staff at: 770–488–2700. Application forms can be mailed to you.

IV.2. Content and Form of Submission

Application: You must submit a project narrative with your application forms. The narrative must be submitted in the following format:

- Maximum number of pages: 40. If your narrative exceeds the page limit, only the first pages, which are within the page limit, will be reviewed.
- Font size: 12 point unreduced
- Double spaced
- Paper size: 8.5 by 11 inches
- Page margin size: One inch
- Printed only on one side of page
- Held together only by rubber bands or metal clips; not bound in any other way.

Your narrative should address activities to be conducted over the entire project period, and must include the following items in the order listed:

1. Organizational Experience

Provide evidence that your organization has experience in, and is currently maintaining, HIV/AIDS surveillance activity in Haiti.

2. Goals and Objectives

a. Provide goals, objectives, and a timeline for implementation of the program plan.

b. Provide measures of effectiveness by which you can assess the success of the program.

3. Plan of Action

Describe how your organization will meet stated requirements.

4. Management Plan, Staffing, and Infrastructure

a. Management Plan—Provide an organizational chart and describe the responsibilities for each of the key staff.

b. Staffing—Describe the number and types of staff needed to assist with technical guidance and training activities.

c. Infrastructure—Describe the physical facilities in which the proposed activities will be carried out and the equipment needed.

d. Human Resources, Management and Administration—Describe plans to provide or obtain all material and human resources necessary for the development, implementation, management, operation, procurement, monitoring, and quality assurance of all program activities.

e. Coordination with National Programs—Describe the organization's strategy to coordinate proposed activities within the context of national programs.

f. Exit Strategy and Capacity Building within the MOH—Elaborate an exit strategy that encompasses transfer of all necessary knowledge and skills to the MOH of Haiti.

5. Budget—(not included in the narrative page limit)

Guidance for completing your budget can be found on the CDC Web site, at the following address: *http://www.cdc.gov/od/pgo/funding/budgetguide.htm.*

Additional information may be included in the application appendices. The appendices will not be counted toward the narrative page limit. This additional information includes:

- Curriculum Vitae
- Resumes
- Organizational Charts

You are required to have a Dun and Bradstreet Data Universal Numbering System (DUNS) number to apply for a grant or cooperative agreement from the Federal government. The DUNS number is a nine-digit identification number, which uniquely identifies business entities. Obtaining a DUNS number is easy and there is no charge. To obtain a DUNS number, access *www.dunandbradstreet.com* or call 1–866–705–5711.

For more information, see the CDC Web site at: *http://www.cdc.gov/od/pgo/funding/pubcommt.htm.* If your application form does not have a DUNS number field, please write your DUNS number at the top of the first page of your application, and/or include your DUNS number in your application cover letter.

Additional requirements that may require you to submit additional documentation with your application are listed in section ''VI.2. Administrative and National Policy Requirements.''

Private, non-profit organizations are encouraged to submit with their applications the survey located under ''Grant Related Documents and Forms ''titled ''Survey for Private, Non-Profit Grant Applicants'' at *www.acf.hhs.gov/programs/ofs/final_fy04_424_survey.doc.*

IV.3. Submission Dates and Times

Application Deadline Date: August 30, 2004.

Explanation of Deadlines: Applications must be received in the CDC Procurement and Grants Office by 4 p.m. Eastern Time on the deadline date. If you send your application by the United States Postal Service or commercial delivery service, you must ensure that the carrier will be able to guarantee delivery of the application by the closing date and time. If CDC receives your application after closing due to: (1) Carrier error, when the carrier accepted the package with a guarantee for delivery by the closing date and time, or (2) significant weather delays or natural disasters, you will be given the opportunity to submit documentation of the carriers guarantee. If the documentation verifies a carrier problem, CDC will consider the application as having been received by the deadline.

This announcement is the definitive guide on application submission address and deadline. It supersedes information provided in the application instructions. If your application does not meet the deadline above, it will not be eligible for review, and will be discarded. You will be notified that your application did not meet the submission requirements.

CDC will not notify you upon receipt of your application. If you have a question about the receipt of your application, first contact your courier. If you still have a question, contact the PGO–TIM staff at: 770–488–2700. Before calling, please wait two to three days after the application deadline. This will allow time for applications to be processed and logged.

IV.4. Intergovernmental Review of Applications

Executive Order 12372 does not apply to this program.

IV.5. Funding Restrictions

Restrictions, which must be taken into account while writing your budget, are as follows:

- Funds may be used only for activities associated with HIV/AIDS. USG funds may be used for direct costs such as salaries; necessary travel; operating costs, including supplies, fuel for transportation, utilities, etc.; staff training costs, including registration fees and purchase and rental of training-related equipment; renovation of clinical or lab facilities; and purchase of HIV testing reagents, test kits and laboratory equipment for HIV testing. Equipment may be purchased if deemed necessary to accomplish program objectives; however, prior approval by CDC officials must be requested in writing.
- All requests for funds contained in the budget shall be stated in U.S. dollars. Once an award is made, CDC will not compensate foreign grantees for currency exchange fluctuations through the issuance of supplemental awards.
- The costs that are generally allowable in grants to domestic organizations are allowable to foreign institutions and international organizations, with the following exception: With the exception of the American University, Beirut, and the World Health Organization, Indirect Costs will not be paid (either directly or through sub-award) to organizations located outside the territorial limits of the United States or to international organizations regardless of their location.
- The applicant may contract with other organizations under this program; however the applicant must perform a substantial portion of the activities (including program management and operations, and delivery of prevention services for which funds are required).
- You must obtain an annual audit of these CDC funds (program-specific audit) by a U.S.-based audit firm with international branches and current licensure/authority in-country, and in accordance with International Accounting Standards or equivalent standard(s) approved in writing by CDC.
- A fiscal Recipient Capability Assessment may be required, prior to or post award, in order to review the applicant's business management and fiscal capabilities regarding the handling of U.S. Federal funds.
- Prostitution and Related Activities—The U.S. Government is opposed to prostitution and related activities, which are inherently harmful and dehumanizing, and contribute to the phenomenon of trafficking in persons.

Any entity that receives, directly or indirectly, U.S. Government funds in connection with this document (''recipient'') cannot use such U.S. Government funds to promote or advocate the legalization or practice of prostitution or sex trafficking. Nothing in the preceding sentence shall be construed to preclude the provision to individuals of palliative care, treatment, or post-exposure pharmaceutical prophylaxis, and necessary pharmaceuticals and commodities, including test kits, condoms, and, when proven effective, microbicides. A recipient that is otherwise eligible to receive funds in connection with this document to prevent, treat, or monitor HIV/AIDS shall not be required to endorse or utilize a multisectoral approach to combating HIV/AIDS, or to endorse, utilize, or participate in a prevention method or treatment program to which the recipient has a religious or moral objection. Any information provided by recipients about the use of condoms as part of projects or activities that are funded in connection with this document shall be medically accurate and shall include the public health benefits and failure rates of such use.

In addition, any foreign recipient must have a policy explicitly opposing, in its activities outside the United States, prostitution and sex trafficking, except that this requirement shall not apply to the Global Fund to Fight AIDS, Tuberculosis and Malaria, the World Health Organization, the International AIDS Vaccine Initiative or to any United Nations agency, if such entity is a

recipient of U.S. government funds in connection with this document.

The following definitions apply for purposes of this clause:

• Sex trafficking means the recruitment, harboring, transportation, provision, or obtaining of a person for the purpose of a commercial sex act. 22 U.S.C. 7102(9).

• A foreign recipient includes an entity that is not organized under the laws of any State of the United States, the District of Columbia or the Commonwealth of Puerto Rico. *Restoration of the Mexico City Policy,* 66 FR 17303, 17303 (March 28, 2001).

All recipients must insert provisions implementing the applicable parts of this section, ''Prostitution and Related Activities,'' in all subagreements under this award. These provisions must be express terms and conditions of the subagreement, acknowledge that each certification to compliance with this section, ''Prostitution and Related Activities,'' are a prerequisite to receipt of U.S. government funds in connection with this document, and must acknowledge that any violation of the provisions shall be grounds for unilateral termination of the agreement prior to the end of its term. In addition, all recipients must ensure, through contract, certification, audit, and/or any other necessary means, all the applicable requirements in this section, ''Prostitution and Related Activities,'' are met by any other entities receiving U.S. government funds from the recipient in connection with this document, including without limitation, the recipients' sub-grantees, sub-contractors, parents, subsidiaries, and affiliates. Recipients must agree that HHS may, at any reasonable time, inspect the documents and materials maintained or prepared by the recipient in the usual course of its operations that relate to the organization's compliance with this section, ''Prostitution and Related Activities.''

All primary grantees receiving U.S. Government funds in connection with this document must certify compliance prior to actual receipt of such funds in a written statement referencing this document (*e.g.*, ''[Recipient's name] certifies compliance with the section, 'Prostitution and Related Activities.' '') addressed to the agency's grants officer. Such certifications are prerequisites to the payment of any U.S. Government funds in connection with this document.

Recipients' compliance with this section, ''Prostitution and Related Activities,'' is an express term and condition of receiving U.S. government funds in connection with this document, and any violation of it shall be grounds for unilateral termination by HHS of the agreement with HHS in connection with this document prior to the end of its term. The recipient shall refund to HHS the entire amount furnished in connection with this document in the event it is determined by HHS that the recipient has not complied with this section, ''Prostitution and Related Activities.''

Guidance for completing your budget can be found on the CDC Web site, at the following Internet address: *http://www.cdc.gov/od/pgo/funding/budgetguide.htm.*

IV.6. Other Submission Requirements

Application Submission Address: Submit the original and two hard copies of your application by mail or express delivery service to: Technical Information Management-PA# 04274, CDC Procurement and Grants Office, 2920 Brandywine Road, Atlanta, GA 30341.

Applications may not be submitted electronically at this time.

V. Application Review Information

V.1. Criteria

You are required to provide measures of effectiveness that will demonstrate the accomplishment of the various identified objectives of the cooperative agreement. Measures of effectiveness must relate to the performance goals stated in the ''Purpose'' section of this announcement. Measures must be objective and quantitative, and must measure the intended outcome. These measures of effectiveness must be submitted with the application and will be an element of evaluation.

Your application will be evaluated against the following criteria:

1. Ability to carry out the project (40 points)

Does the applicant have demonstrated capability to carry out the project activities as specified? Are the applicants proposed activities realistic, achievable, time-framed and appropriate? How does the applicant propose to monitor these activities? Applicants should include a description of their organizational structure, and use it to explain how the work will be carried out.

2. Technical and Programmatic Approach (20 points)

Does the applicant's proposal demonstrate understanding of the technical and organizational aspects of conducting HIV surveillance? Do the proposed surveillance activities have the potential to effectively meet objectives? Is the timeline a fair estimate of the time it will take to implement surveillance activities?

3. Personnel (20 points)

Is there an adequate number of personnel available to carry out the technical and organizational aspects of all proposed activities? Do the proposed personnel have the training, availability and experience necessary to carry out activities?

4. Administrative and Accounting Plan (20 points)

Does the plan adequately account for the preparation of reports and the monitoring and auditing of expenditures under this cooperative agreement? Does the application demonstrate the ability to administer and manage the budget? Is the budget itemized and well-justified? Has the applicant demonstrated plans to engage an outside accounting firm to design and manage the financial system to meet CDC and the recipient's accounting requirements?

5. Budget (Reviewed, but not scored)

Is the budget within the funding allotted? Is the budget both reasonable and consistent with stated objectives and planned program activities? Are all major expense categories covered?

V.2. Review and Selection Process

Applications will be reviewed for completeness by the Procurement and Grants Office (PGO) staff, and for responsiveness by NCHSTP. Incomplete applications and applications that are non-responsive to the eligibility criteria will not advance through the review process. Applicants will be notified that their application did not meet submission requirements.

An objective review panel will evaluate complete and responsive applications according to the criteria listed in the ''V.1. Criteria'' section above.

V.3. Anticipated Announcement and Award Dates

September 1, 2004

VI. Award Administration Information

VI.1. Award Notices

Successful applicants will receive a Notice of Grant Award (NGA) from the CDC Procurement and Grants Office. The NGA shall be the only binding, authorizing document between the recipient and CDC. The NGA will be signed by an authorized Grants Management Officer, and mailed to the recipient fiscal officer identified in the application.

Unsuccessful applicants will receive notification of the results of the application review by mail.

VI.2. Administrative and National Policy Requirements

45 CFR Part 74 and Part 92

For more information on the Code of Federal Regulations, *see* the National Archives and Records Administration at the following Internet address: *http://www.access.gpo.gov/nara/cfr/cfr-table-search.html.*

The following additional requirements apply to this project:

- AR–4 HIV/AIDS Confidentiality Provisions
- AR–6 Patient Care
- AR–12 Lobbying Restrictions
- AR–14 Accounting System Requirements

Additional information on these requirements can be found on the CDC web site at the following Internet address: *http://www.cdc.gov/od/pgo/funding/ARs.htm.*

VI.3. Reporting Requirements

You must provide CDC with an original, plus two hard copies of the following reports:

1. Detailed implementation plan within 30 days of notice of award.
2. Interim progress report, no less than 15 days before the end of the budget period. The progress report will serve as your non-competing continuation application, and must contain the following elements:
   a. Current Budget Period Activities Objectives.
   b. Current Budget Period Activities Accomplished.
   c. Current Budget Period Financial Progress.
   d. New Budget Period Program Proposed Activities and Objectives.
   e. Budget.
   f. Additional Requested Information.
   g. Measures of Effectiveness.
3. Financial status report, no more than 90 days after the end of the budget period.
4. Final financial and performance reports, no more than 90 days after the end of the project period.

These reports must be mailed to the Grants Management or Contract Specialist listed in the ''Agency Contacts'' section of this announcement.

VII. Agency Contacts

For general questions about this announcement, contact: Technical Information Management Section, CDC Procurement and Grants Office, 2920 Brandywine Road, Atlanta, GA 30341, Telephone: 770–488–2700.

For program technical assistance, contact: Matt Brown, MPS, Country Director; Global AIDS Program (GAP), Haiti, 17 Boulevard Harry Truman, Port-au-Prince Haiti, Telephone: 509–229–3003, E-mail: *zjc5@cdc.gov.*

For financial, grants management, or budget assistance, contact: Diane Flournoy, Grants Management Specialist, CDC Procurement and Grants Office, 2920 Brandywine Road, Atlanta, GA 30341, Telephone: 770–488–2072, E-mail: *Dmf6@cdc.gov.*

Dated: July 22, 2004.

William P. Nichols,

Acting Director, Procurement and Grants Office, Centers for Disease Control and Prevention.

[FR Doc. 04–17213 Filed 7–28–04; 8:45 am]

BILLING CODE 4163–18–P

DEPARTMENT OF HEALTH AND HUMAN SERVICES

Centers for Disease Control and Prevention

Support for Expanded HIV/AIDS Surveillance, Monitoring and Evaluation, and Information Management Activities in the Central American Region

Announcement Type: New.
Funding Opportunity Number: 04277.
Catalog of Federal Domestic Assistance Number: 93.941.
Key Dates:
Application Deadline: August 30, 2004.

I. Funding Opportunity Description

Authority: This program is authorized under Sections 307 and 317(k)(2) of the Public Health Service Act, [42 U.S.C. Sections 242l and 247b(k)(2)], as amended, and under Public Law 108–25 (United States Leadership Against HIV/AIDS, Tuberculosis and Malaria Act of 2003) [22 U.S.C. sections 7601 *et seq.*].

Purpose: The primary purpose of this funding announcement is to assist in increasing the capacity for, quality and coverage of HIV/AIDS-related Strategic Information activities undertaken at country level by Ministries of Health and their collaborating in-country partners, and to strengthen the coordination and implementation of region-wide activities that offer region-wide impact and economies of scale. This funding announcement targets the provision of support to specific countries within the Central American region (defined as Belize, Guatemala, El Salvador, Honduras, Nicaragua, Costa Rica and Panama). Strategic Information is defined as programs and activities supporting the implementation of first and second generation epidemiological surveillance surveys, systems for monitoring and evaluation of multi-sectoral national responses to HIV/AIDS, and strategic initiatives to improve infrastructure and systems supporting surveillance, care and treatment, laboratory and information management activities.

Programs, activities and services to be supported through this agreement may include but are not limited to:

—Planning, resource, and implementation support of specific surveillance activities for HIV/AIDS and HIV/AIDS-related conditions;
—Training and capacity building of staff from Ministries of Health, other government Ministries, National Global Fund to Fight AIDS, TB and Malaria (GFATM)-related entities, and civil society organizations;
—Regional and/or sub-regional meetings, conferences and travel supporting the exchange of relevant information and best practices; and
—Recruitment and assignment of short and/or long-term staff and consultants to support relevant activities at country level.

This will be accomplished by funding a regional non-governmental organization (NGO) to provide planning, resource and implementation support to Ministries of Health and their collaborating in-country partners. The regional NGO recipient, based on plans of action developed jointly with CDC and national partners, will be responsible for assisting Ministries of Health and their partners to mobilize for the implementation of expanded Strategic Information activities, through the provision of resources, training and logistical assistance. The CDC Global AIDS Program (GAP) Regional Office for Central America, based in Guatemala City, will collaborate closely with the regional NGO recipient in the design and implementation of these supportive activities as important components of CDC/GAP's annual work plan for HIV/AIDS assistance to countries within the Central American region.

These activities will contribute and lead to: (1) Implementation of existing U.S. Government-supported regional strategic plans for expanded epidemiological surveillance of HIV/AIDS and HIV-related conditions; (2) improved networking, conferencing and communications among and between national HIV/AIDS epidemiologists, program managers and laboratorians from countries within the region; (3) improved national capacity to implement national strategic plans for surveillance of HIV/AIDS and HIV-related conditions; (4) improved national capacity to support the design

and implementation of periodic HIV/AIDS surveillance surveys to evaluate behavioral and/or prevalence measures at national, regional, or sub-population levels; (5) improved national systems for HIV/AIDS case reporting, data collection, data management and data analysis, including necessary hardware and software requirements; (6) strengthened national capacities for monitoring and evaluation of the national response to HIV/AIDS, particularly in the context of collecting, managing and analyzing information; and (7) strengthened human capacity at national level for planning, implementation and evaluation of Strategic Information activities.

Measurable outcomes of the program will be in alignment with goals of the CDC National Center for HIV, STD and TB Prevention, Global AIDS Program (GAP) to initiate, expand, or strengthen HIV/AIDS prevention, care and treatment and support activities globally.

Activities: Awardee activities for this program are as follows:

A. Planning, Resource and Implementation Support of Surveillance, M&E and Information Management Activities Targeting HIV/AIDS and HIV-Related Conditions at National Level

1. Provide targeted resources and technical assistance to Ministries of Health and their national partners supporting the implementation of behavioral and/or prevalence surveillance activities at national level.

2. Provide targeted resources and support to Ministries of Health and their national partners for the implementation of strategic planning meetings, reviews, assessments and consultations supporting the expanded surveillance, M&E and information management activities at national level.

3. Provide resources and material support to Ministries of Health to improve infrastructure and systems supporting improved surveillance, care/treatment, laboratory and information management activities.

B. Planning, Resource and Implementation Support of Training and Capacity Building Programs Focused on Strategic Information at National and Regional Levels for Staff From Ministries of Health and Their National Partners

1. Perform needs assessments for training and capacity building associated with Strategic Information activities at national and regional levels; develop annual plans for the provision of relevant trainings offered on a regional basis and for economies of scale, in conjunction with existing conferences, meetings, and trainings, if possible.

2. Oversee logistics, travel and coordination of faculty, materials and requirements for relevant training courses, including translation of materials, as required.

C. Planning, Resource and Implementation Support of Relevant Travel of Key Collaborating Partners and Regional/Sub-Regional Meetings and Conferences Supporting the Exchange of Relevant Information

1. Provide travel support to travelers from key collaborating organizations to relevant regional and international conferences, meetings, consultations and trainings.

2. Oversee development of logistics, agendas, and reports associated with relevant meetings and conferences to be held at regional and sub-regional levels.

D. Resource and Administrative Support for the Recruitment and Assignment of Short and/or Long-Term Staff and Consultants To Support Relevant Activities at Country Level Within Ministries of Health and/or Their National Partners

Oversee the recruitment, selection and assignment of staff and consultants to provide specialized Strategic Information assistance to Ministries of Health and their partners;

E. Financial Management

1. Prepare a work plan that is consistent with the proposed activities in this announcement.

2. Prepare an annual budget for the proposed activities.

3. Prepare financial and progress reports—in English—according to CDC requirements and deadlines.

4. Contract an independent auditor, approved by CDC, to ensure ongoing financial accountability and preparation of periodic audit reports, including a possible pre-audit assessment.

In a Cooperative Agreement, CDC staff is substantially involved in the program activities, above and beyond routine grant monitoring.

CDC activities for this program are as follows:

1. Collaborate with the recipient in designing and supporting activities listed above with regular communications, planning sessions, technical and administrative meetings.

2. Review and approve the recipient's work plans for elaboration of the activities in this agreement.

3. Provide appropriate technical assistance—as agreed upon in the work plan—via persons identified as the CDC technical focal point(s) in the Central American region.

4. Hold periodic technical meetings with the recipient to assess progress and modify work plans, as necessary.

5. Hold annual meeting to review overall progress and elaborate work plans for subsequent year.

6. Collaborate with the recipient in the selection of key personnel to be involved in the activities performed under this agreement.

7. Provide administrative support on financial and reporting requirements, as required.

Technical assistance and training may be provided directly by CDC staff or through organizations that have successfully competed for funding under separate Cooperative Agreements or contracts.

II. Award Information

Type of Award: Cooperative Agreement.

CDC involvement in this program is listed in the Activities Section above.

Fiscal Year Funds: 2004.

Approximate Total Funding: $300,000. Up to $300,000 is available for the first year of an expected three-year project period. Annual amounts for successive years may increase or decrease based on the success of the project and availability of funds.

Approximate Number of Awards: One (1).

Floor of Award Range: $200,000.

Ceiling of Award Range: $300,000.

Anticipated Award Date: September 1, 2004.

Budget Period Length: 12 months.

Project Period Length: Three years.

Throughout the project period, CDC's commitment to continuation of awards will be conditioned on the availability of funds, evidence of satisfactory progress by the recipient (as documented in required reports), and the determination that continued funding is in the best interest of the Federal Government.

III. Eligibility Information

III.1. Eligible Applicants

Applications may be submitted by nongovernmental organizations (NGOs) with full legal registration status in one or more countries within the Central American Region (Belize, Guatemala, Honduras, El Salvador, Nicaragua, Costa Rica and Panama), including faith based organizations that have direct experience in:

(a) Designing, implementing and evaluating HIV/AIDS activities in Central America.

(b) Designing and implementing first and second generation surveillance programs for HIV/AIDS and HIV/AIDS-related conditions, and assessing the strengths and weaknesses of existing surveillance systems.

(c) Designing, implementing and evaluating HIV/AIDS-related training and capacity-building programs.

(d) Designing and implementing programmatic assessments, reviews and consultations in collaboration with national Ministries of Health in the Central American Region, and specific to the areas HIV/AIDS surveillance, M&E, training and information management.

(e) Providing full logistical and organizational support to complex multi-country training programs, meetings and conferences at regional or national levels.

Preference will be given to organizations that:

(1) Maintain a headquarters/central/head office in the Central America region;

(2) Have national offices and full time staff/consultants physically present in all or the majority of the countries of Belize, Guatemala, El Salvador, Nicaragua, Costa Rica, and Panama.

(3) Have demonstrated organizational experience as recipient of grants, Cooperative Agreements or contracts from agencies of the United States (U.S.) Government and a successful history of program implementation in collaboration with agencies of the U.S. Government.

III.2. Cost Sharing or Matching

Matching funds are not required for this program.

III.3. Other

If your application is incomplete or non-responsive to the requirements listed in this section, it will not be entered into the review process. You will be notified that your application did not meet submission requirements.

Note: Title 2 of the United States Code section 1611 states that an organization described in section 501(c)(4) of the Internal Revenue Code that engages in lobbying activities is not eligible to receive Federal funds constituting an award, grant, or loan.

IV. Application and Submission Information

IV.1. Address To Request Application Package

To apply for this funding opportunity use application form PHS 5161. Application forms and instructions are available on the CDC Web site, at the following Internet address: *www.cdc.gov/od/pgo/forminfo.htm.*

If you do not have access to the Internet, or if you have difficulty accessing the forms on-line, you may contact the CDC Procurement and Grants Office Technical Information Management Section (PGO–TIM) staff at: 770–488–2700, or the Public Health Advisor at the regional CDC office in Guatemala City, Guatemala, Mr. Mark Fussell, at (502) 369–0791, extension 515. Application forms can be mailed to you.

IV.2. Content and Form of Submission

Application: You must submit a project narrative with your application forms. The narrative must be submitted in the following format:

- Maximum number of pages: 15—If your narrative exceeds the page limit, only the first pages, which are within the page limit, will be reviewed.
- Pages must be numbered.
- Font size: 12 point unreduced.
- Paper size: 8.5 by 11 inches.
- Page margin size: One inch.
- Printed only on one side of page.
- Held together only by rubber bands or metal clips; not bound in any other way.
- Your application must be submitted in English.

Your narrative should address activities to be conducted over the entire project period, and must include at a minimum, a Plan, Demonstrated understanding of activity, Need for assistance, Objectives, Methods, Indicators/Performance Measures, Staffing to be supported, Timeline, and Budget and line item justification. Additional information may be included in the application appendices. This may include but is not limited to: organizational charts, curriculum vitas, letters of support, etc. The Budget/line item justification and appendices will not be counted toward the narrative page limit (15 pages).

You are required to have a Dun and Bradstreet Data Universal Numbering System (DUNS) number to apply for a grant or cooperative agreement from the Federal government. The DUNS number is a nine-digit identification number, which uniquely identifies business entities. Obtaining a DUNS number is easy and there is no charge. To obtain a DUNS number, access www.dunandbradstreet.com or call 1–866–705–5711.

For more information, see the CDC Web site at: *http://www.cdc.gov/od/pgo/funding/pubcommt.htm.* If your application form does not have a DUNS number field, please write your DUNS number at the top of the first page of your application, and/or include your DUNS number in your application cover letter.

Additional requirements that may require you to submit additional documentation with your application are listed in section ''VI.2. Administrative and National Policy Requirements.''

IV.3. Submission Dates and Times

Application Deadline Date: August 30, 2004.

Explanation of Deadlines: Applications must be received in the CDC Procurement and Grants Office by 4:00 p.m. Eastern Time on the deadline date. If you send your application by the United States Postal Service or commercial delivery service, you must ensure that the carrier will be able to guarantee delivery of the application by the closing date and time. If CDC receives your application after closing due to: (1) Carrier error, when the carrier accepted the package with a guarantee for delivery by the closing date and time, or (2) significant weather delays or natural disasters, you will be given the opportunity to submit documentation of the carriers guarantee. If the documentation verifies a carrier problem, CDC will consider the application as having been received by the deadline.

This announcement is the definitive guide on application submission address and deadline. It supersedes information provided in the application instructions. If your application does not meet the deadline above, it will not be eligible for review, and will be discarded. You will be notified that your application did not meet the submission requirements.

CDC will not notify you upon receipt of your application. If you have a question about the receipt of your application, first contact your courier. If you still have a question, contact the PGO–TIM staff at: 770–488–2700. Before calling, please wait two to three days after the application deadline. This will allow time for applications to be processed and logged.

IV.4. Intergovernmental Review of Applications

Executive Order 12372 does not apply to this program.

IV.5. Funding Restrictions

Restrictions, which must be taken into account while writing your budget, are as follows:

- Funds may be spent for reasonable program purposes, including travel, supplies, and services. Equipment may be purchased if deemed necessary to accomplish program objectives;

however, prior approval by CDC officials must be requested in writing.

• All requests for funds contained in the budget shall be stated in U.S. dollars. Once an award is made, CDC will not compensate foreign grantees for currency exchange fluctuations through the issuance of supplemental awards.

• The costs that are generally allowable in grants to domestic organizations are allowable to foreign institutions and international organizations. With the exception of the American University, Beirut, and the World Health Organization (WHO), Indirect Costs will not be paid (either directly or through sub-award) to organizations located outside the territorial limits of the United States or to international organizations regardless of their location.

• The applicant may contract with other organizations under this program; however, the applicant must perform a substantial portion of the activities (including program management and operations, and delivery of services for which funds are required).

• You must obtain an annual audit of these CDC funds (program-specific audit) by a U.S. based audit firm with international branches and current licensure/authority in-country, and in accordance with International Accounting Standards or equivalent standard(s) approved in writing by CDC.

• A fiscal Recipient Capability Assessment may be required, prior to or post award, in order to review the applicant's business management and fiscal capabilities regarding the handling of U.S. Federal funds.

• Funds received from this announcement will not be used for the purchase of antiretroviral drugs for treatment of established HIV infection (with the exception of nevirapine in Prevention of Mother-to-Child Transmission (PMTCT) cases with prior written approval), occupational exposures, and non-occupational exposures.

• No funds appropriated under this announcement shall be used to carry out any program of distributing sterile needles or syringes for the hypodermic injection of any illegal drug.

• The U.S. Government is opposed to prostitution and related activities, which are inherently harmful and dehumanizing, and contribute to the phenomenon of trafficking in persons.

Any entity that receives, directly or indirectly, U.S. Government funds in connection with this document (''recipient'') cannot use such U.S. Government funds to promote or advocate the legalization or practice of prostitution or sex trafficking. Nothing in the preceding sentence shall be construed to preclude the provision to individuals of palliative care, treatment, or post-exposure pharmaceutical prophylaxis, and necessary pharmaceuticals and commodities, including test kits, condoms, and when proven effective, microbicides. A recipient that is otherwise eligible to receive funds in connection with this document to prevent, treat, or monitor HIV/AIDS shall not be required to endorse or utilize a multisectoral approach to combating HIV/AIDS, or to endorse, utilize or participate in a prevention method or treatment program to which the recipient has a religious or moral objection. Any information provided by recipients about the use of condoms as part of projects or activities that are funded in connection with this document shall be medically accurate and shall include the public health benefits and failure rates of such use.

In addition, any foreign recipient must have a policy explicitly opposing, in its activities outside the United States, prostitution and sex trafficking, except that this requirement shall not apply to the Global Fund to Fight AIDS, Tuberculosis and Malaria, the WHO, the International AIDS Vaccine Initiative or to any United Nations agency, if such entity is a recipient of U.S. Government funds in connection with this document.

The following definitions apply for purposes of this clause:

• Sex trafficking means the recruitment, harboring, transportation, provision, or obtaining of a person for the purpose of a commercial sex act. (22 U.S.C. section 7102(9)).

• A foreign recipient includes an entity that is not organized under the laws of any State of the United States, the District of Columbia or the Commonwealth of Puerto Rico. Restoration of the Mexico City Policy, 66 FR 17303 (March 28, 2001).

All recipients must insert provisions implementing the applicable parts of this section, 'Prostitution and Related Activities,'' in all terms and conditions of the subagreement, acknowledge that each certification to compliance with this section, ''Prostitution and Related Activities,'' are a prerequisite to receipt of U.S. Government funds in connection with this document, and must acknowledge that any violation of the provisions shall be grounds for unilateral termination of the agreement prior to the end of its term. In addition, all recipients must ensure, through contract, certification, audit, and/or any other necessary means, all the applicable requirements of this section, ''Prostitution and Related Activities,'' are met by any other entities receiving U.S. Government funds from the recipient in connection with this document, including without limitation, the recipients' sub-grantees, sub-contractors, parents, subsidiaries, and affiliates.

Recipients must agree that HHS may, at any reasonable time, inspect the documents and materials maintained or prepared by the recipient in the usual course of its operations that relate to the organization's compliance with this section, ''Prostitution and Related Activities.''

All primary grantees receiving U.S. Government funds in connection with this document must certify compliance prior to actual receipt of such funds in a written statement referencing this document (*e.g.*, ''[Recipient's name] certifies compliance with this section, 'Prostitution and Related Activities' '') addressed to the agency's grants officer. Such certifications are prerequisites to the payment of any U.S. Government funds in connection with this document.

Recipient's compliance with this section, ''Prostitution and Related Activities,'' is an express term and condition of receiving U.S. Government funds in connection with this document, and any violation of it shall be grounds for unilateral termination by HHS of the agreement with HHS in connection with this document prior to the end of its term. The recipient shall refund to HHS the entire amount furnished in connection with this document in the event it is determined by HHS that the recipient has not complied with this section, ''Prostitution and Related Activities.''

Awards will allow recipients reimbursement of pre-award costs such as photocopying, fax, postage or delivery charges and translation.

Guidance for completing your budget can be found on the CDC Web site, at the following Internet address: *http://www.cdc.gov/od/pgo/funding/budgetguide.htm*

IV.6. Other Submission Requirements

Application Submission Address: Submit the original and two hard copies of your application by mail or express delivery service to: Technical Information Management—PA# 04277, CDC Procurement and Grants Office, 2920 Brandywine Road, Atlanta, GA 30341, United States of America. Applications may not be submitted electronically at this time.

V. Application Review Information

V.1. Criteria

You are required to provide measures of effectiveness that will demonstrate the accomplishment of the various identified objectives of the Cooperative Agreement. Measures of effectiveness must relate to the performance goals stated in the ''Purpose'' section of this announcement. Measures must be objective and quantitative, and must measure the intended outcome. These measures of effectiveness must be submitted with the application and will be an element of evaluation.

Your application will be evaluated against the following criteria:

1. Understanding the proposed activity (25 points): Does the applicant demonstrate a good understanding of the extent and limitations of the proposed activity?
2. Feasibility of plan (25 points): Does the applicant's proposed plan for the activity appear feasible?
3. Relevant experience (25 points): Does the applicant have skills and experience relevant to the activities described in this program announcement?
4. Administration and management of project (25 points): Does the applicant seem capable of administering this project and meeting all CDC requirements?

V.2. Review and Selection Process

Applications will be reviewed for completeness by the Procurement and Grants Office (PGO) staff, and for responsiveness by National Center for HIV, STD and TB Prevention (NCHSTP)-Global AIDS Program. Incomplete applications and applications that are non-responsive to the eligibility criteria will not advance through the review process. Applicants will be notified that their application did not meet submission requirements.

An objective review panel will evaluate the complete and responsive application according to the criteria listed in the ''V.1. Criteria'' section above.

V.3. Anticipated Announcement and Award Dates

September 1, 2004.

VI. Award Administration Information

VI.1. Award Notices

The successful applicant will receive a Notice of Grant Award (NGA) from the CDC Procurement and Grants Office. The NGA shall be the only binding, authorizing document between the recipient and CDC. The NGA will be signed by an authorized Grants Management Officer, and mailed to the recipient fiscal officer identified in the application.

Unsuccessful applicants will receive notification of the results of the application review by mail.

VI.2. Administrative and National Policy Requirements

45 CFR Part 74 and Part 92

For more information on the Code of Federal Regulations, see the National Archives and Records Administration at the following Internet address: *http://www.access.gpo.gov/nara/cfr/cfr-table-search.html.*

The following additional requirements may apply to this project:

- AR–1 Human Subjects Requirements
- AR–4 HIV/AIDS Confidentiality Provisions
- AR–5 HIV Program Review Panel Requirements
- AR–10 Smoke-Free Workplace Requirements
- AR–12 Lobbying Restrictions
- AR–14 Accounting System Requirements

Additional information on these requirements can be found on the CDC Web site at the following Internet address: *http://www.cdc.gov/od/pgo/funding/ARs.htm.*

VI.3. Reporting Requirements

You must provide CDC with an original, plus two hard copies of the following reports:

1. Interim progress report, no less than 90 days before the end of the budget period. The progress report will serve as your non-competing continuation application, and must contain the following elements:
   a. Current Budget Period Activities Objectives.
   b. Current Budget Period Financial Progress.
   c. New Budget Period Program Proposed Activity Objectives.
   d. Budget.
   e. Additional Requested Information.
   f. Measures of Effectiveness.
2. Financial status report and annual progress report, no more than 90 days after the end of the budget period.
3. Final financial and performance reports, no more than 90 days after the end of the project period.

These reports must be mailed to the Grants Management or Contract Specialist listed in the ''Agency Contacts'' section of this announcement.

VII. Agency Contacts

For general questions about this announcement, contact: Technical Information Management Section, CDC Procurement and Grants Office, 2920 Brandywine Road, Atlanta, GA 30341, Telephone: (770) 488–2700.

For program technical assistance, contact: Edgar Monterroso/Mark Fussell, Co-Project Officers, HHS/CDC AE Guatemala Unit 3321, APO AA 34024, Telephone: (502) 369–0791, Ext 515, E-mail: *em2z@cdc.gov* or *mfzz@cdc.gov.*

For financial, grants management, or budget assistance, contact: Shirley Wynn, Grants Management Specialist, CDC Procurement and Grants Office, 2920 Brandywine Road, Atlanta, GA 30341, Telephone: (770) 488–1515, E-mail: *Zbx6@cdc.gov.*

Dated: July 23, 2004.

William P. Nichols,

Acting Director, Procurement and Grants Office, Centers for Disease Control and Prevention.

[FR Doc. 04–17279 Filed 7–28–04; 8:45 am]

BILLING CODE 4163–18–P

DEPARTMENT OF HEALTH AND HUMAN SERVICES

Centers for Disease Control and Prevention

Full Access Home-Based VCT Using Outreach Teams in Two Districts in the Republic of Uganda

Announcement Type: New.

Funding Opportunity Number: 04228.

Catalog of Federal Domestic Assistance Number: 93.941.

Key Dates:

Application Deadline: August 30, 2004.

I. Funding Opportunity Description

Authority: This program is authorized under Sections 301(a) and 307 of the Public Health Service Act, [42 U.S.C. sections 241(a) and 242l], and Section 104 of the Foreign Assistance Act of 1961, [22 U.S.C. 215lb], as amended.

Purpose: The Centers for Disease Control and Prevention (CDC) announces the availability of fiscal year (FY) 2004 funds for a cooperative agreement program for Full Access Home-Based Voluntary Counseling and Testing (VCT) using Outreach Teams in Two Districts in the Republic of Uganda.

The overall aim of this program is to implement a model of rapid home-based VCT, which provides access for the entire population of a district to VCT within their community of residence. The service would include referral of those testing positive to sources of basic preventative care and palliative care.

The provision of antiretroviral therapy (ART) is not part of this program.

The United States Government seeks to reduce the impact of HIV/AIDS in specific countries within sub-Saharan Africa, Asia and the Americas. The President's Emergency Plan for AIDS Relief (PEPFAR) encompasses HIV/AIDS activities in more than 75 countries and focuses on 14 countries including Uganda to develop comprehensive and integrated prevention, care and treatment programs. CDC has initiated its Global AIDS Program (GAP) to strengthen capacity and expand activities in the areas of: (1) HIV primary prevention; (2) HIV care, support and treatment; and (3) capacity and infrastructure development including surveillance. Targeted countries represent those with the most severe epidemics and the highest number of new infections. They also represent countries where the potential impact is greatest and where the United States government agencies are already active. Uganda is one of those countries.

CDC's mission in Uganda is to work with Ugandan and international partners to develop, evaluate, and support effective implementation of interventions to prevent HIV and related illnesses and improve care and support of persons with HIV/AIDS.

VCT services are only available at a five percent of health facilities (Uganda Health Facilities Survey 2002). The most recent Demographic and Health Survey in Uganda indicated that 70 percent of people would like to receive HIV testing, but only 10 percent reported that they had been tested. Evidence from studies in several districts suggests that when offered VCT in their homes between 50 and 90 percent utilize the service. If cost effective procedures of offering access to VCT to the whole population over a relatively short period could be developed, then this would provide an important strategy for averting infections and providing timely care to people living with HIV/AIDS (PLWHAs).

The purpose of this program is to provide HIV counseling and testing services to all adults and potentially all children less than five years of age residing in two districts. This program will operate over a period of 12 months in order to evaluate the experience and produce guidelines for cost effective expansion of the program to other districts in Uganda. It is expected that this first phase of the program, including preparation and evaluation, would last 18 months. The program would include referrals to local care providers offering basic preventative care, palliative care, and, if available antiretroviral treatment, to persons with HIV/AIDS in the target districts, but without taking on long term responsibility for financial support of care provision.

The measurable outcomes of the program will be in alignment with goals of the Global AIDS Program (GAP) to reduce HIV transmission and improve care of persons living with HIV. They also will contribute to the goals of the PEPFAR which are: within five years treat more than two million HIV-infected persons with effective combination anti-retroviral therapy; care for seven million HIV-infected and affected persons including those orphaned by HIV/AIDS; and prevent ten million new infections. Specific measurable outcomes of this program should include, but not be limited to, the number, age and sex of clients (individual and couples) provided with HIV counseling and testing (HIV CT), the percentage coverage of the population by HIV CT, unrecognized infections discovered, the cost per client service and per unrecognized infection, and the number of persons with HIV successfully referred to an effective care provider.

Activities

Awardee activities for this program are as follows:

a. Identify project staffing needs; hire and train staff.

b. Identify vehicles, furnishings, fittings, equipment, computers and other fixed assets procurement needs of the project and implementing partners, and acquire from normal sources.

c. Establish suitable administrative and financial management structures including a project office if required.

d. Work with the districts to implement home-based HIV counseling and testing in such a manner that the coverage of the district's population is progressive, predictable and comprehensive, reaching all communities before 12 months have elapsed from the start of VCT delivered under this program.

e. Work with district stakeholders to develop an effective referral system to care providers for those testing positive.

f. Ensure that all persons testing positive receive information about a basic preventive care package and referral to an effective care provider.

g. Support the development of a simple data collection system, integrated within the general Health Management Information System (HMIS) that reflects useful information specifically related to VCT activities and PEPFAR reporting requirements. For program evaluation purposes, some information related to demographic and behavioral risk factors for HIV should be collected.

h. Ensure that a commodities supply and management system is operational in respect to test kits and other necessary items.

i. Develop a simple quality assurance system for HIV counseling and testing in a home-based setting.

j. Evaluate the activity and disseminate conclusions.

k. Develop and produce guidelines and training manuals in collaboration with Ministry of Health and other stakeholders relating to full access HIV CT.

l. Ensure that the above activities are undertaken in a manner consistent with the national HIV/AIDS strategy.

In a cooperative agreement, CDC staff is substantially involved in the program activities, above and beyond routine grant monitoring.

CDC Activities for this program are as follows:

a. Provide technical assistance, as needed, in the development of training curricula, materials, and diagnostic therapeutic guidelines.

b. Collaborate with the recipient, as needed, in the development of an information technology system for medical record keeping and information access and in the analysis of data derived from those records.

c. Assist, as needed, in the monitoring and evaluation of the program and in development of further appropriate initiatives.

d. Assist, as needed, in appropriate analysis and interpretation of program evaluation data collected during training sessions.

e. Provide input, as needed, into the criteria for selection of staff and non-staff implementing personnel for the VCT program.

f. Provide input into the overall program strategy.

g. Collaborate, as needed, with the recipient in the selection of key personnel to be involved in the activities to be performed under this agreement including approval of the overall manager of the program.

Technical assistance and training may be provided directly by CDC staff or through organizations that have successfully competed for funding under a separate CDC contract.

II. Award Information

Type of Award: Cooperative Agreement.

CDC involvement in this program is listed in the Activities Section above.

Fiscal Year Funds: 2004.

Approximate Total Funding: $2,580,000.

Approximate Number of Awards: Two.

Approximate Average Award: $645,000 per award (This amount is for the first 12-month budget period, and includes only direct costs).

Floor of Award Range: None.

Ceiling of Award Range: $1,290,000.

Anticipated Award Date: September 1, 2004.

Budget Period Length: 12 months.

Project Period Length: Two years.

Throughout the project period, CDC's commitment to continuation of awards will be conditioned on the availability of funds, evidence of satisfactory progress by the recipient (as documented in required reports), and the determination that continued funding is in the best interest of the Federal Government.

III. Eligibility Information

III.1. Eligible Applicants

Applications may be submitted by public nonprofit organizations, private nonprofit organizations, universities, colleges, research institutions, hospitals, and faith-based organizations that meet the following criterion:

1. Have at least three years of documented HIV counseling and testing program experience in Africa.

III.2. Cost Sharing or Matching

Matching funds are not required for this program.

III.3. Other

If you request a funding amount greater than the ceiling of the award range, your application will be considered non-responsive, and will not be entered into the review process. You will be notified that your application did not meet the submission requirements.

If your application is incomplete or non-responsive to the requirements listed in this section, it will not be entered into the review process. You will be notified that your application did not meet submission requirements.

Note: Title 2 of the United States Code Section 1611 states that an organization described in Section 501c(4) of the Internal Revenue Code that engages in lobbying activities is not eligible to receive Federal funds constituting an award, grant or loan.

Private, non-profit organizations are encouraged to submit with their applications the survey located under ''Grant Related Documents and Forms'' titled ''Survey for Private, Non-Profit Grant Applicants'' at *http://www.acf.hhs.gov/programs/ofs/final_fy04_424_survey.doc.*

IV. Application and Submission Information

IV.1. Address To Request Application Package

To apply for this funding opportunity use application form PHS 5161. Application forms and instructions are available in an interactive format on the CDC Web site, at the following Internet address: *http://www.cdc.gov/od/pgo/forminfo.htm.* If you do not have access to the Internet, or if you have difficulty accessing the forms on-line, you may contact the CDC Procurement and Grants Office Technical Information Management Section (PGO–TIM) staff at: 770–488–2700. Application forms can be mailed to you.

IV.2. Content and Form of Submission

Application: You must submit a project narrative with your application forms. The narrative must be submitted in the following format:

- Maximum number of pages: 25. If your narrative exceeds the page limit, only the first pages, which are within the page limit, will be reviewed.
- Font size: 12 point unreduced.
- Double spaced.
- Paper size: 8.5 by 11 inches.
- Page margin size: One inch.
- Printed only on one side of page.
- Held together only by rubber bands or metal clips; not bound in any other way.
- All pages should be numbered, and a complete index to the application and any appendices must be included.
- Submitted in English.

Your narrative should address activities to be conducted over the entire project period, and must include, at a minimum, the following items in the order listed: a plan, objectives, activities, methods, an evaluation framework, a budget highlighting any supplies mentioned in the Program Requirements and any proposed capital expenditure.

Additional information is optional and may be included in the application appendices. The appendices will not be counted toward the narrative page limit. Additional information could include but is not limited to: organizational charts, curriculum vitas, letters of support, *etc.*

The budget justification will not be counted in the page limit stated above.

You are required to have a Dun and Bradstreet Data Universal Numbering System (DUNS) number to apply for a grant or cooperative agreement from the Federal government. The DUNS number is a nine-digit identification number, which uniquely identifies business entities. Obtaining a DUNS number is easy and there is no charge. To obtain a DUNS number, access *www.dunandbradstreet.com* or call 1–866–705–5711.

For more information, see the CDC Web site at: *http://www.cdc.gov/od/pgo/funding/pubcommt.htm.* If your application form does not have a DUNS number field, please write your DUNS number at the top of the first page of your application, and/or include your DUNS number in your application cover letter.

Additional requirements that may require you to submit additional documentation with your application are listed in section ''VI.2. Administrative and National Policy Requirements.''

IV.3. Submission Dates and Times

Application Deadline Date: August 30, 2004.

Explanation of Deadlines: Applications must be received in the CDC Procurement and Grants Office by 4 p.m. Eastern Time on the deadline date. If you send your application by the United States Postal Service or commercial delivery service, you must ensure that the carrier will be able to guarantee delivery of the application by the closing date and time. If CDC receives your application after closing due to: (1) carrier error, when the carrier accepted the package with a guarantee for delivery by the closing date and time, or (2) significant weather delays or natural disasters, you will be given the opportunity to submit documentation of the carrier's guarantee. If the documentation verifies a carrier problem, CDC will consider the application as having been received by the deadline.

This announcement is the definitive guide on application submission address and deadline. It supersedes information provided in the application instructions. If your application does not meet the deadline above, it will not be eligible for review, and will be discarded. You will be notified that your application did not meet the submission requirements.

CDC will not notify you upon receipt of your application. If you have a question about the receipt of your application, first contact your courier. If you still have a question, contact the PGO–TIM staff at: 770–488–2700. Before calling, please wait two to three days after the application deadline. This will allow time for applications to be processed and logged.

IV.4 Intergovernmental Review of Applications

Executive Order 12372 does not apply to this program.

IV.5. Funding Restrictions

Funding Restrictions

Restrictions, which must be taken into account while writing your budget, are as follows:

- Funds may not be used for any new construction.
- Antiretroviral Drugs—The purchase of antiretrovirals, reagents, and laboratory equipment for antiretroviral treatment projects require pre-approval from the HHS/CDC Officials.
- Needle Exchange—No funds appropriated under this Act shall be used to carry out any program of distributing sterile needles or syringes for the hypodermic injection of any illegal drug.
- Funds may be spent for reasonable program purposes, including personnel, training, travel, supplies and services. Equipment may be purchased and renovations completed if deemed necessary to accomplish program objectives; however, prior approval by CDC officials must be requested in writing.
- All requests for funds contained in the budget shall be stated in U.S. dollars. Once an award is made, CDC will not compensate foreign grantees for currency exchange fluctuations through the issuance of supplemental awards.
- The costs that are generally allowable in grants to domestic organizations are allowable to foreign institutions and international organizations, with the following exception: With the exception of the American University, Beirut, and the World Health Organization, Indirect Costs will not be paid (either directly or through sub-award) to organizations located outside the territorial limits of the United States or to international organizations regardless of their location.
- The applicant may contract with other organizations under this program; however, the applicant must perform a substantial portion of the activities, including program management and operations, and delivery of prevention and care services for which funds are required).
- Prostitution and Related Activities—The U.S. Government is opposed to prostitution and related activities, which are inherently harmful and dehumanizing, and contribute to the phenomenon of trafficking in persons.

Any entity that receives, directly or indirectly, U.S. Government funds in connection with this document (''recipient'') cannot use such U.S. Government funds to promote or advocate the legalization or practice of prostitution or sex trafficking. Nothing in the preceding sentence shall be construed to preclude the provision to individuals of palliative care, treatment, or post-exposure pharmaceutical prophylaxis, and necessary pharmaceuticals and commodities, including test kits, condoms, and, when proven effective, microbicides. A recipient that is otherwise eligible to receive funds in connection with this document to prevent, treat, or monitor HIV/AIDS shall not be required to endorse or utilize a multisectoral approach to combating HIV/AIDS, or to endorse, utilize, or participate in a prevention method or treatment program to which the recipient has a religious or moral objection. Any information provided by recipients about the use of condoms as part of projects or activities that are funded in connection with this document shall be medically accurate and shall include the public health benefits and failure rates of such use.

In addition, any foreign recipient must have a policy explicitly opposing, in its activities outside the United States, prostitution and sex trafficking.

The following definitions apply for purposes of this clause:

- Sex trafficking means the recruitment, harboring, transportation, provision, or obtaining of a person for the purpose of a commercial sex act. 22 U.S.C. 7102(9).
- A foreign recipient includes an entity that is not organized under the laws of any State of the United States, the District of Columbia or the Commonwealth of Puerto Rico. *Restoration of the Mexico City Policy*, 66 FR 17303, (March 28, 2001).

All recipients must insert provisions implementing the applicable parts of this section, ''Prostitution and Related Activities,'' in all sub agreements under this award. These provisions must be express terms and conditions of the sub agreement, acknowledge that each certification to compliance with this section, ''Prostitution and Related Activities,'' are a prerequisite to receipt of U.S. government funds in connection with this document, and must acknowledge that any violation of the provisions shall be grounds for unilateral termination of the agreement prior to the end of its term. In addition, all recipients must ensure, through contract, certification, audit, and/or any other necessary means, all the applicable requirements in this section, ''Prostitution and Related Activities,'' are met by any other entities receiving U.S. government funds from the recipient in connection with this document, including without limitation, the recipients' sub-grantees, sub-contractors, parents, subsidiaries, and affiliates. Recipients must agree that HHS may, at any reasonable time, inspect the documents and materials maintained or prepared by the recipient in the usual course of its operations that relate to the organization's compliance with this section, ''Prostitution and Related Activities.''

All primary grantees receiving U.S. Government funds in connection with this document must certify compliance prior to actual receipt of such funds in a written statement referencing this document (*e.g.*, ''[Recipient's name] certifies compliance with the section, Prostitution and Related Activities. '') addressed to the agency's grants officer. Such certifications are prerequisites to the payment of any U.S. Government funds in connection with this document.

Recipients' compliance with this section, ''Prostitution and Related Activities,'' is an express term and condition of receiving U.S. government funds in connection with this document, and any violation of it shall be grounds for unilateral termination by HHS of the agreement with HHS in connection with this document prior to the end of its term. The recipient shall refund to HHS the entire amount furnished in connection with this document in the event it is determined by HHS that the recipient has not complied with this section, ''Prostitution and Related Activities.''

Funds may be used for:

1. HIV counseling and testing within the program district(s) including required training, test kit purchase, simple laboratory refurbishment, vehicles and logistical support to testing teams, additional staffing and other related commodities and expenses.
2. Evaluation and management of the activities.

Awards will not allow reimbursement of pre-award costs. Guidance for completing your budget can be found on the CDC Web site, at the following Internet address: *http://www.cdc.gov/od/pgo/funding/budgetguide.htm*.

IV.6. Other Submission Requirements

Application Submission Address: Submit your application by mail or express delivery service to: Technical Information Management-PA 04228, CDC Procurement and Grants Office, 2920 Brandywine Road, Atlanta, GA

30341. Applications may not be submitted electronically at this time.

V. Application Review Information

V.1. Criteria

You are required to provide measures of effectiveness that will demonstrate the accomplishment of the various identified objectives of the cooperative agreement. Measures of effectiveness must relate to the performance goals stated in the ''Purpose'' section of this announcement. Measures must be objective and quantitative, and must measure the intended outcome. These measures of effectiveness must be submitted with the application and will be an element of evaluation.

Your application will be evaluated against the following criteria:

1. Understanding the issues, principles and systems requirements involved in delivering community and home-based VCT which provides access to the whole population of a district in the context of Uganda (25 points): Does the applicant demonstrate an understanding of the ethical, clinical, social, managerial and other practical issues involved in delivering comprehensive VCT in a cost effective and sensitive manner in the setting of a Ugandan district?

2. Ability to carry out the proposal (25 points): Does the applicant demonstrate the capability to achieve the purpose of this proposal?

3. Work Plan (25 points): Does the applicant describe activities, which are realistic, achievable, time-framed and appropriate to complete this program?

4. Personnel (15 points): Are the personnel, including qualifications, training, availability, and experience adequate to carry out the proposed activities?

5. Administrative and Accounting Plan (10 points): Is there a plan to prepare reports, monitoring and audit expenditures under this agreement, manage the resources of the program and produce, collect and analyze performance data?

6. Budget (not scored): Is the budget for conducting the activity itemized and well-justified and consistent with stated activities and planned program activities?

7. Human Subjects (not scored, but evaluated): Does the application adequately address the requirements of Title 45 CFR Part 46 for the protection of human subjects?

V.2. Review and Selection Process

Applications will be reviewed for completeness by the Procurement and Grants Office (PGO) staff and for responsiveness by National Center for HIV, STD, and TB Prevention (NCHSTP). Incomplete applications and applications that are non-responsive to the eligibility criteria will not advance through the review process. Applicants will be notified that their application did not meet submission requirements.

An objective review panel will evaluate complete and responsive applications according to the criteria listed in the ''V.1. Criteria'' section above.

V.3. Anticipated Announcement and Award Dates

September 1, 2004.

VI. Award Administration Information

VI.1. Award Notices

Successful applicants will receive a Notice of Grant Award (NGA) from the CDC Procurement and Grants Office. The NGA shall be the only binding, authorizing document between the recipient and CDC. The NGA will be signed by an authorized Grants Management Officer, and mailed to the recipient fiscal officer identified in the application.

Unsuccessful applicants will receive notification of the results of their application review by mail.

VI.2. Administrative and National Policy Requirements

45 CFR Part 74 and Part 92

For more information on the Code of Federal Regulations, see the National Archives and Records Administration at the following Internet address: *http://www.access.gpo.gov/nara/cfr/cfr-table-search.html*.

The following additional requirements apply to this project:

- AR–1 Human Subjects Requirements
- AR–10 Smoke-Free Workplace Requirements

Additional information on these requirements can be found on the CDC Web site at the following Internet address: *http://www.cdc.gov/od/pgo/funding/ARs.htm*.

VI.3. Reporting Requirements:

You must provide CDC with an original, plus two hard copies of the following reports:

1. Semi-annual progress reports, no less than 30 days after the end of the reporting period.

2. Interim progress report, no less than 90 days before the end of the budget period. The progress report will serve as your non-competing continuation application, and must contain the following elements:

a. Current Budget Period Activities Objectives.

b. Current Budget Period Financial Progress.

c. New Budget Period Program Proposed Activity Objectives.

d. Detailed Line-Item Budget and Justification.

e. Additional Requested Information.

f. Measures and Effectiveness.

3. Financial status report, no more than 90 days after the end of the budget period.

4. Final financial and performance reports, no more than 90 days after the end of the project period.

These reports must be mailed to the Grants Management or Contract Specialist listed in the ''Agency Contacts'' section of this announcement.

VII. Agency Contacts

For general questions about this announcement, contact: Technical Information Management Section, CDC Procurement and Grants Office, 2920 Brandywine Road, Atlanta, GA 30341, Telephone: 770–488–2700.

For program technical assistance, contact: Jonathan Mermin, MD, MPH, Global AIDS Program [GAP], Uganda Country Team, National Center for HIV, STD, TB Prevention, Centers for Disease Control and Prevention [CDC], PO Box 49, Entebbe, Uganda. Telephone +256–41320776, E-mail: *jhm@cdc.gov*.

For financial, grants management, or budget assistance, contact: Shirley Wynn, Grants Management Specialist, Procurement and Grants Office, Centers for Disease Control and Prevention, 2920 Brandywine Road, Atlanta, GA 30341–4146, Telephone: 770–488–1515, E-mail: *Zbx6@cdc.gov*.

Dated: July 23, 2004.

William P. Nichols,

Acting Director, Procurement and Grants Office, Centers for Disease Control and Prevention.

[FR Doc. 04–17280 Filed 7–28–04; 8:45 am]

BILLING CODE 4163–18–P

DEPARTMENT OF HEALTH AND HUMAN SERVICES

Centers for Disease Control and Prevention

[Program Announcement 04256]

Expansion of Psychosocial Support and Peer Counseling Services to HIV-Infected Women and Their Families in Botswana—Amendment

A notice announcing the availability of fiscal year (FY) 2004 funds for Expansion of Psychosocial Support and Peer Counseling Services to HIV-

Infected Women and Their Families in Botswana was published in the **Federal Register** on July 20, 2004, volume 69, number 138, pages 43421–43425. The notice is amended as follows:

- Page 43421, second column, the correct Catalog of Federal Domestic Assistance number is 93.941.
- Page 43421, second column, the correct application due date is August 19, 2004.

Dated: July 23, 2004.

William P. Nichols,

Acting Director, Procurement and Grants Office, Centers for Disease Control and Prevention.

[FR Doc. 04–17281 Filed 7–28–04; 8:45 am]

BILLING CODE 4163–18–P

DEPARTMENT OF HEALTH AND HUMAN SERVICES

Centers for Disease Control and Prevention

Advisory Board on Radiation and Worker Health (ABRWH), National Institute for Occupational Safety and Health (NIOSH)

In accordance with section 10(a)(2) of the Federal Advisory Committee Act (Pub. L. 92–463), the Centers for Disease Control and Prevention (CDC) announces the following subcommittee and committee meetings:

Name: Advisory Board on Radiation and Worker Health (ABRWH), National Institute for Occupational Safety and Health (NIOSH), and Subcommittee for Dose Reconstruction and Site Profile Reviews of ABRWH, NIOSH.

Times and Dates: 1 p.m.–4 p.m., August 23, 2004, Subcommittee. 9 a.m.–8:30 p.m., August 24, 2004, Full Committee. 8 a.m.–4 p.m., August 25, 2004, Full Committee.

Place: Shilo Inn Suites, 780 Lindsay Boulevard, Idaho Falls, Idaho 83402, telephone 208/523–0088, fax 208/525–8420.

Status: Open to the public, limited only by the space available. The subcommittee meeting room accommodates approximately 20 people and the committee meeting room accommodates approximately 65 people.

Background: The Advisory Board on Radiation and Worker Health (''the Board'') was established under the Energy Employees Occupational Illness Compensation Program Act (EEOICPA) of 2000 to advise the President, through the Secretary of Health and Human Services (HHS), on a variety of policy and technical functions required to implement and effectively manage the new compensation program. Key functions of the Board include providing advice on the development of probability of causation guidelines which have been promulgated by HHS as a final rule, advice on methods of dose reconstruction which have also been promulgated by HHS as a final rule, evaluation of the scientific validity and quality of dose reconstructions conducted by the NIOSH for qualified cancer claimants, and advice on petitions to add classes of workers to the Special Exposure Cohort.

In December 2000 the President delegated responsibility for funding, staffing, and operating the Board to HHS, which subsequently delegated this authority to the CDC. NIOSH implements this responsibility for CDC. The charter was issued on August 3, 2001, and renewed on August 3, 2003.

Purpose: This board is charged with (a) providing advice to the Secretary, HHS, on the development of guidelines under Executive Order 13179; (b) providing advice to the Secretary, HHS, on the scientific validity and quality of dose reconstruction efforts performed for this Program; and (c) upon request by the Secretary, HHS, advise the Secretary on whether there is a class of employees at any Department of Energy facility who were exposed to radiation but for whom it is not feasible to estimate their radiation dose, and on whether there is reasonable likelihood that such radiation doses may have endangered the health of members of this class.

Matters To Be Discussed: Agenda for this meeting will focus on a subcommittee working session; program status reports from NIOSH and Department of Labor; site profile status; Privacy Act and FACA requirements; conflict of interest and quality assurance plan; use of uncertainty in dose reconstruction; scientific research issues update; subcommittee status; and a Board working session. There will be an evening public comment period scheduled for August 24, 2004, and a public comment period at midday on August 25, 2004.

The agenda is subject to change as priorities dictate.

Contact Person for More Information: Larry Elliott, Executive Secretary, ABRWH, NIOSH, CDC, 4676 Columbia Parkway, Cincinnati, Ohio 45226, telephone 513/533–6825, fax 513/533–6826.

The Director, Management Analysis and Services Office, has been delegated the authority to sign **Federal Register** notices pertaining to announcements of meetings and other committee management activities for both CDC and the Agency for Toxic Substances and Disease Registry.

Dated: July 22, 2004.

Alvin Hall,

Director, Management Analysis and Services Office, Centers for Disease Control and Prevention.

[FR Doc. 04–17214 Filed 7–28–04; 8:45 am]

BILLING CODE 4163–19–P

DEPARTMENT OF HEALTH AND HUMAN SERVICES

Food and Drug Administration

[Docket No. 2002E–0342]

Determination of Regulatory Review Period for Purposes of Patent Extension; LEA'S SHIELD

AGENCY: Food and Drug Administration, HHS.

ACTION: Notice.

SUMMARY: The Food and Drug Administration (FDA) has determined the regulatory review period for LEA'S SHIELD and is publishing this notice of that determination as required by law. FDA has made the determination because of the submission of an application to the Director of Patents and Trademarks, Department of Commerce, for the extension of a patent which claims that medical device.

ADDRESSES: Submit written comments and petitions to the Division of Dockets Management (HFA–305), Food and Drug Administration, 5630 Fishers Lane, rm. 1061, Rockville, MD 20852. Submit electronic comments to *http://www.fda.gov/dockets/ecomments*.

FOR FURTHER INFORMATION CONTACT: Claudia V. Grillo, Office of Regulatory Policy (HFD–013), Food and Drug Administration, 5600 Fishers Lane, Rockville, MD 20857, 240–453–6699.

SUPPLEMENTARY INFORMATION: The Drug Price Competition and Patent Term Restoration Act of 1984 (Public Law 98–417) and the Generic Animal Drug and Patent Term Restoration Act (Public Law 100–670) generally provide that a patent may be extended for a period of up to 5 years so long as the patented item (human drug product, animal drug product, medical device, food additive, or color additive) was subject to regulatory review by FDA before the item was marketed. Under these acts, a product's regulatory review period forms the basis for determining the amount of extension an applicant may receive.

A regulatory review period consists of two periods of time: A testing phase and an approval phase. For medical devices, the testing phase begins with a clinical investigation of the device and runs until the approval phase begins. The approval phase starts with the initial submission of an application to market the device and continues until permission to market the device is granted. Although only a portion of a regulatory review period may count toward the actual amount of extension that the Director of Patents and Trademarks may award (half the testing phase must be subtracted as well as any time that may have occurred before the patent was issued), FDA's determination of the length of a regulatory review period for a medical device will include all of the testing phase and approval phase as specified in 35 U.S.C. 156(g)(3)(B).

FDA recently approved for marketing the medical device LEA'S SHIELD. LEA'S SHIELD is indicated for use by

women of childbearing age who desire to prevent or postpone pregnancy. Subsequent to this approval, the Patent and Trademark Office received a patent term restoration application for LEA'S SHIELD (U.S. Patent No. 4,703,752) from Shlome Gabbay, and the Patent and Trademark Office requested FDA's assistance in determining this patent's eligibility for patent term restoration. In a letter dated February 3, 2003, FDA advised the Patent and Trademark Office that this medical device had undergone a regulatory review period and that the approval of LEA'S SHIELD represented the first permitted commercial marketing or use of the product. Thereafter, the Patent and Trademark Office requested that FDA determine the product's regulatory review period.

FDA has determined that the applicable regulatory review period for LEA'S SHIELD is 5,596 days. Of this time, 5,418 days occurred during the testing phase of the regulatory review period, while 178 days occurred during the approval phase. These periods of time were derived from the following dates:

1. *The date an exemption under section 520(g) of the Federal Food, Drug, and Cosmetic Act (the act) (21 U.S.C. 360j(g)) involving this device became effective*: November 19, 1986. FDA has verified the applicant's claim that the date the investigational device exemption required under section 520(g) of the act for human tests to begin became effective November 19, 1986.

2. *The date the application was initially submitted with respect to the device under section 515 of the act (21 U.S.C. 360e)*: September 18, 2001. FDA has verified the applicant's claim that the premarket approval application (PMA) for LEA'S SHIELD (PMA P010046) was initially submitted September 18, 2001.

3. *The date the application was approved*: March 14, 2002. FDA has verified the applicant's claim that PMA P010046 was approved on March 14, 2002.

This determination of the regulatory review period establishes the maximum potential length of a patent extension. However, the U.S. Patent and Trademark Office applies several statutory limitations in its calculations of the actual period for patent extension. In its application for patent extension, this applicant seeks 1,825 days of patent term extension.

Anyone with knowledge that any of the dates as published are incorrect may submit to the Division of Dockets Management (see **ADDRESSES**) written or electronic comments and ask for a redetermination by September 27, 2004. Furthermore, any interested person may petition FDA for a determination regarding whether the applicant for extension acted with due diligence during the regulatory review period by January 25, 2005. To meet its burden, the petition must contain sufficient facts to merit an FDA investigation. (See H. Rept. 857, part 1, 98th Cong., 2d sess., pp. 41–42, 1984.) Petitions should be in the format specified in 21 CFR 10.30.

Comments and petitions should be submitted to the Division of Dockets Management. Three copies of any mailed information are to be submitted, except that individuals may submit one copy. Comments are to be identified with the docket number found in brackets in the heading of this document. Comments and petitions may be seen in the Division of Dockets Management between 9 a.m. and 4 p.m., Monday through Friday.

Dated: June 24, 2004.

Jane A. Axelrad,

Associate Director for Policy, Center for Drug Evaluation and Research.

[FR Doc. 04–17209 Filed 7–28–04; 8:45 am]

BILLING CODE 4160–01–S

DEPARTMENT OF HEALTH AND HUMAN SERVICES

Food and Drug Administration

[Docket No. 2003D–0558]

Compliance Policy Guide, Guidance Levels for Radionuclides in Domestic and Imported Foods, Availability; and Supporting Document, Supporting Document for Guidance Levels for Radionuclides in Domestic and Imported Foods, Availability

AGENCY: Food and Drug Administration, HHS.

ACTION: Notice.

SUMMARY: The Food and Drug Administration (FDA) is announcing the availability of a compliance policy guide (CPG) entitled ''Guidance Levels for Radionuclides in Domestic and Imported Foods.'' This document is intended to make FDA offices and the industry aware of FDA's guidance for enforcement concerning radionuclide activity concentration in domestic food in interstate commerce or food offered for import. This CPG rescinds and replaces CPG Sec. 560.750 Radionuclides in Imported Foods—Levels of Concern (CPG 7119.14). The agency also is announcing the availability of a final supporting document entitled ''Supporting Document for Guidance Levels for Radionuclides in Domestic and Imported Foods.''

DATES: Submit written or electronic comments concerning the CPG or the final supporting document at any time.

ADDRESSES: Submit written requests for single copies of the CPG entitled ''Guidance Levels for Radionuclides in Domestic and Imported Foods'' and/or the final supporting document entitled ''Supporting Document for Guidance Levels for Radionuclides in Domestic and Imported Foods'' to Paul South (see **FOR FURTHER INFORMATION CONTACT**). Send two self-addressed adhesive labels to assist that office in processing your request. Submit written comments to the Division of Dockets Management (HFA–305), Food and Drug Administration, 5630 Fishers Lane, rm. 1061, Rockville, MD 20852. Submit electronic comments to *http://www.fda.gov/dockets/ecomments*. See the **SUPPLEMENTARY INFORMATION** section for electronic access to these documents.

FOR FURTHER INFORMATION CONTACT: Paul South, Center for Food Safety and Applied Nutrition (HFS–306), Food and Drug Administration, 5100 Paint Branch Pkwy., College Park, MD 20740, 301–436–1640.

SUPPLEMENTARY INFORMATION:

I. Background

In the **Federal Register** of January 14, 2004 (69 FR 2146), FDA announced the availability of a draft CPG entitled ''Guidance Levels for Radionuclides in Domestic and Imported Foods,'' and a draft supporting document entitled ''Supporting Document for Guidance Levels for Radionuclides in Domestic and Imported Foods.'' After considering comments received on these documents, FDA has finalized the CPG and supporting document. The CPG rescinds and replaces CPG Sec. 560.750 Radionuclides in Imported Foods—Levels of Concern (CPG 7119.14).

FDA received five comments on the draft CPG. The comments represented the views of individual consumers, a Federal agency, a State health department, and a foreign government. One comment was rejected because it was outside the scope of the draft CPG. The majority of comments supported the proposed guidance levels while a number of comments suggested changes or modification to other aspects of the draft CPG. After considering carefully the comments received, the agency revised the draft CPG to include a reference to methods for radionuclide analysis of foods.

The CPG is being issued as level 1 guidance consistent with FDA's good

guidance practices regulation (21 CFR 10.115). The CPG represents the agency's current thinking on its enforcement process concerning the adulteration of food with radionuclides. It does not create or confer any rights for or on any person and does not operate to bind FDA or the public.

II. Comments

Interested persons may submit to the Division of Dockets Management (see **ADDRESSES**) written or electronic comments regarding the CPG entitled ''Guidance Levels for Radionuclides in Domestic and Imported Foods,'' and/or the final supporting document entitled ''Supporting Document for Guidance Levels for Radionuclides in Domestic and Imported Foods.'' Submit a single copy of electronic comments or two paper copies of any mailed comments, except that individuals may submit one paper copy. Comments are to be identified with the docket number found in the brackets in the heading of this document. A copy of the CPG, the final supporting document, and received comments may be seen in the Division of Dockets Management between 9 a.m. and 4 p.m., Monday through Friday.

III. Electronic Access

Persons with access to the Internet may obtain the CPG and final supporting document may be accessed from the home pages of the Center for Food Safety and Applied Nutrition at *http://www.cfsan.fda.gov* and the Office of Regulatory Affairs at *http://www.fda.gov/ora/*.

Dated: July 22, 2004.

John M. Taylor,

Associate Commissioner for Regulatory Affairs.

[FR Doc. 04–17208 Filed 7–28–04; 8:45 am]

BILLING CODE 4160–01–S

DEPARTMENT OF HEALTH AND HUMAN SERVICES

Office of Inspector General

Program Exclusions: Correction

AGENCY: Office of Inspector General, HHS.

ACTION: Notice of program exclusions; correction.

SUMMARY: The HHS Office of Inspector General published a document in the **Federal Register** of February 14, 2003, imposed exclusions. The document contained an incorrect exclusion type.

FOR FURTHER INFORMATION CONTACT: Jacqueline Freeman, (410) 786–5197.

Correction

In the **Federal Register** of February 14, 2003, in FR Doc. 68 FR 7569, on page 7569, in the second column, correct the ''exclusion type'' caption to read:

Fraud/Kickbacks/Other Prohibited Acts/Settlement Agreements

L & L Psychological Svcs, P C, Old Greenwich, CT, 10/31/2002.

Michael W. Lonski, Old Greenwich, CT, 10/31/2002.

Michael Lonski, PhD, P C, Old Greenwich, CT, 10/31/2002.

Dated: July 20, 2004.

Katherine B. Petrowski,

Director, Exclusions Staff, Office of Inspector General.

[FR Doc. 04–17230 Filed 7–28–04; 8:45 am]

BILLING CODE 4150–04–P

DEPARTMENT OF HOMELAND SECURITY

Coast Guard

DEPARTMENT OF TRANSPORTATION

Maritime Administration

[USCG–2004–17696]

Main Pass Energy Hub LLC Liquefied Natural Gas Deepwater Port License Application; Preparation of Environmental Impact Statement

AGENCY: Coast Guard, DHS; and Maritime Administration, DOT.

ACTION: Notice of intent; notice of public meeting; and request for public comments.

SUMMARY: The U.S. Coast Guard and the Maritime Administration announce that the Coast Guard intends to prepare an environmental impact statement as part of the environmental review of the license application for the proposed Main Pass Energy Hub deepwater port, to be located approximately 16 miles southeast of Venice, Louisiana with its associated onshore and offshore components. Publication of this notice begins a public scoping process that will help determine the scope of issues to be addressed in the environmental impact statement and identify the significant environmental issues related to this license application. Finally, this notice solicits public involvement in the scoping process, and announces public meetings and a public comment period to facilitate that involvement.

DATES: The public meetings will be held August 10, 11, and 12, 2004, from 3 p.m. to 7 p.m. in Mobile, Alabama, Pascagoula, Mississippi, and New Orleans, Louisiana, respectively. Each meeting will consist of an informational open house, from 3 p.m. to 4:30 p.m., and a public scoping meeting, from 5 p.m. to 7 p.m. All meeting spaces will be wheelchair-accessible. Comments and related material must reach the docket on or before August 30, 2004.

ADDRESSES:

The Mobile, Alabama informational open house and public meeting will be held at:

Mobile Government Plaza, 205 Government Street, Mobile, Alabama 36644, (251) 574–5058.

The Pascagoula, Mississippi informational open house and public meeting will be held at:

Jackson County Fairgrounds Assembly Hall, 2902 Shortcut Road, Pascagoula, Mississippi 39567, (228) 762–6043.

The New Orleans, Louisiana informational open house and public meeting will be held at:

New Orleans Marriott Hotel, 555 Canal Street, New Orleans, Louisiana 70130, 504–581–1000.

You need not attend the meetings in order to comment. You may also submit comments identified by docket number USCG–2004–17696 to the Docket Management Facility at the U.S. Department of Transportation. To avoid duplication, please use only one of the following methods:

(1) Electronically through the Web site for the Docket Management System, at *http://dms.dot.gov*.

(2) By mail to the Docket Management Facility, U.S. Department of Transportation, Room PL–401, 400 Seventh Street SW., Washington, DC 20590–0001.

(3) By fax to the Docket Management Facility at (202) 493–2251.

(4) By delivery to Room PL–401 on the Plaza level of the Nassif Building, 400 Seventh Street SW., Washington, DC, from 9 a.m. to 5 p.m., Monday through Friday, except Federal holidays. The telephone number is (202) 366–9329.

(5) By the Federal eRulemaking Portal at *http://www.regulations.gov/*.

The Docket Management Facility maintains the public docket for this notice. Comments and material received from the public will become part of this docket and will be available for inspection or copying in Room PL–401 on the Plaza level of the Nassif Building, 400 Seventh Street SW., Washington, DC, from 9 a.m. to 5 p.m. Monday through Friday, except Federal holidays. This docket may also be found on the Internet at *http://dms.dot.gov*.

FOR FURTHER INFORMATION CONTACT: If you have questions on the application, this notice, or the meetings, or if you want to be notified when the draft and final environmental impact statements become available, call Kenneth Smith at 202–267–0578, or e-mail at *KNSmith@comdt.uscg.mil*. If you have questions on the pipeline that is subject to Federal Energy Regulatory Commission (FERC) jurisdiction, call James Martin at 202–502–8045, or e-mail at *james.martin@ferc.gov*. If you have questions on viewing or submitting material to the docket, call Andrea M. Jenkins, Program Manager, Docket Operations, telephone 202–366–0271.

SUPPLEMENTARY INFORMATION:

Scoping Meetings and Request for Comments

We seek public review of and comment on this license application, particularly with respect to the environmental review discussed in this notice. Public input on environmental concerns related to the application, suggested sources of relevant data, and suggested methods for environmental analysis are especially welcome.

The Coast Guard will hold informational open houses and scoping meetings for interested members of the public, as described under **DATES** and **ADDRESSES**. Meeting facilities are wheelchair accessible. If you need other special assistance in order to participate in these sessions (for example, sign language interpretation), please contact the person named in **FOR FURTHER INFORMATION CONTACT**, and we will try to make reasonable accommodation for your needs. We ask that you make such requests at least three (3) business days before the scheduled meeting. Include a contact person's name and telephone number, your specific need, and (for persons with hearing impairments) a TDD number.

If you submit comments or related material to the docket (*see* **DATES** and **ADDRESSES**), please make your comment as specific as possible and give us the reasons for each comment. If you mail or hand-deliver printed documents, please submit them unbound and in a format suitable for copying and electronic filing, no larger than 8½ by 11 inches. If you submit comments or material by mail and want confirmation that it has reached the facility, please enclose a stamped, self-addressed postcard or envelope. We will consider all comments and material received during the comment period. All comments received will be posted, without change, to *http://dms.dot.gov/* and will include any personal information you have provided.

Anyone can search the electronic form of all comments received into any of our dockets by the name of the individual submitting the comment (or signing the comment, if submitted on behalf of an association, business, labor union, etc.). You may review the Department of Transportation's Privacy Act Statement in the **Federal Register** published on April 11, 2000 (65 FR 19477), or you may visit *http://dms.dot.gov/*.

Environmental Review

Deepwater ports for the transportation, storage, or further handling of oil or natural gas must be licensed in accordance with the Deepwater Port Act of 1974, as amended, 33 U.S.C. 1501 *et seq.* (''the Act''). The Coast Guard and the Maritime Administration (MARAD) jointly process applications for deepwater port licenses. A notice of application for the Main Pass Energy Hub liquefied natural gas deepwater port proposed by Freeport-McMoRan Energy LLC, to be located in the Gulf of Mexico approximately 16 miles southeast of Venice, Louisiana was published in the **Federal Register** on June 9, 2004 (69 FR 32363). That notice contains a fuller description of the proposed deepwater port. The complete application, including environmental documentation provided by the applicant, is available in the public docket. The six-mile onshore portion of this pipeline above the mean high water line falls under the jurisdiction of FERC and must receive a separate authorization from FERC. Additional information about the onshore segment of the project is available on the FERC Internet Web site (*http://www.ferc.gov*) using the eLibrary link. Click on the eLibrary link, click on ''General Search'' and enter the docket number excluding the last three digits in the Docket Number field (*e.g.*, CP04–374, CP04–375 and CP04–376). Be sure you have selected an appropriate date range. For assistance with eLibrary, the eLibrary helpline can be reached at 1–866–208–3676, TTY (202) 502–8659, or at FERC Online Support at *FERCOnlineSupport@ferc.gov*.

The Act establishes a licensing process for proposed deepwater ports, and that process includes review of the proposed port's natural and human environmental impacts. Consistent with the DWPA, this environmental review must comply with the National Environmental Policy Act of 1969 (NEPA), 42 U.S.C. 4332, and with the following authorities: Coast Guard regulations in 33 CFR part 148, Council on Environmental Quality regulations in 40 CFR parts 1500–1508, DOT Order 5610.1C (Procedures for Considering Environmental Impacts), and Coast Guard Commandant's Instruction (COMDTINST) M16475.1D. Environmental review includes public involvement, and consultation with States deemed adjacent to the proposed port (in this case, Louisiana, Alabama and Mississippi). The Coast Guard is the lead agency for determining the required scope of environmental review, and in this case the Coast Guard has determined that an environmental impact statement (EIS) must be prepared. Even though an affiliate of Main Pass Energy Hub LLC must separately apply for and receive an authorization from FERC for the onshore pipeline, this EIS will assess the environmental impacts of both the onshore and offshore portions of the project. We have consulted with FERC and understand that the affiliate applied to FERC for onshore pipeline authorization under Docket Number CP04–374–000, CP04–375–000 and CP04–376–000. Therefore, we are publishing the notice of intent described in 40 CFR 1508.22, to announce our intention to prepare and consider an EIS, and to describe our proposed action and possible alternatives, describe the scoping process required by 40 CFR 1501.7, and provide contact information. All comments related to this project, including the onshore pipeline, may be submitted in accordance with the guidance under **ADDRESSES.** Contact information is provided above, under **FOR FURTHER INFORMATION CONTACT.**

The proposed action requiring environmental review is the Federal licensing of the Main Pass Energy Hub deepwater port application. The alternatives to licensing approval are licensing with conditions (including conditions designed to mitigate environmental impact), and denying the application, which for purposes of environmental review is the ''no-action'' alternative.

Public scoping is an early and open process for determining the scope of issues to be addressed in an EIS and for identifying the significant issues related to a proposed action. The scoping process begins with publication of this notice, extends through the public comment period (see **DATES**), and ends when the Coast Guard completes the following actions:

- Invites the participation of Federal, State, and local agencies, any affected Indian tribe, the applicant, and other interested persons;

• Determines the actions, alternatives, and impacts described in 40 CFR 1508.25;
• Identifies and eliminates from detailed study those issues that are not significant or that have been covered elsewhere;
• Allocates responsibility for preparing EIS components;
• Indicates any related environmental assessments or environmental impact statements that are not part of the EIS;
• Identifies other relevant environmental review and consultation requirements;
• Indicates the relationship between timing of the environmental review and other aspects of the application process; and,
• At its discretion, exercises options provided in 40 CFR 1501.7(b).

Once the scoping process is complete, the Coast Guard will prepare a draft EIS, and we will publish a **Federal Register** notice announcing its public availability. If you want to be mailed or emailed the draft EIS notice of availability, please contact the person named in **FOR FURTHER INFORMATION CONTACT.** We will provide the public with an opportunity to review and comment on the draft EIS. After the Coast Guard considers those comments, we will prepare the final EIS and similarly announce its availability and solicit public review and comment.

Dated: July 23, 2004.

Joseph J. Angelo,

Director of Standards, Marine Safety, Security, and Environmental Protection, U.S. Coast Guard.

H. Keith Lesnick,

Senior Transportation Specialist, Deepwater Ports Program Manager, U.S. Maritime Administration.

[FR Doc. 04–17207 Filed 7–28–04; 8:45 am]

BILLING CODE 4910–15–P

DEPARTMENT OF HOMELAND SECURITY

Coast Guard

[USCG–2004–18655]

Merchant Marine Personnel Advisory Committee

AGENCY: Coast Guard, DHS.

ACTION: Notice of meeting.

SUMMARY: A working group of the Merchant Marine Personnel Advisory Committee (MERPAC) will meet to discuss Task Statement #36 ''Recommendations on a Training and Assessment Program for Officer in Charge of an Engineering Watch Coming up Through the Hawsepipe.'' MERPAC advises the Secretary of Homeland Security on matters relating to the training, qualifications, licensing, certification, and fitness of seamen serving in the U.S. merchant marine. This meeting will be open to the public.

DATES: The MERPAC working group will meet on Tuesday, August 10, 2004, from 8:30 a.m. to 4 p.m. (local), and Wednesday, August 11, 2004, from 8:30 a.m. to noon (local). This meeting may adjourn early if all business is finished. Requests to make oral presentations should reach the Coast Guard on or before August 4, 2004. Written material and requests to have a copy of your material distributed to each member of the working group should reach the Coast Guard on or before August 4, 2004.

ADDRESSES: The working group of MERPAC will meet at the RTM Star Center, 2 West Dixie Highway, Dania Beach, FL 33004, Tel. (954) 921–7254. Send written material and requests to make oral presentations to Mr. Mark Gould, Commandant (G-MSO–1), U.S. Coast Guard Headquarters, 2100 Second Street, SW., Washington, DC 20593–0001. This notice is and related documents are available on the Internet at *http://dms.dot.gov* under Docket Number USCG–2004–18655.

FOR FURTHER INFORMATION CONTACT: For questions on this notice, contact Mr. Mark C. Gould, Assistant to the Executive Director, telephone (202) 267–6890, fax (202) 267–4570, or e-mail *mgould@comdt.uscg.mil* or Mr. Gerald Miante, Telephone (202) 267–0214 or e-mail *gmiante@comdt.uscg.mil.* Further directions regarding the location of the RTM Star Center may be found at: *http://www.star-center.com/STAR_Center/Dania%20Home.htm.*

SUPPLEMENTARY INFORMATION: Notice of this meeting is given under the Federal Advisory Committee Act, 5 U.S.C. App. 2 (Pub. L. 92–463, 86 Stat.770, as amended).

Agenda of August 10–11, 2004 Meeting: The working group will meet to discuss Task Statement #36 ''Recommendations on a Training Program for Officers in Charge of an Engineering Watch Coming up Through the Hawsepipe.'' The working group will develop a training program containing the minimum requirements for a U.S. license as Third Assistant Engineer, and STCW Certificate as Officer in Charge of an Engineering Watch on sea-going vessels under the International Convention on Standards of Training, Certification and Watchkeeping for Seafarers (STCW), as amended (available for purchase from the International Maritime Organization, 4 Albert Embankment, London SE1 7SR, England). At the end of the meeting, the working group will re-cap its discussions and prepare their program for the full committee to consider at its next meeting.

Procedural

This meeting is open to the public. Please note that the meeting may adjourn early if all business is finished. At the Chair's discretion, members of the public may make oral presentations during the meeting. If you would like to make an oral presentation at the meeting, please notify Mr. Gould or Mr. Miante no later than August 4, 2004. Written material for distribution at the meeting should reach the Coast Guard no later than August 4, 2004. If you would like a copy of your material distributed to each member of the committee or working group in advance of the meeting, please submit 25 copies to either Mr. Gould or Mr. Miante no later than August 4, 2004.

Information on Services for Individuals With Disabilities

For information on facilities or services for individuals with disabilities or to request special assistance at the meeting, contact Mr. Gould or Mr. Miante at the numbers listed in **FOR FURTHER INFORMATION CONTACT** as soon as possible.

Dated: July 22, 2004.

Joseph J. Angelo,

Director of Standards, Marine Safety, Security and Environmental Protection.

[FR Doc. 04–17267 Filed 7–28–04; 8:45 am]

BILLING CODE 4910–15–P

DEPARTMENT OF HOUSING AND URBAN DEVELOPMENT

[Docket No. FR–4903–N–56]

Notice of Submission of Proposed Information Collection to OMB; Annual Lead-Based Paint Activity Report

AGENCY: Office of the Chief Information Officer, HUD.

ACTION: Notice.

SUMMARY: The proposed information collection requirement described below has been submitted to the Office of Management and Budget (OMB) for review, as required by the Paperwork Reduction Act. The Department is soliciting public comments on the subject proposal.

Public housing agencies (PHAs) and tribally Designated Housing Entities (TDHEs) are required to maintain

records on tenant notification, testing and abatement activities. These agencies are also required to provide tenants and purchasers a copy of all positive lead-based paint test results. HUD needs the information to ensure statutory and regulatory compliance with the Lead-Based Paint Poisoning Prevention Act (LBPPPA). HUD reports the information to Congress as required by statute.

DATES: *Comments Due Date:* August 30, 2004.

ADDRESSES: Interested persons are invited to submit comments regarding this proposal. Comments should refer to the proposal by name and/or OMB approval Number (2577–0090) and should be sent to: HUD Desk Officer, Office of Management and Budget, New Executive Office Building, Washington, DC 20503; fax: (202) 395–6974.

FOR FURTHER INFORMATION CONTACT: Wayne Eddins, Reports Management Officer, AYO, Department of Housing and Urban Development, 451 Seventh Street, SW., Washington, DC 20410; e-mail *Wayne_Eddins@HUD.gov;* telephone (202) 708–2374. This is not a toll-free number. Copies of available documents submitted to OMB may be obtained from Mr. Eddins and at HUD's Web site at *http://www5.hud.gov:63001/po/i/icbts/collectionsearch.cfm.*

SUPPLEMENTARY INFORMATION: This Notice informs the public that the U.S. Department of Housing and Urban Development (HUD) has submitted to OMB, for emergency processing, a survey instrument to obtain information from faith based and community organizations on their likelihood and success at applying for various funding programs. This Notice is soliciting comments from members of the public and affecting agencies concerning the proposed collection of information to: (1) Evaluate whether the proposed collection of information is necessary for the proper performance of the functions of the agency, including whether the information will have practical utility; (2) Evaluate the accuracy of the agency's estimate of the burden of the proposed collection of information; (3) Enhance the quality, utility, and clarity of the information to be collected; and (4) Minimize the burden of the collection of information on those who are to respond; including through the use of appropriate automated collection techniques or other forms of information technology, *e.g.*, permitting electronic submission of responses.

This Notice also lists the following information:

Title of Proposal: Annual Lead-Based Paint Activity Report.

OMB Approval Number: 2577–0090.

Form Numbers: HUD–52850.

Description of the Need for the Information and Its Proposed Use: Public housing agencies (PHAs) and Tribally Designated Housing Entities (TDHEs) are required to maintain records on tenant notification, testing and abatement activities. These agencies are also required to provide tenants and purchasers a copy of all positive lead-based paint test results. HUD needs the information to ensure statutory and regulatory compliance with the Lead Based Paint Poisoning Prevention Act (LBPPPA). HUD reports the information to Congress as required by statue.

Frequency of Submission: Annually.

	Number of respondents	×	Annual responses	×	Hours per response	=	Burden hours
Reporting Burden	3,135	....	1	....	2	....	6,270

Total Estimated Burden Hours: 6,270.

Status: Extension of a currently approved collection.

Authority: Section 3507 of the Paperwork Reduction Act of 1995, 44 U.S.C. 35, as amended.

Dated: July 23, 2004.

Wayne Eddins,

Departmental Reports Management Officer, Office of the Chief Information Officer.

[FR Doc. 04–17321 Filed 7–28–04; 8:45 am]

BILLING CODE 4210–72–P

DEPARTMENT OF HOUSING AND URBAN DEVELOPMENT

[Docket No. FR–4903–N–57]

Notice of Submission of Proposed Information Collection to OMB; Application for Hospital Project Mortgage Insurance

AGENCY: Office of the Chief Information Officer, HUD.

ACTION: Notice.

SUMMARY: The proposed information collection requirement described below has been submitted to the Office of Management and Budget (OMB) for review, as required by the Paperwork Reduction Act. The Department is soliciting public comments on the subject proposal.

This is a request for renewal of approval to collect information necessary to determine the viability of a hospital applicant's proposal for mortgage insurance: basic eligibility criteria; underwriting standards; feasibility study; and adequacy of state and/or local certifications, approvals, or waivers.

DATES: *Comments Due Date:* August 30, 2004.

ADDRESSES: Interested persons are invited to submit comments regarding this proposal. Comments should refer to the proposal by name and/or OMB approval Number (2502–0518) and should be sent to: HUD Desk Officer, Office of Management and Budget, New Executive Office Building, Washington, DC 20503; fax: (202) 395–6974.

FOR FURTHER INFORMATION CONTACT: Wayne Eddins, Reports Management Officer, AYO, Department of Housing and Urban Development, 451 Seventh Street, SW., Washington, DC 20410; e-mail *Wayne_Eddins@HUD.gov;* telephone (202) 708–2374. This is not a toll-free number. Copies of available documents submitted to OMB may be obtained from Mr. Eddins and at HUD's Web site at *http://www5.hud.gov:63001/po/i/icbts/collectionsearch.cfm.*

SUPPLEMENTARY INFORMATION: This Notice informs the public that the U.S. Department of Housing and Urban Development (HUD) has submitted to OMB, for emergency processing, a survey instrument to obtain information from faith based and community organizations on their likelihood and success at applying for various funding programs. This Notice is soliciting comments from members of the public and affecting agencies concerning the proposed collection of information to: (1) Evaluate whether the proposed collection of information is necessary for the proper performance of the functions of the agency, including whether the information will have practical utility; (2) Evaluate the accuracy of the agency's estimate of the burden of the proposed collection of information; (3) Enhance the quality, utility, and clarity of the information to be collected; and (4) Minimize the burden of the collection of information on those who are to respond; including through the use of appropriate automated collection techniques or other forms of information technology,

e.g., permitting electronic submission of responses.

This Notice also lists the following information:

Title of Proposal: Application for Hospital Project Mortgage Insurance.

OMB Approval Number: 2502–0518.

Form Numbers: HUD–92013–HOSP.

Description of the Need for the Information and Its Proposed Use: This information is necessary to determine the viability of a hospital applicant's proposal for mortgage insurance: basic eligibility criteria; underwriting standards; feasibility study; and adequacy of State and/or local certifications, approvals, or waivers.

Frequency of Submission: On Occasion.

Reporting burden	Number of respondents	×	Annual responses	×	Hours per response	=	Burden hours
.....	18	....	1	....	960	....	17,280

Total Estimated Burden Hours: 17,280.

Status: Extension of a currently approved collection.

Authority: Section 3507 of the Paperwork Reduction Act of 1995, 44 U.S.C. 35, as amended.

Dated: July 23, 2004.

Wayne Eddins,

Departmental Reports Management Officer, Office of the Chief Information Officer.

[FR Doc. 04–17322 Filed 7–28–04; 8:45 am]

BILLING CODE 4210–72–P

DEPARTMENT OF THE INTERIOR

Fish and Wildlife Service

Information Collection Renewal to be Submitted to the Office of Management and Budget (OMB) for Approval Under the Paperwork Reduction Act; Experimental Populations; Endangered and Threatened Species

AGENCY: Fish and Wildlife Service, Interior.

ACTION: Notice; request for comments.

SUMMARY: The collection of information described below will be submitted to OMB for approval under the provisions of the Paperwork Reduction Act of 1995. Copies of specific information collection requirements, related forms and explanatory material may be obtained by contacting the Information Collection Clearance Officer of the U.S. Fish and Wildlife Service at the address and/or phone numbers listed below.

DATES: Consideration will be given to all comments received on or before September 27, 2004.

ADDRESSES: Send your comments on the information collection requirement via mail to the Information Collection Clearance Officer, U.S. Fish and Wildlife Service, 4401 North Fairfax Drive, Mail Stop 222–ARLSQ, Arlington, Virginia 22203; or via fax at (703) 358–2269; or via e-mail at *Hope_Grey@fws.gov.*

FOR FURTHER INFORMATION CONTACT: To request a copy of the proposed information collection requirement, related forms, or explanatory material, contact Hope Grey by telephone at (703) 358–2482 or by e-mail at *Hope_Grey@fws.gov.* You may also contact Elena Babij, Endangered Species Program, by telephone at (703) 358–2061 or by e-mail at *Eleanora_Babij@fws.gov.*

SUPPLEMENTARY INFORMATION: The Office of Management and Budget (OMB) regulations at 5 CFR 1320, which implement provisions of the Paperwork Reduction Act of 1995 (44 U.S.C. 3501 *et seq.*), require that interested members of the public and affected agencies have an opportunity to comment on information collection and recordkeeping activities (see 5 CFR 1320.8(d)). The U.S. Fish and Wildlife Service (Service or we) plans to submit a request to OMB to renew its existing approval of the collection of information for Experimental Populations, Endangered and Threatened Species, which expires on October 31, 2004. We are requesting a 3-year term of approval for this information collection activity.

Federal agencies may not conduct or sponsor, and a person is not required to respond to, a collection of information unless it displays a currently valid OMB control number. The OMB control number for this collection of information is 1018–0095.

Comments are invited on: (1) whether the collection of information is necessary for the proper performance of the functions of the agency, including whether the information will have practical utility; (2) the accuracy of the agency's estimate of burden, including the validity of the methodology and assumptions used; (3) ways to enhance the quality, utility, and clarity of the information on those who are to respond, including through the use of appropriate automated, electronic, mechanical, or other technological collection techniques or other forms of information technology; and (4) ways to minimize the burden of the collection of information on those who are to respond. The information collections in this program will not be part of a system of records covered by the Privacy Act (5 U.S.C. 552(a)).

Experimental populations established under section 10(j) of the Endangered Species Act of 1973, as amended (ESA), require information collection and reporting to the Service. Section 9 of the ESA describes prohibited acts involving threatened or endangered species (16 U.S.C. section 1538 (a)(1)(B)). There are three major categories of information collected under the already issued experimental population rules. To date, these categories have encompassed information relating to: (1) The general taking or removal of individuals of an experimental population, (2) the authorized taking of individuals related to reports of depredation on livestock or pets caused by individuals that are part of an experimental population, and (3) the collection of specimens or the recovery of dead animals that are part of an experimental population. These three categories have adequately described the types of information needed to evaluate the efficacy of the program and are expected to continue to accurately describe activities under the program.

Because individuals of designated experimental populations for species listed as threatened or endangered under the ESA are categorically protected, documentation of human-related mortalities, recovery of dead specimens and other types of take related to the status of experimental populations is important to the Service in order to monitor the success of reintroduction efforts, and recovery efforts in general. In order to minimize potential conflict with humans which could undermine recovery efforts, livestock depredations connected with experimental populations of listed species require prompt attention for purposes of determining the location, timing, and nature of the predatory behavior involved, accurate determination of the species responsible for a livestock kill, and the timely application of necessary control measures. The Service, in cooperation with the United States Department of Agriculture/Animal Plant Health

Inspection Service Division of Wildlife Services or other cooperating State or Federal agencies, relies on prompt public reporting of depredation in order to resolve livestock-related problems. Therefore, a time sensitive requirement for reporting problems (generally within 24 hours) to the appropriate Service office is necessary.

Information collection is achieved primarily by means of telephone calls by members of the public to Service offices specified in the individual rules (some may choose to use facsimile or electronic mail). Information required is limited to the identity of the caller, species involved, time and place of an incident, the type of incident, and circumstances related to the incident described. The vast majority of the information supplied to the Service as a result of experimental population regulations is provided by cooperating State and Federal agencies under cooperative agreement. However, some of the information collected by the Service under the experimental population rules is provided by the public.

The collected information can be separated into three categories: general take or removal, depredation-related take, and specimen collection. General take or removal information refers to human-related mortality including unintentional taking incidental to otherwise lawful activities (*e.g.* highway mortalities), take in defense of human life, take related to defense of property (if authorized), or take in the form of authorized harassment. Most contacts related to this type of information collection are in regard to sightings of experimental animals, or the inadvertent discovery of an injured or dead individual. Depredation-related take refers to the reporting of take for management purposes, where livestock depredation has been documented or may include authorized harassment or lethal take of experimental animals in the act of attacking livestock. The information collection required by the rules for this type of take include the necessary follow-up reports after the Service has authorized harassment or lethal take of experimental animals in relation to confirmed instances of livestock depredation or in defense of human life. Specimen collection is for the purpose of documenting incidental or authorized scientific collection. Most of the information collection requirement for this take pertains primarily to the reporting of sightings of experimental population animals or the inadvertent discovery of an injured or dead individual. Information collection is required for necessary follow-up reports when the Service has authorized take of experimental animals for specimen collection.

The standard information collection includes the name, address, and phone number of the reporting party, location and time of the reported incident, species of experimental population involved. Reporting parties include, but are not limited to, individuals or households, farms, businesses, and other non-profit organizations. The reporting of specimen collections, recovery, or even the reporting of dead individuals from experimental populations is important to the Service's efforts in monitoring these individuals and for other scientific purposes.

Because the number of reports generated annually by the general public (rather than cooperating agencies or separately permitted individuals) under these rules is extremely small (far less than one report per year, per rule) and to assure thorough documentation of results, the Service is estimating the number of expected reports to assume a maximum number per year based on allowance for increased population size and public awareness of experimental populations.

The several existing experimental populations described under Title 50 of the Code of Federal Regulations at part 17.84 contain information collection requirements. This information collection would also apply to any future experimental populations that become established that require the same types of reports as listed above to streamline the process.

Title of Collection: Endangered and Threatened Wildlife, 50 CFR 17.84, Experimental populations.

Description of respondents: Private individuals and households, businesses, not-for-profit organizations, and farms.

Bureau form number: N/A.

Frequency of collection: On occasion.

Burden Estimates for Reporting Requirements for Experimental Populations—Endangered and Threatened Species:

Type of report	Number of respondents	Average time required per report (minutes)	Total annual burden (hours)
General take or removal [a]	20	15	5
Depredation-related take [b]	22	15	5.5
Specimen collection [c]	20	15	5

[a] General take or removal includes human-related mortality including unintentional taking incidental to otherwise lawful activities (*e.g.* highway mortalities), take in defense of human life, take related to defense of property (if authorized) or take in the form of authorized harassment.

[b] Depredation-related take is take for management purposes where livestock depredation has been documented and may include authorized harassment or authorized lethal take of experimental animals in the act of attacking livestock.

[c] Specimen collection, recovery, or reporting of dead individuals from experimental populations for documentation purposes or authorized scientific collection purposes.

Dated: July 21, 2004.

Anissa Craghead,

Information Collection Clearance Officer, U.S. Fish and Wildlife Service.

[FR Doc. 04–17227 Filed 7–28–04; 8:45 am]

BILLING CODE 4310–55–P

DEPARTMENT OF THE INTERIOR

Fish and Wildlife Service

Issuance of Permits

AGENCY: Fish and Wildlife Service, Interior.

ACTION: Notice of issuance of permits for endangered species and/or marine mammals.

SUMMARY: The following permits were issued.

ADDRESSES: Documents and other information submitted with these applications are available for review, subject to the requirements of the

Privacy Act and Freedom of Information Act, by any party who submits a written request for a copy of such documents to: U.S. Fish and Wildlife Service, Division of Management Authority, 4401 North Fairfax Drive, Room 700, Arlington, Virginia 22203; fax 703/358–2281.

FOR FURTHER INFORMATION CONTACT: Division of Management Authority, telephone 703/358–2104.

SUPPLEMENTARY INFORMATION: Notice is hereby given that on the dates below, as authorized by the provisions of the Endangered Species Act of 1973, *as amended* (16 U.S.C. 1531, *et seq.*), and/or the Marine Mammal Protection Act of 1972, *as amended* (16 U.S.C. 1361 *et seq.*), the Fish and Wildlife Service issued the requested permit(s) subject to certain conditions set forth therein. For each permit for an endangered species, the Service found that (1) the application was filed in good faith, (2) the granted permit would not operate to the disadvantage of the endangered species, and (3) the granted permit would be consistent with the purposes and policy set forth in Section 2 of the Endangered Species Act of 1973, as amended.

Endangered Species

Permit number	Applicant	Receipt of application **Federal Register** notice	Permit issuance date
085896	John Penek	69 FR 30715; May 28, 2004	June 30, 2004.
085899	Wilfred P. Schmoe	69 FR 30715; May 28, 2004	June 30, 2004.
086968	James J. Liautaud	69 FR 30714; May 28, 2004	June 30, 2004.

Marine Mammals

Permit number	Applicant	Receipt of application **Federal Register** notice	Permit issuance date
084777	Michael A. Stahelin	69 FR 21858; April 22, 2004	June 30, 2004.
084805	Ernest J. Meinhardt	69 FR 21858; April 22, 2004	July 8, 2004.
085064	William B. Scott, Jr.	69 FR 21858; April 22, 2004	July 12, 2004.
085149	Paul C. Buechel	63 FR 21858; April 22, 2004	June 30, 2004.
086230	Jorge M. Rodriguez	69 FR 27947; May 17, 2004	July 12, 2004.
086231	Troy J. Perry	69 FR 27947; May 17, 2004	July 12, 2004.
086964	David W. Schubert	69 FR 30714; May 28, 2004	July 12, 2004.
086970	Nicholas T. Wienold	69 FR 30714; May 28, 2004	July 12, 2004.

Dated: July 16, 2004.

Monica Farris,

Senior Permit Biologist, Branch of Permits, Division of Management Authority.

[FR Doc. 04–17287 Filed 7–28–04; 8:45 am]

BILLING CODE 4310–55–P

DEPARTMENT OF THE INTERIOR

Fish and Wildlife Service

Receipt of Applications for Permit

AGENCY: Fish and Wildlife Service, Interior.

ACTION: Notice of receipt of applications for permit.

SUMMARY: The public is invited to comment on the following applications to conduct certain activities with endangered species and/or marine mammals.

DATES: Written data, comments or requests must be received by August 30, 2004.

ADDRESSES: Documents and other information submitted with these applications are available for review, subject to the requirements of the Privacy Act and Freedom of Information Act, by any party who submits a written request for a copy of such documents within 30 days of the date of publication of this notice to: U.S. Fish and Wildlife Service, Division of Management Authority, 4401 North Fairfax Drive, Room 700, Arlington, Virginia 22203; fax (703) 358–2281.

FOR FURTHER INFORMATION CONTACT: Division of Management Authority, telephone (703) 358–2104.

SUPPLEMENTARY INFORMATION:

Endangered Species

The public is invited to comment on the following applications for a permit to conduct certain activities with endangered species. This notice is provided pursuant to section 10(c) of the Endangered Species Act of 1973, *as amended* (16 U.S.C. 1531, *et seq.*). Written data, comments, or requests for copies of these complete applications should be submitted to the Director (address above).

Applicant: Jeffrey R. Powell, Yale University, New Haven, Connecticut, PRT–784934.

The applicant requests renewal of a permit to import biological samples from Galapagos tortoises *(Geochelone nigra)* collected in the wild in Ecuador, for scientific research. This notification covers activities to be conducted by the applicant over a five-year period.

Applicant: Peabody Museum of Natural History, Yale University, New Haven, CT, PRT–087972.

The applicant requests a permit to import biological samples from mouse lemurs *(Microcebus species)* collected in the wild in Madagascar, for scientific research. This notification covers activities to be conducted by the applicant over a five-year period.

Applicant: Fort Worth Zoological Park, Fort Worth, TX, PRT–088021.

The applicant requests a permit to import four jaguars *(Panthera onca)* from the Zoologico de Santa Cruz, Santa Cruz, Bolivia, for the purpose of enhancement of the survival of the species through captive propagation and conservation education.

Endangered Marine Mammals and Marine Mammals

The public is invited to comment on the following applications for a permit to conduct certain activities with endangered marine mammals and/or marine mammals. The applications were submitted to satisfy requirements

of the Endangered Species Act of 1973, *as amended* (16 U.S.C. 1531, *et seq.*) and/or the Marine Mammal Protection Act of 1972, *as amended* (16 U.S.C. 1361 *et seq.*), and the regulations governing endangered species (50 CFR part 17) and/or marine mammals (50 CFR part 18). Written data, comments, or requests for copies of the complete applications or requests for a public hearing on these applications should be submitted to the Director (address above). Anyone requesting a hearing should give specific reasons why a hearing would be appropriate. The holding of such a hearing is at the discretion of the Director.

Applicant: Museum of Vertebrate Zoology, UC Berkeley, Berkeley, CA, PRT–084858.

The applicant requests a permit to export a fragment of muscle tissue sample taken from a dead southern sea otter *(Enhydra lutris nereis)* specimen for the purpose of scientific research on the DNA nucleotide sequence variation in sea otters versus other mustelids for the purpose of understanding the importance of certain proteins in the adaptation to deep diving. This notification covers activities to be conducted by the applicant over a five-year period.

Applicant: U.S. Fish and Wildlife Service, Marine Mammals Management, Anchorage, AK, PRT–041309.

The applicant requests an amendment to their permit which currently authorizes aerial and/or skiff surveys of Northern sea otters *(Enhydra lutris lutris)* wherever they occur in the State of Alaska, that may result in Level B harassment, for the purpose of scientific research. The applicant requests an extension of those activities and also requests authorization to capture, take biological samples, mark, and release up to 100 animals per year for the purpose of scientific research to assess a wide variety of health parameters and body condition indices. This notification covers activities to be conducted by the applicant over a five-year period.

Concurrent with the publication of this notice in the **Federal Register**, the Division of Management Authority is forwarding copies of the above applications to the Marine Mammal Commission and the Committee of Scientific Advisors for their review.

Dated: July 9, 2004.

Michael S. Moore,

Senior Permit Biologist, Branch of Permits, Division of Management Authority.

[FR Doc. 04–17286 Filed 7–28–04; 8:45 am]

BILLING CODE 4310–55–P

DEPARTMENT OF THE INTERIOR

Bureau of Land Management

[OR–030–1020–XX–028H; HAG 04–0230]

Meeting Notice for the John Day/Snake Resource Advisory Council

AGENCY: Bureau of Land Management (BLM), Vale District, Interior.

ACTION: Meeting notice for the John Day/Snake Resource Advisory Council.

SUMMARY: The John Day/Snake Resource Advisory Council will meet on Tuesday, September 14, 2004, in the Fir and Cedar meeting rooms at the Malheur National Forest Office, 431 Patterson Bridge Road, John Day, Oregon 97845.

The meeting may include such topics as, Forest Service Weeds Plan. There will also be subcommittee updates on OHV, Noxious Weeds, Planning, Sage Grouse, and other matters as may reasonably come before the board.

There will be a field trip from approximately 8 a.m. to 2 p.m. on Wednesday, September 15, 2004, location to be determined at a later date. Any public that would like to join in the field trip will need to provide their own transportation.

The entire meeting is open to the public. For a copy of the information to be distributed to the Council members, please submit a written request to the Vale District Office 10 days prior to the meeting. Public comment is scheduled for 11 a.m. to 11:15 a.m., Pacific Time (PT) on September 14, 2004.

FOR FURTHER INFORMATION CONTACT: Additional information concerning the John Day/Snake Resource Advisory Council may be obtained from Peggy Diegan, Management Assistant/Webmaster, Vale District Office, 100 Oregon Street, Vale, OR 97918 (541) 473–3144, or email *Peggy_Diegan@or.blm.gov*.

Dated: July 22, 2004.

David R. Henderson,

District Manager.

[FR Doc. 04–17216 Filed 7–28–04; 8:45 am]

BILLING CODE 4310–33–P

DEPARTMENT OF THE INTERIOR

National Park Service

Notice of Availability

AGENCY: National Park Service, Interior.

SUMMARY: National Park Service (NPS) has prepared a Final Environmental Impact Statement (EIS) for Saratoga National Historical Park General Management Plan, which is now available from the NPS.

ADDRESSES: Requests for copies should be sent to Superintendent, Saratoga National Historical Park, 648 Route 32, Stillwater, New York 12170–1604.

FOR FURTHER INFORMATION CONTACT: Superintendent at (518) 664–9821.

SUPPLEMENTARY INFORMATION: The NPS prepared a Draft General Management Plan (GMP)/Draft EIS for Saratoga National Historical Park, New York, pursuant to section 102(c) of the National Environmental Policy Act of 1969. The draft was made available for public review for 60 days (January–March 2004) during which time the NPS distributed 2000 summaries of the draft plan and over 60 full versions of the draft. Both the summary and the full version were made available on the Web and at area libraries. A total of 32 comments were received and some 45 participants attended an open house. The consensus of the public comment period was that NPS is pursuing the correct path for the park in Alternative D, the preferred alternative. Comments from individuals and public agencies did not require NPS to add other alternatives, significantly alter existing alternatives, or make changes to the impact analysis of the effects of any alternative. Thus, an abbreviated format is used for the responses to comments in the Final EIS, in compliance with the 1978 implementing regulations (40 CFR 1503.4[c]) for the National Environmental Policy Act.

DATES: The Final EIS will be made available for a 30-day period, from August 2–September 2, 2004.

Dated: June 4, 2004.

Robert W. McIntosh,

Associate Regional Director, Planning & Partnerships, Northeast Region.

[FR Doc. 04–17252 Filed 7–28–04; 8:45 am]

BILLING CODE 4312–HY–P

DEPARTMENT OF THE INTERIOR

National Park Service

Notice of Termination of the Environmental Impact Statement for the Exit Glacier Area Plan

AGENCY: National Park Service, Interior.

SUMMARY: The NPS is terminating the Environmental Impact Statement (EIS) for the Exit Glacier Area Plan because it has determined an Environmental Assessment (EA) will suffice. A Notice of Intent to prepare the EIS for the Exit Glacier Area Plan was published July 27, 2001 (66 FR 39196). Preliminary analysis of alternatives showed there was no potential for significant impacts to park resources and values. Scoping

conducted for the draft EIS indicated less controversy than anticipated when the project was initiated. Furthermore, changes to the proposal, specifically, dropping the proposed alternative transportation system (shuttle bus), reduced the scope of this planning effort. For these reasons the NPS determined the proposal would not constitute a major federal action requiring an EIS.

In place of the EIS, the NPS has issued an environmental assessment (EA) that considers the following four alternatives and related impacts:

No-Action Alternative: Continue the present management direction as guided by the 1984 General Management Plan and the 1996 Development Concept Plan.

Preferred Alternative: Enhance the experience of viewing Exit Glacier, which is the main attraction of the area, and provide for additional non-motorized recreational opportunities.

Alternative A: Improve interpretation, education, and non-motorized recreation by increasing staff and developing programs rather than improving infrastructure.

Alternative B: Improve the infrastructure of the Exit Glacier area to accommodate a greater number of visitors and recreational activities year-round.

DATES: The EA was distributed for public comment in May 2004, and a decision will be made in June 2004.

FOR FURTHER INFORMATION CONTACT: Anne Castellina, Superintendent, Kenai Fjords National Park, P.O. Box 1727, Seward, AK 99664. Telephone (907) 224–7515.

Dated: June 2, 2004.

Kayci Cook Collins,

Alaska Desk Officer.

[FR Doc. 04–17250 Filed 7–28–04; 8:45 am]

BILLING CODE 4312–HY–P

DEPARTMENT OF THE INTERIOR

National Park Service

General Management Plan Amendment, Abbreviated Final Environmental Impact Statement, Green Spring Unit, Colonial National Historical Park, VA

AGENCY: National Park Service, Department of the Interior.

ACTION: Notice of Availability of a Record of Decision on the Abbreviated Final Environmental Impact Statement for the General Management Plan Amendment, Green Spring Unit, Colonial National Historical Park.

SUMMARY: Pursuant to section 102(2)(C) of the National Environmental Policy Act of 1969, Pub. L. 91–190, 83 Stat. 852, 853, codified as amended at 42 U.S.C. 4332(2)(C), the National Park Service announces the availability of the Record of Decision for the Final General Management Plan Amendment/ Abbreviated Final Environmental Impact Statement (Final GMPA/AEIS) for the Green Spring Unit, Colonial National Historical Park, Virginia. On March 31, 2004 National Park Service Regional Director, Northeast Region approved the Record of Decision for the project. As soon as practicable, the National Park Service will begin to implement the Selected Action, described as the Preferred Alternative in the Final GMPA/AEIS issued on September 12, 2003. The Selected Action describes a long-term approach to managing Green Spring and best accomplishes the statutory mission of the National Park Service to provide long-term protection of Green Spring's resources and values while allowing for high quality visitor use and enjoyment. Consistent with the park's mission, NPS policy, and other laws and regulations, this action will guide the development and management of the park over the next 15 to 20 years. The Selected Action incorporates various zoning and management prescriptions to ensure resource preservation and public enjoyment of the park. National Park Service and partners will develop first time interpretive, visitor, and management facilities and programs on the site in two stages: before and after completion of research and closure of Centerville Road. Stage One will focus on research, fieldwork and visitor programs with temporary, low-impact site development. Stage Two's primary site development features include combined Visitor Contact Station/ Archeological Support Facility, 17th Century landscape restoration, and interpretive media/devices. The Selected Action and 2 alternatives were analyzed in the Draft and Abbreviated Final Environmental Impact Statements. The full range of foreseeable environmental consequences was assessed, and appropriate mitigating measures were identified. The Selected Action will have both positive and negative impacts on the park's natural and cultural resources; however, most of the negative impacts will be minor and localized. The Selected Action also best accomplishes the stated purposes of the plan as described on pp.14 of the ''Purpose and Need for Action'', Final General Management Plan Amendment/ Abbreviated Final Environmental Impact Statement (Final GMPA/AEIS) for Colonial NHP, and park mission goals. Consequently, the Selected Action best addresses the conservation of values embodied in the Organic Act. The National Park Service has determined that implementation of the Selected Action, Alternative C of the Final General Management Plan Amendment/Abbreviated Final Environmental Impact Statement, will not constitute an impairment to Green Spring's resources and values. This conclusion is based on a thorough analysis of the environmental impacts described in the Draft GMPA/EIS and Final GMPA/AEIS, the public comments received, relevant scientific studies, and the professional judgment of the decision-maker guided by the 2001 edition of National Park Service Management Policies. Overall, the plan results in major benefits to park resources and values, opportunities for their enjoyment, and does not result in their impairment. The Record of Decision includes a statement of the decision made, synopses of other alternatives considered, the basis for the decision, a description of the environmentally preferable alternative, a finding on impairment of park resources and values, a listing of measures to minimize environmental harm, and an overview of public involvement in the decision-making process.

FOR FURTHER INFORMATION CONTACT: Superintendent, Colonial National Historical Park, Post Office Box 210, Yorktown, Virginia 23690 or by calling 757–898–2401 or via e-mail at *becky_eggleston@nps.gov*.

SUPPLEMENTARY INFORMATION: Copies of the Record of Decision may be obtained from the contact listed above.

Dated: May 13, 2004.

Alec Gould,

Superintendent, Colonial National Historical Park.

[FR Doc. 04–17251 Filed 7–28–04; 8:45 am]

BILLING CODE 4312–HY–P

DEPARTMENT OF THE INTERIOR

National Park Service

Notice of Realty Action: Boundary Revision at Fredericksburg and Spotsylvania County Battle Fields Memorial National Military Park

I. Pursuant to the Land and Water Conservation Fund Act, as amended (16 U.S.C. 4601–9(c)), the Secretary of the Interior is authorized to make minor revisions of the boundary of an area,

whenever he determines that to do so will contribute to, and is necessary for, the proper preservation, protection, interpretation, or management of the unit. A minor boundary revision of Fredericksburg and Spotsylvania County Battle Fields Memorial National Military Park is needed to include the following tracts of land:

Tract 01–135 is a 0.11 of an acre tract that is situated approximately 1200 feet westerly from the centerline of Lansdowne Valley Road aka Route 638. Tract 01–135 occupies a strategic location in interpreting the first battle of Fredericksburg in 1862. It is important for the park to preserve this ground so visitors can clearly understand how General Lee geographically changed a weak part of his defensive line.

Tract 01–157 is a 0.14 of an acre tract that is situated in an area known as Hazel Run approximately 600 feet westerly from US Route 1. Tract 01–157 is located in an area of the Fredericksburg Battle Fields that played a role in the outcome of both the first and second battles of Fredericksburg in 1862 and 1863. Reinforcements to General Lee used a road that went up the backside of an area across Tract 01–157. During the second battle wounded confederate soldiers sought shelter and medical attention at temporary field hospitals set up along an area of this proposed donation.

Tract 03–253 is a 0.49 area tract that is located 1200 feet from the north/east side of Route 3 aka Orange Turnpike, Tract 03–253 is part of the ''take-off'' area of one of the most significant battle actions of the entire Civil War. This is the area that Stonewall Jackson's now famous ''Flank Attack '' has become one of the best known military maneuvers in all American military history.

Tract 03–263 is a 10.89 acre tract currently located outside the boundary. Tract 03–263 is an uneconomic remnant of Tract 03–214. Tract 03–214 and Tract 03–263 must be acquired at the same time. Both tracts are adjacent to the intersection of Jackson Trail East and Brock Road, in the Chancellorsville Battle Fields unit of the park. General Thomas J. ''Stonewall'' Jackson's Corps marched along these roads. Jackson's Flank Mark and subsequent attack are among the best known events of all American military history. Acquisition of Tract 03–263 would provide additional protection of the Brock Road portion of the march, where no NPS protection currently exists.

Tract 04–199 consists of 0.18 of an acre of land and is located immediately adjacent to Jackson Trail West in the Wilderness Battle Fields unit of the park. Inclusion of this tract will permit the park to screen a new sub-division from visitors following this important road trace, and also eliminate an existing access to the same sub-division.

Detailed information concerning this exchange, and boundary revision, including precise legal descriptions, Land Protection Plans, environmental assessments and cultural reports are available at the following address:

Superintendent, Fredericksburg and Spotsylvania County Battle Fields Memorial Military Park, 120 Chatham Land, Fredericksburg, VA 22405.

Editorial note: This document was received at the Office of the Federal Register on July 21, 2004.

Dated: August 29, 2003.

Patricia Phelan,

Acting Regional Director, Northeast Region.

[FR Doc. 04–16992 Filed 7–28–04; 8:45 am]

BILLING CODE 4312–52–M

DEPARTMENT OF JUSTICE

Criminal Division; Agency Information Collection Activities: Proposed Collection; Comments Requested

ACTION: 30-Day notice of information collection under review: Exhibit B to Registration Statement (Foreign Agents).

The Department of Justice (DOJ), Criminal Division has submitted the following information collection request to the Office of Management and Budget (OMB) for review and approval in accordance with the procedures of the Paperwork Reduction Act of 1995. The proposed information collection is published to obtain comments from the public and affected agencies. This information collection was previously published in the **Federal Register** Volume 69, Number 83, on page 23535 on April 29, 2004, allowing for a 60-day comment period.

The purpose of this notice is to allow for an additional 30 days for public comment until August 30, 2004. This process is conducted in accordance with 5 CFR 1320.10.

Written comments and/or suggestions regarding the items contained in this notice, especially the estimated public burden and associated response time, should be directed to the Office of Management and Budget, Office of Information and Regulatory Affairs, Attention: Department of Justice Desk Officer, Washington, DC 20530. Additionally, comments may be submitted to OMB via facsimile to (202) 395–5806. Written comments and suggestions from the public and affected agencies concerning the proposed collection of information are encouraged. Your comments should address one or more of the following four points:

—Evaluate whether the proposed collection of information is necessary for the proper performance of the functions of the agency, including whether the information will have practical utility;

—Evaluate the accuracy of the agency's estimate of the burden of the proposed collection of information, including the validity of the methodology and assumptions used;

—Enhance the quality, utility, and clarity of the information to be collected; and

—Minimize the burden of the collection of information on those who are to respond, including through the use of appropriate automated, electronic, mechanical, or other technological collection techniques or other forms of information technology, *e.g.*, permitting electronic submission of responses.

Overview of this information collection:

(1) *Type of Information Collection:* Extension of currently approved collection.

(2) *Title of the Form/Collection:* Exhibit B to Registration Statement (Foreign Agents).

(3) *The agency form number and the applicable component of the Department sponsoring the collection:* Form CRM–155. Criminal Division, U.S. Department of Justice.

(4) *Affected public who will be asked or required to respond, as well as a brief abstract:* Primary: Business or other for-profit, Not-for-profit institutions, and individuals or households. The form is used to augment the registration statement of foreign agents as required by the provisions of the Foreign Agents Registration Act of 1938, as amended, 22 U.S.C. 611, *et seq.*, must set forth the agreement or understanding between the registrant and each of his foreign principals as well as the nature and method of performance of such agreement or understanding and the existing or proposed activities engaged in or to be engaged in, including political activities, by the registrant for the foreign principal, and must be filed within 10 days of the date a contract is made or when initial activity occurs, whichever is first.

(5) *An estimate of the total number of respondents and the amount of time estimated for an average respondent to respond:* The total estimated number of responses is 164 at approximately 20 minutes per response.

(6) *An estimate of the total public burden (in hours) associated with the collection:* The estimated total annual burden hours associated with this collection is 54.

If additional information is required contact: Brenda E. Dyer, Department Clearance Officer, United States Department of Justice, Justice Management Division, Policy and Planning Staff, Patrick Henry Building, 601 D Street, NW., Suite 1600, Washington, DC 20530.

Dated: July 23, 2004.

Brenda E. Dyer,

Department Clearance Officer, United States Department of Justice.

[FR Doc. 04–17261 Filed 7–28–04; 8:45 am]

BILLING CODE 4410–14–P

DEPARTMENT OF JUSTICE

Criminal Division; Agency Information Collection Activities: Proposed Collection; Comments Requested

Action: 30-Day Notice of Information Collection Under Review: Short-Form Registration Statement of Individuals (Foreign Agents).

The Department of Justice (DOJ), Criminal Division has submitted the following information collection request to the Office of Management and Budget (OMB) for review and approval in accordance with the procedures of the Paperwork Reduction Act of 1995. The proposed information collection is published to obtain comments from the public and affected agencies. This information collection was previously published in the **Federal Register** Volume 69, Number 62, on page 16952 on March 31, 2004, allowing for a 60 day comment period.

The purpose of this notice is to allow for an additional 30 days for public comment until August 30, 2004. This process is conducted in accordance with 5 CFR 1320.10.

Written comments and/or suggestions regarding the item contained in this notice, especially the estimated public burden and associated response time, should be directed to the Office of Management and Budget, Office of Information and Regulatory Affairs, Attention: Department of Justice Desk Officer, Washington, DC 20530. Additionally, comments may be submitted to OMB via facsimile to (202) 395–5806. Written comments and suggestions from the public and affected agencies concerning the proposed collection of information are encouraged. Your comments should address one or more of the following four points:

—Evaluate whether the proposed collection of information is necessary for the proper performance of the functions of the agency, including whether the information will have practical utility;

—Evaluate the accuracy of the agencies estimate of the burden of the proposed collection of information, including the validity of the methodology and assumptions used;

—Enhance the quality, utility, and clarity of the information to be collected; and

—Minimize the burden of the collection of information on those who are to respond, including through the use of appropriate automated, electronic, mechanical, or other technological collection techniques or other forms of information technology, *e.g.*, permitting electronic submission of responses.

Overview of this information collection:

(1) *Type of Information Collection:* Extension of currently approved information collection.

(2) *Title of the Form/Collection:* Short-form Registration Statement of Individuals (Foreign Agents).

(3) *The agency form number and the applicable component of the Department sponsoring the collection:* Form CRM–156. Criminal Division, U.S. Department of Justice.

(4) *Affected public who will be asked or required to respond, as well as a brief abstract:* Primary: Business or other for-profit, Not-for-profit institutions, and individuals or households. The form is used to register foreign agents as required under the provisions of the Foreign Agents Registration Act of 1938, as amended, 22 U.S.C. 611, *et seq.* Rule 202 of the Act requires that a partner, officer, director, associate, employee and agent of a registrant who engages directly in activity in furtherance of the interests of the foreign principal, in other than a clerical, secretarial, or in a related or similar capacity, file a short-form registration statement.

(5) *An estimate of the total number of respondents and the amount of time estimated for an average respondent to respond:* The estimated total number of respondents is 523 who will complete a response within 25 minutes.

(6) *An estimate of the total public burden (in hours) associated with the collection:* The estimated total public burden associated with this information collection is 224 hours annually.

If additional information is required contact: Brenda E. Dyer, Department Clearance Officer, United States Department of Justice, Justice Management Division, Policy and Planning Staff, Patrick Henry Building, 601 D Street, NW., Suite 1600, Washington, DC 20530.

Dated: July 23, 2004.

Brenda E. Dyer,

Department Clearance Officer, United States Department of Justice.

[FR Doc. 04–17262 Filed 7–28–04; 8:45 am]

BILLING CODE 4410–14–P

DEPARTMENT OF JUSTICE

Membership of the Senior Executive Service Standing Performance Review Boards

AGENCY: Department of Justice.

ACTION: Notice of Department of Justice's standing members of the Senior Executive Service Performance Review Boards.

SUMMARY: Pursuant to the requirements of 5 U.S.C. 4314(c)(4), the Department of Justice announces the membership of its Senior Executive Service (SES) Standing Performance Review Boards (PRBs). The purpose of the PRBs is to provide fair and impartial review of SES performance appraisals, bonus recommendations and pay adjustments. The PRBs will make recommendations regarding the final performance ratings to be assigned, SES bonuses and/or pay adjustments to be awarded.

FOR FURTHER INFORMATION CONTACT: Debra M. Tomchek, Director, Personnel Staff, Justice Management Division, Department of Justice, Washington, DC 20530; (202) 514–6788.

Department of Justice, Senior Executive Service Performance Review Board Members

Alcohol, Tobacco, Firearms, and Explosives

Hugo Barrera, Deputy Assistant Director—Field Operations
Michael R. Bouchard, Assistant Director (Field Operations)
Donnie Carter, Division Director, SAC, Houston
James M. Cavanaugh, Director, Nashville Field Division
Richard Chase, Assistant Director (Inspection)
Linda Cureton, Deputy Asst. Director (Science & Technology)
Edgar Domenech, Asst. Director (Liaison and Public Information)
Michael Ethridge, Director, Laboratory Services
Wilfred Ford, SAC Detroit
Donald Kincaid, Division Director, SAC, Los Angeles
Imelda Koett, Associate Chief Counsel (Litigation)

Mark Logan, AD (Training & Professional Development)
Eleanor Loos, Associate Chief Counsel (Admin & Ethics)
John Malone, Division Director, SAC, Washington
Steve Mathis, Deputy Assistant Director (Training & Prof. Dev.)
Candace Moberly, Deputy Asst. Director (Management)
Marguerite Moccia, Assistant Director (Science & Technology)
Walfred Nelson, Dep. Asst. Dir. (Criminal Enforcement Field Ops)
Virginia O'Brien, Deputy Assistant Director (Recruitment & Hiring)
Lewis P. Raden, Assistant Director (Firearms, Explosives & Arson)
Jeffrey Roehm, Deputy Assistant Director (Inspection)
Stephen Rubenstein, Chief Counsel
Melanie Stinnett, Deputy Chief Counsel
James D. Webb, Deputy Assistant Director (Field Office East)
James Zammillo, Deputy Assistant Director (Industrial Ops)

Antitrust Division

Robert E. Connolly, Chief, Philadelphia Field Office
Norman Familant, Chief, Economic Litigation Section
Roger W. Fones, Chief, Transportation/Energy/Agriculture
Ralph T. Giordano, Chief, New York Field Office
Nancy M. Goodman, Chief, Computers & Finance Section
James M. Griffin, Deputy Assistant Attorney General
Scott D. Hammond, Senior Litigator
Edward T. Hand, Chief, Foreign Commerce Section
Kenneth Heyer, Chief, Competition Policy Section
Thoms D. King, Executive Officer
J. Robert Kramer II, Director of Operations
Gail Kursh, Chief, Professions & Intellectual Property
Catherine G. O'Sullivan, Chief, Appellate Section
Marvin N. Price, Jr., Chief, Chicago Field Office
George A. Rozanski, Chief, Economic Regulatory Section
Scott M. Watson, Chief, Cleveland Field Office

Bureau of Prisons

Jose Barron, Jr., Correctional Institution Administrator
Arthur F. Beeler, Jr., Correctional Institution Administrator
Michael L. Benov, Correctional Institution Administrator
Robin L. Beusse, Budget Officer
Joe W. Booker, Jr., Correctional Institution Administrator
Dennis M. Callahan, Correctional Institution Administrator
Joyce K. Conley, Deputy Assistant Director, Administration Division
Randy J. Davis, Correctional Institution Administrator
Charles J. DeRosa, Correctional Institution Administrator
D. Scott Dodrill, Regional Director, Northeast Region
Danny L. Dove, Correctional Institution Administrator
Bernie D. Ellis, Correctional Institution Administrator
Lester E. Fleming, Correctional Institution Administrator
Eddie J. Gallegos, Correctional Institution Administrator
Michael W. Garrett, Assistant Director, Program Review Division
Joseph E. Gunja, Regional Director, Western Region
John C. Hardwick, Deputy Assistant Director, Information, Policy & Public Affairs
Keith E. Hall, Assistant Director, Human Resource Management Division
Billy R. Hedrick, Correctional Institution Administrator
Gregory L. Hershberger, Regional Director, North Central Region
Carlyle I. Holder, Correctional Institution Administrator
Raymond E. Holt, Regional Director, Southeast Region
Robert A. Hood, Correctional Institution Administrator
Martha L. Jordan, Correctional Institution Administrator
Winfred J. Jusino, Correctional Institution Administrator
Thomas R. Kane, Assistant Director, Information, Policy & Public Affairs
Paul F. Kendall, Attorney Advisor General
John J. Lamanna, Correctional Institution Administrator
Whitney I. LeBlanc, Jr., Correctional Institution Administrator
Robert E. McFadden, Correctional Institution Administrator
Fredrick Menifee, Correctional Institution Administrator
Robert D. Miles, Correctional Institution Administrator
Marvin D. Morrison, Correctional Institution Administrator
Michael K. Nalley, Correctional Institution Administrator
Robert J. Newport, Deputy Assistant Director, Administration Division
Keith E. Olson, Correctional Institution Administrator
Thomas C. Peterson, Correctional Institution Administrator
Constance N. Reese, Correctional Institution Administrator
Bruce K. Sasser, Assistant Director, Administration Division
Paul M. Schultz, Correctional Institution Administrator
Steven B. Schwalb, Assistant Director, UNICOR
James E. Slade, Correctional Institution Administrator
Joseph V. Smith, Correctional Institution Administrator
Richard L. Stiff, Correctional Institution Administrator
Ronald G. Thompson, Regional Director, South Central Region
Maryellen Thoms, Assistant Director, Health Services Division
John M. Vanyur, Assistant Director, Correctional Programs Division
Monica S. Wetzel, Correctional Institution Administrator
Kim M. White, Regional Director, MidAtlantic Region
Ronnie Wiley, Correctional Institution Administrator
Troy W. Williamson, Correctional Institution Administrator
David L. Winn, Correctional Institution Administrator
Joseph P. Young, Correctional Institution Administrator
Michael A. Zenk, Correctional Institution Administrator

Civil Division

Gary W. Allen, Branch Director (Torts)
Felix V. Baxter, Branch Director (Federal Programs)
Joann J. Bordeaux, Deputy Branch Director
James G. Bruen Jr., Special Litigation Counsel, Commercial Litigation Branch
David M. Cohen, Branch Director (Commercial)
Anthony J. Coppolino, Special Litigation Counsel
Jeanne E. Davidson, Deputy Branch Director
Sharon Y. Eubanks, Branch Director (Tobacco Litigation)
John L. Euler, Deputy Branch Director
Timothy P. Garren, Branch Director (Torts)
Vincent M. Garvey, Deputy Branch Director
John P. Glynn, Branch Director (Torts)
Michael F. Hertz, Branch Director (Commercial Litigation)
Robert M. Hollis, Special Litigation Counsel (Foreign Litigation)
Joseph H. Hunt, Branch Director (Federal Programs)
Thomas W. Hussey, Director, Office of Immigration Litigation
William G. Kanter, Deputy Director Appellate Staff
James M. Kinsella, Deputy Director, Commercial Litigation Branch
David J. Kline, Deputy Director
J. Christopher Kohn, Branch Director (Commercial)

Robert E. Kopp, Director, Appellate Staff
Douglas N. Letter, Appellate Litigation Counsel
Sheila M. Lieber, Deputy Branch Director
Barbara B. O'Malley, Special Litigation Counsel
Phyllis J. Pyles, Branch Director (Torts)
Jennifer D. Rivera, Branch Director (Federal Programs)
Sandra P. Spooner, Deputy Branch Director (Commercial Litigation)
Mark B. Stern, Appellate Litigation Counsel
Eugene M. Thirolf, Director, Office of Consumer Litigation
Kenneth L. Zwick, Director of Management Programs

Civil Rights Division

Katherine A. Baldwin, Deputy Special Counsel, Immig. Related Unfair Employ. Pract.
Shanetta Y. Brown Cutlar, Chief, Special Litigation Section
David K. Flynn, Chief, Appellate Section
Merrily A. Friedlander, Chief, Coordination & Review Section
Jeremiah Glassman, Chief, Educational Opportunities Section
Irva D. Greene, Executive Officer
Elizabeth Johnson, Deputy Chief, Special Litigation Section
Joan A. Magagna, Deputy Section Chief, Disability Rights Section
Albert N. Moskowitz, Chief, Criminal Section
Joseph D. Rich, Chief, Voting Section
Steven H. Rosenbaum, Chief, Housing and Civil Enforcement Section
John L. Wodatch, Chief, Environmental Enforcement Section
William R. Yeomans, Deputy Chief, Criminal Division

Criminal Division

Carl Alexandre, Director, OPDAT
Jodi L. Avergun, Chief, Narcotics & Dangerous Drug Section
Ronnie L. Edelman, Deputy Chief, Terrorism & Violent Crimes Section
Joseph E. Gangloff, Deputy Chief, Public Integrity Section
John J. Dion, Chief, Internal Security Section
Sidney Glazer, Senior Appellate Counsel
Stuart M. Goldberg, Deputy Chief for Litigation Public Integrity
Noel L. Hillman, Chief, Public Integrity Section
Joshua R. Hochberg, Chief, Fraud Section
Joseph M. Jones, Chief, International Training/Development Program
Maureen H. Killion, Director, Office of Enforcement Operations
Teresa L. McHenry, Chief, Domestic Security Section
Bruce G. Ohr, Chief, Organized Crime & Racketeering Section
Catherine M. Oneil, Director, Organized Crime Drug Enforcement Task Forces
Andrew Oosterbaan, Chief, Child Exploitation and Obscenity Section
Steven J. Parent, Executive Director
Lee J. Radek, Senior Counsel to the Director
James S. Reynolds, Senior Counsel to the Asst. Attorney General
Mark M. Richard, Senior Counsel
Richard M. Rogers, Senior Counsel to the Assistant Attorney General
Eli M. Rosenbaum, Director, Office of Special Investigations
John R. Roth, Chief, Asset Forfeiture & Money Laundering Section
Barry M. Sabin, Chief, Terrorism & Violent Crimes Section
Julie E. Samuels, Director, Office of Policy & Management Analysis
Thomas G. Snow, Deputy Director, Office of International Affairs
Martha J. Stansell Gamm, Chief, Computer Crime & Intellectual Property Section
Patty M. Stemler, Chief, Appellate Section
Carol M. Wilkinson, Principal Deputy Chief, Narc. & Dangerous Drugs Section

Environmental and Natural Resources Division

Samuel C. Alexander, Chief, Indian Resources Section
Robert L. Bruffy, Executive Officer
Virginia P. Butler, Chief, Land Acquisition Section
Fred R. Disheroon, Sr. Special Litigation Counsel-Attorney Examiner
W. Benjamin Fisherow, Deputy Chief, Environmental Enforcement Section
Bruce S. Gelber, Deputy Chief, Environmental Enforcement Section
Letitia J. Grishaw, Chief, Environmental Defense Section
Kevin Haugrud, Chief, General Litigation Section
James C. Kilbourne, Chief, Appellate Section
Joel H. Meshorer, Special Litigation Counsel
Pauline H. Milius, Chief, Policy, Legislation & Spec. Litigation Section
Howard P. Stewart, Senior Litigation Counsel
David M. Uhlmann, Chief, Environmental Crimes Section
Jean E. Williams, Chief, Wildlife & Marine Resources Section

Executive Office for Immigration Review

Charles K. Adkins Blanch, General Counsel
Michael J. Creppy, Chief Immigration Judge
Jack Perkins, Chief Administrative Hearing Officer
Lori L. Scialabba, Chair, Board of Immigration Appeals

Executive Office for United States Trustees

Jeffrey M. Miller, Deputy Director
Clifford J. White III, Deputy Director

Justice Management Division

Linda A. Cinciotta, Sr. Counsel for Alternative Dispute Resolution
Ronald L. Deacon, Director, Facilities Administrative Services Staff
Louis Defalaise, Director, Office of Attorney Personnel Management
Blane K. Dessy, Director, Library Staff
Michael D. Duffy, Director, Telecommunication Services Staff
James L. Dunlap, Director, Security & Emergency Planning Staff
Stuart Frisch, General Counsel
Kathleen A. Haggerty, Director, Debt Collection Management
Dennis J. Heretick, IT Security Project Manager
James W. Johnston, Director, Procurement Services Staff
Jolene A. Lauria Sullens, Director, Budget Staff
Justin R. Linsey, IT Policy and Planning Manager
Theodius McBurrows, Director, Equal Employment Opportunity Staff
John W. Murray, Information Technology Project Manager
David M. Orr, Director, Management & Planning Staff
Michael A. Perez, Associate Director for Finance Management
James E. Price, Director, Computer Services Staff
Walter H. Schultz Jr., Deputy Director, Budget Staff
Debra M. Tomchek, Director, Human Resources

Office of Intelligence Policy and Review

Mark A. Bradley, Deputy Counsel for Intelligence Policy
Margaret A. Skelly Nolen, Deputy Counsel for Intelligence Operations

Office of Justice Programs

Betty M. Chemers, Chief, Evaluation Division
Mark D. Epley, Chief of Staff
Dennis E. Greenhouse, Policy Director
Nelson Hernandez, Director, Community Capacity Development
Carolyn A. Hightower, Program Manager
Harri J. Kramer, Deputy Director for Policy and Management
Rafael A. Madan, General Counsel
John S. Morgan, Assistant Director
Marilyn M. Roberts, Special Advisor
Cynthia J. Schwiner, Comptroller
Nancy L. Segerdahl, Director of Communications
Gary N. Silver, Director of Administration

John J. Wilson, Senior Counsel
David L. Zeppieri, Chief Information Officer

Office of Legal Counsel

Paul P. Colborn, Special Counsel
Daniel L. Koffsky, Special Counsel

Office of Professional Responsibility

Judith E. Wish, Deputy Counsel on Prof Responsibility

Tax Division

Ronald A. Cimino, Chief, Western Region
Stephen J. Csontos, Special Litigation Counsel
John A. Dicicco, Chief, Office of Review
Dennis M. Donohue, Senior Litigation Counsel
Seth G. Heald, Chief, Civil Trial Section, CR
David A. Hubbert, Chief, Civil Trial Section, Eastern Region
Louise P. Hytken, Chief, Civil Trial Section, Southwestern-Region
Michael J. Kearns, Chief, Civil Trial Section-Southern Region
Robert E. Lindsay, Director, Office of Policy & Tax Enforcement
Daniel P. Mullarkey, Chief, Civil Trial Section-North Region
Rosemary E. Paguni, Chief, Criminal Enforcement Section-North Region
Mildred L. Seidman, Chief, Claims Court Section
Robert S. Watkins, Chief, Civil Trial Section-Western Region
Joseph E. Young, Executive Officer
Thomas E. Zehnle, Chief, Criminal Enforcement Section-South Region

United States Marshals Service

Gerald M. Auerbach, General Counsel
Broadine M. Brown, Assistant Director for Management & Budget
Edward Dolan, Chief Financial Officer
Robert J. Finan II, Assistant Director for Investigative Services
Sylvester E. Jones, Assistant Director for Prisoners Service
Gary E. Mead, Assistant Director for Business Services
Michael A. Pearson, Assistant Director for Executive Service
Kenneth L. Pekarek, Assistant Director for JPATS
Arthur D. Roderick, Jr., Assistant Director for Operations Support
Suzanne D. Smith, Assistant Director of Human Resources

Valerie M. Willis,

Executive Secretary, Senior Executive Resources Board.

[FR Doc. 04–17231 Filed 7–28–04; 8:45 am]

BILLING CODE 4410–AR–M

NATIONAL AERONAUTICS AND SPACE ADMINISTRATION

[Notice 04–092]

National Environmental Policy Act; Outrigger Telescopes Project

AGENCY: National Aeronautics and Space Administration (NASA).

ACTION: Notice of availability of the Draft Environmental Impact Statement (EIS) for the Outrigger Telescopes Project.

SUMMARY: Pursuant to the National Environmental Policy Act of 1969, as amended (NEPA) (42 U.S.C. 4321 *et seq.*), the Council on Environmental Quality Regulations for Implementing the Procedural Provisions of NEPA (40 CFR parts 1500–1508), and NASA policy and procedures (14 CFR part 1216, subpart 1216.3), NASA has prepared and issued a Draft EIS for the proposed Outrigger Telescopes Project. NASA proposes to fund the Outrigger Telescopes Project at the W.M. Keck Observatory within the Mauna Kea Science Reserve on the summit of Mauna Kea, Island of Hawai'i. The Draft EIS addresses alternative sites and the environmental impacts that could potentially occur with on-site construction, installation, and operation of four, and possibly up to six, Outrigger Telescopes. The proposed Outrigger Telescopes would be strategically placed around the existing Keck I and Keck II Telescopes, within the current footprint of W.M. Keck Observatory. A reasonable alternative site has been identified on La Palma, Canary Islands, Spain.

DATES: Written comments on the Draft EIS must be received by NASA no later than September 30, 2004, or 45 days from the date of publication in the **Federal Register** of the U.S. Environmental Protection Agency notice of availability of the Draft EIS for the Outrigger Telescopes Project, whichever is later.

ADDRESSES: Written comments should be addressed to Dr. Carl B. Pilcher, Office of Space Science, Code SZ, NASA Headquarters, 300 E Street, SW., Washington, DC 20546–0001. Although hardcopy comments are preferred, comments may be sent by electronic mail to Dr. Carl B. Pilcher at *otpeis@nasa.gov* or by facsimile at 202–358–3096.

1. NASA has sent a hard copy of the Draft EIS to each library within the Hawai'i State Public Library System and to Regional Libraries. Specific addresses for Hawai'i State and Regional libraries can be found in the appropriate telephone directory and online at *http://www.librarieshawaii.org/locations/index.htm*.

2. Hard copies of the Draft EIS have been sent to selected California State Public Libraries. *See* **SUPPLEMENTARY INFORMATION** for their addresses.

3. The Draft EIS also may be reviewed at NASA Headquarters, NASA Centers, and the Hawai'i Legislative Reference Bureau. *See* **SUPPLEMENTARY INFORMATION** for their addresses.

Limited hard copies of the Draft EIS are available by contacting Dr. Carl B. Pilcher at the address or telephone number indicated below. The Draft EIS is also available in Acrobat® format at *http://www2.keck.hawaii.edu/*.

FOR FURTHER INFORMATION CONTACT: Dr. Carl B. Pilcher, Office of Space Science, Code SZ, NASA Headquarters, 300 E Street, SW., Washington, DC 20546–0001; telephone 877–283–1977 (toll-free), electronic mail *otpeis@nasa.gov*, or facsimile 202–358–3096.

SUPPLEMENTARY INFORMATION: The Outrigger Telescopes Project is a key element in NASA's Origins Program. The Origins Program addresses two fundamental questions: (1) How do galaxies, stars, and planets form? (*i.e.*, ''Where do we come from?''); and (2) Are there planets, aside from ours, that have the conditions necessary to support life? (*i.e.*, ''Are we alone?''). The Outrigger Telescopes Project has four scientific objectives that contribute to achieving the goals of the Origins Program:

1. Detect the astrometric signature (*i.e.*, the wobble of a star due to the gravitational influence of an unseen planetary companion) of planets as small as Uranus.

2. Make images of proto-stellar disks (*i.e.*, disks of dust and gas in space believed to be an early stage of star formation) and stellar debris disks (*i.e.*, clouds of gas or other material remaining after the star is formed).

3. Provide high-resolution information about some faint objects outside our galaxy.

4. Make high-resolution observations of objects within the solar system, including asteroids, comets, and outer planets.

The first of these four objectives can be accomplished by linking the Outrigger Telescopes together as an interferometer. An interferometer combines the light from two or more separate telescopes so that they act as a single large telescope. The last three objectives require that the Outrigger Telescopes be linked as an interferometer to at least one 8-meter (m) (26-feet (ft)) or larger telescope.

NASA proposes to fund the Outrigger Telescopes Project at the W.M. Keck Observatory site located within the Astronomy Precinct in the Mauna Kea Science Reserve on the summit of Mauna Kea, Island of Hawai'i. The W.M. Keck Observatory is the site of the two largest optical telescopes in the world—the twin 10-m (33-ft) Keck I and Keck II. The Outrigger Telescopes Project, if fully implemented as proposed, would consist of up to six 1.8-m (6-ft) telescopes placed strategically around the two existing Keck Telescopes.

The California Association for Research in Astronomy, a non-profit corporation established by the University of California and California Institute of Technology, operates and maintains the W.M. Keck Observatory. The W.M. Keck Observatory site (approximately 2-hectare (ha) (5-acre (ac))) is located within the Astronomy Precinct and is subleased to the California Institute of Technology by the University of Hawai'i. The Astronomy Precinct encompasses approximately 212 ha (525 ac) of the Mauna Kea Science Reserve (4,568 ha (11,288 ac)). The Mauna Kea Science Reserve is leased to the University of Hawai'i by the State of Hawai'i.

Due to present funding constraints, only four Outrigger Telescopes would initially be installed and operated, although the foundations for six would be constructed. It is anticipated that the on-site construction and installation of four of the six Outrigger Telescopes, along with on-site construction of the underground structures for Telescopes 5 and 6, would begin in 2005, with initial operations anticipated in 2007. If funding were available, the aboveground construction and installation of Telescopes 5 and 6 would likely begin no earlier than 2007. In addition to the W.M. Keck Observatory site, alternative sites with at least one existing 8-m (26-ft) or larger telescope are considered in the Draft EIS. The Gran Telescopio Canarias site at the Roque de los Muchachos Observatory on La Palma, one of the Canary Islands, Spain meets the criteria to be considered as a reasonable alternative site.

If NASA cannot or decides not to implement the Outrigger Telescopes Project at the W.M. Keck Observatory site or at the reasonable alternative site in the Canary Islands, NASA would consider sites where at least the one objective that does not require a large telescope (*i.e.*, detect the astrometric signature of planets as small as Uranus) can be achieved. Such reduced science sites considered in the Draft EIS include the Mount Wilson Observatory in Los Angeles County, California and the Mount Palomar Observatory in northern San Diego County, California. The Draft EIS also addresses the No Action alternative.

The Draft EIS analyzes the potential environmental impacts associated with the on-site construction, installation, and operation of the Outrigger Telescopes at the W.M. Keck Observatory site and at the reasonable alternative site. The potential environmental impacts at the reduced science sites are also evaluated. Environmental issues emphasized include, but are not necessarily limited to, cultural resources, flora and fauna, sewage and hydrology, hazardous materials, and cumulative impacts.

Hard copies of the Draft EIS have been sent to the following California State Public Libraries:

(a) La Cañada Flintridge Library, 4545 North Oakwood Avenue, La Cañada Flintridge, CA 91011;

(b) Pasadena Central Library, 285 E. Walnut Street, Pasadena, CA 91101;

(c) Altadena Main Library, 600 East Mariposa St., Altadena, CA 91001;

(d) San Diego County Library—Vista Branch, 700 Eucalyptus Avenue, Vista, CA 92084;

(e) Escondido Public Library, 239 South Kalmia Street, Escondido, CA 92025.

The Draft EIS also may be reviewed at the following locations:

(a) NASA Headquarters, Library, Room 1J20, 300 E Street, SW., Washington, DC 20546–0001;

(b) Jet Propulsion Laboratory, Visitors Lobby, Building 249, 4800 Oak Grove Drive, Pasadena, CA 91109;

(c) Legislative Reference Bureau, Room 004, State Capitol, Honolulu, HI.

In addition, the Draft EIS may be examined at the following NASA locations by contacting the pertinent Freedom of Information Act Office:

(a) NASA, Ames Research Center, Moffett Field, CA 94035 (650–604–1181);

(b) NASA, Dryden Flight Research Center, Edwards, CA 93523 (661–276–2704);

(c) NASA, Glenn Research Center, 21000 Brookpark Road, Cleveland, OH 44135 (216–433–2755);

(d) NASA, Goddard Space Flight Center, Greenbelt, MD 20771 (301–286–6255);

(e) NASA, Johnson Space Center, Houston, TX 77058 (281–483–8612);

(f) NASA, Kennedy Space Center, FL 32899 (321–867–9280);

(g) NASA, Langley Research Center, Hampton, VA 23681 (757–864–2497);

(h) NASA, Marshall Space Flight Center, Huntsville, AL 35812 (256–544–1837);

(i) NASA, John C. Stennis Space Center, MS 39529 (228–688–2164).

NASA welcomes and requests public comments and concerns regarding the Proposed Action, alternatives, and associated environmental issues. NASA is holding public meetings to provide an opportunity for the people of Hawai'i to comment in person on the Draft EIS. Public meetings will be held at the following locations:

- August 23, 2004, King Kamehameha Beach Hotel; 75–5660 Palani Road, Kailua-Kona, HI 96740 (free parking);
- August 25, 2004, Naniloa Hotel; 93 Banyan Drive, Hilo, HI 96720 (free parking);
- August 26, 2004, Waikoloa Beach Marriott; 69–275 Waikoloa Beach Drive, Waikoloa, HI 96738–5711 (free parking);
- August 30, 2004, Maui Arts & Cultural Center; One Cameron Way, Kahului, HI 96732 (free parking);
- September 1, 2004, Wai'anae District Park; 85–601 Farrington Highway, Wai'anae, HI 96792 (free parking);
- September 2, 2004, Japanese Cultural Center; 2554 South Beretania Street, Honolulu, HI 96826 (free parking).

All meetings will begin with an informal Open House from 5:45 to 6:15 p.m. The formal meeting to receive public comments will begin at 6:15 p.m. NASA plans to videotape and have a Hawaiian language translator at each meeting. To help ensure that oral comments are correctly captured, if possible, speakers should provide NASA with a written supporting statement. NASA will also consider conducting public meetings near alternative sites on the United States mainland, including the Mount Wilson and Palomar Mountain sites, if there is sufficient public environmental interest and concern.

Persons, organizations, or other parties who wish to receive a written copy of NASA's Record of Decision issued pursuant to this NEPA process should so indicate to Dr. Carl B. Pilcher at the addresses provided above.

Written public input and comments on alternatives and environmental issues and concerns associated with the Outrigger Telescopes Project are hereby requested. Written comments will be reproduced to the extent practical and specifically responded to in the Final EIS. Oral presentations at the public comment meetings that are unsupported by written statements will be

summarized by NASA and addressed in the Final EIS.

Olga M. Dominguez,

Deputy Assistant Administrator for Institutional and Corporate Management.

[FR Doc. 04–17264 Filed 7–28–04; 8:45 am]

BILLING CODE 7510–01–P

NATIONAL AERONAUTICS AND SPACE ADMINISTRATION

[Notice 04–093]

Government-Owned Inventions, Available for Licensing

AGENCY: National Aeronautics and Space Administration.

ACTION: Notice of prospective patent license.

SUMMARY: NASA hereby gives notice that Phoenix Systems International, Inc. of McDonald, OH, has applied for an exclusive worldwide (excluding the United States) license to practice the invention described and claimed in PCT Case No. KSC–12518–2–PCT entitled ''Hydrogen Peroxide Catalytic Decomposition,'' which is assigned to the United States of America as represented by the Administrator of the National Aeronautics and Space Administration. Written objections to the prospective grant of an exclusive license to Phoenix Systems International, Inc. should be sent to Office of the Chief Counsel, John F. Kennedy Space Center, Kennedy Space Center, FL 32899.

DATES: Responses to this notice must be received by August 13, 2004.

FOR FURTHER INFORMATION CONTACT: Randy Heald, Patent Counsel/Assistant Chief Counsel, NASA, Office of the Chief Counsel, John F. Kennedy Space Center, Mail Code CC–A, Kennedy Space Center, FL 32899; telephone (321) 867–7214.

Dated: July 21, 2004.

Keith T. Sefton,

Deputy General Counsel (Administration and Management).

[FR Doc. 04–17265 Filed 7–28–04; 8:45 am]

BILLING CODE 7510–01–P

NATIONAL AERONAUTICS AND SPACE ADMINISTRATION

[Notice 04–094]

Notice of Prospective Patent License

AGENCY: National Aeronautics and Space Administration.

ACTION: Notice of prospective patent license.

SUMMARY: NASA hereby gives notice that PAC Materials, L.L.C., of Huntsville, Alabama, has applied for an exclusive license to practice the invention MFS–31828–1–PCT in Taiwan entitled ''High-Strength Aluminum Alloy for High Temperature Applications,'' assigned to the United States of America as represented by the Administrator of the National Aeronautics and Space Administration. Written objections to the prospective grant of a license should be sent to Mr. James J. McGroary, Chief Patent Counsel/LS01, Marshall Space Flight Center, Huntsville, AL 35812. NASA has not yet made a determination to grant the requested license and may deny the requested license even if no objections are submitted within the comment period.

DATES: Responses to this notice must be received by August 13, 2004.

FOR FURTHER INFORMATION CONTACT: Sammy A. Nabors, Technology Transfer Department/CD30, Marshall Space Flight Center, Huntsville, AL 35812, (256) 544–5226.

Dated: July 21, 2004.

Keith T. Sefton,

Deputy General Counsel (Administration and Management).

[FR Doc. 04–17266 Filed 7–28–04; 8:45 am]

BILLING CODE 7510–01–P

NUCLEAR REGULATORY COMMISSION

[Docket Nos. 50–498 and 50–499]

South Texas Project Nuclear Operating Company; South Texas Project Electric Generating Station, Unit Nos. 1 and 2; Environmental Assessment and Finding of No Significant Impact

The U.S. Nuclear Regulatory Commission (NRC) is considering issuance of exemptions from title 10 of the Code of Federal Regulations (10 CFR) part 50, section 50.44, section 50.46, and Appendix K, for Facility Operating License Nos. NPF–76 and NPF–80, issued to South Texas Project Nuclear Operating Company (the licensee), for operation of South Texas Project Electric Generating Station (STPEGS), Units 1 and 2, located in Matagorda County, Texas. Therefore, as required by 10 CFR 51.21, the NRC is issuing this environmental assessment and finding of no significant impact.

Environmental Assessment

Identification of the Proposed Action

The proposed action would exempt STPEGS, Units 1 and 2, from the requirements of 10 CFR part 50, section 50.44, section 50.46 and Appendix K, to allow the use of up to eight Lead Test Assemblies (LTAs) fabricated with Optimized ZIRLO™, a cladding material that contains a nominally lower tin content than previously approved cladding materials.

The proposed action is in accordance with the licensee's application dated May 27, 2004.

The Need for the Proposed Action

As the nuclear industry pursues longer operating cycles with increased fuel discharge burnups and more aggressive fuel management, the corrosion performance specifications for the nuclear fuel cladding become more demanding. Industry data indicates that corrosion resistance improves for cladding with a lower tin content. The optimum tin level provides a reduced corrosion rate while maintaining the benefits of mechanical strengthening and resistance to accelerated corrosion from abnormal chemistry conditions. In addition, fuel rod internal pressures (resulting from the increased fuel duty, use of integral fuel burnable absorbers, and corrosion/temperature feedback effects) have become more limiting with respect to fuel rod design criteria. By reducing the associated corrosion buildup, and thus, minimizing temperature feedback effects, additional margin to fuel rod internal pressure design criteria is obtained.

As part of a program to address these issues, the Westinghouse Electric Company has developed an LTA program, in cooperation with the licensee, that includes a fuel cladding with a tin content lower than the currently licensed range for ZIRLO™. The NRC's regulations in 10 CFR part 50, section 50.44, section 50.46, and Appendix K, make no provision for use of fuel rods clad in a material other than Zircalloy or ZIRLO™. The licensee has requested the use of up to eight LTAs with a tin composition that is less than that specified in the licensing basis for ZIRLO™, as defined in Westinghouse design specifications. Therefore, use of the LTAs calls for exemptions from 10 CFR part 50, section 50.44, section 50.46, and Appendix K.

Environmental Impacts of the Proposed Action

The NRC staff has completed its safety evaluation of the proposed action and concludes that the proposed exemptions would not increase the probability or consequences of accidents previously analyzed, and would not affect facility radiation levels or facility radiological effluents that may be released offsite.

There is no significant increase in occupational or public radiation exposure. Therefore, there are no significant radiological environmental impacts associated with the proposed action. The details of the staff's safety evaluation will be provided in the exemption that will be issued as part of the letter to the licensee approving the exemption to the regulation.

With regard to potential non-radiological impacts, the proposed action does not have a potential to affect any historic sites. It does not affect non-radiological plant effluents and has no other environmental impact. Therefore, there are no significant non-radiological environmental impacts associated with the proposed action.

Accordingly, the NRC staff concludes that there are no significant environmental impacts associated with the proposed action.

Environmental Impacts of the Alternatives to the Proposed Action

As an alternative to the proposed action, the NRC staff considered denial of the proposed action (*i.e.*, the ''no-action'' alternative). Denial of the application would result in no change in current environmental impacts. The environmental impacts of the proposed action and the alternative action are similar.

Alternative Use of Resources

The action does not involve the use of any different resources than those previously considered in the ''Final Environmental Statement related to the Operation of South Texas Project Units 1 and 2,'' NUREG–1171, dated August 1986.

Agencies and Persons Consulted

On June 23, 2004, the staff consulted with the Texas State official, Mr. William Silva, Bureau of Radiation Control of the Texas Department of Health, regarding the environmental impact of the proposed action. The State official had no comments.

Finding of No Significant Impact

On the basis of the environmental assessment, the NRC concludes that the proposed action will not have a significant effect on the quality of the human environment. Accordingly, the NRC has determined not to prepare an environmental impact statement for the proposed action.

For further details with respect to the proposed action, see the licensee's letter dated May 27, 2004. Documents may be examined, and/or copied for a fee, at the NRC's Public Document Room (PDR), located at One White Flint North, Public File Area O1 F21, 11555 Rockville Pike (first floor), Rockville, Maryland. Publicly available records will be accessible electronically from the Agencywide Documents Access and Management System (ADAMS) Public Electronic Reading Room on the internet at the NRC Web site, *http://www.nrc.gov/reading-rm/adams.html.* Persons who do not have access to ADAMS, or who encounter problems in accessing the documents located in ADAMS, should contact the NRC's PDR Reference staff by telephone at 1–800–397–4209 or (301) 415–4737, or by e-mail to *pdr@nrc.gov.*

Dated in Rockville, Maryland, this 19th day of July, 2004.

For the Nuclear Regulatory Commission.

Robert A. Gramm,

Chief, Section 1, Project Directorate IV, Division of Licensing Project Management, Office of Nuclear Reactor Regulation.

[FR Doc. 04–17260 Filed 7–28–04; 8:45 am]

BILLING CODE 7590–01–P

POSTAL RATE COMMISSION

[Docket No. MC2004–5; Order No. 1413]

Repositionable Notes Market Test

AGENCY: Postal Rate Commission.

ACTION: Notice and order.

SUMMARY: This document establishes a formal docket for consideration of a proposed one-year market test of a supplemental service feature for bulk First-Class Mail, Standard Mail, and Periodicals. Conducting the test would allow the Service to collect data and information on customer response and related matters, and thereby determine whether it should seek to establish these services as permanent offerings.

DATES: See **SUPPLEMENTARY INFORMATION** for dates.

ADDRESSES: Submit comments electronically via the Commission's Filing Online system at *http://www.prc.gov.*

FOR FURTHER INFORMATION CONTACT: Stephen L. Sharfman, general counsel, at 202–789–6818.

SUPPLEMENTARY INFORMATION: Notice is hereby given that on July 16, 2004, the Postal Service filed a request with the Postal Rate Commission pursuant to section 3623 of the Postal Reorganization Act, 39 U.S.C. 101 *et seq.*, for a recommended decision on a proposed market test of a supplemental service feature for bulk First-Class Mail, Standard Mail, and Periodicals that would allow ''repositional notes'' to be attached to such mail. The Postal Service proposes to implement the market test through additions to the Domestic Mail Classification Schedule (DMCS) and associated new surcharges. The request includes attachments and is supported by the testimony of two witnesses and a library reference. It is on file in the Commission's docket room for inspection during regular business hours and is available on the Commission's home page at *www.prc.gov.*

Description of the request. For a period of one year, the Postal Service proposes to charge mailers for attaching a ''Repositional Note'' (RPN) to mailpieces of certain subclasses. According to the Postal Service, an RPN is a Post-it-type self-adhesive note that mailers can affix to the outside of a mailpiece. Because eligible RPNs are mechanically applied using air pressure, and have an adhesive strip that is wider than on notes used in typical office settings, they are unlikely to become detached from the mailpiece during handling. They are typically used to display advertising messages that encourage recipients to open, read, and respond to the internal contents of the mailpiece. They can be removed by the recipient and re-attached to computers, refrigerators, or similar objects as reminders that extend the life of the commercial message. They can also be used as a simple way to correct minor errors in catalogues. USPS–T–1 (Direct Testimony of USPS witness Holland) at 1.

The Postal Service states that RPNs have been available nationally for bulk letter mail for approximately a year, and that there have been no operational problems or costs to the Postal Service associated with their use over that time. It states that Domestic Mail Manual provisions authorizing RPNs for bulk letter mail are currently in place. Its proposed market test, therefore, is not expected to alter the *status quo*, except to allow bulk flat mail to carry RPNs, and to charge fees for their use. *Id.* at 2–3.

Motion for a stand-alone market test. The Postal Service proposes that portions of rules 54, 64, and 161 be waived in this case. To the extent that rules 161(a) and 162 require the filing of a contemporaneous request for a permanent classification change as a prerequisite for a market test, the Postal Service asks for a waiver of that requirement. The Commission has determined that the Postal Service's RPN proposal is not appropriately filed under its market test rules. It is, however, treating this proposal as if filed pursuant to its provisional service change rules. *See* 39 CFR 3001, subpart

J. Accordingly, the motion for waiver of the requirement that a proposed market test be filed concurrently with a proposed permanent classification change will be dismissed as moot.

In its motion, the Postal Service argues that a formal request for a permanent classification change is unnecessary in light of the purpose of the test and the simplicity of the proposal. It asserts that the purpose of the market test is to explore demand levels at the surcharges chosen. It asserts that a permanent request formulated at this stage would essentially duplicate the market test that it requests, but could not reflect any modifications that market experience might prompt. Therefore, it argues, it would be more productive to formulate a permanent proposal after market experience was gathered. It asserts that the simplicity of the proposal obviates the need for the extensive documentation that would ordinarily accompany a request for permanent changes to classification and rate schedules. It argues that Docket No. MC98–1 (Mailing Online) provides a precedent for allowing a market test to proceed even though it is not part of a proposal for a permanent classification change. United States Postal Service Motion for Waiver of Request for Permanent Change as a Condition for Market Test Procedures, July 16, 2004, at 1, 4.

The Postal Service's position that the market test rules can be appropriately invoked when the market test is not undertaken concurrently with, and in support of, a proposed permanent change in the mail classification schedule is based on a strained interpretation of that rule, and of precedents that have implemented it.

The market test rules are intended to give the Postal Service a way of gaining operational experience and gathering the raw material with which to make an evidentiary record that will support a new, permanent mail classification. They contemplate minimal evidentiary support for a test that is limited in service area, duration, and potential impact on mailers and competitors. The rationale for allowing the Postal Service to proceed with a market test despite a sparse evidentiary record is that a procedure is needed to allow the Postal Service to ''fill in the holes'' and to make a substantial record for the associated proposed classification change where a probative record would otherwise be difficult to compile.

Associating a market test with a proposed classification change ensures that stakeholders will soon be able to evaluate a closely-related permanent change based on a substantial record. This purpose is reflected in 39 CFR 3001.162(i), which requires that the market test include ''a plan for gathering the data needed to support a permanent change in mail classification and for reporting the test data to the Commission.'' For this reason, rules 161(a) and 162 state that a market test is to be preliminary to, and in support of, a proposed permanent classification change. *See* 39 CFR 3001.161(a) and the preamble to 39 CFR 3001.162.

The Postal Service's assertions that its RPN proposal is simple, straightforward, and will have little impact on existing rate and classification schedules does not obviate the ultimate need for a substantial record with which to evaluate the proposal. Docket No. MC98–1 was allowed to proceed as a market test because there was a substantial need to ''fill in the holes'' to support a permanent change, and there was a concurrent request to process the proposal as an experiment under rule 67 [39 CFR 3001.67] of the Commission's rules. This increased the prospect that a more substantial record would soon be available with which to evaluate the Mailing Online proposal.

The Postal Service's RPN proposal is not associated with a proposed change in the Domestic Mail Classification Schedule. It appears to be already well developed operationally and conceptually, and to have been nationally available for a considerable period of time. As the Postal Service appears to acknowledge, its RPN proposal could be cast as a proposed permanent change with little alteration. Its purpose is less to fill in unknowns that are needed to fashion a proposed permanent change, than to make a service enhancement quickly available, where the enhancement poses little risk of upsetting the *status quo*. Consequently, it is not appropriate to consider the Postal Service's RPN proposal under the Commission's market test rules.

It is, however, appropriate for consideration under the Commission's rules governing provisional service changes. These rules are available to process requests to establish provisional services that ''will supplement, but will not alter, existing mail classifications and rates for a limited and fixed duration.'' *See* 39 CFR 3001.171 and 173. They are meant to facilitate ''introduction of provisional services that enhance the range of postal services available to the public, without producing a material adverse effect overall on postal revenues or costs, and without causing unnecessary or unreasonable harm to competitors of the Postal Service.'' The Commission's provisional service change rules are designed to allow provisional service enhancements with little potential to adversely impact stakeholders to be implemented quickly without the making of an unnecessarily elaborate factual record.

The Postal Service's RPN proposal would add to the rate and service options under the DMCS rather than alter or reconfigure existing rate and classification schedules. It is a simple change, limited to one year, that is expected not to adversely effect any stakeholder. Therefore, it appears well suited for processing under the streamlined and accelerated procedures of the Commission's provisional service change rules. *See* 39 CFR part 3001, subpart J. Accordingly, the Commission will provisionally allow the Postal Service's filing to be processed under those rules.

Conditional motion for waiver of certain documentation requirements. The Postal Service asserts that there is precedent for construing rules 54, 64 and 162 not to require the full panoply of documentation called for by those rules if the proposed classification change is experimental or minor in nature. Rather than require the Postal Service to submit much of that documentation in a form that specifically addresses the minor classification change being proposed, the Postal Service argues that the Commission has been willing to consider material incorporated by reference from the most recent general rate case and from periodically reported material to largely satisfy these documentation requirements. The Postal Service states that its Repositional Notes proposal is a minor classification change that would not materially affect the rates, fees, and classifications established in Docket No. R2001–1, the most recent general rate case. It asserts that it would have no impact on Postal Service costs, and limited impact on revenues and volumes. Accordingly, the Postal Service argues, it should be sufficient that its request incorporates by reference generalized documentation from Docket No. R2001–1, and from periodic reports from past years such as Cost and Revenue Analysis reports. It asks that if the Commission construes its documentation rules strictly, and does not consider incorporation of such generalized historical documentation by reference to be sufficient, that the Commission waive certain of those rules. It lists the following rules that would need to be waived under a strict construction of their applicability: 54(b)(3), 54(c), 54(e), 54(f)(2)–(3),

54(h)(1)–(12), 54(i), 54(j)(1)–(7), 64(b)(1)–(4), 64(c)(1)–(3), 64(d), and 64(h). Statement of the United States Postal Service Concerning Compliance with Filing Requirements and Conditional Motion for Waiver, July 16, 2004 at 1–5.

The Postal Service is proposing that RPNs be allowed on bulk letters and flats in the First-Class Mail, Standard Mail, or Periodicals subclasses. The proposed surcharge is 0.5 cent per piece for First-Class Mail, and 1.5 cents per piece for Standard and Periodical mail. USPS–T–1 at 1–5; USPS–T–2 (Direct Testimony of USPS witness Kaneer) at 3.[1]

Proposed settlement procedures. The Postal Service requests that the Commission establish settlement procedures in this proceeding. It argues that settlement of issues surrounding its request is appropriate because the proposed test is simple and straightforward, is to last for only one year, merely increases the options for mailers of certain classes of bulk mail, and involves only the testing of demand at the two prices proposed. The Postal Service notes that the Commission's market test rule contemplates that a recommend decision on the proposal be issued within 90 days. *See* rule 164. It asks the Commission to establish a date for a settlement conference in advance of the prehearing conference, and to be granted permission in advance to conduct the conference in the Commission's hearing room. It observes that expediting the processing of its proposal in this manner would help make RPNs available during the peak mailing season. *See* United States Postal Service Motion for Establishment of Settlement Procedures, July 16, 2004, accompanying its request. It adds that if a settlement conference were held before the intervention period expires, and a participant were to subsequently intervene, that the Postal Service could brief any such intervenor on the substance of the settlement conference.

The period for issuing a recommended decision under the Commission's provisional service change rules is 90 days, and the rationale for seeking an early settlement of this case applies equally under those rules. *See* 39 CFR 3001.174. Accordingly, the Commission authorizes settlement negotiations in this proceeding. It appoints Postal Service counsel as settlement coordinator. In this capacity, counsel for the Service shall report on the status of settlement discussions at the prehearing conference. The Commission authorizes the settlement coordinator, at his discretion, to schedule settlement conferences on August 9, 10, or 11, 2004, prior to the prehearing conference in the Commission's hearing room. Authorization of settlement discussions does not constitute a finding on the proposal's procedural status or on the need for a hearing.

Further procedures. Rule 173(b) provides that interested persons may intervene within 28 days of the Postal Service's filing of a request for permission to conduct a provisional service change. In view of the Postal Service's objective of implementing its proposal in time for the peak mailing season, the normal period for intervention under subpart J will be shortened from 28 days to 21 days. Notices of intervention will be due on August 6, 2004. Late motions for intervention will nevertheless be entertained for good cause shown. The notice of intervention shall be filed using the Filing Online system at the Commission's Web site (*www.prc.gov*), unless a waiver is obtained for hardcopy filing. *See* rules 9(a) and 10(a) [39 CFR 3001.9a and 10a]. Notices should indicate whether participation will be on a full or limited basis. *See* rules 20 and 20a [39 CFR 3001.20 and 20a].

Section 173(e) of the rules of practice [39 CFR 3001.173(e)] states that the Commission will hold hearings on a Postal Service request for a provisional service change.

> when it determines that there is a genuine issue of material fact to be resolved in the consideration of the Postal Service's request, that party shall file with the Commission a request for a hearing within the time allowed in the notice of proceeding. The request for a hearing shall state with specificity the fact or facts set forth in the Postal Service's filing that the party disputes, and when possible, what the party believes to be the true fact or facts and the evidence it intends to provide in support of its position.

Any participant who wishes to dispute a genuine issue of material fact to be resolved with regard to the Postal Service's RPN proposal shall file a request for a hearing by August 11, 2004. In order to assist the Commission's determination of whether a hearing is necessary, should any written discovery be directed to the Postal Service by a participant before August 11, 2004, the Postal Service shall respond within 10 days.

Prehearing conference. A prehearing conference will be held on August 11, 2004 at 11 a.m. in the Commission's hearing room. Participants shall be prepared to address whether there is an issue of material fact requiring a hearing as provided by rule 173(e) [39 CFR 173(e)]. It would greatly assist the Commission if participants file supporting written argument in advance of the prehearing conference in regard to the identification of issues that would indicate the need to schedule a hearing.

Public participation. In conformance with section 3624(a) of title 39, the Commission designates Shelley S. Dreifuss, director of the Commission's Office of the Consumer Advocate (OCA), to represent the interests of the general public in this proceeding. Pursuant to this designation, Ms. Dreifuss will direct the activities of Commission personnel assigned to assist her and, upon request, will supply their names for the record. Neither Ms. Dreifuss nor any of the assigned personnel will participate in or provide advice on any Commission decision in this proceeding.

It is ordered:

1. The Commission establishes Docket No. MC2004–5 to consider the Postal Service Request referred to in the body of this Order.

2. The Commission will act *en banc* in this proceeding.

3. Notices of intervention shall be filed no later than August 6, 2004.

4. Shelley S. Dreifuss, director of the Commission's Office of the Consumer Advocate, is designated to represent the interests of the general public.

5. The Postal Service's RPN proposal will be processed under subpart J of the Commission's rules of practice [39 CFR 3001, subpart J].

6. The Postal Service's Motion for Waiver of Request for Permanent Change as a Condition for Market Test Procedures is dismissed as moot.

7. Answers to the Postal Service's Motion for Filing Requirements and Conditional Motion for Waiver of the portions of rule 54 and 64 cited in that motion are due on August 6, 2004.

8. Postal Service counsel is appointed to serve as settlement coordinator in this proceeding. The Commission will make its hearing room available for settlement conferences on August 9, 10, or 11, 2004, and at such times deemed necessary by the settlement coordinator.

9. A prehearing conference will be held on August 11, 2004, at 11 a.m., in the Commission's hearing room.

[1] At page 1 of the Notice of the United States Postal Service Concerning the Filing of a Request for a Recommended Decision on a Market Test, dated July 16, 2004, accompanying the Postal Service's request, the Postal Service states that the proposed surcharges are "1½ cents for RPNs on First-Class Mail and ½ cent for RPNs on Standard Mail and Periodicals." On July 20, 2004, the Postal Service filed errata to this notice, confirming that the proposed rate is ½ cent for applying an RPN to a First-Class mailpiece, and 1½ cent for applying an RPN to a piece of Standard or Periodical mail. On the same date, it filed errata to Attachment E to its request correcting the relevant proposed DMCS and rate schedule sections.

10. Participants who wish to request a hearing on the Postal Service's Request in this docket to conduct a market test shall submit such a request, together with statements in conformance with 39 CFR 3001.173(e), no later than August 11, 2004.

11. The Postal Service shall provide responses to any written discovery requests submitted before August 11, 2004, within 10 days.

12. The Secretary shall cause this Notice and Order to be published in the **Federal Register**.

Issued: July 22, 2004.

By the Commission.

Garry J. Sikora,

Acting Secretary.

[FR Doc. 04–17094 Filed 7–28–04; 8:45 am]

BILLING CODE 7710–FW–P

POSTAL SERVICE

Board of Governors; Sunshine Act Meeting; Notification of Item Added to Meeting Agenda

DATE OF MEETING: July 19, 2004.

STATUS: Closed.

PREVIOUS ANNOUNCEMENT: 69 FR 41860, July 12, 2004.

Addition: Postal Rate Commission Opinion and Recommended Decision in Docket No. MC2004–1, Experimental Periodicals Co-Palletization Dropship Discounts for High Editorial Publications.

At its closed meeting on July 19, 2004, the Board of Governors of the United States Postal Service voted unanimously to add this item to the agenda of its closed meeting and that no earlier announcement was possible. The General Counsel of the United States Postal Service certified that in her opinion discussion of this item could be properly closed to public observation.

CONTACT PERSON FOR MORE INFORMATION: William T. Johnstone, Secretary of the Board, U.S. Postal Service, 475 L'Enfant Plaza, SW., Washington, DC 20260–1000.

William T. Johnstone,

Secretary.

[FR Doc. 04–17447 Filed 7–27–04; 3:54 pm]

BILLING CODE 7710–12–M

SECURITIES AND EXCHANGE COMMISSION

[Release No. 34–50067; File No. SR–OPRA–2004–03]

Options Price Reporting Authority; Order Approving an Amendment to the Plan for Reporting of Consolidated Options Last Sale Reports and Quotation Information To Revise Guideline 1 of the Capacity Guidelines To Confirm That it Is Within the Authority of the Independent System Capacity Advisor To Make Determinations Concerning the Establishment, Modification or Removal of Output Throttles From the OPRA System

July 22, 2004.

On May 7, 2004, the Options Price Reporting Authority (''OPRA'') submitted to the Securities and Exchange Commission (''Commission''), pursuant to section 11A of the Securities Exchange Act of 1934 (''Act'')[1] and Rule 11Aa3–2 thereunder,[2] an amendment to the Plan for Reporting of Consolidated Options Last Sale Reports and Quotation Information (''OPRA Plan'' or ''Plan'').[3] The proposed amendment would revise Guideline 1 of the Capacity Guidelines to confirm that it is within the authority of the Independent System Capacity Advisor (''ISCA'') under the OPRA Plan to make determinations concerning the establishment, modification or removal of any throttle on the output of the OPRA System. Notice of the proposal was published in the **Federal Register** on June 23, 2004.[4] The Commission received no comment letters on the proposed OPRA Plan amendment. This order approves the proposal.

Guideline 1 of the Capacity Guidelines in the OPRA Plan sets forth the ''Function and Authority of the ISCA.'' The purpose of the proposed amendment to Guideline 1 is to include in the Capacity Guidelines an express statement that the authority of the ISCA would include the authority to establish a throttle limiting the output of the System to less than the total capacity available in the System, and to modify or remove any such throttles that may be established from time to time.[5] OPRA believes that throttling System output to less than total System capacity could sometimes be an appropriate way to limit the maximum message-handling capacity that vendors and subscribers would be required to have.

After careful review, the Commission finds that the proposed OPRA Plan amendment is consistent with the requirements of the Act and the rules and regulations thereunder.[6] The Commission believes that the proposed OPRA Plan amendment is consistent with Section 11A of the Act[7] and Rule 11Aa3–2 thereunder[8] in that it is appropriate in the public interest, for the protection of investors and the maintenance of fair and orderly markets, to remove impediments to, and perfect the mechanisms of, a national market system.

Specifically, given the recent establishment of the ISCA and its responsibilities in planning and implementing System modifications, the Commission finds that it is appropriate for OPRA to clarify in the Plan the ISCA's authority to make decisions with respect to System output throttles. The Commission believes that providing the ISCA with this authority should ensure that these decisions are not influenced by competitive considerations among the parties to the OPRA Plan.

It is therefore ordered, pursuant to section 11A of the Act,[9] and Rule 11Aa3–2 thereunder,[10] that the proposed OPRA Plan amendment (SR–OPRA–2004–03) be, and it hereby is, approved.

[1] 15 U.S.C. 78k–1.

[2] 17 CFR 240.11Aa3–2.

[3] OPRA is a national market system plan approved by the Commission pursuant to Section 11A of the Act and Rule 11Aa3–2 thereunder. *See* Securities Exchange Act Release No. 17638 (March 18, 1981), 22 S.E.C. Docket 484 (March 31, 1981).

The OPRA Plan provides for the collection and dissemination of last sale and quotation information on options that are traded on the participant exchanges. The six participants to the OPRA Plan are the American Stock Exchange LLC, the Boston Stock Exchange, Inc., the Chicago Board Options Exchange, Inc., the International Securities Exchange, Inc., the Pacific Exchange, Inc., and the Philadelphia Stock Exchange, Inc.

[4] *See* Securities Exchange Act Release No. 49871 (June 16, 2004), 69 FR 35082.

[5] The output throttle that is the subject of the proposed amendment would serve to limit the total output of the OPRA System. It would be different from the OPRA System's ''dynamic throttle,'' which allows any unused System capacity to be temporarily and dynamically allocated to a participant exchange that needs additional capacity on a short-term, interruptible basis. Telephone conversation between Michael L. Meyer, Counsel to OPRA, Schiff Hardin LLP, and Cyndi N. Rodriguez, Special Counsel, Division of Market Regulation, Commission, on June 14, 2004.

[6] In approving this proposed OPRA Plan amendment, the Commission has considered its impact on efficiency, competition, and capital formation. 15 U.S.C. 78c(f).

[7] 15 U.S.C. 78k–1.

[8] 17 CFR 240.11Aa3–2.

[9] 15 U.S.C. 78k–1.

[10] 17 CFR 240.11Aa3–2.

For the Commission, by the Division of Market Regulation, pursuant to delegated authority.[11]

Margaret H. McFarland,

Deputy Secretary.

[FR Doc. 04–17293 Filed 7–28–04; 8:45 am]

BILLING CODE 8010–01–P

SECURITIES AND EXCHANGE COMMISSION

[Release No. 34–50063; File No. SR–CBOE–2004–49]

Self-Regulatory Organizations; Notice of Filing and Immediate Effectiveness of Proposed Rule Change by the Chicago Board Options Exchange, Incorporated To Allow the Exchange To List Up To Seven Expiration Months for Certain Index Options up Until the Expiration of Those Options in November 2004

July 22, 2004.

Pursuant to section 19(b)(1) of the Securities Exchange Act of 1934 (the ''Act'')[1] and Rule 19b–4 thereunder,[2] notice is hereby given that on July 22, 2004, the Chicago Board Options Exchange, Incorporated (''CBOE'' or ''Exchange'') filed with the Securities and Exchange Commission (''Commission'') the proposed rule change as described in items I and II below, which items have been prepared by the Exchange. The CBOE submitted the proposed rule change under section 19(b)(3)(A) of the Act[3] and Rule 19b–4(f)(6) thereunder,[4] which renders the proposal effective upon filing with the Commission. The Commission is publishing this notice to solicit comments on the proposed rule change from interested persons.

I. Self-Regulatory Organization's Statement of the Terms of Substance of the Proposed Rule Change

The CBOE proposes to list up to seven expiration months, instead of the currently permitted six, for certain index options up until the expiration of those options in November 2004. The text of the proposed rule change is below. Proposed new language is *italicized*; proposed deletions are in brackets.

* * * * *

CHAPTER XXIV

Index Options

* * * * *

Terms of Index Options

Rule 24.9 (a) *General.*

(1) No change.

(2) *Expiration Months.* Index option contracts may expire at three-month intervals or in consecutive months. The Exchange may list up to six expiration months at any one time, but will not list index options that expire more than twelve months out. Notwithstanding the preceding restriction, until the expiration in *November 2004*[January 2000], the Exchange may list up to seven expiration months at any one time *for the SPX, MNX and DJX index option contracts*, provided one of those expiration months is *November 2004*[January 2000].

(3)–(5) No change.

(b)–(c) No change.

* * **Interpretations and Policies:*

.01–.11 No change.

* * * * *

II. Self-Regulatory Organization's Statement of the Purpose of, and Statutory Basis for, the Proposed Rule Change

In its filing with the Commission, the Exchange included statements concerning the purpose of and basis for the proposed rule change and discussed any comments it received on the proposed rule change. The text of these statements may be examined at the places specified in Item IV below. The CBOE has prepared summaries, set forth in sections A, B, and C below, of the most significant parts of such statements.

A. Self-Regulatory Organization's Statement of the Purpose of, and Statutory Basis for, the Proposed Rule Change

1. Purpose

The Exchange is proposing to amend paragraph (a)(2) of Rule 24.9 to allow, for a limited time, the Exchange to list up to seven expiration months in certain index options. Currently, Rule 24.9(a)(2) permits the Exchange to list only six expiration months in any index options at any one time.

Under the current application of the Rule, the Exchange generally will list three consecutive near term months and three months on a quarterly expiration cycle. The Exchange has been approached by a number of institutional customers who are interested in trading the Standard & Poor's 500 (SPX), CBOE Mini-NDX (MNX) and the Dow Jones Industrial Average (DJX) index options with an expiration of November 2004. These customers have explained to the Exchange that they believe that index options expiring at that time will provide a useful tool to hedge positions in stocks overlying particular index options or to hedge market exposure to the equity markets generally against the uncertainty presented by the elections. By listing index options with a November 2004 expiration at this point, the Exchange will provide these customers with the opportunity to hedge their positions in an orderly fashion well in advance of the elections. The Exchange notes that the Chicago Mercantile Exchange has announced that it will add November 2004 expirations for certain index futures products that are generally considered financial instruments with which CBOE index options compete for customer interest.

The Exchange recognizes that this request to expand the allowable expiration months for index options is a unique situation, and so the Exchange only intends to seek the ability to list seven expiration months until the November 2004 options expire. The Exchange notes that a seventh expiration month was permitted for index options for January 2000 in connection with Y2K.[5]

The Exchange represents that it has the system capacity to adequately handle the series that would be permitted to be added by this proposal. The Exchange provided to the Commission information in a confidential submission that supports its system capacity representations.

2. Statutory Basis

Because the temporary increase in the number of expiration months for index options would satisfy significant customer demand to address a unique hedging need, and because the series could be added without presenting capacity problems, the Exchange believes this rule change is consistent with and furthers the objectives of section 6(b)(5) of the Act in that it would remove impediments to and perfect the mechanism of a free and open market in a manner consistent with the protection of investors and the public interest.

[11] 17 CFR 200.30–3(29).

[1] 15 U.S.C. 78s(b)(1).

[2] 17 CFR 240.19b–4.

[3] 15 U.S.C. 78s(b)(3)(A).

[4] 17 CFR 240.19b–4(f)(6).

[5] *See* Securities Exchange Act Release No. 41252 (April 5, 1999), 64 FR 17702 (April 12, 1999) (order approving File No. SR–CBOE–99–09) (allowed the Exchange to list up to seven expiration months for certain index options up until the expiration of those options in January 2000, to provide customers with a useful tool to hedge positions in stocks overlying particular index options or to hedge market exposure to the equity markets generally against the uncertainty presented by potential Year 2000 computer problems).

B. Self-Regulatory Organization's Statement on Burden on Competition

CBOE does not believe that the proposed rule change will impose any burden on competition not necessary or appropriate in furtherance of the purposes of the Act.

C. Self-Regulatory Organization's Statement on Comments on the Proposed Rule Change Received From Members, Participants, or Others

No written comments were solicited or received with respect to the proposed rule change.

III. Date of Effectiveness of the Proposed Rule Change and Timing for Commission Action

The CBOE has filed the proposed rule change pursuant to section 19(b)(3)(A) of the Act[6] and subparagraph (f)(6) of Rule 19b–4 thereunder.[7] Because the foregoing rule change: (1) Does not significantly affect the protection of investors or the public interest; (2) does not impose any significant burden on competition; and (3) does not become operative for 30 days from the date on which it was filed, or such shorter time as the Commission may designate if consistent with the protection of investors and the public interest, the proposed rule change has become effective pursuant to section 19(b)(3)(A) of the Act and Rule 19b–4(f)(6) thereunder. At any time within 60 days of the filing of such proposed rule change, the Commission may summarily abrogate such rule change if it appears to the Commission that such action is necessary or appropriate in the public interest, for the protection of investors, or otherwise in furtherance of the purposes of the Act.

Pursuant to Rule 19b–4(f)(6)(iii) under the Act,[8] the proposal may not become operative for 30 days after the date of its filing, or such shorter time as the Commission may designate if consistent with the protection of investors and the public interest, and the self-regulatory organization must file notice of its intent to file the proposed rule change at least five business days beforehand. The Exchange has requested that the Commission waive the five-day pre-filing requirement and the 30-day operative delay so that the proposed rule change will become immediately effective upon filing.

The Commission believes that waiving the five-day pre-filing provision and the 30-day operative delay is consistent with the protection of investors and the public interest.[9] The Commission believes that waiving the pre-filing requirement and accelerating the operative date does not raise any new regulatory issues, significantly affect the protection of investors or the public interest, or impose any significant burden on competition and, therefore, designates the proposed rule change as effective and operative immediately.

IV. Solicitation of Comments

Interested persons are invited to submit written data, views, and arguments concerning the foregoing, including whether the proposed rule change, as amended, is consistent with the Act. Comments may be submitted by any of the following methods:

Electronic Comments

- Use the Commission's Internet comment form (*http://www.sec.gov/rules/sro.shtml*); or
- Send an e-mail to *rule-comments@sec.gov*. Please include File Number SR–CBOE–2004–49 on the subject line.

Paper Comments

- Send paper comments in triplicate to Jonathan G. Katz, Secretary, Securities and Exchange Commission, 450 Fifth Street, NW., Washington, DC 20549–0609.

All submissions should refer to File Number SR–CBOE–2004–49. This file number should be included on the subject line if e-mail is used. To help the Commission process and review your comments more efficiently, please use only one method. The Commission will post all comments on the Commission's Internet Web site (*http://www.sec.gov/rules/sro.shtml*). Copies of the submission, all subsequent amendments, all written statements with respect to the proposed rule change that are filed with the Commission, and all written communications relating to the proposed rule change between the Commission and any person, other than those that may be withheld from the public in accordance with the provisions of 5 U.S.C. 552, will be available for inspection and copying in the Commission's Public Reference Room. Copies of the filing also will be available for inspection and copying at the principal offices of the CBOE. All comments received will be posted without change; the Commission does not edit personal identifying information from submissions. You should submit only information that you wish to make available publicly. All submissions should refer to File Number SR-CBOE–2004–49 and should be submitted on or before August 19, 2004.

For the Commission, by the Division of Market Regulation, pursuant to delegated authority.[10]

Margaret H. McFarland,

Deputy Secretary.

[FR Doc. 04–17232 Filed 7–28–04; 8:45 am]

BILLING CODE 8010–01–P

[6] 15 U.S.C. 78s(b)(3)(A).

[7] 17 CFR 240.19b-4(f)(6).

[8] 17 CFR 240.19b-4(f)(6)(iii).

[9] For purposes only of waiving the operative date of this proposal, the Commission has considered the proposed rule's impact on efficiency, competition, and capital formation. 15 U.S.C. 78c(f).

[10] 17 CFR 200.30–3(a)(12).

SECURITIES AND EXCHANGE COMMISSION

[Release No. 34–50068; File No. SR–NASD–2004–101]

Self-Regulatory Organizations; Notice of Filing of Proposed Rule Change by the National Association of Securities Dealers, Inc. To Provide a Monthly Flat Fee for the Internal Distribution of PostData as an Alternative to the Monthly Per-Subscriber Fees Presently Available Under NASD Rule 7010(s)

July 23, 2004.

Pursuant to section 19(b)(1) of the Securities Exchange Act of 1934 (''Act''),[1] and Rule 19b–4 thereunder,[2] notice is hereby given that on June 28, 2004, the National Association of Securities Dealers, Inc. (''NASD''), through its subsidiary, the Nasdaq Stock Market, Inc. (''Nasdaq''), filed with the Securities and Exchange Commission (''Commission'') the proposed rule change as described in items I, II and III below, which items have been prepared by Nasdaq. The Commission is publishing this notice to solicit comments on the proposed rule change from interested persons.

I. Self-Regulatory Organization's Statement of the Terms of Substance of the Proposed Rule Change

Nasdaq proposes to provide a monthly flat fee for the internal distribution of PostData as an alternative to the monthly per-subscriber fees presently available under NASD Rule 7010(s). The text of the proposed rule change is below.[3] Proposed new language is in italics.

7010 System Services

(a)–(r) No change

[1] 15 U.S.C. 78s(b)(1).

[2] 17 CFR 240.19b–4.

[3] The proposed rule change is marked to show changes from the rule as it appears in the electronic NASD Manual available at *http://www.nasd.com.*

(s) NasdaqTrader.com Volume and Issue Data Package Fee

The charge to be paid by the subscriber for each entitled user receiving the Nasdaq Volume and Issue Data Package via NasdaqTrader.com shall be $70 per month. The charge to be paid by market data distributors for this information shall be $35 per month for each end user receiving the information through the data vendor. *A distributor, as defined in Rule 7010(q)(6)(B), may distribute and use the data internally for a flat monthly fee of $2000 (rather than paying the $35 end user fee for each user). Internal distribution means providing the data to those persons covered by the distributor agreement with Nasdaq signed by the distributor taking the data.* The availability of this service through NasdaqTrader.com shall be limited to NASD members, Qualified Institutional Buyers (as defined in Rule 144A of the Securities Act of 1933) and data vendors. The Volume and Issue Data package includes:

(1) Daily Share Volume reports

(2) Daily Issue Data

(3) Monthly Volume Summaries

(4) Buy Volume Report

(5) Sell Volume Report

(6) Crossed Volume Report

(7) Consolidated Activity Volume Report

All fees assessed under this subsection will be waived for a period of up to two months for all new subscribers and potential new subscribers. This fee waiver period would be applied on a rolling basis, determined by the date on which a new subscriber or potential subscriber contacts Nasdaq to receive access to PostData.

(t)–(u) No change

* * * * *

II. Self-Regulatory Organization's Statement of the Purpose of, and Statutory Basis for, the Proposed Rule Change

In its filing with the Commission, Nasdaq included statements concerning the purpose of and basis for the proposed rule change. The text of these statements may be examined at the places specified in item IV below. Nasdaq has prepared summaries, set forth in sections A, B, and C below, of the most significant aspects of such statements.

A. Self-Regulatory Organization's Statement of the Purpose of, and Statutory Basis for, the Proposed Rule Change

1. Purpose

Nasdaq proposes to provide a monthly flat fee for the internal distribution of PostData as an alternative to the monthly per-subscriber fees presently available under NASD Rule 7010(s).

PostData is a voluntary trading data distribution facility, accessible to NASD members, buy-side institutions, and market data vendors through the NasdaqTrader.com Web site.[4] PostData consists of seven reports provided in a single package: (1) Daily Share Volume Report provides subscribers with T+1 daily share volume in each Nasdaq security, listing the volume by any NASD member that permits the dissemination of this information; (2) Daily Issue Data summarizes the previous day's activity for every Nasdaq issue; (3) Monthly Summaries provide monthly trading volume statistics for the top 50 market participants sorted by industry sector, security, or type of trading (*e.g.*, block or total); (4) Buy Volume Report; (5) Sell Volume Report; (6) Crossed Volume Report; and (7) Consolidated Activity Volume Report.[5] Each of the final four reports offers information regarding total Nasdaq reported buy (or sell, or cross, or consolidated) volume in the security, and rankings of registered market makers based upon various aspects of their activity in Nasdaq. The reports also provide information about the number and character of each market maker's trades with respect to block volume, be it buy, sell, cross, or consolidated interest.

PostData is currently available through the NasdaqTrader.com Web site. Information is provided directly to subscribers for a fee of $70 per month. The information is also provided to market data distributors to be redistributed to their retail customers for whom the data distributor pays a $35 per month fee to Nasdaq for each end user obtaining this information.

Nasdaq proposes to establish a third method of availability for PostData, specifically, a $2000 monthly fee for internal distribution by distributors, as defined in NASD Rule 7010(q)(6)(B). This would allow customers to pay a $2000 flat monthly fee, rather than the $35 monthly fee for each end user. Both sell-side and buy-side firms that use PostData information for non-display purposes, such as for analytics or graphics, have indicated their interest in such a fee schedule because it relieves them of the administrative burden of tracking the end users that are entitled to receive the information and of reporting the number of such individuals to Nasdaq.

2. Statutory Basis

Nasdaq believes that the proposed rule change is consistent with the provisions of section 15A of the Act,[6] in general, and with section 15A(b)(5) of the Act,[7] in particular, in that the proposal provides for the equitable allocation of reasonable dues, fees, and other charges among members and issuers and other persons using any facility or system which the association operates or controls. Nasdaq believes the internal distribution fee is equitable in that it provides a potentially more economical option to distributors that primarily use PostData information on an internal basis, and reduces such distributors' administrative burdens.

B. Self-Regulatory Organization's Statement on Burden on Competition

Nasdaq does not believe that the proposed rule change will result in any burden on competition that is not necessary or appropriate in furtherance of the purposes of the Act.

C. Self-Regulatory Organization's Statement on Comments on the Proposed Rule Change Received From Members, Participants or Others

Nasdaq neither solicited nor received written comments with respect to the proposed rule change.

III. Date of Effectiveness of the Proposed Rule Change and Timing For Commission Action

Within 35 days of the date of publication of this notice in the **Federal Register** or within such longer period (i) as the Commission may designate up to 90 days of such date if it finds such longer period to be appropriate and publishes its reasons for so finding or (ii) as to which the self-regulatory organization consents, the Commission will:

A. By order approve such proposed rule change, or

B. Institute proceedings to determine whether the proposed rule change should be disapproved.

[4] *See* Securities Exchange Act Release No. 45270 (January 11, 2002), 67 FR 2712 (January 18, 2002).

[5] *See* Securities Exchange Act Release No. 46316 (August 6, 2002), 67 FR 52504 (August 12, 2002).

[6] 15 U.S.C. 78o–3.

[7] 15 U.S.C. 78o–3(b)(5).

IV. Solicitation of Comments

Interested persons are invited to submit written data, views, and arguments concerning the foregoing, including whether the proposed rule change is consistent with the Act. Comments may be submitted by any of the following methods:

Electronic Comments

- Use the Commission's Internet comment form (*http://www.sec.gov/rules/sro.shtml*); or
- Send an e-mail to *rule-comments@sec.gov.* Please include File No. SR–NASD–2004–101 on the subject line.

Paper Comments

- Send paper comments in triplicate to Jonathan G. Katz, Secretary, Securities and Exchange Commission, 450 Fifth Street, NW., Washington, DC 20549–0609.

All submissions should refer to File Number SR–NASD–2004–101. This file number should be included on the subject line if e-mail is used. To help the Commission process and review your comments more efficiently, please use only one method. The Commission will post all comments on the Commission's Internet Web site (*http://www.sec.gov/rules/sro.shtml*). Copies of the submission, all subsequent amendments, all written statements with respect to the proposed rule change that are filed with the Commission, and all written communications relating to the proposed rule change between the Commission and any person, other than those that may be withheld from the public in accordance with the provisions of 5 U.S.C. 552, will be available for inspection and copying in the Commission's Public Reference Section, 450 Fifth Street, NW., Washington, DC 20549. Copies of such filing also will be available for inspection and copying at the principal office of NASD. All comments received will be posted without change; the Commission does not edit personal identifying information from submissions. You should submit only information that you wish to make available publicly. All submissions should refer to File No. SR–NASD–2004–101 and should be submitted on or before August 19, 2004.

For the Commission, by the Division of Market Regulation, pursuant to delegated authority.[8]

Margaret H. McFarland,

Deputy Secretary.

[FR Doc. 04–17290 Filed 7–28–04; 8:45 am]

BILLING CODE 8010–01–P

SECURITIES AND EXCHANGE COMMISSION

[Release No. 34–50064; File No. SR–PCX–2003–64]

Self-Regulatory Organizations; Notice of Filing of Proposed Rule Change and Amendment Nos. 1 and 2 Thereto by the Pacific Exchange, Inc. Relating to Facilitation Crosses

July 22, 2004.

Pursuant to section 19(b)(1) of the Securities Exchange Act of 1934 (''Act'')[1] and Rule 19b–4 thereunder,[2] notice is hereby given that on November 20, 2003, the Pacific Exchange, Inc. (''PCX'' or ''Exchange'') filed with the Securities and Exchange Commission (''Commission'') the proposed rule change as described in items I, II and III below, which items have been prepared by the Exchange. On July 7, 2004, and July 15, 2004, respectively, the Exchange filed Amendment Nos. 1 and 2 to the proposed rule change.[3] The Commission is publishing this notice to solicit comments on the proposed rule change, as amended, from interested persons.

I. Self-Regulatory Organization's Statement of the Terms of Substance of the Proposed Rule Change

PCX is proposing to modify its facilitation crossing procedures in several respects in order to ensure that the customer side of a facilitation order will be executed if it is priced at or between quoted markets. Among other things, the proposal would also increase to 40% the guaranteed percentage of the customer order that a Floor Broker is entitled to cross at the quoted market. The text of the proposed rule change is set forth below. Proposed new language is italicized and proposed deletions are in brackets.

[8] 17 CFR 200.30–3(a)(12).

[1] 15 U.S.C. 78s(b)(1).

[2] 17 CFR 240.19b–4.

[3] See letters from Mai S. Shiver, Acting Director/Senior Counsel, PCX, to Nancy J. Sanow, Assistant Director, Division of Market Regulation (''Division''), Commission, dated July 6, 2004, and July 14, 2004. The changes made by Amendment Nos. 1 and 2 have been incorporated in this notice.

Rules of the Board of Governors of the Pacific Exchange, Inc.

Rule 6

Options Trading

''Crossing'' Orders and Stock/Option Orders

Rule 6.47 (a)–No change.

(b) *Facilitation Procedure.* [Crossing of Facilitation Orders.] *The Facilitation Procedure is a process by which a* [A] Floor Broker who holds an order for a [public] customer [or a broker-dealer] (''[c]*C*ustomer [*o*]*Order*'') and an order for the proprietary account of an OTP Holder or OTP Firm *or an organization under common control with a Lead Market Maker ''LMM''* that is representing that customer (the ''[f]*F*acilitation [*o*]*Order*'') may cross those orders [only if the following procedures and requirements are followed]. *The Floor Broker may do so by following the Facilitation Procedure outlined in this subsection (b) of this Rule. The Floor Broker must be willing to facilitate the entire size of the Customer Order entered via the Facilitation Procedure.*

(1) The size of the [c]*C*ustomer [o]*O*rder subject to facilitation must be at least fifty contracts. Orders for less than fifty contracts may be facilitated pursuant to this rule but are not subject to the firm guarantees of subsections (4) *through (6) of this Rule* [below pertaining to firm guarantees] *and therefore must satisfy all orders in the book and orders represented in the trading crowd (affording the trading crowd a reasonable period of time to respond) before the floor broker may cross the order.*

(2) The option order tickets for both the [f]*F*acilitation [o]*O*rder and the [c]*C*ustomer [o]*O*rder must display all of the terms of such orders, including any contingencies involving, and all related transactions in, either options or underlying or related securities. The Floor Broker must disclose all securities that are components of the [c]*C*ustomer [o]*O*rder.

(3) The Floor Broker must request bids and offers for all components of the [c]*Customer* [o]*O*rder, *including the size of the order, but does not have to specifically request a ''facilitation market.'' Once the trading crowd has been afforded a reasonable time to provide a quote, the quote will remain in effect only for such time as is necessary for the Floor Broker to immediately vocalize the Customer Order.* [and clearly disclose his intention to execute a facilitation cross transaction to the trading crowd. Once the trading crowd has provided a quote,

it will remain in effect until: (A) a reasonable amount of time has passed, or (B) there is a significant change in the price of the underlying security, or (C) the facilitation market has been improved. (The term ''significant change'' will be interpreted on a case-by-case basis by two Trading Officials or the Exchange based upon the extent of recent trading in the option and in the underlying security, and any other relevant factors.)]

(4) *In response to the trading crowd's quoted market, the Floor Broker may immediately consummate the facilitation cross if: (i) he or she immediately bids (offers) a price on the Customer Order that is on or inside the quoted market (''Facilitation Price'') provided by the trading crowd in response to the Floor Broker's request for a market and (ii) satisfies all other contingencies associated with the Customer Order. After satisfying any orders for the account of persons who are not OTP Holders or OTP Firms of the Exchange pending at the Facilitation Price, the Floor Broker may facilitate up to forty percent (40%) of the remaining Customer Order against the Facilitation Order at the Facilitation Price and must allow any other members of the trading crowd interested in trading at the facilitation price to execute the remaining sixty percent (60%) or more of the Customer Order. The allocation of the remaining Customer Order will be made on a (i) size pro-rata basis (the percentage of the orders that is the ratio of the size of the offers (bids) to the total size of the offers (bids) as described in 6.75(f)(6)); or (ii) equal basis (in the case of identical offers (bids) as described in PCX Rule 6.75(c)) where the floor broker's bid (offer) improved the crowd's price in response to the request for a market. If after providing the crowd reasonable time to execute the remaining 60% of the Customer Order any amount of the Customer Order remains, the Floor Broker must fill the remainder of the Customer Order by executing it against the Facilitation Order at the Facilitation Price.* [Once a market has been established and all public customer orders represented in the trading crowd have been satisfied, the Floor Broker may cross:

(A) forty percent (40%) of any remaining contracts at a price between the trading crowd's quoted market (*e.g.*, if the trading crowd's quoted market is 2.10–2.50, and the Floor Broker is representing a customer order to buy 1000 contracts, then the Floor Broker may cross 40% of 1000 at any 2.25 or any other improved price); or

(B) twenty-five percent (25%) of the contracts at the trading crowd's best bid or offer (*e.g.*, if the trading crowd's quoted market is 2.10—2.50, and the Floor Broker is representing a customer order to buy 1000 contracts, then the Floor Broker may cross 25% of 1000 at the trading crowd's offer).]

(5) *If the trading crowd does not provide a bid and offer for all components of the Customer Order in response to the Floor Broker's request within a reasonable period of time, for the purposes of this rule, either: (i) the quoted market disseminated by the Exchange prior to the commencement of the Facilitation Procedure will constitute the market quoted by the trading crowd in response to the Floor Broker's request; or (ii) for orders for which there is no disseminated market (such as complex orders), the market for the order will be determined by the disseminated quote for each leg of the transaction prior to the commencement of the Facilitation Procedure. Once the Floor Broker provides a Facilitation Price and can satisfy all of the contingencies associated with the Customer Order, the Customer Order is deemed consummated at the Facilitation Price. After satisfying the orders of any persons who are not OTP Holders or OTP Firms of the Exchange pending at the Facilitation Price, the Floor Broker may facilitate up to forty percent (40%) of the remaining Customer Order against the Facilitation Order at the Facilitation Price and must allow any other member of the trading crowd interested in trading at the facilitation price to execute the remaining sixty percent (60%) or more of the Customer Order. After providing the crowd reasonable time to execute the remaining 60% of the Customer Order, the Floor Broker must fill the remainder of the Customer Order by executing it against the Facilitation Order at the Facilitation Price.* [If the facilitation trade occurs at the LMM's quoted bid or offer in their allocated issue, then the LMM's guaranteed participation level shall apply only to the number of contracts remaining after all public customer orders and the firm facilitation order being represented by the Floor Broker have been satisfied pursuant to this rule. However, the total amount of participation that any firm and/or LMM may receive, as a guarantee, may not exceed, in the aggregate, forty percent (40%) of the customer order. If the trade occurs at a price other than the LMM's quoted bid or offer, the LMM is entitled to no guaranteed participation.]

(6) *If the facilitation trade occurs at the LMM's quoted bid or offer in their allocated issue and the Floor Broker takes less than forty percent (40%) of the trade, then the LMM may elect to accept either: (i) a guaranteed participation level of forty percent (40%) minus the Floor Broker's allocation percentage, or (ii) to participate in the pro-rata allocation on a non-guarantee participation level. If the trade occurs at a price other than the LMM's quoted bid or offer, the LMM is entitled to no ''guaranteed'' participation. Nothing in this rule is intended to prohibit a Floor Broker or LMM from trading more than their percentage entitlements if the other members of the trading crowd do not choose to trade the remaining portion of the order.* [The OTP Holders or OTP Firms of the trading crowd who established the facilitation market will have priority over all other non-public customer orders that were not represented in the trading crowd at the time that the facilitation market was established and will maintain priority over non-customer orders except for orders that improve the bid or offer. A Floor Broker who is holding a customer order and a facilitation order and who calls for a facilitation market will be deemed to be representing both the customer order and the facilitation order, so that the customer order and the facilitation order will also have priority over all other non-public customer orders that were not being represented in the trading crowd at the time that the facilitation market was established.]

(c)—No change.

(d)—Trading Crowd Opportunity to Respond. *Except as provided in subparagraph (b) of this rule relating to the Facilitation Procedure for Customer Orders of at least 50 contracts,* Floor Brokers are cautioned that they must allow OTP Holder or OTP Firm represented in the trading crowd a reasonable period in which to respond to the bid and/or offer prior to consummating the cross transaction. A reasonable period will not be defined in terms of specific time limit. However, an obvious attempt to execute a cross in an uninterrupted sequence with the announcement of the bid and offer is deemed to be a violation of Rule 6.47 and Rule 6.73, and grounds for objection to the cross transaction.

(e)–(f)—No change.

Commentary:

.01 The term ''[public] customer of an OTP Holder or OTP Firm'' shall mean, in connection with Rule 6.62(i) and 6.47, a customer that is neither an OTP Holder or OTP Firm nor a broker/dealer.

.02 When accepting a bid or offer made on behalf of a [public] customer,

all contingencies of the [public] [c]*C*ustomer [o]*O*rder must be satisfied by the accepting OTP Holder or OTP Firm.

.03—No change.

.04 Where a related transaction must be effected in another market, that transaction must be effected prior to [effecting] the options transaction.

.05—No change.

.06 [The Exchange has determined that deliberate misrepresentation of an order will subject an OTP Holder or OTP Firm to disciplinary action.] *It will be a violation of a Floor Broker's duty to use due diligence in representing its Customer Order if a Floor Broker does not employ the Facilitation Procedure on the PCX immediately upon receipt on the PCX of the order that the OTP Holder or OTP Firm wishes to have executed as a facilitation cross.*

.07 It will be a violation of an OTP Holder or OTP Firm's duty of best execution to its customer if it were to cancel a Facilitation Order to avoid execution of the order at a better price. The availability of the Facilitation Procedure does not alter an OTP Holder or OTP Firm's best execution duty to get the best price for its customer. Accordingly, while facilitation orders can be cancelled prior to a trading crowd providing quotes in response to a request for a market, if an OTP Holder or OTP Firm were to cancel a Facilitation Order when there was a superior price available on the Exchange and subsequently re-enter the Facilitation Order at the same Facilitation Price after the better price was no longer available without attempting to obtain that better price for its customer, there would be a presumption that the OTP Holder or OTP Firm did so to avoid execution of its Customer Order in whole or in part by other brokers at the better price.

* * * * *

II. Self-Regulatory Organization's Statement of the Purpose of, and Statutory Basis for, the Proposed Rule Change

In its filing with the Commission, the Exchange included statements concerning the purpose of and basis for the proposed rule change and discussed any comments it received on the proposed rule change. The text of these statements may be examined at the places specified in item IV below. PCX has prepared summaries, set forth in sections A, B, and C below, of the most significant aspects of such statements.

A. Self-Regulatory Organization's Statement of the Purpose of, and Statutory Basis for, the Proposed Rule Change

1. Purpose

The facilitation crossing procedure as provided in PCX Rule 6.47(b) allows a Floor Broker who holds an order for a customer and an order for the proprietary account of an OTP (Options Trading Permit) Holder or OTP Firm representing that customer to cross those orders. The Exchange seeks to amend its facilitation crossing rules in order to ensure that the customer side of a facilitation cross will be executed in a facilitation cross if it is priced at or between markets quoted in response to a request for a market. Among other things, the proposal would also increase to 40% the guaranteed percentage of the customer order that a Floor Broker is entitled to cross at the quoted market. The Exchange represents that the proposed amendment to its facilitation crossing rules makes the Exchange's crossing rules more competitive and generally consistent with the crossing rules of other options exchanges.[4] Accordingly, the Exchange proposes to make the following changes to its rule:

Size of the Customer Order and Applicability

The current rule specifies that the size of the customer order subject to facilitation generally must be at least fifty contracts. The proposed rule change clarifies the rule's provision for orders for fewer than fifty contracts to state that such orders may be facilitated pursuant to the rule, but are not subject to the firm guarantees of the facilitation crossing rule and therefore must satisfy all orders in the book and orders represented in the trading crowd (affording the trading crowd a reasonable period of time to respond) before the Floor Broker may cross the order. The Exchange also seeks to expand the newly amended rule (''Facilitation Procedure'') to an organization under common control with a Lead Market Maker (''LMM'') that is representing the customer order. The proposed rule change would also amend the rule so that the Facilitation Procedure applies only to a cross of a proprietary order of an OTP Holder, OTP Firm, or organization under common control with an LMM with an order of a customer (''Customer Order''), meaning a customer that is not an OTP Holder, an OTP Firm or a broker-dealer.[5]

Vocalization Requirements

Currently, PCX Rule 6.47(b)(3) requires a Floor Broker to clearly disclose all components of a Customer Order and his or her intention to execute a facilitation cross transaction in the trading crowd. Once the crowd provides a quote, the quote remains in effect until (i) a reasonable amount of time has passed, (ii) there is a significant change in price of the underlying security, or (iii) the facilitation market has been improved. The Exchange seeks to amend the rule to eliminate the requirement that the Floor Broker specifically request a ''facilitation market'' and add the requirement that in calling for a market, the Floor Broker would have to reveal the size of the transaction in addition to the components of the order. The Exchange believes that the disclosure of the size of the transaction, including any components, will provide the crowd more information relevant to the decision-making process and enable the crowd to respond more expeditiously than disclosure of the fact that the Floor Broker is calling for a facilitation market.[6]

Facilitation Procedure and Allocation

PCX Rule 6.47(b)(4) provides the participation percentages to which a Floor Broker representing a facilitation cross is entitled. The rule currently provides that once a market has been established and all public customer orders represented in the trading crowd have been satisfied, the Floor Broker may cross either (i) 40% of any remaining contracts at a price between the trading crowd's quoted market, or (ii) 25% of the contracts at the trading crowd's best bid or offer.

The Exchange seeks to modify this rule in two respects: (i) to clearly delineate a Facilitation Procedure and (ii) to modify the guaranteed participation levels of the Floor Broker providing the facilitation order. The Exchange proposes that in response to

[4] *See, e.g.*, International Stock Exchange Rule 716.

[5] Telephone conversation between Mai S. Shiver, Director/Senior Counsel, PCX, and Ira L. Brandriss, Assistant Director, *et al.*, Division, Commission, July 22, 2004.

[6] According to the PCX, in eliminating the requirement that the Floor Broker specifically request a facilitation market, the proposed Facilitation Procedure reflects the Exchange's facilitation crossing rules that existed before the Exchange amended its current rules in May 2000. Telephone conversation between Mai S. Shiver, Director/Senior Counsel, PCX, and Ira L. Brandriss, Assistant Director, *et al.*, Division, Commission, July 14, 2004. *See also* Securities Exchange Act Release No. 42848 (May 26, 2000), 65 FR 36206 (June 7, 2000) (PCX 99–18).

the trading crowd's quoted market, the Floor Broker may immediately provide a bid (offer) price for the Customer Order, so long as the Floor Broker's price (''Facilitation Price'') is on or inside the quoted market provided by the trading crowd in response to the Floor Broker's request for a market. As proposed, once the Floor Broker provides a Facilitation Price and can satisfy all of the contingencies associated with the Customer Order, the Customer Order is deemed consummated at the Facilitation Price.

Once the facilitation process described above is achieved, the Exchange proposes to allocate the Customer Order in the following way: After first satisfying any orders for the account of persons who are not OTP Holders or OTP Firms pending at the Facilitation Price, the Floor Broker may facilitate up to 40% of the remaining Customer Order against the facilitation order at the Facilitation Price and must allow any other member of the trading crowd interested in trading at the Facilitation Price to execute the remaining 60% or more of the Customer Order. The allocation of the remaining Customer Order would be made on (i) a size pro-rata basis (the percentage of the orders that is the ratio of the size of the offers (bids) to the total size of the offers (bids) as described in 6.75(f)(6)); or (ii) an equal basis (in the case of identical offers (bids) as described in PCX Rule 6.75(c)) where the Floor Broker's bid (offer) improved the crowd's price in response to the request for a market. If after providing the crowd reasonable time to execute the remaining 60% of the Customer Order any amount of the Customer Order remains, the Floor Broker would be required to fill the remainder of the Customer Order by executing it against the Facilitation Order at the Facilitation Price.

The Exchange also proposes to add new PCX Rule 6.47(b)(5) to state that if the trading crowd does not provide a bid and offer for all components of the Customer Order in response to the Floor Broker's request within a reasonable period of time, the ''market quote'' for the purpose of this rule will be: (i) the quoted market disseminated by the Exchange prior to the commencement of the Facilitation Procedure, or (ii) for orders for which there is no disseminated market, the market for the order will be determined by the disseminated quote for each leg of the transaction prior to the commencement of the Facilitation Procedure. Once the Floor Broker provides a Facilitation Price and can satisfy all of the contingencies associated with the Customer Order, the Customer Order would be deemed consummated at the Facilitation Price. After satisfying the orders of any persons who are not OTP Holders or OTP Firms pending at the Facilitation Price, the Floor Broker would be permitted to facilitate up to 40% of the remaining Customer Order against the Facilitation Order at the Facilitation Price and would be required to allow any other member of the trading crowd interested in trading at the facilitation price to execute the remaining 60% or more of the Customer Order. After providing the crowd reasonable time to execute the remaining 60% of the Customer Order, the Floor Broker would be required to fill the remainder of the Customer Order by executing it against the Facilitation Order at the Facilitation Price.

Participation of Lead Market Makers

Currently, PCX Rule 6.47(b)(5) provides that if the facilitation trade occurs at the LMM's quoted bid or offer in its allocated issue, then the LMM's guaranteed participation level shall apply only to the number of contracts remaining after all public customer orders and firm facilitation orders being represented by the Floor Brokers have been satisfied. The rule further provides that the total amount of participation that any firm and/or LMM may receive as a guarantee may not exceed 40% of the Customer Order. If the trade occurs at a price other than the LMM's quoted bid or offer, the LMM is entitled to no guaranteed participation.

The Exchange seeks to renumber this rule as proposed PCX Rule 6.47(b)(6) and amend it to provide that if the facilitation trade occurs at the LMM's quoted bid or offer in their allocated issue and the Floor Broker takes less than 40% of the trade, then the LMM may elect either (i) to accept a guaranteed participation level of 40% minus the Floor Broker's allocation percentage, or (ii) to participate in the pro-rata allocation on a non-guarantee participation level. If the trade occurs at a price other than the LMM's quoted bid or offer, the LMM would be entitled to no ''guaranteed'' participation. The proposed rule would not prohibit a Floor Broker or LMM from trading more than their guaranteed participation levels if the members of the trading crowd do not choose to trade the remaining portion of the order.

Violative Conduct

Current Commentary .06 to PCX Rule 6.47 provides that the Exchange has determined that deliberate misrepresentation of an order will subject an OTP Holder or OTP Firm to disciplinary action. The Exchange seeks to replace this provision with new Commentaries .06 and .07, which expressly define the conduct that the Exchange deems to be in violation of existing Exchange rules. As proposed, new Commentary .06 provides that it will be a violation of a Floor Broker's duty to use due diligence in representing its Customer Order if the Floor Broker does not employ the Facilitation Procedure on the PCX immediately upon receipt on the PCX of the order that the OTP Holder or OTP Firm wishes to have executed as a facilitation cross.

The Exchange also proposes to add Commentary .07, which provides that it will be a violation of an OTP Holder's or OTP Firm's duty of best execution to its customer if it cancels a facilitation order for the purpose of avoiding execution of the order at a better price. The Exchange believes that the availability of the Facilitation Procedure does not alter an OTP Holder or OTP Firm's best execution duty to get the best price for its customer. Therefore, while facilitation orders can be cancelled prior to obtaining quotes from a trading crowd, an OTP Holder or OTP Firm that (i) cancels a facilitation order when there is a superior price available on the Exchange and (ii) subsequently reenters the facilitation order at the same Facilitation Price after the better price is no longer available and does not attempt to obtain that better price for its customer is presumed to have acted in violation of his or her duty of best execution.

2. Statutory Basis

The Exchange states that the basis under the Act for the proposed rule change is the requirement under section 6(b)(5) of the Act[7] that an exchange have rules that are designed to prevent fraudulent and manipulative acts and practices, to promote just and equitable principles of trade, to remove impediments to and perfect the mechanism of a free and open market and a national market system, and, in general, to protect investors and the public interest.

B. Self-Regulatory Organization's Statement on Burden on Competition

The Exchange does not believe that the proposed rule change will impose any burden on competition that is not necessary or appropriate in furtherance of the purposes of the Act.

C. Self-Regulatory Organization's Statement on Comments on the

[7] 15 U.S.C. 78f(b)(5).

Proposed Rule Change Received From Members, Participants, or Others

Written comments on the proposed rule change were neither solicited nor received.

III. Date of Effectiveness of the Proposed Rule Change and Timing for Commission Action

Within 35 days of the date of publication of this notice in the **Federal Register** or within such longer period (i) as the Commission may designate up to 90 days of such date if it finds such longer period to be appropriate and publishes its reasons for so finding or (ii) as to which the Exchange consents, the Commission will:

(A) By order approve such proposed rule change or

(B) Institute proceedings to determine whether the proposed rule change should be disapproved.

IV. Solicitation of Comments

Interested persons are invited to submit written data, views, and arguments concerning the foregoing, including whether the proposed rule change is consistent with the Act. Comments may be submitted by any of the following methods:

Electronic comments:

- Use the Commission's Internet comment form (*http://www.sec.gov/rules/sro.shtml*); or
- Send an e-mail to *rule-comments@sec.gov*. Please include File Number SR-PCX–2003–64 on the subject line.

Paper Comments

- Send paper comments in triplicate to Jonathan G. Katz, Secretary, Securities and Exchange Commission, 450 Fifth Street, NW., Washington, DC 20549–0609.

All submissions should refer to File Number SR–PCX–2003–64. This file number should be included on the subject line if e-mail is used. To help the Commission process and review your comments more efficiently, please use only one method. The Commission will post all comments on the Commission's Internet Web site (*http://www.sec.gov/rules/sro.shtml*). Copies of the submission, all subsequent amendments, all written statements with respect to the proposed rule change that are filed with the Commission, and all written communications relating to the proposed rule change between the Commission and any person, other than those that may be withheld from the public in accordance with the provisions of 5 U.S.C. 552, will be available for inspection and copying in the Commission's Public Reference Room. Copies of such filing also will be available for inspection and copying at the principal office of the Exchange. All comments received will be posted without change; the Commission does not edit personal identifying information from submissions. You should submit only information that you wish to make available publicly. All submissions should refer to File Number SR–PCX–2003–64 and should be submitted on or before August 19, 2004.

For the Commission, by the Division of Market Regulation, pursuant to delegated authority.[8]

Margaret H. McFarland,

Deputy Secretary.

[FR Doc. 04–17291 Filed 7–28–04; 8:45 am]

BILLING CODE 8010–01–P

SECURITIES AND EXCHANGE COMMISSION

[Release No. 34–50066; File No. SR–PCX–2004–69]

Self-Regulatory Organizations; Notice of Filing and Immediate Effectiveness of Proposed Rule Change by the Pacific Exchange, Inc. Relating to PCX Plus Priority and Order Allocation Procedures

July 22, 2004.

Pursuant to section 19(b)(1) of the Securities Exchange Act of 1934 (''Act'')[1] and Rule 19b–4 thereunder,[2] notice is hereby given that on July 16, 2004, the Pacific Exchange, Inc. (''PCX'' or ''Exchange'') filed with the Securities and Exchange Commission (''Commission'') the proposed rule change as described in items I, II, and III below, which items have been prepared by the Exchange. Pursuant to section 19(b)(3)(A)(iii) of the Act[3] and Rule 19b–4(f)(3) thereunder,[4] PCX has designated this proposal as one concerned solely with the administration of the self-regulatory organization, which renders the proposal effective upon filing with the Commission. The Commission is publishing this notice to solicit comments on the proposed rule change from interested persons.

I. Self-Regulatory Organization's Statement of the Terms of Substance of the Proposed Rule Change

PCX is proposing to amend PCX Rule 6.76 Commentary .02, governing PCX Plus Priority and Order Allocation Procedures in order to extend the date when PCX Plus will support Floor Broker interaction with Electronic Book Executions (''EBEs'') via System Alert Messages (''SAMs'') from June 30, 2004, until December 31, 2004.

The text of the proposed rule change is available at PCX and at the Commission.

II. Self-Regulatory Organization's Statement of the Purpose of, and Statutory Basis for, the Proposed Rule Change

In its filing with the Commission, PCX included statements concerning the purpose of and basis for the proposed rule change and discussed any comments it received on the proposed rule change. The text of these statements may be examined at the places specified in item IV below. PCX has prepared summaries, set forth in sections A, B, and C below, of the most significant aspects of such statements.

A. Self-Regulatory Organization's Statement of the Purpose of, and Statutory Basis for, the Proposed Rule Change

1. Purpose

The Exchange is proposing to amend PCX Rule 6.76 Commentary .02 governing PCX Plus Priority and Order Allocation Procedures. PCX Plus is the Exchange's electronic order delivery, execution and reporting system for designated option issues through which orders and Quotes with Size[5] are consolidated for execution and/or display. The trading system includes an electronic communications network that enables registered Market Makers to enter orders/Quotes with Size and execute transactions from remote locations or the Trading floor. As proposed, the Exchange seeks to extend the date by which it will provide the functionality to support Floor Broker interaction with EBEs via SAMs from June 30, 2004, until December 31, 2004. The Exchange represents that this extension is warranted in order to afford the PCX sufficient time to add this functionality. Extending the deadline for this functionality until December 31, 2004, will allow the Exchange to add this functionality after the Exchange has addressed any capacity issues the

---

[8] 17 CFR 200.30–3(a)(12).

[1] 15 U.S.C. 78s(b)(1).

[2] 17 CFR 240.19b–4.

[3] 15 U.S.C. 78s(b)(3)(A)(iii).

[4] 17 CFR 240.19b–4(f)(3).

[5] *See* PCX Rule 6.1(b)(33) (definition of Quotes with Size).

system may have as a result of phasing in issues currently traded on the Exchange and adding new issues to be traded on the Exchange.

2. Statutory Basis

The Exchange believes that the proposed rule change is consistent with section 6(b)[6] of the Act, in general, and furthers the objectives of section 6(b)(5),[7] in particular, in that it is designed to facilitate transactions in securities, to promote just and equitable principles of trade, to enhance competition and to protect investors and the public interest.

B. Self-Regulatory Organization's Statement on Burden on Competition

The Exchange does not believe that the proposed rule change will impose any burden on competition that is not necessary or appropriate in furtherance of the purposes of the Act.

C. Self-Regulatory Organization's Statement on Comments on the Proposed Rule Change Received From Members, Participants, or Others

Written comments were neither solicited nor received.

III. Date of Effectiveness of the Proposed Rule Change and Timing for Commission Action

The foregoing rule change has become effective pursuant to section 19(b)(3)(A)(iii) of the Act[8] and Rule 19b–4(f)(3) thereunder[9] in that it is concerned solely with the administration of the self-regulatory organization. At any time within 60 days of the filing of such proposed rule change, the Commission may summarily abrogate the rule change if it appears to the Commission that such action is necessary or appropriate in the public interest, for the protection of investors, or otherwise in furtherance of the purposes of the Act.

IV. Solicitation of Comments

Interested persons are invited to submit written data, views, and arguments concerning the foregoing, including whether the proposed rule change is consistent with the Act. Comments may be submitted by any of the following methods:

Electronic Comments

- Use the Commission's Internet comment form (*http://www.sec.gov/rules/sro.shtml*); or
- Send an e-mail to *rule-comments@sec.gov.* Please include File No. SR–PCX–2004–69 on the subject line.

Paper Comments

- Send paper comments in triplicate to Jonathan G. Katz, Secretary, Securities and Exchange Commission, 450 Fifth Street, NW., Washington, DC 20549–0609.

All submissions should refer to File No. SR–PCX–2004–69. This file number should be included on the subject line if e-mail is used. To help the Commission process and review your comments more efficiently, please use only one method. The Commission will post all comments on the Commission's Internet Web site (*http://www.sec.gov/rules/sro.shtml*). Copies of the submission, all subsequent amendments, all written statements with respect to the proposed rule change that are filed with the Commission, and all written communications relating to the proposed rule change between the Commission and any person, other than those that may be withheld from the public in accordance with the provisions of 5 U.S.C. 552, will be available for inspection and copying in the Commission's Public Reference Section, 450 Fifth Street, NW., Washington, DC 20549. Copies of such filing also will be available for inspection and copying at the principal office of PCX. All comments received will be posted without change; the Commission does not edit personal identifying information from submissions. You should submit only information that you wish to make available publicly. All submissions should refer to File No. SR–PCX–2004–69 and should be submitted on or before August 19, 2004.

For the Commission, by the Division of Market Regulation, pursuant to delegated authority.[10]

Margaret H. McFarland,

Deputy Secretary.

[FR Doc. 04–17292 Filed 7–28–04; 8:45 am]

BILLING CODE 8010–01–P

[6] 15 U.S.C. 78f(b).

[7] 15 U.S.C. 78f(b)(5).

[8] 15 U.S.C. 78s(b)(3)(A)(iii).

[9] 17 CFR 240.19b–4(f)(3).

[10] 17 CFR 200.30–3(a)(12).

SECURITIES AND EXCHANGE COMMISSION

[Release No. 34–50070; File No. SR–Phlx–2004–46]

Self-Regulatory Organizations; Notice of Filing and Order Granting Accelerated Approval of Proposed Rule Change by the Philadelphia Stock Exchange, Inc. Relating to a Pilot Program to Deploy the Options Floor Broker Management System

July 23, 2004.

Pursuant to section 19(b)(1) of the Securities Exchange Act of 1934 (''Act'')[1], and Rule 19b-4[2] thereunder, notice is hereby given that on July 20, 2004, the Philadelphia Stock Exchange, Inc. (''Phlx'' or ''Exchange'') filed with the Securities and Exchange Commission (''SEC'' or ''Commission'') the proposed rule change as described in items I and II below, which items have been prepared by the Phlx. The Commission is publishing this notice to solicit comments on the proposed rule change from interested persons and to approve the proposal, on an accelerated basis.

I. Self-Regulatory Organization's Statement of the Terms of Substance of the Proposed Rule Change

The Exchange proposes to extend its pilot program pertaining to the Options Floor Broker Management System (the ''System'') from August 2, 2004 until March 1, 2005.[3] The System is a new

[1] 15 U.S.C. 78s(b)(1).

[2] 17 CFR 240.19b-4.

[3] On July 31, 2003, the Exchange filed a proposed rule change to implement a pilot program to deploy the Exchange's new System. The proposed rule change was noticed, and accelerated approval was granted thereto, on July 31, 2003. The pilot was scheduled to expire on August 29, 2003. *See* Securities Exchange Act Release No. 48266 (July 31, 2003), 68 FR 152 (August 7, 2003) (SR–Phlx-2003–56). On August 29, the Commission extended the pilot to September 12, 2003. *See* Securities Exchange Act Release No. 48425 (August 29, 2003), 68 FR 53210 (September 9, 2003) (SR–Phlx-2003–60). On September 12, 2003, the Commission extended the pilot again until November 14, 2003. *See* Securities Exchange Act Release No. 48490 (September 12, 2003), 68 FR 54926 (September 19, 2003) (SR–Phlx-2003–64). On December 18, 2003, the Commission extended the pilot until February 6, 2004. *See* Securities Exchange Act Release No. 48947 (December 18, 2003), 68 FR 75012 (December 29, 2003) (SR–Phlx-2003–81). On February 3, 2004, the Commission extended the pilot until August 2, 2004. *See* Securities Exchange Act Release No. 49178 (February 3, 2004), 69 FR 6360 (February 10, 2004) (SR–Phlx-2004–10). In order to avoid a lapse in the effectiveness of this pilot, the Commission now is approving the Exchange's proposal to extend the rule from August 2, 2004 until March 1, 2005. The Exchange has also filed for permanent approval of the proposed rules. *See* Securities Exchange Act Release No. 48265 (July 31, 2003), 68 FR 47137 (August 7, 2003) (SR–Phlx-2003–40). The Exchange

Continued

component of the Exchange's Automated Options Market (AUTOM) and Automatic Execution (AUTO–X) System.[4]

II. Self-Regulatory Organization's Statement of the Purpose of, and Statutory Basis for, the Proposed Rule Change

In its filing with the Commission, the Phlx included statements concerning the purpose of, and basis for, the proposed rule change and discussed any comments it received on the proposed rule change. The text of these statements may be examined at the places specified in item III below. The Phlx has prepared summaries, set forth in sections A, B, and C below, of the most significant aspects of such statements.

A. Self-Regulatory Organization's Statement of the Purpose of, and Statutory Basis for, the Proposed Rule Change

1. Purpose

The purpose of the proposed rule change is to extend the effectiveness of the rules governing the System through March 1, 2005, in order to continue to have rules in place concerning the System and to ensure that Floor Brokers using the System during the continuing deployment would not be in violation of current Exchange rules regarding ticket-marking requirements. The rules had previously been effective through August 29, 2003, extended through September 12, 2003, November 14, 2003, February 6, 2004 and August 2, 2004.[5]

The System is designed to enable Floor Brokers and/or their employees to enter, route and report transactions stemming from options orders received on the Exchange. Floor Brokers or their employees access the System through an electronic Exchange-provided handheld device on which they have the ability to enter the required information as set forth in Phlx Rule 1063(e), either from their respective posts on the options trading floor or in the trading crowd. The System replaced the Exchange's Floor Broker Order Entry System (''FBOE''),[6] and is currently in use floor-wide.

All of the rules pertaining to the System effective February 6, 2004 are proposed to be extended until March 1, 2005, including: Rules 1014(g), 1015, 1051, 1063, 1064, and 1080.06, as well as Option Floor Procedure Advices (''Advice'') A–11, B–6, B–8, C–2, C–3, F–1, F–2, and F–4.

The Exchange believes that the System enables Floor Brokers to handle orders they represent more efficiently, and will further enable the Exchange to comply with the audit trail requirement for non-electronic orders required under the Order Instituting Public Administrative Proceedings Pursuant to Section 19(h)(1) of the Securities Exchange Act of 1934, Making Findings and Imposing Sanctions.[7]

2. Statutory Basis

The Exchange believes that the proposed rule change is consistent with section 6(b) of the Act[8] in general, and furthers the objectives of section 6(b)(5) of the Act[9] in particular, in that it is designed to promote just and equitable principles of trade, remove impediments to and perfect the mechanisms of a free and open market and a national market system, and to protect investors and the public interest, by providing a System that enables Floor Brokers to handle orders they represent more efficiently, while enabling the Exchange to comply with the requirement in the Order to provide an electronic audit trail for non-electronic orders entered on the Exchange.

B. Self-Regulatory Organization's Statement on Burden on Competition

The Exchange does not believe that the proposed rule change will impose any inappropriate burden on competition.

C. Self-Regulatory Organization's Statement on Comments on the Proposed Rule Change Received From Members, Participants, or Others

No written comments were either solicited or received.

III. Solicitation of Comments

Interested persons are invited to submit written data, views, and arguments concerning the foregoing, including whether the proposed rule change is consistent with the Act. Comments may be submitted by any of the following methods:

Electronic Comments

- Use the Commission's Internet comment form (*http://www.sec.gov/rules/sro.shtml*); or
- Send an e-mail to *rule-comments@sec.gov.* Please include File Number SR–Phlx-2004–46 on the subject line.

Paper comments

- Send paper comments in triplicate to Jonathan G. Katz, Secretary, Securities and Exchange Commission, 450 Fifth Street, NW., Washington, DC 20549–0609.

All submissions should refer to File Number SR–Phlx-2004–46. This file number should be included on the subject line if e-mail is used. To help the Commission process and review your comments more efficiently, please use only one method. The Commission will post all comments on the Commission's Internet Web site (*http://www.sec.gov/rules/sro.shtml*). Copies of the submission, all subsequent amendments, all written statements with respect to the proposed rule change that are filed with the Commission, and all written communications relating to the proposed rule change between the Commission and any person, other than those that may be withheld from the public in accordance with the provisions of 5 U.S.C. 552, will be available for inspection and copying in the Commission's Public Reference Section, 450 Fifth Street, NW., Washington, DC 20549. Copies of such filing also will be available for inspection and copying at the principal offices of the Phlx. All comments received will be posted without change; the Commission does not edit personal identifying information from submissions. You should submit only information that you wish to make available publicly. All submissions should refer to File Number SR–Phlx-2004–46 and should be submitted on or before August 19, 2004.

---

acknowledges that SR–Phlx-2003–40 and Amendment No. 1 thereto are subject to public comment, which may result in amendments to the proposed rules.

[4] AUTOM is the Exchange's electronic order delivery, routing, execution and reporting system, which provides for the automatic entry and routing of equity option and index option orders to the Exchange trading floor. Orders delivered through AUTOM may be executed manually, or certain orders are eligible for AUTOM's automatic execution feature, AUTO–X. Equity option and index option specialists are required by the Exchange to participate in AUTOM and its features and enhancements. Option orders entered by Exchange members into AUTOM are routed to the appropriate specialist unit on the Exchange trading floor. *See* Exchange Rule 1080.

[5] *See* note 3, *supra*.

[6] *See* Securities Exchange Act Release No. 41524 (June 14, 1999), 64 FR 33127 (June 21, 1999) (SR–Phlx-99–11). The FBOE, a component of AUTOM, currently provides a means for (but does not require) Floor Brokers to route eligible orders to the specialist's post, consistent with the order delivery criteria of the AUTOM System set forth in Exchange Rule 1080(b). The new System would include the same functionality as the FBOE, in addition to providing an electronic audit trail for non-electronic orders received by Floor Brokers by way of the entry of the required information in proposed Rule 1063(e).

[7] *See* Securities Exchange Act Release No. 43268 (September 11, 2000) and Administrative Proceeding File 3–10282 (the ''Order'').

[8] 15 U.S.C. 78f(b).

[9] 15 U.S.C. 78f(b)(5).

IV. Discussion

After careful review, the Commission finds that the proposed rule change is consistent with the requirements of the Act and the rules and regulations thereunder applicable to a national securities exchange.[10] In particular the Commission finds that the proposed rule to extend a pilot program establishing rules governing the use of the System by floor brokers on the Exchange is consistent with section 6(b)(5) of the Act, which requires that the rules of an exchange be designed to promote just and equitable principles of trade, remove impediments to and perfect the mechanism of a free and open market and a national securities system, and protect investors and the public interest.[11]

The Commission finds good cause for approving the proposed rule change prior to the thirtieth day after the date of the publication of notice thereof in the **Federal Register**. The Commission believes that granting accelerated approval to the proposed rule change on a pilot basis will allow the Exchange to have enforceable rules governing use of the Exchange's new System in effect prior to permanent approval of the rules, and will help ensure that members are properly trained and familiar with the rules. In addition, that Commission is granting accelerated approval in order to prevent a lapse in the effectiveness of the Exchange's rules governing operation of the System to ensure continuity of the pilot.

V. Conclusion

It is therefore ordered, pursuant to section 19(b)(2) of the Act,[12] that the proposed rule change (SR–Phlx-2004–46) is approved on an accelerated basis on a pilot basis until March 1, 2005.

For the Commission, by the Division of Market Regulation, pursuant to delegated authority.[13]

Margaret H. McFarland,

Deputy Secretary.

[FR Doc. 04–17289 Filed 7–28–04; 8:45 am]

BILLING CODE 8010–01–P

[10] In approving this proposed rule change, the Commission notes that it has also considered the proposed rule's impact on efficiency, competition, and capital formation. 15 U.S.C. 78c(f).

[11] 15 U.S.C. 78f(b)(5).

[12] 15 U.S.C. 78f(b)(2).

[13] 17 CFR 200.30–3(a)(12).

SMALL BUSINESS ADMINISTRATION

Reporting and Recordkeeping Requirements Under OMB Review

AGENCY: Small Business Administration.

ACTION: Notice of reporting requirements submitted for OMB review.

SUMMARY: Under the provisions of the Paperwork Reduction Act (44 U.S.C. chapter 35), agencies are required to submit proposed reporting and recordkeeping requirements to OMB for review and approval, and to publish a notice in the **Federal Register** notifying the public that the agency has made such a submission.

DATES: Submit comments on or before August 30, 2004. If you intend to comment but cannot prepare comments promptly, please advise the OMB Reviewer and the Agency Clearance Officer before the deadline.

Copies: Request for clearance (OMB 83–1), supporting statement, and other documents submitted to OMB for review may be obtained from the Agency Clearance Officer.

ADDRESSES: Address all comments concerning this notice to: Agency Clearance Officer, Jacqueline White, Small Business Administration, 409 3rd Street, SW., 5th Floor, Washington, DC 20416; and *David_Rostker@omb.eop.gov,* fax number (202) 395–7285 Office of Information and Regulatory Affairs, Office of Management and Budget.

FOR FURTHER INFORMATION CONTACT: Jacqueline White, Agency Clearance Officer, (202) 205–7044.

SUPPLEMENTARY INFORMATION:

Title: 8(a) Annual Update.

Form No.: 1450.

Frequency: On Occasion.

Description of Respondents: 8(a) Business Owners.

Responses: 6,700.

Annual Burden: 13,400.

Jacqueline K. White,

Chief, Administrative Information Branch.

[FR Doc. 04–17233 Filed 7–28–04; 8:45 am]

BILLING CODE 8025–01–P

DEPARTMENT OF STATE

[Public Notice 4792]

Culturally Significant Objects Imported for Exhibition Determinations: ''Ten Masterpieces From the Treasury of the State Hermitage Museum''

AGENCY: Department of State.

ACTION: Notice.

SUMMARY: Notice is hereby given of the following determinations: Pursuant to the authority vested in me by the Act of October 19, 1965 (79 Stat. 985; 22 U.S.C. 2459), Executive Order 12047 of March 27, 1978, the Foreign Affairs Reform and Restructuring Act of 1998 (112 Stat. 2681, *et seq.*; 22 U.S.C. 6501 note, *et seq.*), Delegation of Authority No. 234 of October 1, 1999, Delegation of Authority No. 236 of October 19, 1999, as amended, and Delegation of Authority No. 257 of April 15, 2003 [68 FR 19875], I hereby determine that the objects to be included in the exhibition ''Ten Masterpieces From the Treasury of the State Hermitage Museum,'' imported from abroad for temporary exhibition within the United States, are of cultural significance. The objects are imported pursuant to a loan agreement with a foreign owner. I also determine that the exhibition or display of the exhibit objects at Sotheby's, Inc., New York, NY, from on or about September 20, 2004, to on or about September 27, 2004, and at possible additional venues yet to be determined, is in the national interest. Public Notice of these Determinations is ordered to be published in the **Federal Register**.

FOR FURTHER INFORMATION CONTACT: For further information, including a list of the exhibit objects, contact Julianne Simpson, Attorney-Adviser, Office of the Legal Adviser, U.S. Department of State, (telephone: 202/619–6529). The address is U.S. Department of State, SA–44, 301 4th Street, SW., Room 700, Washington, DC 20547–0001.

Dated: July 22, 2004.

C. Miller Crouch,

Principal Deputy Assistant Secretary for Educational and Cultural Affairs, Department of State.

[FR Doc. 04–17315 Filed 7–28–04; 8:45 am]

BILLING CODE 4710–08–P

DEPARTMENT OF STATE

[Public Notice 4665]

Defense Trade Advisory Group; Notice of Open Meeting

AGENCY: Department of State.

ACTION: Notice.

The Defense Trade Advisory Group (DTAG) will meet in open session from 9 a.m. to 12 noon on Tuesday, September 21, 2004, in the Loy Henderson Conference Room, at the U.S. Department of State, Harry S. Truman Building, 2201 C Street NW., Washington, DC. Entry and registration will begin at 8:15. Please use the building entrance located at 23rd Street, NW., Washington, DC between C&D Streets. The membership of this advisory committee consists of private sector defense trade specialists, appointed by the Assistant Secretary of State for Political-Military Affairs, who

advise the Department on policies, regulations, and technical issues affecting defense trade. The purpose of the meeting will be to review progress of the working groups and to discuss current defense trade issues and topics for further study.

Although public seating will be limited due to the size of the conference room, members of the public may attend this open session as seating capacity allows, and will be permitted to participate in the discussion in accordance with the Chairman's instructions. Members of the public may, if they wish, submit a brief statement to the committee in writing.

As access to the Department of State facilities is controlled, persons wishing to attend the meeting must notify the DTAG Executive Secretariat by COB Monday, September 13, 2004. If notified after this date, the DTAG Secretariat cannot guarantee that State's Bureau of Diplomatic Security can complete the necessary processing required to attend the September 21 plenary.

Each non-member observer or DTAG member needing building access that wishes to attend this plenary session should provide his/her name, company or organizational affiliation, phone number, date of birth, social security number, and citizenship to the DTAG Secretariat, contact person Mary Sweeney via e-mail at *SweeneyMF@state.gov.* DTAG members planning to attend the plenary session should notify the DTAG Secretariat, contact person Mary Sweeney via e-mail at *SweeneyMF@state.gov.* A list will be made up for Diplomatic Security and the Reception Desk at the C Street Entrance. Attendees must present a driver's license with photo, a passport, a U.S. Government ID, or other valid photo ID for entry.

FOR FURTHER INFORMATION CONTACT: Mary F. Sweeney, DTAG Secretariat, U.S. Department of State, Office of Defense Trade Controls Management (PM/DTCM), Room 1200, SA–1, Washington, DC 20522–0112, (202) 663–2865, FAX (202) 663–261–8199.

Dated: July 21, 2004.

Michael T. Dixon,

Executive Secretary, Defense Trade Advisory Group, Department of State.

[FR Doc. 04–17310 Filed 7–28–04; 8:45 am]

BILLING CODE 4710–25–P

DEPARTMENT OF STATE

[Public Notice 4775]

Shipping Coordinating Committee; Notice of Meetings

The Working Group on Radio Communications and Search and Rescue of the Subcommittee on Safety of Life at Sea will conduct open meetings at 1 PM on Thursday August 19 (Room 3200), and 9 a.m. on September 23 (Room 6244–46), October 14 (Room 6244–46), November 18 and December 16, 2004 and January 13, 2005.

The meetings will be held at the Department of Transportation Headquarters Building, 400 Seventh Street SW., Washington, DC 20950. Call the point of contact below for room numbers. The purpose of this meeting is to prepare for the Ninth Session of the International Maritime Organization (IMO) Subcommittee on Radiocommunications and Search and Rescue, which is scheduled for the week of February 7–11, 2005, at IMO headquarters in London, England.

The primary matters to be considered are:

—Maritime Safety Information for GMDSS
—Development of a procedure for recognition of mobile satellite systems
—Large passenger ship safety
—Emergency radio communications, including false alerts and interference
—Issues related to maritime security
—Matters concerning Search and Rescue
—Developments in maritime radiocommunication systems and technology
—Planning for the 10th session of COMSAR

Members of the public may attend these meetings up to the seating capacity of the rooms. Interested persons may seek information, including meeting room numbers, or by writing: Mr. Russell S. Levin, U.S. Coast Guard Headquarters, Commandant (CG–622), Room 6611, 2100 Second Street, SW., Washington, DC 20593–0001, by calling: (202) 267–1389, or by sending Internet electronic mail to *rlevin@comdt.uscg.mil* and viewing *http://www.navcen.uscg.gov/marcomms/imo/meetings.htm.*

Dated: July 21, 2004.

Clay Diamond,

Executive Secretary, Shipping Coordinating Committee, Department of State.

[FR Doc. 04–17311 Filed 7–28–04; 8:45 am]

BILLING CODE 4710–09–P

DEPARTMENT OF STATE

[Public Notice 4776]

Shipping Coordinating Committee; Notice of Meeting

The Shipping Coordinating Committee (SHC) will conduct an open meeting at 9:30 a.m. on Tuesday, September 28, 2004, in Room 2415 of the United States Coast Guard Headquarters Building, 2100 2nd Street SW., Washington, DC, 20593–0001. The primary purpose of the meeting is to prepare for the 52nd Session of the International Maritime Organization (IMO) Marine Environment Protection Committee (MEPC) to be held at IMO Headquarters in London, England from October 11 to 15, 2004.

The primary matters to be considered include:

—Harmful aquatic organisms in ballast water;
—Recycling of ships;
—Prevention of air pollution from ships;
—Consideration and adoption of amendments to mandatory instruments;
—Interpretations and amendments of MARPOL 73/78 and related instruments;
—Implementation of the OPRC Convention and the OPRC-HNS Protocol and relevant conference resolutions;
—Identification and protection of Special Areas and Particularly Sensitive Sea Areas;
—Inadequacy of reception facilities;
—Voluntary IMO Member State Audit Scheme;
—Follow-up to the revised MARPOL Annex I and Annex II;
—Harmful anti-fouling systems for ships;
—Promotion of implementation and enforcement of MARPOL 73/78 and related instruments;
—Follow-up to UNCED and WSSD;
—Technical Cooperation Program;
—Future role of formal safety assessment and human element issues; and
—Work program of the Committee and subsidiary bodies.

Please note that hard copies of documents associated with MEPC 52 will not be available at this meeting. Documents will be available in Adobe Acrobat format on CD-ROM. To request documents please write to the address provided below, or request documents via the following Internet link: *http://www.uscg.mil/hq/gm/mso/mso4/mepc.html.*

Members of the public may attend this meeting up to the seating capacity

of the room. Interested persons may seek information by writing to Ensign Christina Paruzynski, Commandant (G–MSO–4), U.S. Coast Guard Headquarters, 2100 Second Street SW., Room 1601, Washington, DC 20593–0001 or by calling (202) 267–2079.

Dated: July 21, 2004.

Clay Diamond,

Executive Secretary, Shipping Coordinating Committee, Department of State.

[FR Doc. 04–17313 Filed 7–28–04; 8:45 am]

BILLING CODE 4710–09–P

DEPARTMENT OF STATE

[Public Notice 4777]

Shipping Coordinating Committee; Notice of Meeting

The U.S. Shipping Coordinating Committee (SHC) will conduct an open meeting at 10 a.m. on Wednesday, 20 October 2004 in Room 4342 at the Department of Transportation, 400 7th & D Streets, SW., Washington, DC 20590–0001. The purpose of this meeting is to prepare for the Eighty-Ninth Session of the International Maritime Organization's (IMO) Legal Committee (LEG 89) scheduled from 25–29 October 2004.

The provisional LEG 89 agenda calls for the Legal Committee to review the Convention for the Suppression of Unlawful Acts against the Safety of Maritime Navigation, 1988, and its Protocol of 1988 relating to Fixed Platforms Located on the Continental Shelf (SUA Convention and Protocol). Also the Committee will examine the draft Wreck Removal Convention. To be addressed as well is the Provision of Financial Security which includes a progress report on the work of the Joint IMO/ILO Ad Hoc Expert Working Group on Liability and Compensation regarding claims for Death, Personal Injury and Abandonment of Seafarers; and includes follow-up resolutions adopted by the International Conference on the Revision of the Athens Convention relating to the Carriage of Passengers and their Luggage by Sea, 1974. The Legal Committee will examine places of refuge, measures to protect crews and passengers against crimes committed on vessels, fair treatment of seafarers, as well as monitoring of the implementation of the HNS Convention, matters arising from the ninety-second session of the Council. Finally the committee will review technical cooperation: subprogramme for maritime legislation, review the status of Conventions and other treaty instruments adopted as a result of the work of the Legal Committee, in addition to allotting time to address any other issues that may arise on the Legal Committee's work program.

Members of the public are invited to attend the SHC meeting up to the seating capacity of the room. To facilitate the building security process, those who plan to attend should call or send an e-mail two days before the meeting. Upon request, participating by phone may be an option. For further information please contact Captain William Baumgartner or Lieutenant Martha Rodriguez, at U.S. Coast Guard, Office of Maritime and International Law (G-LMI), 2100 Second Street, S.W., Washington, D.C. 20593–0001; e-mail *mrodriguez@comdt.uscg.mil*, telephone (202) 267–1527; fax (202) 267–4496.

Dated: July 21, 2004.

Clay Diamond,

Executive Secretary, Shipping Coordinating Committee, Department of State.

[FR Doc. 04–17314 Filed 7–28–04; 8:45 am]

BILLING CODE 4710–09–P

OFFICE OF THE UNITED STATES TRADE REPRESENTATIVE

Request for Comments and Notice of Public Hearing Concerning China's Compliance With WTO Commitments

AGENCY: Office of the United States Trade Representative.

ACTION: Request for comments and notice of public hearing concerning China's compliance with its WTO commitments.

SUMMARY: The interagency Trade Policy Staff Committee (TPSC) will convene a public hearing and seek public comment to assist the Office of the United States Trade Representative (USTR) in its preparation of its annual report to the Congress on China's compliance with the commitments that it made in connection with its accession to the World Trade Organization (WTO).

DATES: Persons wishing to testify orally at the hearing must provide written notification of their intention, as well as a copy of their testimony, by noon, Friday, September 10, 2004. Written comments are due by noon, Wednesday, September 15, 2004. A hearing will be held in Washington, DC, on Thursday, September 23, 2004.

ADDRESSES: *Submissions by electronic mail: FR0437@ustr.eop.gov.*

Submissions by facsimile: Gloria Blue, Executive Secretary, Trade Policy Staff Committee, Office of the United States Trade Representative, (202) 395–6143.

The public is strongly encouraged to submit documents electronically rather than by facsimile. (See requirements for submissions below.)

FOR FURTHER INFORMATION CONTACT: For procedural questions concerning written comments or participation in the public hearing, contact Gloria Blue, (202) 395–3475. All other questions should be directed to Terrence J. McCartin, Director of Monitoring and Enforcement for China, (202) 395–3900, or Bruce Hirsh, Deputy Assistant U.S. Trade Representative for Monitoring and Enforcement, (202) 395–3582.

SUPPLEMENTARY INFORMATION:

1. Background

China became a member of the WTO on December 11, 2001. In accordance with section 421 of the U.S.-China Relations Act of 2000 (P.L. 106–286), USTR is required to submit, by December 11 of each year, a report to Congress on China's compliance with commitments made in connection with its accession to the WTO, including both multilateral commitments and any bilateral commitments made to the United States. In accordance with section 421, and to assist it in preparing this year's report, the TPSC is hereby soliciting public comment. Last year's report is available on USTR's Internet Web site (at *www.ustr.gov/regions/china-hk-mongolia-taiwan*).

The terms of China's accession to the WTO are contained in the Protocol on the Accession of the People's Republic of China (including its annexes) (Protocol), the Report of the Working Party on the Accession of China (Working Party Report), and the WTO Agreement. The Protocol and Working Party Report can be found on the Department of Commerce Web page, *http://www.mac.doc.gov/China/WTOAccessionPackage.htm*, or on the WTO Web site, *http://docsonline.wto.org* (document symbols: WT/L/432, WT/MIN(01)/3, WT/MIN(01)/3/Add.1, WT/MIN(01)/3/Add.2).

2. Public Comment and Hearing

USTR invites written comments and/or oral testimony of interested persons on China's compliance with commitments made in connection with its accession to the WTO, including, but not limited to, commitments in the following areas: (a) Trading rights; (b) import regulation (*e.g.*, tariffs, tariff-rate quotas, quotas, import licenses); (c) export regulation; (d) internal policies affecting trade (*e.g.*, subsidies, standards and technical regulations, sanitary and phytosanitary measures, trade-related

investment measures, taxes and charges levied on imports and exports); (e) intellectual property rights (including intellectual property enforcement); (f) services; (g) rule of law issues (*e.g.*, transparency, judicial review, uniform administration of laws and regulations) and status of legal reform; and (h) other WTO commitments. Persons submitting written comments should identify the commitments discussed therein by listing one or more of these categories on the first page of the comments.

Written comments must be received no later than noon, Wednesday, September 15, 2004.

A hearing will be held on Thursday, September 23, 2004, in Room 1, 1724 F Street, NW., Washington, DC 20508. If necessary, the hearing will continue on the next day.

Persons wishing to testify orally at the hearing must provide written notification of their intention by noon, Friday, September 10, 2004. The notification should include: (1) the name, address, and telephone number of the person presenting the testimony; and (2) a short (one or two paragraph) summary of the presentation, including the commitments at issue and, as applicable, the product(s) (with HTSUS numbers), service sector(s), or other subjects to be discussed. A copy of the testimony must accompany the notification. Remarks at the hearing should be limited to no more than five minutes to allow for possible questions from the TPSC.

All documents should be submitted in accordance with the instructions in section 3 below.

3. Requirements for Submissions

In order to facilitate prompt processing of submissions, USTR strongly urges and prefers electronic (e-mail) submissions in response to this notice. In the event that an e-mail submission is impossible, submissions should be made by facsimile.

Persons making submissions by e-mail should use the following subject line: ''China WTO'' followed by (as appropriate) ''Written Comments,'' ''Notice of Testimony,'' or ''Testimony.'' Documents should be submitted as either Adobe PDF, WordPerfect, MSWord, or text (.TXT) files. Supporting documentation submitted as spreadsheets are acceptable as Quattro Pro or Excel. For any document containing business confidential information submitted electronically, the file name of the business confidential version should begin with the characters ''BC–'', and the file name of the public version should begin with the characters ''P–''. The ''P–'' or ''BC–''should be followed by the name of the submitter. Persons who make submissions by e-mail should not provide separate cover letters; information that might appear in a cover letter should be included in the submission itself. Similarly, to the extent possible, any attachments to the submission should be included in the same file as the submission itself, and not as separate files.

Written comments, notices of testimony, and testimony will be placed in a file open to public inspection pursuant to 15 CFR 2003.5, except confidential business information exempt from public inspection in accordance with 15 CFR 2003.6. Confidential business information submitted in accordance with 15 CFR 2003.6 must be clearly marked ''BUSINESS CONFIDENTIAL'' at the top of each page, including any cover letter or cover page, and must be accompanied by a nonconfidential summary of the confidential information. All public documents and nonconfidential summaries shall be available for public inspection in the USTR Reading Room. The USTR Reading Room is open to the public, by appointment only, from 10 a.m. to 12 noon and 1 p.m. to 4 p.m., Monday through Friday. An appointment to review the file may be made by calling (202) 395–6186. Appointments must be scheduled at least 48 hours in advance.

General information concerning USTR may be obtained by accessing its Internet Web site (*www.ustr.gov*).

Carmen Suro-Bredie,

Chairman, Trade Policy Staff Committee.

[FR Doc. 04–17327 Filed 7–28–04; 8:45 am]

BILLING CODE 3190–W4–P

DEPARTMENT OF TRANSPORTATION

[Docket No.: MARAD 2004–17166]

Availability of a Final Environmental Assessment and Finding of No Significant Impact

AGENCY: Maritime Administration, Department of Transportation.

ACTION: Notice of availability of Final Environmental Assessment and Finding of No Significant Impact.

SUMMARY: Notice is hereby given that the Maritime Administration (MARAD), of the U.S. Department of Transportation (US DOT) has made available for review to interested parties the Final Environmental Assessment (FEA) for the transfer and disposal of approximately nine obsolete vessels from the James River Reserve Fleet (JRRF) to the Able UK facility located in Teeside, United Kingdom. The FEA studied potential environmental effects associated with the transfer of the obsolete vessels for disposal. The FEA considered potential effects to the natural and manmade environments including: Air quality; water quality; geology and soils; coastal resources; terrestrial resources; aquatic resources; navigation; hazardous materials; cultural and historic resources; and visual and aesthetic resources, among other topics associated with the proposed action.

Conclusion: The Maritime Administration assessed the potential environmental consequences of the proposed action and the no action alternative, and found no significant impacts to the human and natural environments from implementation of the proposed alternative.

FOR FURTHER INFORMATION CONTACT: Debra Aheron, U.S. DOT, Maritime Administration, 400 7th Street, SW., Washington, DC 20590, tel: (202) 366–8887/fax: (202) 366–6988, e-mail: *Deborah.Aheron@marad.dot.gov*.

SUPPLEMENTARY INFORMATION: Copies of the Final EA are available on the MARAD Web site (*http://www.marad.dot.gov*) and on the Department of Transportation Docket Management System (*http://dms.dot.gov*).

(Authority: 49 CFR 1.66.)

By Order of the Maritime Administrator.

Dated: July 26, 2004.

Joel C. Richard,

Secretary, Maritime Administration.

[FR Doc. 04–17288 Filed 7–28–04; 8:45 am]

BILLING CODE 4910–81–P

DEPARTMENT OF TRANSPORTATION

National Highway Traffic Safety Administration

[U.S. DOT Docket Number NHTSA–04–18654]

Reports, Forms, and Recordkeeping Requirements

AGENCY: National Highway Traffic Safety Administration (NHTSA), Department of Transportation.

ACTION: Request for extension of a currently approved collection of information.

SUMMARY: Before a Federal agency can collect certain information from the public, it must receive approval from the Office of Management and Budget (OMB). Under procedures established

by the Paperwork Reduction Act of 1995, before seeking OMB approval, Federal agencies must solicit public comment on proposed collections of information, including extensions and reinstatement of previously approved collections.

This document describes one collection of information for which NHTSA intends to seek OMB approval.

DATES: Comments must be received on or before September 27, 2004.

ADDRESSES: Comments must refer to the docket notice numbers cited at the beginning of this notice and be submitted to Docket Management, Room PL–401, 400 Seventh Street, SW., Washington, DC 20590 by any of the following methods.

- Federal eRulemaking Portal: *http://www.regulations.gov.* Follow the instructions for submitting comments.
- Agency Web Site: *http://dms.dot.gov.* Follow the instructions for submitting comments on the Docket Management System.
- Fax: (202) 493–2251.
- Mail: Dockets, 400 7th Street, SW., Washington, DC 20590.
- Hand Delivery/Courier: Plaza Level Room 401 (PL #401), of Nassif Building, 400 7th Street, SW., Washington, DC 20590. Telephone: 1–800–647–5527.

Please identify the proposed collection of information for which a comment is provided, by referencing its OMB clearance number. It is requested, but not required, that 2 copies of the comment be provided. The Docket Section is open on weekdays from 10 a.m. to 5 p.m.

FOR FURTHER INFORMATION CONTACT: Complete copies of each request for collection of information may be obtained at no charge from P.L. Moore, NHTSA, 400 Seventh Street, SW., Room # 5320, NVS 131,Washington, DC 20590. Mr. Moore's telephone number is (202) 366–5222. Please identify the relevant collection of information by referring to its OMB Control Number.

SUPPLEMENTARY INFORMATION: Under the Paperwork Reduction Act of 1995, before an agency submits a proposed collection of information to OMB for approval, it must first publish a document in the **Federal Register** providing a 60-day comment period and otherwise consult with members of the public and affected agencies concerning each proposed collection of information. The OMB has promulgated regulations describing what must be included in such a document. Under OMB's regulation (at 5 CFR 1320.8(d), an agency must ask for public comment on the following:

(i) Whether the proposed collection of information is necessary for the proper performance of the functions of the agency, including whether the information will have practical utility;

(ii) The accuracy of the agency's estimate of the burden of the proposed collection of information, including the validity of the methodology and assumptions used;

(iii) How to enhance the quality, utility, and clarity of the information to be collected;

(iv) How to minimize the burden of the collection of information on those who are to respond, including the use of appropriate automated, electronic, mechanical, or other technological collection techniques or other forms of information technology, *e.g.* permitting electronic submission of responses.

In compliance with these requirements, NHTSA asks for public comments on the following proposed collections of information:

Title: 49 CFR part 575, 104; Uniform Tire Quality Grading Standard.

OMB Control Number: 2127–0519.

Affected Public: All passenger car tire manufacturers and brand name owners offering passenger car tires for sale in the United States.

Form Number: The collection of this information uses no standard form.

Abstract: Part 575 requires tire manufacturers and tire brand owners to submit reports to NHTSA regarding the UTQGS grades of all passenger car tire lines they offer for sale in the United States. This information is used by consumers of passenger car tires to compare tire quality in making their purchase decisions. The information is provided in several different ways to insure that the consumer can readily see and understand the tire grade: (1) The grades are molded into the sidewall of the tire so that they can be reviewed on both the new tire and the old tire that is being replaced; (2) a paper label is affixed to the tread face of the new tire that provides the grade of that particular tireline along with an explanation of the grading system; (3) tire manufacturers provide dealers with brochures for public distribution listing the grades of all of the tirelines they offer for sale; and (4) NHTSA compiles the grading information of all manufacturers' tirelines into a booklet that is available to the public both in printed form and on the Web site.

Estimated Annual Burden: NHTSA estimates that a total of 72,500 man-hours are required to write the brochures, engrave the new passenger car tire molds, and affix the paper labels to the tires. Based on an average hourly rate of $18.00 per hour for rubber workers in the United States, the cost to the manufacturers is $1,305,000.00 to perform those items listed above. The largest portion of the cost burden imposed by the UTQGS program arises from the testing necessary to determine the grades that should be assigned to the tires. An average of 125 convoys, driven 7,200 miles each, consisting of four vehicles and four drivers, are run each year for treadwear testing. NHTSA estimates it cost $0.46 per vehicle mile including salaries, overhead and reports. This brings the annual treadwear testing cost to $1,656,000.00. For the traction testing, it is estimated that 1,500 tires are tested annually with an estimated cost of $33,000 for use of the government test facility. Using a factor of 3.5 times to cover salary and overhead of test contractors, the estimated cost of traction testing is $115,500. The temperature grade test for tires is an extension of the high speed performance test of 49 CFR Part 571.109 that is required for safety certification. The additional cost for UTQGS temperature testing is minimal. Thus the total estimated cost for UTQGS testing is $1,771,500. The cost of printing the tread labels and brochures is estimated at $900,000. This yields a total annual financial burden of approximately $4 million on the tire manufacturers.

Estimated Annual Burden to the Government: The annual estimated cost of reviewing, storing and displaying the information is 250 man-hours at $10.00 per hour, for a cost of $2,500 per year. Printing and distributing the Consumer Guide to Uniform Tire Quality Grading cost about $5,000 per year. The total cost to the Government runs about $7,500 per year.

Number of Respondents: There are approximately 130 individual tire brands sold in the United States. The actual number of respondents is much less than 130 due to company acquisitions, mergers, and in most cases, the manufacturer will report for the various individual brand names that they produce tires for. The actual number of respondents is about 80 individual responses.

Comments are invited on: Whether the proposed collection of information is necessary for the proper performance of the functions of the Department, including whether the information will have practical utility; the accuracy of the Department's estimate of the burden of the proposed information collection; ways to enhance the quality, utility and clarity of the information to be collected; and ways to minimize the burden of the collection of information on respondents, including the use of

automated collection techniques or other forms of information technology.

Issued on: July 26, 2004.

Stephen R. Kratzke,

Associate Administrator for Rulemaking.

[FR Doc. 04–17270 Filed 7–28–04; 8:45 am]

BILLING CODE 4910–59–P

DEPARTMENT OF TRANSPORTATION

National Highway Traffic Safety Administration

[Docket No. NHTSA–2004–18653; Notice 1]

Baby Trend, Inc., Receipt of Petition for Decision of Inconsequential Noncompliance

Baby Trend, Inc. (Baby Trend) has determined that certain child restraint seats that it produced and sold between approximately June 2002 and June 2003 do not comply with S5.2.3.2(a) of 49 CFR 571.213, Federal Motor Vehicle Safety Standard (FMVSS) No. 213, ''Child restraint systems.'' Baby Trend has filed an appropriate report pursuant to 49 CFR part 573, ''Defect and Noncompliance Reports.''

Pursuant to 49 U.S.C. 30118(d) and 30120(h), Baby Trend has petitioned for an exemption from the notification and remedy requirements of 49 U.S.C. chapter 301 on the basis that this noncompliance is inconsequential to motor vehicle safety.

This notice of receipt of Baby Trend's petition is published under 49 U.S.C. 30118 and 30120 and does not represent any agency decision or other exercise of judgment concerning the merits of the petition.

A total of approximately 150,730 Latch-Loc infant car seats, Model #6078 (65,798 seats), Model #6076 (44,649 seats), Model #6020 (25,506 seats) and Model #6188 (14,777 seats) are affected. S5.2.3.2 of FMVSS No. 213 requires that:

> Each system surface * * * which is contactable by the dummy head when the system is tested in accordance with S6.1 shall be covered with slow recovery, energy absorbing material with the following characteristics: (a) A 25 percent compression-deflection resistance of not less than 0.5 and not more than 10 pounds per square inch when tested in accordance with S6.3.

The foam covering as molded onto the seat back of these seats has a compression-deflection resistance of 0.3 pounds per square inch, and therefore does not meet the compression-deflection resistance required by S5.2.3.2(a).

Baby Trend believes that the noncompliance is inconsequential to motor vehicle safety and that no corrective action is warranted. Baby Trend states:

> Technical issues were * * * noted involving variability in application of testing methodologies between Certified Analytical Laboratory Services, Inc. (formerly CALSPAN) and NHTSA staff. Certified Analytical Laboratory Services applied the Section 6.3.4.2 [sic—should say 6.3.1] compression-deflection resistance methodology on square sheet stock white foam in the appropriate ambient laboratory conditions and did not note any lack of conformance for white foam material with no back, green foam material with no back, white shaped foam material with no back, green shaped foam material with polybead backing and white foam shaped material with polybead backing. This information was supplied by the Company to NHTSA staff. Questions arose between the laboratory technicians about variability in testing methodologies to ensure absolute real world integrity of the product as it related to performance of the energy absorbing foam material in actual use as molded on seat shells. The Company also performed a Regulation No. 44, Annex 17 Test of the Energy Absorbing Material on the seats with calibrated dummies (* * * which in turn noted satisfactory real-world energy absorption performance of the molded foam covered seat shells). * * * [T]he Company does not believe that the product presents any real world safety hazard as verified by highly sensitive testing with calibrated dummies on actual production product.

Baby Trend further states:

> [T]he Company has undertaken additional testing of the subject products in accordance with [revised FMVSS No. 213 (68 CFR 37620)]. * * * Despite the fact that testing to the revised Standard is not yet required, the Company has undertaken such testing to ensure that the technical non-compliance alleged with the component of the subject products is inconsequential as it relates to child restraint system safety. Testing was performed at Advanced Information Engineering Services Transportation Sciences Center during June 2004, utilizing the Center's tandem configuration HYGE Sled with reinforced seat covers on both benches. Three sled tests were performed utilizing six (6) subject seats in the rearward facing reclined configuration with either a 9-month-old size dummy or a 12-month-old size crabi dummy employing either the integral rigid latch system or the ''soft latch'' restraint system. Results of the tests indicated that the products were in compliance to the requirements of the revised FMVSS No. 213.

Interested persons are invited to submit written data, views, and arguments on the petition described above. Comments must refer to the docket and notice number cited at the beginning of this notice and be submitted by any of the following methods. Mail: Docket Management Facility, U.S. Department of Transportation, Nassif Building, Room PL–401, 400 Seventh Street, SW., Washington, DC 20590–0001. Hand Delivery: Room PL–401 on the plaza level of the Nassif Building, 400 Seventh Street, SW., Washington, DC. It is requested, but not required, that two copies of the comments be provided. The Docket Section is open on weekdays from 10 a.m. to 5 p.m. except Federal holidays. Comments may be submitted electronically by logging onto the Docket Management System Web site at *http://dms.dot.gov.* Click on ''Help'' to obtain instructions for filing the document electronically. Comments may be faxed to 1–202–493–2251, or may be submitted to the Federal eRulemaking Portal: go to *http://www.regulations.gov*. Follow the online instructions for submitting comments.

The petition, supporting materials, and all comments received before the close of business on the closing date indicated below will be filed and will be considered. All comments and supporting materials received after the closing date will also be filed and will be considered to the extent possible. When the petition is granted or denied, notice of the decision will be published in the **Federal Register** pursuant to the authority indicated below.

Comment closing date: August 30, 2004.

Authority: 49 U.S.C. 30118, 30120: delegations of authority at CFR 1.50 and 501.8.

Issued on: July 23, 2004.

Kenneth N. Weinstein,

Associate Administrator for Enforcement.

[FR Doc. 04–17269 Filed 7–28–04; 8:45 am]

BILLING CODE 4910–59–P

DEPARTMENT OF THE TREASURY

Alcohol and Tobacco Tax and Trade Bureau

Proposed Information Collection; Comment Request

AGENCY: Alcohol and Tobacco Tax and Trade Bureau (TTB), Treasury.

ACTION: Notice and request for comments.

SUMMARY: The Department of the Treasury and its Alcohol and Tobacco Tax and Trade Bureau, as part of their continuing effort to reduce paperwork and respondent burden, invite the public and other Federal agencies to comment on proposed and continuing information collections, as required by the Paperwork Reduction Act of 1995 (44 U.S.C. 3501 *et seq.*). Currently, we are seeking comments on TTB Form

5013.1 titled ''Electronic Filing User Access Enrollment Form.''

DATES: We must receive your written comments on or before September 27, 2004.

ADDRESSES: You may send comments to Sandra Turner, Alcohol and Tobacco Tax and Trade Bureau, at any of these addresses:

- P.O. Box 14412, Washington, DC 20044–4412;
- (202) 927–8525 (facsimile); or
- *formcomments@ttb.gov* (e-mail).

Please reference the information collection's title, form or recordkeeping requirement number, and OMB number (if any) in your comment. If you submit your comment via facsimile, send no more than five 8.5 x 11 inch pages in order to ensure electronic access to our equipment.

FOR FURTHER INFORMATION CONTACT: To obtain additional information, copies of the information collection and its instructions, or copies of any comments received, contact Sandra Turner, Alcohol and Tobacco Tax and Trade Bureau, P.O. Box 14412, Washington, DC 20044–4412; or telephone (202) 927–8210.

SUPPLEMENTARY INFORMATION:

Title: Electronic Filing User Access Enrollment Form.

OMB Number: 1513–0109.

TTB Form Number: 5013.1.

Abstract: The purpose of TTB F 5013.1 is to authenticate end users in a pilot program to electronically file excise taxes. The information is used by the Government to verify the identity of the end users prior to issuing them passwords.

Current Actions: There are no changes to this information collection and it is being submitted for extension purposes only.

Type of Review: Extension.

Affected Public: Business or other for-profit.

Estimated Number of Respondents: 25.

Estimated Total Annual Burden Hours: 7.

Request for Comments

Comments submitted in response to this notice will be included or summarized in our request for Office of Management and Budget (OMB) approval of this information collection. All comments are part of the public record and subject to disclosure. Please not do include any confidential or inappropriate material in your comments.

We invite comments on: (a) Whether this information collection is necessary for the proper performance of the agency's functions, including whether the information has practical utility; (b) the accuracy of the agency's estimate of the information collection's burden; (c) ways to enhance the quality, utility, and clarity of the information collected; (d) ways to minimize the information collection's burden on respondents, including through the use of automated collection techniques or other forms of information technology; and (e) estimates of capital or start-up costs and costs of operation, maintenance, and purchase of services to provide the requested information.

Dated: July 21, 2004.

William H. Foster,

Chief, Regulations and Procedures Division.

[FR Doc. 04–17302 Filed 7–28–04; 8:45 am]

BILLING CODE 4810–31–P

DEPARTMENT OF THE TREASURY

Fiscal Service

Financial Management Service: Proposed Collection of Information: Depositor's Application for Payment of Postal Savings Certificate (TFS 5118)

AGENCY: Financial Management Service, Fiscal Service, Treasury.

ACTION: Notice and request for comments.

SUMMARY: The Financial Management Service, as part of its continuing effort to reduce paperwork and respondent burden, invites the general public and other Federal agencies to take this opportunity to comment on a continuing information collection. By this notice, the Financial Management Service solicits comments concerning the ''Depositor's Application for Payment of Postal Savings Certificate (TFS 1158)''.

DATES: Written comments should be received on or before September 27, 2004.

ADDRESSES: Direct all written comments to Financial Management Service, 3700 East West Highway, Records and Information Management Program Staff, Room 135, Hyattsville, Maryland 20782.

FOR FURTHER INFORMATION CONTACT: Requests for additional information should be directed to Rose Brewer, Judgment Fund Branch, 3700 East West Highway, Room 630F, Hyattsville, Maryland 20782, (202) 874–6664.

SUPPLEMENTARY INFORMATION: Pursuant to the Paperwork Reduction Act of 1995, (44 U.S.C. 3506(c)(2)(A)), the Financial Management Service solicits comments on the collection of information described below:

Title: Depositor's Application for Payment of Postal Savings Certificate.

OMB Number: 1510–0029.

Form Number: TFS 5118.

Abstract: This form is used when depositors have lost, destroyed or misplaced their Postal Savings Certificates. This form replaces the certificates to support the application for payment.

Current Actions: Extension of currently approved collection.

Type of Review: Regular.

Affected Public: Individuals or households.

Estimated Number of Respondents: 200.

Estimated Time Per Respondent: 15 minutes.

Estimated Total Annual Burden Hours: 50.

Comments: Comments submitted in response to this notice will be summarized and/or included in the request for Office of Management and Budget approval. All comments will become a matter of public record. Comments are invited on: (a) Whether the collection of information is necessary for the proper performance of the functions of the agency, including whether the information shall have practical utility; (b) the accuracy of the agency's estimate of the burden of the collection of information; (c) ways to enhance the quality, utility, and clarity of the information to be collected; (d) ways to minimize the burden of the collection of information on respondents, including through the use of automated collection techniques or other forms of information technology; and (e) estimates of capital or start-up costs and costs of operation, maintenance and purchase of services to provide information.

Dated: July 14, 2004.

Wanda Rogers,

Assistant Commissioner, Financial Operations.

[FR Doc. 04–16773 Filed 7–28–04; 8:45 am]

BILLING CODE 4810–35–M

DEPARTMENT OF VETERANS AFFAIRS

Office of Research and Development; Government Owned Invention Available for Licensing

AGENCY: Office of Research and Development, Veterans Affairs.

ACTION: Notice of Government Owned Invention Available for Licensing.

SUMMARY: The invention listed below is owned by the U.S. Government as represented by the Department of

Veterans Affairs, and is available for licensing in accordance with 35 U.S.C. 207 and 37 CFR part 404 and/or CRADA Collaboration under 15 U.S.C. 3710a to achieve expeditious commercialization of results of federally funded research and development. Foreign patents are filed on selected inventions to extend market coverage for U.S. companies and may also be available for licensing.

FOR FURTHER INFORMATION CONTACT: Technical and licensing information on the invention may be obtained by writing to: Robert W. Potts, Department of Veterans Affairs, Director Technology Transfer Program, Office of Research and Development, 810 Vermont Avenue NW., Washington, DC 20420; fax: 202–254–0473; e-mail at *bob.potts@hq.med.va.gov.* Any request for information should include the Number and Title for the relevant invention as indicated below. Issued patents may be obtained from the Commissioner of Patents, U.S. Patent and Trademark Office, Washington, DC 20231.

SUPPLEMENTARY INFORMATION: The invention available for licensing is: U.S. Provisional Patent Application No. 60/443,572 ''Isolation and Characterization of Human Marrow-Isolated Adult Multipotent Inducible (MIAMI) Cells, a Population of Postnatal Stem Cells with Extensive Differentiation Potential Leading to Phenotypically Mature Cells Found Among Mesodermal-, Endodermal-, and Ectodermal-Derived Lineages.''

Dated: July 21, 2004.

Anthony J. Principi,

Secretary, Department of Veterans Affairs.

[FR Doc. 04–17210 Filed 7–28–04; 8:45 am]

BILLING CODE 8320–01–P

Federal Register

Thursday,
July 29, 2004

Part II

Department of Energy

Office of Energy Efficiency and Renewable Energy

10 CFR Part 430

Energy Conservation Program for Commercial and Industrial Equipment: Energy Conservation Standards for Distribution Transformers; Proposed Rule

DEPARTMENT OF ENERGY

Office of Energy Efficiency and Renewable Energy

10 CFR Part 430

[Docket No. EE–RM/STD–00–550]

RIN 1904–AB08

Energy Conservation Program for Commercial and Industrial Equipment: Energy Conservation Standards for Distribution Transformers

AGENCY: Office of Energy Efficiency and Renewable Energy, Department of Energy.

ACTION: Advance notice of proposed rulemaking, public meeting and webcast.

SUMMARY: The Energy Policy and Conservation Act (EPCA or the Act) authorizes the Department of Energy (DOE or the Department) to establish energy conservation standards for various consumer products and commercial and industrial equipment, including distribution transformers, if DOE determines that energy conservation standards would be technologically feasible and economically justified, and would result in significant energy savings. The Department publishes this Advance Notice of Proposed Rulemaking (ANOPR) to consider establishing energy conservation standards for distribution transformers and to announce a public meeting to receive comments on a variety of issues.

DATE: The Department will hold a webcast on August 10, 2004 from 1 p.m. to 4 p.m. If you are interested in participating in this event, please inform Sandy Beall at (202) 586–7574.

The Department will hold a public meeting on September 28, 2004, starting at 9 a.m., in Washington, DC. The Department must receive requests to speak at the public meeting no later than 4 p.m., September 14, 2004. The Department must receive a signed original and an electronic copy of statements to be given at the public meeting no later than 4 p.m., September 21, 2004.

The Department will accept comments, data, and information regarding the ANOPR before or after the public meeting, but no later than November 9, 2004. *See* section IV, ''Public Participation,'' of this ANOPR for details.

ADDRESSES: The public meeting will be held at the U.S. Department of Energy, Forrestal Building, Room 1E–245, 1000 Independence Avenue, SW., Washington, DC. (Please note that foreign nationals visiting DOE Headquarters are subject to advance security screening procedures, requiring a 30-day advance notice. If you are a foreign national and wish to participate in the workshop, please inform DOE of this fact as soon as possible by contacting Ms. Brenda Edwards-Jones at (202) 586–2945 so that the necessary procedures can be completed.)

You may submit comments, identified by docket number EE–RM/STD–00–550 and/or RIN number 1904–AB08, by any of the following methods:

- *Federal eRulemaking Portal: http://www.regulations.gov*. Follow the instructions for submitting comments.
- *E-mail: TransformerANOPRComment@ee.doe.gov*. Include EE–RM/STD–00–550 and/or RIN 1904–AB08 in the subject line of the message.
- *Mail:* Ms. Brenda Edwards-Jones, U.S. Department of Energy, Building Technologies Program, Mailstop EE–2J, ANOPR for Distribution Transformers, EE–RM/STD–00–550 and/or RIN 1904–AB08, 1000 Independence Avenue, SW., Washington, DC, 20585–0121. Telephone: (202) 586–2945. Please submit one signed paper original.
- *Hand Delivery/Courier:* Ms. Brenda Edwards-Jones, U.S. Department of Energy, Building Technologies Program, Room 1J–018, 1000 Independence Avenue, SW., Washington, DC, 20585.

Instructions: All submissions received must include the agency name and docket number or Regulatory Information Number (RIN) for this rulemaking. For detailed instructions on submitting comments and additional information on the rulemaking process, see section IV of this document (Public Participation).

Docket: For access to the docket to read background documents or comments received, go to the U.S. Department of Energy, Forrestal Building, Room 1J–018 (Resource Room of the Building Technologies Program), 1000 Independence Avenue, SW., Washington, DC, (202) 586–9127, between 9 a.m. and 4 p.m., Monday through Friday, except Federal holidays. Please call Ms. Brenda Edwards-Jones at the above telephone number for additional information regarding visiting the Resource Room. Please note: The Department's Freedom of Information Reading Room (Room 1E–190 at the Forrestal Building) is no longer housing rulemaking materials.

FOR FURTHER INFORMATION CONTACT: Ron Lewis, Project Manager, Energy Conservation Standards for Distribution Transformers, Docket No. EE–RM/STD–00–550, EE–2J / Forrestal Building, U.S. Department of Energy, Office of Building Technologies, EE–2J, 1000 Independence Avenue SW., Washington, DC, 20585–0121, (202) 586–8423. E-mail: *Ronald.Lewis@ee.doe.gov*.

Thomas B. DePriest, Esq., U.S. Department of Energy, Office of General Counsel, Forrestal Building, Mail Station GC–72, 1000 Independence Avenue, SW., Washington, DC, 20585, (202) 586–9507. E-mail: *Thomas.DePriest@hq.doe.gov*.

SUPPLEMENTARY INFORMATION:

I. Introduction
A. Purpose of the ANOPR
B. Summary of the Analysis
1. Engineering Analysis
2. Life-Cycle Cost and Payback Period Analyses
3. National Impact Analysis
C. Authority
D. Background
1. History of Standards Rulemaking for Distribution Transformers
2. Process Improvement
3. Test Procedure
II. Distribution Transformer Analyses
A. Market and Technology Assessment
1. Definition of a Distribution Transformer
a. Changes to, and Retention of, Provisions in the Framework Document Definition
b. Exclusions Discussed in the Test Procedure Reopening Notice
c. Additional Exclusions Drawn from NEMA TP 1
d. Distribution Transformer Definition
e. Exclusions Not Incorporated
2. Product Classes
3. Market Assessment
4. Technology Assessment
B. Screening Analysis
C. Engineering Analysis
1. Approach Taken in the Engineering Analysis
2. Simplifying the Analysis
3. Developing the Engineering Analysis Inputs
4. Energy Efficient Design Issues
5. Engineering Analysis Results
D. Energy Use and End-Use Load Characterization
E. Markups for Equipment Price Determination
F. Life-Cycle Cost and Payback Period Analyses
1. Approach Taken in the Life-Cycle Cost Analysis
2. Life-Cycle Cost Inputs
a. Effective Date of Standard
b. Candidate Standard Levels
c. Baseline and Standard Design Selection
d. Power Factor
e. Load Growth
f. Electricity Costs
g. Electricity Price Trends
h. Equipment Lifetime
i. Maintenance Costs
j. Discount Rates
3. Payback Period
4. Life-Cycle Cost and Payback Period Results
G. Shipments Analysis
1. Shipments Model

2. Shipments Model Inputs
3. Shipments Model Results
H. National Impact Analysis
1. Method
2. National Energy Savings
a. National Energy Savings Overview
b. National Energy Savings Inputs
3. Net Present Value Calculation
a. Net Present Value Overview
b. Net Present Value Inputs
4. National Energy Savings and Net Present Value Results
a. National Energy Savings and Net Present Value from Candidate Standard Levels
I. Life-Cycle Cost Sub-Group Analysis
J. Manufacturer Impact Analysis
1. Sources of Information for the Manufacturer Impact Analysis
2. Industry Cash Flow Analysis
3. Manufacturer Sub-Group Analysis
4. Competitive Impacts Assessment
5. Cumulative Regulatory Burden
K. Utility Impact Analysis
L. Employment Impact Analysis
M. Environmental Assessment
N. Regulatory Impact Analysis
III. Proposed Standards Scenarios
IV. Public Participation
A. Attendance at Public Meeting
B. Procedure for Submitting Requests to Speak
C. Conduct of Public Meeting
D. Submission of Comments
E. Issues on Which DOE Seeks Comment
1. Definition and Coverage
2. Product Classes
3. Engineering Analysis Inputs
4. Design Option Combinations
5. The 0.75 Scaling Rule
6. Modeling of Transformer Load Profiles
7. Distribution Chain Markups
8. Discount Rate Selection and Use
9. Baseline Determination Through Purchase Evaluation Formulae
10. Electricity Prices
11. Load Growth Over Time
12. Life-Cycle Cost Sub-Groups
13. Utility Deregulation Impacts
V. Regulatory Review and Procedural Requirements
VI. Approval of the Office of the Secretary

I. Introduction

A. Purpose of the ANOPR

The purpose of this ANOPR is to provide interested persons with an opportunity to comment on:

(i) The product classes that the Department is planning to analyze;

(ii) The analytical framework, models, and tools (*e.g.* life-cycle cost (LCC) and national energy savings (NES) spreadsheets) used by the Department in performing analyses of the impacts of energy conservation standards;

(iii) The results of the engineering analysis, the LCC and payback period (PBP) analyses, and the national impact analysis presented in the ANOPR Technical Support Document (TSD): Energy Efficiency Standards for Commercial and Industrial Equipment: Electric Distribution Transformers; and

(iv) The candidate energy conservation standard levels that the Department has developed from these analyses.

B. Summary of the Analysis

The Energy Policy and Conservation Act (42 U.S.C. 6317) authorizes DOE to consider establishing energy conservation standards for various consumer products and commercial and industrial equipment, including distribution transformers, which are the subject of this ANOPR.

The Department conducted eight analyses for this ANOPR: Market and technology assessment, screening analysis, engineering analysis, energy use and end-use load characterization, markups for equipment price determination, LCC and PBP analyses, shipments analysis, and national impact analysis. Three of the above analyses produce key results while the other five produce intermediate inputs. The three key analyses conducted are summarized briefly below: (1) Engineering; (2) life-cycle cost and payback periods; and (3) national impacts.

1. Engineering Analysis

The engineering analysis estimates the relationship between cost and efficiency for selected distribution transformers. The Department structured the engineering analysis around 13 groupings (termed ''engineering design lines') of similarly built distribution transformers. The Department then identified one representative unit from each grouping, conducted software design runs on those units, estimated the material and labor costs, and calculated the performance of each design. Markups were applied to the manufacturer costs to arrive at the manufacturer's selling price. In this way, the Department constructed manufacturer-selling-price versus efficiency curves for the representative units from each of the 13 engineering design lines. These relationship curves are a critical input to the LCC analysis.

2. Life-Cycle Cost and Payback Period Analyses

The life-cycle costs (LCC) and payback period (PBP) analyses determine the economic impact of potential standards on individual consumers. LCC and PBP calculations are conducted on each of the representative units from the 13 engineering design lines. The LCC calculation considers the total installed cost of equipment manufactured to comply with potential energy efficiency standards (equipment purchase price plus installation cost), the operating expenses of such equipment (energy and maintenance costs), the lifetime of the equipment, and uses the discount rate that reflects the consumer cost of capital to put the LCC in current year dollars. The PBP is a calculation to determine the period of time necessary to recover the higher purchase price of more efficient transformers through the operating cost savings. The PBP analysis provides a simplified estimate of the PBP as the incremental cost of a more efficient transformer divided by the first year operating savings. Both the LCC and PBP analyses consider that the consumer is an electric utility or commercial/industrial entity, responsible for both the purchase price and operating costs of the distribution transformer.

The foundation of the LCC and PBP analyses is the transformer design and cost information from the engineering analysis. Most other inputs to the LCC and PBP analyses are characterized by probability distributions. These input probability distributions, combined with a baseline scenario of current market conditions, generate probability distributions of LCC and PBP results using Monte Carlo statistical analysis methods.

One of the most critical inputs to the LCC and PBP analyses is the price of electricity. The Department derived two sets of electricity prices to estimate annual energy expenses: A tariff-based estimate to characterize the prices to the commercial and industrial owners of dry-type transformers and a utility-market-based estimate to characterize the electricity costs to owners, which are typically utilities, of liquid-immersed transformers.

3. National Impact Analysis

The national impact analysis assesses the net present value (NPV) of national economic impacts as well as the NES. The Department calculated both the NES and NPV for a given standard level as the difference between a base case (without new standards) and a standards case (with standards). National annual energy consumption by distribution transformers considered by the Department is determined by multiplying the number of distribution transformers in use by the average unit energy consumption. Cumulative energy savings are the sum of the annual NES results calculated over specified time periods. The national NPV is the sum over time of the discounted net cost savings due to energy savings associated with a proposed standard. The Department calculated net savings each year as the difference between total

operating cost savings and increases in total installed costs for each candidate standard level. Cumulative NPV savings are the sum of the annual NPV calculated over specified time periods.

One of the most critical inputs to the NES and NPV calculation is the shipments forecast. The Department developed shipment projections for the base case and the candidate standard levels. The default scenario for both calculations differs between liquid-immersed and dry-type transformers. For liquid-immersed transformers, the Department determined that shipment projections in the standards cases would be slightly lower than those for the base case due to the higher installed cost of the more energy efficient distribution transformers in the standards case. For dry-type transformers, the Department determined that there would be no difference in shipment projections between the base case and standards cases.

Table I.1 summarizes the methodologies, key inputs and assumptions for each ANOPR analysis area. The table also presents the sections in this document that contain the analysis results.

TABLE I.1.—IN-DEPTH TECHNICAL ANALYSES CONDUCTED FOR THE ANOPR

Analysis area	Methodology	Key inputs	Key assumptions	ANOPR section for results
Engineering	Simplify population for analysis; create design option combinations; use design software to prepare a range of efficiency designs.	(1) Material costs for construction; (2) Design tolerances.	Maximum technologically feasible design for liquid-immersed is amorphous core, for a dry-type is laser-scribed.	Section II.C.5; presented in the TSD, Chapter 5.
LCC and PBP	Transformer-by-transformer analysis using representative models from simplified design lines.	(1) Cost /efficiency relationship from engineering analysis; (2) Baseline determination from purchase decision model; (3) Electricity prices and tariffs.	(1) Liquid-immersed subject to utility industry economics; (2) Dry-type subject to commercial/industrial economics.	Section II.F.4; results also presented in the TSD, Chapter 8.
National impact analysis.	Distribution transformer costs and energy consumption forecasted to 2035; combined with LCC results and mapped to product classes (1) Average values from the LCC analysis; (2) Historical shipment shipments estimate.	(1) Design line-to-product class mapping; (2) 0.75 power scaling rule.	Section II.H.4; results also presented in the TSD, Chapter 10.	

The Department consulted with stakeholders and published preliminary findings during the development and execution of the analyses shown in Table I.1. The Department invites further input from stakeholders on the methodologies, inputs, and assumptions presented in this document.

C. Authority

Title III of EPCA established an energy conservation program for consumer products other than automobiles. Amendments expanded Title III of EPCA to include certain commercial and industrial equipment, including distribution transformers. (42 U.S.C. 6311 *et seq.*) Specifically the Department's authority for this ANOPR is in 42 U.S.C. 6317.

Before the Department determines whether to adopt a proposed energy conservation standard, it will first solicit comments on the proposed standard. The Department will consider designing any new or amended standard to achieve the maximum improvement in energy efficiency that is technologically feasible and economically justified. (42 U.S.C. 6295 (o)(2)(A) and 42 U.S.C. 6317(c)) If a proposed standard is not designed to achieve the maximum improvement in energy efficiency or the maximum reduction in energy use that is technologically feasible, DOE will state the reasons for this in the proposed rule. To determine whether economic justification exists, the Department will review comments on the proposal and determine whether the benefits of the proposed standard exceed its burdens to the greatest extent practicable, while considering the following seven factors (*see* 42 U.S.C. 6295 (o)(2)(B)):

(1) The economic impact of the standard on manufacturers and consumers of products subject to the standard;

(2) The savings in operating costs throughout the estimated average life of the covered products in the type (or class) compared to any increase in the price, initial charges, or maintenance expenses for the covered products which are likely to result from the imposition of the standard;

(3) The total projected amount of energy * * * savings likely to result directly from the imposition of the standard;

(4) Any lessening of the utility or the performance of the covered products likely to result from the imposition of the standard;

(5) The impact of any lessening of competition, as determined in writing by the Attorney General, that is likely to result from the imposition of the standard;

(6) The need for national energy conservation; and

(7) Other factors the Secretary considers relevant.

D. Background

1. History of Standards Rulemaking for Distribution Transformers

On October 22, 1997, the Secretary of Energy issued a determination that ''based on its analysis of the information now available, the Department has determined that energy conservation standards for transformers appear to be technologically feasible and economically justified, and are likely to result in significant savings.'' 62 FR 54809.

The Secretary's determination was based, in part, on analyses conducted by the Department of Energy's Oak Ridge National Laboratory (ORNL). In July 1996, ORNL published a report entitled Determination Analysis of Energy Conservation Standards for Distribution Transformers, ORNL–6847, which assessed options for setting energy

conservation standards. That report was based on information from annual sales data, average load data, and surveys of existing and potential transformer efficiencies obtained from several organizations.

In September 1997, ORNL published a second report entitled Supplement to the ''Determination Analysis'' (ORNL–6847) and Analysis of the NEMA Efficiency Standard for Distribution Transformers, ORNL–6925. This report assessed the suggested efficiency levels contained in the then-newly published National Electrical Manufacturers Association (NEMA) Standards Publication No. TP 1–1996, Guide for Determining Energy Efficiency for Distribution Transformers, along with the efficiency levels previously considered by the Department in the determination study. The latest downloadable version of TP 1 is available at the NEMA Web site: *http://www.nema.org/index_nema.cfm/1427/47168E11–AA56–4B4E–9F329B339C23F115/.* In its supplemental assessment, ORNL used a more accurate analytical model and better transformer market and loading data developed following the publication of ORNL–6827. Downloadable versions of both ORNL reports are available on the DOE Web site at: *http://www.eere.energy.gov/buildings/appliance_standards/distribution_transformers.html.*

As a result of this positive determination, in 2000, the Department developed a Framework Document for Distribution Transformer Energy Conservation Standards Rulemaking, describing the procedural and analytic approaches that the Department anticipated using to evaluate the establishment of energy conservation standards for distribution transformers. This document is also available on the aforementioned DOE Web site. On November 1, 2000, the Department held a public workshop on the framework document to discuss the proposed analytical framework. Manufacturers, trade associations, electric utilities, environmental advocates, regulators, and other interested parties attended the framework document workshop, actively participating in discussions and showing their willingness to work with DOE on the process of analyzing possible efficiency standards. The major issues discussed were: definition of covered transformer products; definition of product classes; possible proprietary (patent) issues regarding amorphous metal; ties between efficiency improvements and installation costs; baseline and possible efficiency levels; base case trends under deregulation; transformer costs versus transformer prices; appropriate LCC sub-groups; LCC methods, *e.g.*, total owning cost (TOC); loading levels; utility impact analysis vis-a-vis deregulation; scope of environmental assessment; and harmonization of standards with other countries.

Stakeholder comments submitted during the framework document comment period elaborated upon the issues raised at the meeting and also addressed the following issues: Options for the screening analysis; approaches for the engineering analysis; discount rates; electricity prices; the number and basis for the efficiency levels to be analyzed; the NES and NPV analyses; the analysis of the effects of a potential standard on employment; the manufacturer impact assessment; and the timing of the analyses. The Department worked with its contractors to address these issues as well as those raised during the framework document workshop.

As part of the information gathering and sharing process, the Department met with manufacturers of liquid-immersed and dry-type distribution transformers during the first quarter of 2002. The Department met with companies that produced all types of distribution transformers, ranging from small to large manufacturers, and including both NEMA and non-NEMA members. The Department had four objectives for these meetings: (1) Solicit feedback on the methodology and findings presented in the draft engineering analysis update report that the Department posted on its Web site December 17, 2001; (2) get information and comments on production costs and manufacturing processes presented in the December 17, 2001, draft engineering analysis update report; (3) provide an opportunity, early in the rulemaking process, to express specific concerns to the Department; and (4) foster cooperation between the manufacturers and the Department.

There were five general issues discussed at each of these manufacturer site meetings: (1) Company overview and product offerings; (2) the structure of the engineering analysis, including the engineering design lines, which represent groupings of similarly built distribution transformers; (3) design option combinations for each of the representative transformers from the engineering design lines; (4) use of Optimized Program Services (OPS) distribution transformer design software; and (5) the 0.75 scaling rule, used to scale the costs and efficiencies of the representative units within each of the engineering design lines.

The Department incorporated the information gathered at the meetings into its engineering analysis, which is described in more detail in the engineering analysis part of this ANOPR (section II.C), as well as in Chapter 5 of the TSD. Following the publication of the ANOPR and the ANOPR public meeting, the Department may hold additional meetings with manufacturers as part of the consultative process for the manufacturer impact analysis (see section II.J).

As part of its pre-ANOPR analysis process, the Department posted several draft reports on its Web site to solicit stakeholder input. These reports are:

- The Department's initial engineering analysis for design line 1 (Distribution Transformer Rulemaking, Engineering Analysis Update, posted December 17, 2001). This document contains preliminary results of the engineering analysis for design line 1.
- The Department's initial screening analysis (Screening Analysis, posted March 5, 2002). This document discusses various design options for improving the energy efficiency of distribution transformers and describes the reasons for eliminating certain design options from consideration.
- The Department's draft LCC analysis for design line 1 (Distribution Transformer Rulemaking, Life Cycle Cost Analysis, Design Line 1, posted June 6, 2002). This document discusses the methodology and structure of the LCC analysis used for liquid-immersed transformers, along with the basis for various input values and assumptions. It also presents example results from the LCC analysis on a 50 kVA unit.
- The Department's revised engineering analysis for design line 1 (posted June 6, 2002, as Appendix B to the LCC report listed above). This appendix presents a revision of the engineering analysis that the Department originally circulated in December 2001.
- The Department's engineering analysis for medium-voltage dry-type distribution transformers (Distribution Transformer Standards Rulemaking, Draft Report for Review, Engineering Analysis for Dry-type Distribution Transformers and Results on Design Line 9, posted August 23, 2002). This document contains preliminary results of the engineering analysis for design line 9.
- The Department's draft LCC analysis for design line 9 (Distribution Transformer Standards Rulemaking, Draft Report for Review, Dry-type Distribution Transformers, Life Cycle Cost Analysis on Design Line 9, posted October 4, 2002). This document

discusses the methodology and structure of the LCC analysis for dry-type transformers, along with the basis for various input values and assumptions. It also presents sample results from the LCC analysis on a 300 kVA unit.

The Department also posted several spreadsheets while preparing for the ANOPR for early stakeholder review and comment:

- ANOPR engineering analysis results spreadsheets for all 13 design lines (posted April 4, 2003). These spreadsheets summarize the cost and performance of all the designs in the Department's engineering database. One spreadsheet contains the engineering analysis results of the liquid-immersed design lines, and the other contains the dry-type design lines.
- ANOPR LCC spreadsheets for all 13 design lines (posted May 14, 2003). These spreadsheets are used by the Department to calculate the LCC and PBP. The Department conducted a webcast on October 17, 2002, presenting and explaining the basic LCC spreadsheet to stakeholders.

The Department developed two spreadsheet tools for this rulemaking. The first spreadsheet tool calculates LCC and payback periods. Thirteen different LCC and payback period spreadsheets were developed to capture variations in the distribution transformer market. The second spreadsheet tool calculates impacts of candidate standards at various levels on shipments and calculates the NES and NPV at various standard levels. These spreadsheets are posted on the Department's website along with the complete TSD documenting the analyses supporting this ANOPR.

2. Process Improvement

Although the Procedures, Interpretations and Policies for Consideration of New or Revised Energy Conservation Standards for Consumer Products (the ''Process Rule''), 10 CFR Part 430, Subpart C, Appendix A, applies to consumer products, in its Notice of Determination for Distribution Transformers, the Department stated its intent to adhere in this rulemaking to the provisions of the Process Rule, where applicable. 62 FR 54817. In Table I.2, the Department presents the analyses it intends to conduct in its evaluation of standards for distribution transformers.

TABLE I.2.—DISTRIBUTION TRANSFORMERS ANALYSES IN ACCORDANCE WITH THE PROCESS RULE

ANOPR	NOPR	Final rule
Market and technology assessment	Revised ANOPR analyses	Revised analyses.
Screening analysis	Life-cycle cost sub-group analysis	
Engineering analysis	Manufacturer impact analysis	
Energy use and end-use load characterization	Utility impact analysis	
Markups for equipment price determination	Employment impact analysis	
Life-cycle cost and payback period analyses	Environmental assessment	
Shipments analysis	Regulatory impact analysis	
National impact analysis.		

The analyses in Table I.2 reflect methodological improvements made in accordance with the Process Rule, including the development of economic models and analytical tools. For example, this ANOPR uses the full range of consumer marginal energy rates which are the energy rates that correspond to incremental changes in energy use. The LCC analysis also defines a range of energy price forecasts for each fuel used in the economic analyses, and defines a range of primary energy conversion factors and associated emission reductions based on the generation displaced by energy efficiency standards. If timely new data, models, or tools that enhance the development of standards become available, they will be incorporated into this rulemaking.

3. Test Procedure

A test procedure outlines the method by which manufacturers will determine the efficiency of their distribution transformers, and thereby assess compliance with an energy conservation standard. On February 10, 1998, the Department held a workshop on the development of a test procedure for distribution transformers. Representatives from NEMA, manufacturers, utilities, Federal and State agencies, the Canadian government, and other interested parties attended the workshop. The Department presented and discussed draft test procedures based on recognized industry standards. A transcript of the workshop is available at the Building Technologies Program's Resource Room, which is located in Room 1J–018 and is open from 9:00 a.m. to 4:00 p.m., Monday through Friday.

In 1998, NEMA developed and published NEMA Standard TP 2–1998, Standard Test Method for Measuring the Energy Consumption of Distribution Transformers. This publication presents the American National Standards Institute/Institute of Electrical and Electronics Engineers (ANSI/IEEE) industry standard test methods for measuring transformer efficiency, and provides a compliance section that describes how manufacturers can demonstrate that their transformers meet the NEMA Standard TP 1 efficiency ratings.

On November 12, 1998, the Department published a Notice of Proposed Rulemaking (NOPR) for a distribution transformer test procedure; the NOPR solicited comments from stakeholders and announced a public workshop. 63 FR 63360. The NOPR proposed that DOE either incorporate parts of the recognized industry testing standards, or simply adopt NEMA Standard TP 2–1998.

The Department held a public workshop on the proposed test procedure rule on January 6, 1999. Based on the comments received and issues raised, the Department concluded that additional analysis was necessary. On June 23, 1999, the Department reopened the comment period on the proposed rule. 64 FR 33431. This second comment period raised issues and solicited comments on the suitability of NEMA Standard TP 2–1998 for use as the DOE test procedure, the definition of a distribution transformer, the sampling plan to demonstrate compliance, and the suitability of the proposed ''basic model'' definition. The Department is issuing a Supplemental Notice of Proposed Rulemaking (SNOPR) for the test procedure, addressing these comments.

While the process of developing and finalizing a test procedure is ongoing, the Department is working to ensure that activities being conducted under the test procedure SNOPR and the standards rulemaking ANOPR are

synchronized. For example, some of the comments provided by stakeholders through prior public consultation processes on the test procedure contributed directly to the formulation of the distribution transformer definition proposed in this ANOPR.

II. Distribution Transformer Analyses

This section includes a general introduction to each analysis section and a discussion of relevant issues addressed in comments received from interested parties.

A. Market and Technology Assessment

When the Department begins a standards rulemaking, it develops information on the industry structure and market characteristics of the product concerned. This activity consists of both quantitative and qualitative efforts based primarily on publicly available information. The issues addressed in this market and technology assessment include the product definition, product classes, manufacturers, retail market trends, and regulatory and non-regulatory programs. This information serves as resource material for use throughout the rulemaking.

1. Definition of a Distribution Transformer

Section 346 of EPCA authorizes the Department to consider and determine whether an energy conservation standard for ''distribution transformers'' would be technologically feasible and economically justified, and would result in significant energy savings. (42 U.S.C. 6317(a)(1)) But the statute does not define ''distribution transformer.'' At the framework document workshop, the Department interpreted the term ''distribution transformer'' to mean: ''Transformers designed to continuously transfer electrical energy either single phase or three phase from a primary distribution circuit to a secondary distribution circuit, within a secondary distribution circuit, or to a consumer's service circuit; limited to transformers with primary voltage of 480 V to 35 kV, a secondary voltage of 120 V to 600 V, a frequency of 55–65 Hz, and a capacity of 10 kVA to 2500 kVA for liquid-immersed transformers or 5 kVA to 2500 kVA for dry-type transformers.'' The Department subsequently revised this definition based on input from stakeholders, information on transformers commonly understood to be ''distribution transformers,'' and consideration of whether energy conservation standards for such transformers would result in significant energy savings. The revised proposed definition of a distribution transformer is given in section II.A.1.d.

a. Changes to, and Retention of, Provisions in the Framework Document Definition

The proposed definition of a distribution transformer eliminates the lower limits of 480 V and 120 V, on primary voltage and secondary voltage respectively. In its written comments, NEMA advocated that the Department have no lower limits on the primary and secondary voltages of the transformers it evaluates for standards, reflecting the coverage of NEMA TP 1. (NEMA, No. 7 at p. 4 and No. 19 at p. 2) The American Council for an Energy Efficient Economy (ACEEE) agreed with the Department's working definition presented at the framework document workshop, and commented that the scope should be as broad as possible at this stage of the rulemaking. (ACEEE, No. 14 at p. 1) ACEEE strongly disagreed with a comment made during the framework document workshop recommending that the lower threshold for the primary voltage be raised above 480 V. (Public Hearing Transcript, No. 2MM at pp. 27–28) ACEEE pointed out that the Department's Determination Analysis prepared by ORNL showed substantial energy savings resulted from transformers operating in the low voltage class. (ACEEE, No. 14 at p. 1) Consistent with NEMA and ACEEE's comments, the Department is concerned that defining a distribution transformer as having a minimum primary and/or secondary voltage may result in eliminating certain distribution transformers from consideration in the standards rulemaking. The Department also believes that it can include other elements in its definition of ''distribution transformer'' to ensure that its test procedures and standards for transformers would cover only products that are truly ''distribution transformers.'' Therefore, the Department removed the lower bounds on primary and secondary voltage from the definition of distribution transformer.

With regard to the framework document workshop's capacity criteria for defining a distribution transformer (10 to 2500 kVA for liquid-immersed units and 5 to 2500 kVA for dry-type units), the Department received comment that 5 kVA and 10 kVA single-phase, dry-type units are not normally used for distribution purposes, but rather are almost always used in specialized applications related to the consumption of electricity (*i.e.*, power supplies). (NEMA, No. 7 at p. 4) At the framework document workshop, ABB commented that 5 and 10 kVA dry-type units ''just don't make any sense when somebody considers the concept of distribution.'' (Public Hearing Transcript, No. 2MM at p. 28) To accommodate this input, the Department's revised definition of a distribution transformer proposes a lower capacity limit for dry-type units of 15 kVA, excluding dry-type transformers with ratings of 5 and 10 kVA from the standards rulemaking. The Department seeks comment from other stakeholders on whether such transformers should be classified as distribution transformers, and whether it should adopt a different lower capacity limit for dry-type units in the definition of distribution transformer.

The framework document workshop's definition also included ''[t]ransformers designed to continuously transfer electrical energy either single phase or three phase from a primary distribution circuit to a secondary distribution circuit, within a secondary distribution circuit, or to a consumer's service circuit'' (DOE presentation at Framework Document Workshop, No. 2CC at p. 7) The Department is concerned that these criteria may be too vague and imprecise and subject to misinterpretation, and may fail to establish clearly which transformers are, and which are not, covered under EPCA as distribution transformers. This would particularly affect parties that work with distribution transformers in non-utility applications, where the terminology in these criteria, for example, ''to a consumer's service circuit'' may be inapplicable or meaningless. NEMA advocated that the Department adopt a definition of distribution transformer that aligns with the scope of NEMA TP 1. (NEMA, No. 7 at p. 4) The scope provision of TP 1 states that the standard applies to transformers meeting numerical criteria (*e.g.*, voltage, kVA) and then lists specific types of transformers to which the standard does not apply.

The Department has decided to follow the NEMA TP 1 approach in defining a distribution transformer. In addition to having numerical criteria, DOE's proposed definition lists types of transformers that are made for applications unrelated to the distribution of electricity, or for which standards would not produce significant energy savings, and clarifies that they are not ''distribution transformers'' subject to regulation by the Department. Such a definition is clearer, more precise, and less subject to misinterpretation than the framework document workshop's proposed definition. Although the list of excluded

transformers is quite similar to that in NEMA TP 1, DOE has modified it slightly.[1] The Department added definitions for each of these excluded transformers. The Department invites stakeholders to comment on the new distribution transformer definition, the revised scope, the exemptions list, and the exemptions list definitions.

The following transformers were identified in the test procedure NOPR as not being distribution transformers: grounding transformers, machine-tool (control) transformers, regulating transformers, testing transformers, and welding transformers. 63 FR 63370. These transformers are listed as exclusions in the scope provision of NEMA TP 1, and they are not considered in the Department's analysis. Therefore the Department continues to exclude them from its proposed definition of a ''distribution transformer.''

The test procedure NOPR also excluded ''converter and rectifier transformers with more than two windings per phase'' from the definition of distribution transformer and provided definitions for these transformers. 63 FR 63370. Comments submitted to the Department on the test procedure NOPR and the test procedure reopening notice supported these exclusions, as well as the exclusion of rectifier transformers with less than three windings. The Department now believes that the specific exclusion of converter transformers is unnecessary. The definition of distribution transformer includes an upper limit on capacity of 2500 kVA, and it is the Department's understanding that a transformer connected to a converter, *i.e.*, a converter transformer, always has a capacity far above this level. Thus, converter transformers are excluded due to the upper-bound on the kVA range of a distribution transformer. The Department is also proposing to adopt the definition of ''rectifier transformer'' that was recently incorporated into IEEE C57.12.80–2002, Clause 3.379, rather than the definition proposed in the test procedure NOPR. The Department believes the IEEE definition will be more widely understood and accepted, without any loss of technical precision.

b. Exclusions Discussed in the Test Procedure Reopening Notice

The test procedure reopening notice stated that the Department was inclined to exclude autotransformers, and transformers with tap ranges greater than 15 percent, from the definition of distribution transformer. 64 FR 33433–34. The notice identified comments in the test procedure NOPR that advocated these exclusions and the Department's reasons for favoring them. The Department received no comments opposed to these exclusions. Therefore, these exclusions are included in the proposed definition.

The Department also discussed in the test procedure reopening notice whether it should exclude sealed or non-ventilated transformers, special impedance transformers, and harmonic transformers from the definition of distribution transformer. 64 FR 33433–34. Each of these types of transformer could be considered to be a distribution transformer. The Department stated in the reopening notice that it did not find persuasive the reasons commenters had advanced for excluding these products, and that it intended to include them unless it received additional information adequate to justify their exclusion. Concerning non-ventilated or sealed transformers, NEMA commented that the unique features of these transformers could pose a hardship for some manufacturers in testing them, and that they are a small part of the market for distribution transformers. (NEMA, No. 46 at p. 5) Given their small market share, it appears that adopting standards for non-ventilated or sealed transformers would not result in significant energy savings. Thus, DOE is excluding them from the proposed definition of distribution transformer. The Department specifically requests comments, however, on whether such exclusion is warranted.

With respect to special impedance distribution transformers, NEMA stated that they have much higher load losses than standard impedance distribution transformers, and are designed to meet unusual performance functions. (NEMA, No. 46 at p. 5) NEMA also asserted that, because they are relatively expensive to build, a lack of Federal efficiency standards for these products would not cause them to be manufactured and sold in increased volumes as substitutes for standard distribution transformers that were subject to standards. (NEMA, No. 45 at p. 2) The Department agrees with these points. It also believes that the market for these products is very small and that therefore regulating them would not result in significant energy savings. For these reasons, the Department is excluding special impedance transformers from its definition of a distribution transformer.

The Department questions the validity of NEMA's claim that any transformer with an impedance outside the range of four to eight percent is a special impedance transformer. To address this issue, the Department is proposing a definition for ''special impedance transformer'' that incorporates tables which set forth the normal impedance range at each standard kVA rating for liquid-immersed and dry-type transformers. DOE would consider any transformer built with an impedance rating outside the ranges defined as normal is considered special impedance, and is excluded from the definition of distribution transformer. The Department requests comments from stakeholders, particularly manufacturers, on the normal impedance ranges shown in these tables (see Tables II.1 and II.2) of ''special impedance transformers.''

The Department understands that there are two types of harmonic distribution transformers, those that correct harmonics (harmonic mitigating transformers) and those that simply tolerate, and do not correct, harmonics (called harmonic-tolerating or K-factor transformers). Two companies requested that DOE exclude harmonic-mitigating transformers from the standards rulemaking. (MIRUS International, No. 10 at p. 1; Hammond Power Solutions, No. 11 at p. 1) The companies requested the exclusion because these transformers have three or six windings per phase, and the complexity of the windings and the need to limit the temperature rise created by the harmonics when the transformer is in service makes it extremely difficult for them to meet an efficiency standard. The Department agrees with these comments, also noting that harmonic-mitigating transformers are designed for special conditions and provide a unique customer utility. The Department believes few of these transformers exist in the distribution system, regulating them would save little energy, and

[1] The proposed definition of ''distribution transformer'' incorporates almost verbatim 13 of the 17 exclusions set forth in NEMA TP 1. (The list of exclusions from TP 1 appears on page one of the document.) NEMA TP 1, however, also excludes ''transformers designed for high harmonics'' and ''harmonic transformers,'' but today's proposed definition addresses these transformers by excluding ''harmonic mitigating transformers'' and certain ''K-factor'' (harmonic tolerating) transformers. In addition, although TP 1 excludes ''retrofit transformers'' and ''regulation transformers,'' the proposed rule excludes neither—the former for reasons discussed in the ANOPR text and the latter because DOE believe they are more accurately described as ''regulating transformers,'' which are already in the list of exclusions in NEMA TP 1. In addition, NEMA TP 1 excludes ''non-distribution transformers, such as UPS [uninterruptible power supply] transformers.'' Although the proposed definition excludes uninterruptible power supply transformers, the portion of this exclusion referring to ''non-distribution transformers'' is vague and the Department believes its inclusion in the regulations would undercut the precision achieved by listing specific types of transformers as being excluded from the definition of ''distribution transformer.''

excluding them would be unlikely to create loopholes in the regulation. Consequently, the Department is excluding harmonic-mitigating transformers from this rulemaking.

The situation with harmonic tolerating (K-factor) transformers is not so clear cut. These transformers are designed for use in industrial situations where electronic devices can cause transformer losses that are much higher than normal, and they are designed to accommodate such losses without excessive temperature rise. But the Department found that it can be economically viable to use K-factor distribution transformers that have low K-factors and relatively low efficiencies, instead of regular distribution transformers with higher efficiencies in standard applications. For example, as of 1999, Minnesota adopted a building code requirement that all distribution transformers installed in the State meet the NEMA TP 1 efficiency levels, with an exemption for specific transformers excluded from TP 1, including K-factor transformers (see Chapter 3 of TSD). These K–4 transformers had efficiencies that were not only below the levels mandated by NEMA TP 1, they were also below the prevailing efficiency levels of conventional transformers that had been installed in Minnesota before the State's adoption of TP 1. As the K rating of K-factor transformers increases, however, they become increasingly sophisticated and expensive to produce, and their share of the total transformer market diminishes. Thus, the risk that high K-factor rated transformers would be used in place of more efficient transformers declines, and the potential energy savings from regulating them becomes insignificant.

Above the K–4 rating, K–9 and K–13 are the next higher standard K-factor rated transformers. The Department believes that while K–9 products are a small part of the market, it is uncertain whether, absent standards for them, K–9 distribution transformers would replace transformers that are subject to standards (as happened in Minnesota with K–4 transformers). The Department is aware that K-factor transformers at K–13 and higher are significantly more expensive than conventional transformers, and believes it is very unlikely they would be purchased in place of distribution transformers subject to standards. Thus, the Department's proposed definition excludes transformers with a K-factor rating of K–13 or higher, and includes K-factor transformers with lower K-factor ratings (*e.g.*, K–4 and K–9). The Department specifically invites comments on this issue.

Finally, the Department believes that ''retrofit distribution transformer'' could refer to any transformer that replaces an existing distribution transformer. That said, the Department understands that the phrase may refer to a distribution transformer that replaces an existing transformer. This replacement transformer design may specify that the primary and secondary terminals are compatible with existing switchgear, or that the transformer incorporates necessary features or performance characteristics that differ from conventional designs. Comments on the test procedure NOPR asserted that the Department's exclusions from the definition of distribution transformer should provide for situations where existing distribution transformers cannot be replaced with more efficient retrofit transformers, which generally would be larger or configured differently from the existing transformers. In the reopening notice of the test procedure, the Department requested further, more detailed information on this issue. 64 FR 33434. The Department has not received such information. Clearly, retrofit distribution transformers are distribution transformers, but the Department lacks the basis for creating an exclusion for them in the proposed definition. The Department requests stakeholder comment on this issue, specifically information on the nature of and dimensional restrictions for retrofit transformers.

c. Additional Exclusions Drawn From NEMA TP 1

In addition to excluding from the Department's scope the types of transformers discussed in sections II.A.1.a and b of this ANOPR, NEMA TP 1 also excludes drive (isolation), traction-power, and uninterruptible power supply transformers. A drive or isolation transformer is a type of distribution transformer that is specially designed to accommodate added loads of drive-created harmonics and mechanical stresses caused by an alternating current or direct current motor drive. Although intrinsically they have lower efficiencies than conventional distribution transformers, DOE understands that they also have low sales volumes. Therefore, the Department believes that issuing standards for this product would not result in significant energy savings and is proposing to exclude them from the definition of distribution transformer. In addition, the Department notes that there are many kinds of drive transformers, and developing the varied test methods and multiple standard levels necessary to achieve even the limited energy savings possible for this product would be a complex undertaking.

As for traction-power transformers, these are designed to supply power to railway trains or municipal transit systems at frequencies of 16⅔ or 25 Hz in an alternating current circuit or as a rectifier transformer. These transformers are excluded from the proposed definition of distribution transformer by provisions discussed above that exclude both transformers operating at these low frequencies as well as rectifier transformers. Therefore, DOE need not consider additional specific exclusions for these transformers.

Finally, an uninterruptable power supply transformer is not a distribution transformer. It does not step down voltage, but rather it is a component of a power conditioning device. The uninterruptable power supply transformer is used as part of the electric supply system for sensitive equipment that cannot tolerate system interruptions or distortions, and counteracts such irregularities. Therefore, the Department will exclude uninterruptable power supply transformers from the distribution transformer definition.

d. Distribution Transformer Definition

As noted above, the Department's proposed definition of ''distribution transformer'' is accompanied by specific definitions for each of the transformers excluded from the overall definition. This will clarify which transformers are covered by the standards in this rulemaking. For seven of the transformers excluded from the Department's definition of a distribution transformer, definitions were adapted from IEEE C57.12.80–2002: autotransformers, grounding transformers, machine-tool (control) transformers, non-ventilated transformers, rectifier transformers, regulating transformers, and sealed transformers. For K-factor transformers, the definition is adapted from Underwriters Laboratories (UL) UL1561 and UL1562. The Department developed its own definitions for drive (isolation), the harmonic mitigating, special-impedance, testing, tap ranges greater than 15 percent, uninterruptible power supply and welding transformers based on industry catalogues, practice and nomenclature.

The Department proposes the following definition for a distribution transformer:

Distribution transformer means a transformer with a primary voltage of equal to, or less than, 35 kV; a

secondary voltage equal to, or less than, 600 V; a frequency of 55–65 Hz; and a capacity of 10 kVA to 2500 kVA for liquid-immersed units and 15 kVA to 2500 kVA for dry-type units, and does not include the following types of transformers: (1) Autotransformer; (2) drive (isolation) transformer; (3) grounding transformer; (4) harmonic mitigating transformer; (5) K-factor transformer; (6) machine-tool (control) transformer; (7) non-ventilated transformer; (8) rectifier transformer; (9) regulating transformer; (10) sealed transformer; (11) special-impedance transformer; (12) testing transformer; (13) transformer with tap range greater than 15 percent; (14) uninterruptible power supply transformer; or (15) welding transformer.

Autotransformer means a transformer that: (a) Has one physical winding that consists of a series winding part and a common winding part; (b) has no isolation between its primary and secondary circuits; and (c) during step-down operation, has a primary voltage that is equal to the total of the series and common winding voltages, and a secondary voltage that is equal to the common winding voltage.

Drive (isolation) transformer means a transformer that: (a) isolates an electric motor from the line; (b) accommodates the added loads of drive-created harmonics; and (c) is designed to withstand the additional mechanical stresses resulting from an alternating current adjustable frequency motor drive or a direct current motor drive.

Grounding transformer means a three-phase transformer intended primarily to provide a neutral point for system-grounding purposes, either by means of: (a) A grounded wye primary winding and a delta secondary winding; or (b) an autotransformer with a zig-zag winding arrangement.

Harmonic mitigating transformer means a transformer designed to cancel or reduce the harmonics drawn by computer equipment and other non-linear power electronic loads.

K-factor transformer means a transformer with a K-factor of 13 or greater that is designed to tolerate the additional eddy-current losses resulting from harmonics drawn by non-linear loads, usually when the ratio of the non-linear load to the linear load is greater than 50 percent.

Machine-tool (control) transformer means a transformer that is equipped with a fuse or other overcurrent protection device, and is generally used for the operation of a solenoid, contactor, relay, portable tool, or localized lighting.

Non-ventilated transformer means a transformer constructed so as to prevent external air circulation through the coils of the transformer while operating at zero gauge pressure.

Rectifier transformer means a transformer that operates at the fundamental frequency of an alternating-current system and that is designed to have one or more output windings connected to a rectifier.

Regulating Transformer means a transformer that varies the voltage, the phase angle, or both voltage and phase angle, of an output circuit and compensates for fluctuation of load and input voltage, phase angle or both voltage and phase angle.

Sealed Transformer means a transformer designed to remain hermetically sealed under specified conditions of temperature and pressure.

Special-impedance transformer means any transformer built to operate at an impedance outside of the normal impedance range for that transformer's kVA rating. The normal impedance range for each kVA rating is shown in Tables II.1 and II.2:

TABLE II.1.—NORMAL IMPEDANCE RANGES FOR LIQUID-IMMERSED TRANSFORMERS

kVA	Impedance (%)
Single-Phase Transformers	
10	1.0–4.5
15	1.0–4.5
25	1.0–4.5
37.5	1.0–4.5
50	1.5–4.5
75	1.5–4.5
100	1.5–4.5
167	1.5–4.5
250	1.5–6.0
333	1.5–6.0
500	1.5–7.0
667	5.0–7.5
833	5.0–7.5
Three-Phase Transformers	
15	1.0–4.5
30	1.0–4.5
45	1.0–4.5
75	1.0–5.0
112.5	1.2–6.0
150	1.2–6.0
225	1.2–6.0
300	1.2–6.0
500	1.5–7.0
750	5.0–7.5
1000	5.0–7.5
1500	5.0–7.5
2000	5.0–7.5
2500	5.0–7.5

TABLE II.2.—NORMAL IMPEDANCE RANGES FOR DRY-TYPE TRANSFORMERS

kVA	Impedance (%)
Single-Phase Transformers	
15	1.5–6.0
25	1.5–6.0
37.5	1.5–6.0
50	1.5–6.0
75	2.0–7.0
100	2.0–7.0
167	2.5–8.0
250	3.5–8.0
333	3.5–8.0
500	3.5–8.0
667	5.0–8.0
833	5.0–8.0
Three-Phase Transformers	
15	1.5–6.0
30	1.5–6.0
45	1.5–6.0
75	1.5–6.0
112.5	1.5–6.0
150	1.5–6.0
225	3.0–7.0
300	3.0–7.0
500	4.5–8.0
750	5.0–8.0
1000	5.0–8.0
1500	5.0–8.0
2000	5.0–8.0
2500	5.0–8.0

Testing Transformer means a transformer used in a circuit to produce a specific voltage or current for the purpose of testing electrical equipment. This type of transformer is also commonly known as an instrument transformer.

Transformer with Tap Range greater than 15 percent means a transformer with a tap range in the primary winding greater than the range accomplished with six 2.5-percent taps, 3 above and 3 below the rated primary voltage (*e.g.*, 6 times 2.5 percent = 15 percent).

Uninterruptible Power Supply Transformer means a transformer that supplies power to an uninterruptible power system, which in turn supplies power to loads that are sensitive to power failure, power sags, over-voltage, switching transients, line noise, and other power quality factors.

Welding Transformer means a transformer designed for use in arc welding equipment or resistance welding equipment.

e. Exclusions Not Incorporated

Howard Industries, Edison Electric Institute (EEI), Southern Company, and TXU Electric and Gas all submitted comments requesting that liquid-filled transformers be excluded from the

rulemaking. (Howard Industries, No. 4 at p. 2; EEI, No. 6 at p. 1; Southern Company, No. 8 at p. 5; TXU Electric and Gas, No. 12 at p. 1) One reason cited for EEI's request is the fact that in a deregulated electricity market, the energy saving benefits will accrue to the energy service provider, while the additional capital equipment cost will be borne by the utility distribution company. (EEI, No. 6 at pp. 2–3) Southern Company requested that liquid-immersed transformers be excluded from the rulemaking because the energy savings potential is only one-quarter the total energy savings estimate in the Determination Analysis, and because many utilities choose to buy transformers below TP 1 levels for their own economic reasons. (Southern Company, No. 8 at p. 5)

The Natural Resources Defense Council (NRDC) countered these requests in their comments, noting that at the framework document workshop, several commenters identified a trend stemming from restructuring in the electric utility industry, which is causing fewer and fewer electricity providers to use a lowest TOC method for purchasing transformers, thereby causing liquid-immersed transformer efficiencies to decline. NRDC sees this trend as a market failure that requires Federal standards to correct the problem. (NRDC, No. 5 at p. 4) NRDC urged DOE to consider the widest possible scope for transformer efficiency standards in doing its analysis. (NRDC, No. 5 at p. 6)

At this time, the Department is not excluding liquid-immersed transformers from the scope of the rulemaking. The Department is charged with determining whether standards for distribution transformers are technologically feasible and economically justified and would result in significant energy savings. No one has argued that liquid-immersed transformers are not distribution transformers, and therefore that they fall outside the scope of the Department's statutory authority. Furthermore, DOE is not able to conclude, based on the data and information available to it, that standards for liquid-immersed transformers are not technologically feasible nor economically justified, or that standards for this equipment would not result in significant energy savings. Thus, the Department will be investigating whether the inclusion of liquid-immersed standards is warranted.

2. Product Classes

In general, when evaluating and establishing energy efficiency standards, the Department divides covered products into classes by: (a) the type of energy used; (b) capacity; and (c) performance-related features that affect consumer utility or efficiency. Different energy efficiency standards may apply to different product classes. The Department has received some guidance from stakeholders on establishing appropriate product classes for the population of distribution transformers.

Howard Industries stated that liquid-immersed distribution transformers should not be categorized with dry-type distribution transformers. (Howard Industries, No. 4 at p. 2) Cooper Power Systems believes that the Department should set one standard for all distribution transformers and not treat liquid-immersed and dry-type transformers separately. (Cooper Power Systems, No. 34 at p. 1) The Department recognizes that liquid-immersed and dry-type units have different physical construction and different end-use applications. Generally, liquid-immersed units are filled with mineral oil and are used in outdoor installations (*e.g.*, concrete pad or pole-mounted). The Department recognizes that dry-type units are generally used for indoor applications and must comply with the safety requirements of the National Electrical Code (ANSI/National Fire Protection Association Standard 70). Due to these differences in performance-related features that affect consumer utility, the Department is tentatively planning to have separate efficiency standards for liquid-immersed and dry-type distribution transformers, and to treat them as two distinct product classes.

NEMA recommended that the Department use the product classes given in TP 1, which are based on the type of transformer (liquid or dry), the number of phases (1 or 3), voltage (low or medium) and the kVA rating. (NEMA, No. 7 at p. 5) ACEEE supported the Department's use of the product classes in TP 1, since this standard is now extensively used by manufacturers, the ENERGY STAR'' program administered by DOE and the Environmental Protection Agency (EPA), and voluntary programs operated by utilities and other organizations in association with the Consortium for Energy Efficiency's transformer initiative. (ACEEE, No. 14 at p. 2) The Department agrees with these comments and intends to use NEMA TP 1 product classes for all transformers except medium-voltage, dry-type units.

NEMA noted in a comment that medium-voltage, dry-type transformers may be separated into two groups, based on their Basic Impulse Insulation Level (BIL). (NEMA, No. 7 at p. 6) At that time, NEMA indicated it was considering revising TP 1–1996 and splitting the standard levels for medium-voltage, dry-types into two groups. NEMA later confirmed that it did adopt this modification for TP 1–2002, establishing one standard for medium-voltage, dry-types less than or equal to 60 kV BIL and a separate standard for those units greater than 60 kV BIL. (NEMA, No. 26 at p. 1)

The Department understands that the reason for this revision to TP 1 is that the efficiency of a dry-type, medium-voltage transformer varies in part due to the level of insulation in its windings (the BIL rating). If one efficiency level were assigned to all BIL levels, it would be a relatively weak standard for low BIL ratings and an extremely difficult standard for higher BIL ratings. Implementing one standard across all dry-type, medium-voltage BIL ratings could result in driving the market toward a BIL rating lower than it would otherwise be in the absence of a standard.

However, at this time, the Department is concerned that simply using two BIL groupings as used in TP 1–2002 (<60 kV BIL and >60 kV BIL) may not result in appropriate efficiency levels for all types of medium-voltage, dry-type transformers. Thus, for the ANOPR, the Department based its analysis on a slightly finer resolution of BIL levels and created three classifications: 20–45 kV BIL, 46–95 kV BIL, and >96 kV BIL. In this way, candidate standard levels will be more accurately suited to the covered transformers. The Department requests comments from stakeholders on this decision to create three BIL classifications rather than the two in NEMA's TP 1–2002.

TXU Electric and Gas recommended that the Department separate liquid-immersed and dry-type distribution transformers, and then further separate liquid-immersed transformers into commercial and industrial end users, and residential end users. (TXU Electric and Gas, No. 12 at p. 5) TXU Electric and Gas made this recommendation because it believes the loading profiles of a transformer supplying a residential load versus one supplying a commercial or an industrial load could be dramatically different. The Department cannot accommodate this request as standards cannot be promulgated separately based on the particular uses made by individual users. However, the Department does address sectoral (end-user) issues such as load profiles and energy prices in the LCC analysis (see Chapter 8 of the TSD).

Table II.3 presents the Department's proposed product classes.

TABLE II.3.—PROPOSED DISTRIBUTION TRANSFORMER PRODUCT CLASSES

Number	Insulation	Voltage	Phases	BIL rating	kVA range
1	Liquid-Immersed.	Medium	Single		10–833 kVA
2	Liquid-Immersed.	Medium	Three		15–2500 kVA
3	Dry-Type	Low	Single		15–333 kVA
4	Dry-Type	Low	Three		15–1000 kVA
5	Dry-Type	Medium	Single	20–45kV BIL	15–833 kVA
6	Dry-Type	Medium	Three	20–45kV BIL	15–2500 kVA
7	Dry-Type	Medium	Single	46–95kV BIL	15–833 kVA
8	Dry-Type	Medium	Three	46–95kV BIL	15–2500 kVA
9	Dry-Type	Medium	Single	≥96kV BIL	75–833 kVA
10	Dry-Type	Medium	Three	≥96kV BIL	225–2500 kVA

3. Market Assessment

The liquid-immersed transformer market accounted for 77 percent of the distribution transformers sold in the United States in 2001 (on a unit basis). These transformers accounted for 74 percent of the distribution transformer capacity measured in megavolt-amperes (MVA), and 78 percent of the dollar value of the 2001 shipments. On a unit basis, more than 90 percent of the liquid-immersed shipments are single-phase units. However, these single-phase units tend to have lower kVA ratings than the three-phase units, which are more than half of the total MVA capacity shipped of liquid-immersed distribution transformers in 2001.

In the dry-type market, low-voltage, three-phase distribution transformers dominate, accounting for 91 percent of units and 78 percent of MVA shipped. Medium-voltage, three-phase units accounted for only one percent of the units shipped, but were 18 percent of MVA shipments in 2001. The low-voltage, single-phase units were about 7 percent of the dry-type units shipped; however, because their kVA ratings tend to be small, they only accounted for about 3.5 percent of the cumulative dry-type MVA shipments in 2001. Medium-voltage, single-phase units occupy a small part of the market, representing less than one-half of one percent of both units and MVA shipped. A detailed estimate of total national shipments of distribution transformers for 2001 can be found in the shipments analysis, section II.G and in Chapter 9 of the TSD.

Market characteristics related to efficiency trends indicate that distribution transformer efficiencies are decreasing. ORNL identified this trend for dry-type transformers in its Determination Analysis, noting that over the last two decades, efficiency of dry-type units has declined. ORNL indicated that part of the reason for this trend was a focus on lowest first-cost units, because contractors purchasing the units would not benefit directly from the energy savings. For liquid-immersed distribution transformers, NEMA commented that a few years ago nearly 100 percent of utility transformers sold met or exceeded the TP 1 efficiency standard. NEMA estimates that in the liquid-immersed market, the percentage of TP 1 compliant units in 2002 dropped to about 50 percent. (NEMA, No. 26 at p. 3) NEMA's comment is consistent with comments made at the framework document workshop by TXU Electric and Gas and Southern Company that deregulation of electric utilities is shifting the liquid-immersed market toward less efficient, lower first-cost distribution transformers. (Public Hearing Transcript, No. 2MM at pp. 66–69) The Department is concerned that the liquid-immersed market may be following the dry-type market, moving toward less energy efficient units.

4. Technology Assessment

The technology assessment provides the technical background and structure on which the engineering analysis is based. The Department based its list of technologically feasible design options on input from manufacturers, component suppliers, trade publications, and technical papers. The technology assessment for this rulemaking incorporates input from eight manufacturers and one component supplier visited by the Department, as well as written comments.

Table II.4 is adapted from the ORNL study, Determination Analysis of Energy Conservation Standards for Distribution Transformers, ORNL–6847, 1996. This table summarizes the methods of making a transformer more efficient by reducing the number of watts lost in the core (no-load) and winding (load), and the associated inter-relational issues. The engineering analysis examined the options shown in this table (see Chapter 5 of the TSD).

Nearly all the energy consumed by distribution transformers is lost in the core and the winding assemblies. Design modifications that reduce losses in the core may cause an increase in winding losses; conversely, modifications to the design that reduce losses in the windings may increase losses in the core.

TABLE II.4.—OPTIONS AND IMPACTS OF INCREASING TRANSFORMER EFFICIENCY

	No-load losses	Load losses	Cost impact
To decrease no-load losses			
Use lower-loss core materials	Lower	No change*	Higher.
Decrease flux density by:			
(a) Increasing core cross-sectional area (CSA)	Lower	Higher	Higher.
(b) Decreasing volts per turn	Lower	Higher	Higher.
Decrease flux path length by decreasing conductor CSA.	Lower	Higher	Lower.

TABLE II.4.—OPTIONS AND IMPACTS OF INCREASING TRANSFORMER EFFICIENCY—Continued

	No-load losses	Load losses	Cost impact
To decrease load losses			
Use lower-loss conductor material	No change	Lower	Higher.
Decrease current density by increasing conductor CSA	Higher	Lower	Higher.
Decrease current path length by:			
(a) Decreasing core CSA	Higher	Lower	Lower.
(b) Increasing volts per turn	Higher	Lower	Lower.

*Amorphous-core materials would result in higher load losses.

B. Screening Analysis

The purpose of the screening analysis is to identify design options that improve distribution transformer efficiency and to determine which options to evaluate and which options to screen out. The Department consults with industry, technical experts, and other interested parties in developing a list of design options for consideration. It then applies the following set of screening criteria to determine which design options are unsuitable for further consideration in the rulemaking (10 CFR Part 430, Subpart C, Appendix A at 4(a)(4) and 5(b)):

(1) Technological feasibility. Technologies incorporated in commercial products or in working prototypes will be considered technologically feasible;

(2) Practicability to manufacture, install, and service. If mass production of a technology in commercial products and reliable installation and servicing of the technology could be achieved on the scale necessary to serve the relevant market at the time of the effective date of the standard, then that technology will be considered practicable to manufacture, install and service;

(3) Adverse impacts on product utility or product availability. If a technology is determined to have significant adverse impact on the utility of the product to significant subgroups of consumers, or result in the unavailability of any covered product type with performance characteristics (including reliability), features, sizes, capacities, and volumes that are substantially the same as products generally available in the U.S. at the time, it will not be considered further; and

(4) Adverse impacts on health or safety. If it is determined that a technology will have significant adverse impacts on health or safety, it will not be considered further.

By applying these screening criteria to a comprehensive list of design options, the Department developed the following list of efficiency-related enhancements to examine in the engineering analysis:

- Differing conductor coil materials: aluminum and copper in wire and foil configurations;
- Differing core materials: cold-rolled, high-silicon (CRHiSi) steel; CRHiSi domain-refined steels; and amorphous materials in wound core;
- Varying design dimensions: flux density (B); current density (J); volts/turn; voltage spacings; frame/coil dimensions; shape; cooling channels (number and location); insulating materials; and shell or core form, stacked or wound; and
- Using different construction techniques: core cutting; core stacking; core lapping or butting of joints; coil winding; and low voltage-high voltage winding pattern.

The Department is not considering the following design options because they do not meet one or more of the aforementioned four screening criteria: Silver as a conductor material; high-temperature superconductors; amorphous core material in stacked core configuration; carbon composite materials for heat removal; high-temperature insulating material; and solid-state (power electronics) technology. Discussion of the application of the screening criteria to these design options appears in Chapter 4 of the TSD.

The Department received stakeholder comments relating to the screening analysis during and after the Distribution Transformer Framework Workshop, November 1, 2000. One issue raised by ABB during the workshop related to screening out sole-source technology. The Department responded by stating that it would not set a standard that required sole-source technology for compliance. (Public Hearing Transcript, No. 2MM at pp. 96–98) ABB also commented that an ''off-the-wall'' technology (*e.g.*, superconductors) should be screened out. NRDC responded to ABB by observing that technologies often are more realistic than they initially appear. (Public Hearing Transcript, No. 2MM at pp. 98–104) However, upon further analysis and consultation with experts (see Chapter 4 of the TSD), the Department made the decision to screen out superconducting materials.

In its written comments submitted to the Department for the framework document, NEMA commented that superconducting winding and power electronics should be screened out. (NEMA, No. 7 at p. 7) The Department considered these as it analyzed all the design options available to make transformers more efficient, and agreed that both superconducting material and solid-state (power electronics) should be screened out.

C. Engineering Analysis

The purpose of the engineering analysis is to evaluate a range of transformer efficiency levels and associated manufacturing costs. The engineering analysis considers technologies and design option combinations not eliminated in the screening analysis. The LCC analysis uses the cost-efficiency relationships developed in the engineering analysis.

The Department typically structures its engineering analysis around one of three methodologies. These are: (1) The design-option approach, calculating the incremental costs of adding specific design options to a baseline model; (2) the efficiency-level approach, calculating the relative costs of achieving energy efficiency improvements; and/or (3) the reverse-engineering or cost-assessment approach, which involves a ''bottoms-up'' manufacturing cost assessment based on a detailed bill of materials derived from transformer tear-downs. At the framework document workshop, the Department solicited comments to determine which would be the best approach to follow in the engineering analysis.

1. Approach Taken in the Engineering Analysis

There was no clear consensus among the respondents at the November 2000 framework document workshop regarding the most appropriate approach to pursue in the engineering

analysis. NEMA believes that the efficiency-level approach is by far the superior method, noting that both the design-option and cost-assessment approaches require the estimation of manufacturing costs by people who are not experts in the art and science of transformer design and manufacturing. NEMA recommended the efficiency-level approach, where manufacturers provide data on the relationship between cost and efficiency. (NEMA, No. 7 at p. 8) TXU Electric and Gas agreed with NEMA that the efficiency-level approach would be the most appropriate for this product. (TXU Electric and Gas, No. 12 at p. 6)

ACEEE recommended that the Department follow the cost assessment approach, as it has proven more accurate and reliable in prior rulemakings. (ACEEE, No. 14 at p. 3) However, the Department did not consider this recommendation feasible, as the cost assessment approach would require purchasing large quantities of distribution transformers, disassembling them, and determining the additional cost involved in making one design more efficient than another. As the energy efficiency of a transformer is linked to its core dimensions, number of turns, and other design modifications, including alternative core steels or winding materials, this approach would be extremely expensive and difficult to implement, while maintaining sufficient levels of accuracy.

While studying the various approaches and respondents' comments relating to the engineering analysis, the Department learned that the transformer manufacturing industry commonly uses computer software to design a distribution transformer to fill a customer's order. The software-design approach is founded on market dynamics, described in Chapter 3 of the TSD, where customers issue performance characteristics in a contract tender and manufacturers compete for the award based on designs they generate using their computer software and current material costs. The Department used transformer design software to create a database of distribution transformer designs spanning a range of efficiencies, while tracking all the modifications to the core, coil, labor, and other key cost components. This method is referred to as the ''modified design-option approach'' because the design software calculates the incremental costs of improving or changing a design or changing the combination of materials to improve the efficiency. The Department selected software developed by an independent company not associated with any one manufacturer or manufacturer's association. This company, OPS, conducted the design runs spanning a range of efficiencies for the Department's engineering analysis.

The Department published a draft engineering analysis update report in December 2001, incorporating the initial design runs from OPS on one of the representative units. The Department received comments from manufacturers, consultants, and other stakeholders suggesting revisions to the software input parameters and assumptions. The losses reported for the evaluated designs were found to be too high, particularly in comparison to other publicly available data as found in the ORNL Determination Analysis report or an ENERGY STAR® / NEMA TP 1 unit. (AK Steel, No. 18 at pp. 1–2) Similarly, core destruction factors were high, in the range of 12 to 20 percent. (AK Steel, No. 18 at p. 2) The Department discussed these comments with OPS, and made modifications to the software inputs to correct for the high losses and destruction factor. AK Steel also suggested that OPS review its core lamination factors, which appeared to be low and somewhat inconsistent. (AK Steel, No. 18 at p. 3) The Department consulted with OPS and adjusted the lamination factors to make them consistent and bring them more in line with industry factors. NEMA commented that its members would comment directly on the draft analysis when they hosted plant visits from the Department in early 2002. (NEMA, No. 19 at p. 2) At these meetings, manufacturers made recommendations to the Department to fine-tune the OPS software and adjust some of the material prices and markups. In total, the Department met with eight transformer manufacturers and one component supplier in early 2002, not all of which are NEMA members.[2] The Department worked with OPS to incorporate these revisions to the software inputs before conducting the ANOPR computer design runs.

The Department published revised, draft liquid-immersed engineering analysis results on June 5, 2002, as an appendix to the report Distribution Transformer Rulemaking—Life-Cycle Cost Analysis, Design Line 1. AK Steel submitted comments on the revised draft engineering analysis, indicating that the temperature rise in all three example designs included in the appendix were reported to be 55°C rather than the expected 65°C. (AK Steel, No. 36 at p. 1) The Department investigated this problem and learned that the temperature rise reported in the documentation was not the temperature rise used in the software design program. The designs were created using a 20°C ambient and 65°C temperature rise; however, when the design specification report was created, a 30°C ambient temperature had been mistakenly entered, which forced the reported temperature rise to be 55°C. Thus, the design was created with a 65°C rise, but inadvertently reported as 55°C. This typographical error was confirmed upon careful review of the design reports and documentation produced for the appendix of the draft report.

The Department also published a draft engineering analysis, Distribution Transformer Standards Rulemaking, Draft Report for Review, Engineering Analysis for Dry-type Distribution Transformers and Results on Design Line 9, on August 23, 2002, which provided preliminary results on one of the dry-type representative units. An AK Steel comment on the designs presented in this report noted a typographical error concerning a parenthetical description of H–0 core steel as a laser-scribed M3, when in fact H–0 is a 9-mil high permeability grain-oriented steel produced in a laser-scribed condition. (AK Steel, No. 29 at p. 1) AK Steel also found that the core destruction factors were high for these designs, ranging between 24 percent and 38 percent. (AK Steel, No. 29 at p. 2) The Department discussed this with OPS, and modified the software inputs to reduce the core destruction factors. AK Steel also noted that the core stacking rate used in the designs was four inches per hour, and showed that the rate should not be constant, but should vary with the thickness of the core steel. (AK Steel, No. 29 at p. 1) The Department acknowledges that this is a simplification in the engineering analysis of dry-type distribution transformers that was implemented after discussing with OPS the labor estimate part of the manufacturing cost. However, labor assembly times vary widely across all the dry-type manufacturing companies in the United States (due to differing levels of

[2] During the first quarter of 2002, the Department met with eight distribution transformer manufacturers, including ABB Power Technology Products Division USA (both a liquid-immersed plant and a dry-type plant), Acme Electric Corporation, Cooper Power Industries, Federal Pacific Transformer Company, Howard Industries Inc., Jefferson Electric Inc., Kuhlman Electric Corporation, and Square-D Company. The Department also met with AK Steel, a core steel manufacturer. Together, representatives of these nine companies contributed more than 60 hours of presentations, interviews, and plant tours to the Department's engineering analysis.

automation). By using one value for the core stacking rate, the Department approximates what the labor costs are for an average transformer company rather than any one in particular. The Department invites further comments on the issue of stacking rates and use of differential times for varying thicknesses of core steels.

2. Simplifying the Analysis

NEMA has 99 different efficiency levels in its TP 1–2002 document, covering both liquid-immersed and dry-type distribution transformers, single- and three-phase ratings, and spanning the kVA ranges and insulation levels.

NEMA commented that there are too many classes on which to conduct detailed analyses, and the Department should select a limited number of representative units for detailed analysis. (NEMA, No. 7 at p. 5) The Department agrees that it would be impractical to conduct a detailed analysis of the cost-efficiency relationships on each kVA rating of distribution transformers, and worked to develop an approach that would simplify the analysis while keeping a sufficient degree of technical accuracy. The Department consulted with industry representatives and transformer design engineers, and developed an understanding of the construction techniques typically employed in the transformer manufacturing industry. It found that many of the kVA ratings share similar design and construction principles, such that within a given product class of transformers (as defined in section II.A.2), some units would have similar methods of construction.

Building on this understanding, the Department drafted and proposed ''engineering design lines,'' grouping together certain kVA ratings within sub-divisions of the proposed product classes. These proposed engineering design lines published in the December 2001 draft report were in response to a request from ACEEE asking the Department to prepare and publish preliminary analyses as soon as possible to allow stakeholders to review and comment on the rulemaking process. (ACEEE, No. 14 at p. 3) Based on stakeholder feedback and the meetings held with the manufacturers in early 2002, the Department arrived at a final set of thirteen engineering design lines that group together kVA ratings within product classes, thereby covering all the kVA ratings shown in TP 1.

Table II.5 illustrates the relationship between the proposed product classes and the engineering design lines. Several of the product classes are sub-divided into two or more engineering design lines, enabling the Department to have more accurate results when studying the cost-efficiency relationship. None of the engineering design lines span across two product classes. However, three of the product classes (numbers 5, 7 and 9, all dry-type, medium-voltage, single-phase) have such low shipment volume that the Department decided to scale analysis results from the three-phase, medium-voltage, dry-type units to cover these product classes. This scaling operation involves simply dividing the analysis findings by three.

TABLE II.5.—MAPPING OF PROPOSED PRODUCT CLASSES TO ENGINEERING DESIGN LINES

Distribution transformer product class	kVA range	Engineering design lines
1. Liquid-immersed, medium-voltage, single-phase	10–833	DL 1: 10–100 kVA, Rectangular DL 2: 10–100 kVA, Round DL 3: 167–833 kVA
2. Liquid-immersed, medium-voltage, three-phase	15–2500	DL 4: 15–500 kVA DL 5: 750–2500 kVA
3. Dry-type, low-voltage, single-phase	15–333	DL 6: 15–333 kVA
4. Dry-type, low-voltage, three phase	15–1000	DL 7: 15–150 kVA DL 8: 225–1000 kVA
5. Dry-type, medium-voltage, single-phase, 20–45 kV BIL	15–833	(DL 9/3: 15–167 kVA)* (DL 10/3: 250–833 kVA)*
6. Dry-type, medium-voltage, three-phase, 20–45 kV BIL	15–2500	DL 9: 15–500 kVA DL 10: 750–2500 kVA
7. Dry-type, medium-voltage, single-phase, 46–95 kV BIL	15–833	(DL 11/3: 15–167 kVA)* (DL 12/3: 250–833 kVA)*
8. Dry-type, medium-voltage, three-phase, 46–95 kV BIL	15–2500	DL 11: 15–500 kVA DL 12: 750–2500 kVA
9. Dry-type, medium-voltage, single-phase, ≥96 kV BIL	75–833	(DL 13/3: 75–833 kVA)*
10. Dry-type, medium-voltage, three-phase, ≥96 kV BIL	225–2500	DL 13: 225–2500 kVA

*Due to the low shipment volume in these three product classes, the Department decided to scale the results of analysis on the three-phase medium-voltage (MV) dry-type distribution transformers to these single-phase units, by dividing the results of the three-phase analysis by three to adjust to single-phase.

From each of the thirteen engineering design lines, the Department selected one representative unit to study in detail in both the engineering and the LCC analysis. Once these two analyses were complete, the Department scaled the findings on these units to all the other kVA ratings within each of the thirteen design lines using the 0.75 scaling rule (see Chapter 5 in the TSD). This rule states that for similarly designed transformers, construction costs and watt losses scale to the ratio of kVA ratings raised to the 0.75 power. Square D informed DOE of this fact during a public hearing about the Department's test procedure rulemaking held on January 6, 1999. Square D stated that the material content, as well as the losses, scale to the three-quarter power of kVA. (Public Hearing Transcript, No. 47 at p. 158)

The selection of the thirteen representative units was based on inputs from multiple sources. For example, NEMA suggested that six kVA ratings should form the nucleus of the representative units for further analysis. (NEMA, No. 7 at p. 5) Of these, the Department selected four units for its engineering analysis: a liquid-filled, 50 kVA, single-phase, pad-mounted transformer was used for design line 1; a liquid-filled, 25 kVA, single-phase, pole-mounted transformer was used for design line 2; a dry-type, 75 kVA, low-voltage, three-phase transformer was used for design line 7; and a dry-type, 2000 kVA, medium-voltage, three-phase transformer was used for design line 13. The two other recommended ratings (500 kVA and 2000 kVA three-phase,

liquid-immersed transformers) did not fit well with the structure of the design lines. The Department did not select the liquid-filled, 500 kVA, three-phase, pad-mounted transformer because liquid-filled, three-phase units span two design lines, ranging from 15 to 500 kVA (design line 4), and from 750 to 2500 kVA (design line 5). To keep any scaling error to a minimum, the Department selected representative units from around the middle of the kVA ranges of each engineering design line. The Department's decision to split the three-phase, liquid-immersed units into two separate design lines came after input was received from manufacturers during the 2002 site visits and analysis by the Department's technical team. Thus, a 150 kVA, three-phase, liquid-immersed unit was selected for design line 4 instead of the NEMA-recommended 500 kVA unit. Similarly, a 1500 kVA, three-phase, liquid-immersed transformer was selected instead of the NEMA-recommended 2000 kVA transformer for design line 5.

For the dry-type distribution transformer design lines, the representative units were selected following meetings held with manufacturers in early 2002. Manufacturers recommended the ratings chosen because they were either the mid-point of a design line's kVA range (minimizing any scaling error introduced by the 0.75 scaling rule) or the selected rating represented a high volume kVA rating. Following the demarcation of the product classes (see Table II.3), dry-type distribution transformers constitute eight engineering design lines, grouped by kVA and BIL rating. As discussed in section II.A.2 on product classes, the Department learned that using different BIL ratings would be necessary to capture the important differences in the cost-efficiency relationships between units. If a single efficiency standard were set across all medium-voltage, dry-type BIL ratings, it would be a comparatively weak standard for lower BIL ratings and a difficult (if not impossible) standard for a higher BIL rating. NEMA recognized this problem in its TP 1–1996 document; when it published the revised TP 1 in 2002, it divided medium-voltage, dry-types into two groups: ≤60 kV BIL and >60 kV BIL. Based on comments the Department received during its manufacturer site visits in early 2002, the Department elected to use three BIL groups for the ANOPR: ≤45 kV BIL, 46–95 kV BIL and ≥96 kV BIL. This additional disaggregation enables the Department to propose more accurate efficiency standards for the appropriate BIL rating, thereby reducing the possibility of ineffectual standards on lower BIL ratings or excessive standards on higher BIL ratings. The Department invites comment from stakeholders on this decision to have more dry-type BIL categories than NEMA's TP 1–2002.

Manufacturers also informed the Department during their meetings that differences in BIL ratings are only important for medium-voltage, dry-type distribution transformers. Separate standards by BIL rating are not required for the liquid-immersed or the low-voltage, dry-type units.

Once DOE became aware of the importance of BIL ratings for medium-voltage, dry-type distribution transformers, it selected some representative units for design lines 9 through 13 with BIL ratings slightly higher than conventional levels for the specified primary voltages. The Department made these selections after discussions with several manufacturers, to ensure that efficiency standards would not excessively penalize customers purchasing transformers built with primaries operating at higher-than-normal BIL levels. For example, the representative unit from design line 9 is a 300 kVA, three-phase, dry-type transformer with a 4160 V primary voltage. This primary voltage would normally be built with a 30 kV BIL; however, for a particular application there could be exposure to higher than normal voltage surges resulting from switchgear, and transformer specifiers may choose to order this unit with a 45 kV or even a 60 kV BIL. If the Department established the minimum efficiency standard based on a 30 kV BIL, it could restrict the manufacturer's ability to manufacture a compliant 45 kV BIL or 60 kV BIL unit. To accommodate this concern of manufacturers, the Department selected slightly higher than normal BIL ratings for each of the representative units in design line 9 through 13 for the specified primary voltages.

Table II.6 presents the Department's thirteen engineering design lines and the representative units selected from each design line for analysis. Note that for the liquid-immersed, medium-voltage, single-phase distribution transformers, design line 1 represents rectangular tank units from 10 to 100 kVA while design line 2 covers the same kVA range, but represents cylindrical tank designs. The Department analyzed these two common methods of manufacturing this type of transformer to capture any economic variability that may result from different core/coil construction techniques or tank costs.

TABLE II.6.—ENGINEERING DESIGN LINES AND REPRESENTATIVE UNITS FOR ANALYSIS

DL	Type of distribution transformer	kVA range	Voltage taps	Secondary voltages	Engineering design line representative unit
1	Liquid-immersed, medium-voltage, single-phase, rectangular tank.	10–100	±2–2.5%	240/120 to 600V	50kVA, 65°C, single-phase, 60Hz, 7200V primary, 240/120V secondary, rectangular tank
2	Liquid-immersed, medium-voltage, single-phase, round tank.	10–100	±2–2.5%	120/240 to 600V	25kVA, 65°C, single-phase, 60Hz, 24940GrdY/14400V primary, 120/240V secondary, round tank
3	Liquid-immersed, medium-voltage, single-phase.	167–833	±2–2.5%	120/240 to 600 V	500kVA, 65°C, single-phase, 60Hz, 14400/24940YV primary, 277/480YV secondary
4	Liquid-immersed, medium-voltage, three-phase.	15–500	±2–2.5%	208Y/120 to 600V	150kVA, 65°C, three-phase, 60Hz, 12470Y/7200V primary, 208Y/120V secondary
5	Liquid-immersed, medium-voltage, three-phase.	750–2500	±2–2.5%	208Y/120 to 600Y/347V.	1500kVA, 65°C, three-phase, 60Hz, 24940GrdY/14400V primary, 480Y/277V secondary
6	Dry-type, low-voltage, single-phase	15-333	Universal*	120/240 to 600V	25kVA, 150°C, single-phase, 60Hz, 480V primary, 120/240V secondary, 10kV BIL

TABLE II.6.—ENGINEERING DESIGN LINES AND REPRESENTATIVE UNITS FOR ANALYSIS—Continued

DL	Type of distribution transformer	kVA range	Voltage taps	Secondary voltages	Engineering design line representative unit
7	Dry-type, low-voltage, three-phase	15-150	Universal*	208Y/120 to 600Y/347V.	75kVA, 150°C, three-phase, 60Hz, 480V primary, 208Y/120V secondary, 10kV BIL
8	Dry-type, low-voltage, three-phase	225-1000	Universal*	208Y/120 to 600Y/347V.	300kVA, 150°C, three-phase, 60Hz, 480V Delta primary, 208Y/120V secondary, 10kV BIL
9	Dry-type, medium-voltage, three-phase, 20–45kV BIL.	15-500	±2–2.5%	208Y/120 to 600Y/347V.	300kVA, 150°C, three-phase, 60Hz, 4160V primary, 480Y/277V secondary, 45kV BIL
10	Dry-type, medium-voltage, three-phase, 20–45kV BIL.	750–2500	±2–2.5%	208Y/120 to 600Y/347V.	1500kVA, 150°C, three-phase, 60Hz, 4160V primary, 480Y/277V secondary, 45kV BIL
11	Dry-type, medium-voltage, three-phase, 20–45kV BIL.	15–500	±2–2.5%	208Y/120 to 600Y/347V.	300kVA, 150°C, three-phase, 60Hz, 12470V primary, 480Y/277V secondary, 95kV BIL
12	Dry-type, medium-voltage, three-phase, 60–95kV BIL.	750–2500	±2–2.5%	208Y/120 to 600Y/347V.	1500kVA, 150°C, three-phase, 60Hz, 12470V primary, 480Y/277V secondary, 95kV BIL
13	Dry-type, medium-voltage, three-phase, 110–150kV BIL.	225–2500	±2–2.5%	208Y/120 to 600Y/347V.	2000kVA, 150°C, three-phase, 60Hz, 12470V primary, 480Y/277V secondary, 125kV BIL

*Universal Taps are 2 above and 4 below 2.5%.

3. Developing the Engineering Analysis Inputs

The Department conducted a modified design-option approach, where a third party creates a database of viable transformer designs and estimates their cost and performance characteristics. The Department selected the software design company OPS to prepare this database. OPS has been providing transformer design services for various manufacturers in the U.S. and abroad for more than 30 years.

The Department worked closely with the nine manufacturers it visited in early 2002 to develop and refine the software inputs for the representative units. The inputs required for the analysis included both design-related inputs (*e.g.*, types of core steel, windings, core configurations, insulation, and spacers) and the cost of these materials and labor. Using these inputs, OPS created a design database that spans the range of efficiency levels for each of the distribution transformers studied in the engineering analysis. This range of efficiency levels spans from the lowest first-cost units to the maximum, technologically feasible efficiency level.

Information concerning the design inputs for the representative units from each of the engineering design lines appears in Chapter 5 of the TSD. The information provided includes the minimum performance characteristics, the core-coil combinations, primary and secondary voltages, voltage taps, and other design details. Chapter 5 of the TSD also provides the material costs used for core steel, wire and strip windings, insulation, spacers, bushings, tanks, core clamps, hardware, and all the other components costed in the OPS generated transformer designs.

These material costs are critical inputs to the OPS design software. To be consistent with industry practice, OPS marks up the raw material prices entered into the software. In other words, the scrap factor, factory overhead, and non-production markup are incorporated into the cost of a pound of core steel as it is entered into the software design program. NEMA commented that it would be desirable to have manufacturers jointly agree on markup percentages to apply to the manufacturing data to arrive at a typical estimated manufacturer selling price. (NEMA, No. 7 at p. 6) In response to this recommendation, the Department calculated initial markup estimates based on U.S. Industry Census Data for 1992 and 1997 and Securities and Exchange Commission (SEC) 10–K reports for Acme Electric Corporation, Powell Industries, Magnetek, and Hammond Power Solutions. These initial markups were circulated in a draft engineering analysis report in December 2001 for comment.

AK Steel commented that initial scrap factor of 10 percent was too high for core steel and recommended that the Department use a 2 percent scrap factor. (AK Steel, No. 18 at p. 2) The Department discussed this comment with several manufacturers and with OPS, all of whom agreed that 10 percent was too high for core steel, but may be correct for insulation or wire. In recognition of the greater importance of core steel as a contributor to the manufacturer selling price of the transformer, the Department decided to use a scrap factor of 2.5 percent rather than 10 percent for all variable materials handled during manufacturing (*e.g.*, core steel, windings, insulation).

A stakeholder commented that the manufacturer's profit markup used in the December 2001 draft engineering analysis update report was too high, and the overhead markup was too low. (Klein, No. 17 at p. 2) The Department confirmed this comment during its interviews with manufacturers in early 2002. Based on input from the eight manufacturers visited, the Department revised its manufacturer raw-material markups as follows:

- Scrap factor: a 2.5 percent markup. This markup applies to variable materials (*e.g.*, core steel, windings, insulation). It accounts for the handling of material (loading into assembly or winding equipment) and the scrap material that cannot be used in the production of a finished transformer (*e.g.*, lengths of wire too short to wind, trimmed core steel).
- Factory overhead: a 12.5 percent markup, applied only to direct material costs, accounts for all the indirect costs associated with production, indirect materials and energy use, depreciation, taxes, and insurance.
- Non-production: a 25 percent markup applied to the sum of the direct material production, the direct labor, and the factory overhead. This markup reflects costs such as sales and general administrative, research and

development, interest payments, and profit factor.

Chapter 5 of the TSD also discusses the methodology followed to derive an industry average cost of labor. The Department calculated it initially from SEC 10–K reports, and solicited feedback from manufacturers during the early 2002 site visits. The Department started with a labor cost per hour of $14.31, and added a series of markups which brought the end-price of labor to $53.46 per hour. These markups include the burden of indirect production labor costs (33 percent), overhead (30 percent), fringe benefits (21 percent), assembly labor up-time (43 percent), and non-production markup (25 percent). The assembly labor up-time markup of 43 percent reflects a labor use rate of 70 percent, meaning that 30 percent of the time, production staff are not engaged in building transformers. All of these terms are defined in Chapter 5 of the TSD.

In combination with the cost of material and labor inputs, the OPS software used a range of what are known in the industry as A and B evaluation combinations (see TOC evaluation method in Chapter 3 of the TSD). These A and B evaluation values mimic hundreds of distribution transformer purchase orders. A represents a customer's net present value of future losses in the transformer core (no-load losses) and B represents a customer's net present value of future losses in the windings (load losses). These values take into account a range of factors depending on the customer. For utilities, some of the key variables include the avoided cost of generation, the avoided cost of transmission and distribution, the levelized fixed charge rate, and the equivalent annual peak load. For commercial and industrial customers, some of the key variables include the cost of capital, the energy demand costs, the peak load on the transformer, and the loss factor. The Department also used A and B values in the LCC analysis (see section II.F.2.c) to simulate customer purchasing behavior in the transformer market.

A and B are expressed in terms of dollars per watt of loss. The greater the values of A and B, the higher financial importance a customer attaches to the value of future transformer losses. As A and B values increase, the watts of core and winding losses decrease, and the resultant transformer efficiency increases.

For the engineering analysis, the Department used broad ranges of A and B evaluation values (presented in Chapter 5 of the TSD) capturing a comprehensive range of efficiency levels for each design option combination of core steel and winding material. During the 2002 site visits, manufacturers helped develop the range of values used. These values cover the spectrum of efficiencies represented in transformer orders from customers, as well as a low first-cost design and a maximum technologically feasible design. For the low first-cost design, the A and B evaluation values are both $0/watt, indicating that the customer does not attach any financial value to future losses in the core or coil of the transformer being bought. For the maximum technologically feasible design, the A and B evaluation values are higher, and were differentiated for this analysis between the liquid-immersed and dry-type distribution transformers.

In its December 2001 draft engineering analysis report, the Department had used A values for the liquid-immersed design lines that increased in increments of 0.25 and B values that increased by 0.10. However, using such fine increments of A and B value combinations resulted in more than 1,000 designs per design option combination, and more than 10,000 designs per representative unit. According to the manufacturers, these fine increments of A and B constituted an unnecessary level of detail for understanding the broader relationship between cost and efficiency. The revised analysis, published in June 2002, used the same range of A and B values, but with larger increments (0.50 on A and 0.25 on B). To identify the maximum technical efficiency potential for selected design option combinations, the Department applied an ''extended analysis'' of A and B values, thereby extending A values up to $16 and B values up to $6.

During the manufacturer site visits in early 2002, dry-type manufacturers requested that the Department use a different range of A and B values than those used for the liquid-immersed analysis. These manufacturers recommended considering a broader range of A and B value combinations, as well as higher B values. For the dry-type transformer analysis, the Department increased A and B values incrementally from lowest first-cost to $12/watt for A and to $8/watt for B. More information on the range of A and B values and the increments used to generate the engineering analysis design database is presented in Chapter 5 of the TSD.

4. Energy Efficient Design Issues

Several stakeholders commented that the Department should be aware that the performance characteristics and physical size of a distribution transformer changes as the efficiency improves. EEI commented that the two most important changes are an increase in available fault current and an increase in the physical dimensions of an equivalent kVA unit. (EEI, No. 6 at p. 3) This point was also made by TXU Electric and Gas. (TXU Electric and Gas, No. 12 at p. 7) These stakeholders expressed concern that when replacing a transformer with a new, more efficient unit, the customer's main electrical disconnect may not be rated for the increased fault current. Should this occur, it might cause the customer to replace equipment such as the electrical panel in addition to the transformer to maintain compliance with the National Electrical Safety Code. However, EEI cautioned that some companies may not choose to replace the electrical panel, thereby creating a safety hazard. (EEI, No. 6 at p. 4) Southern Company also highlighted the issue that a lower impedance on a more efficient transformer would increase available fault current. Utilities set minimum impedance levels to limit the available fault current at the transformer. (Southern Company, No. 8 at p. 6)

In order to address these concerns, the Department held the impedance of the designs created by the OPS software to an appropriate minimum value during the design phase (*e.g.*, 1.5 percent for a liquid-filled, 50 kVA, single-phase transformer) to ensure that the impedance does not become so low in highly efficient designs that it would result in dangerously high fault currents in the customer's breaker.

Stakeholders also commented that if the physical dimensions of a transformer increase under the standard, this increase could cause clearance and safety problems, according to the National Electric Safety Code. Whether the transformer is on a pole or a pad, the utility and/or the customer may incur additional installation costs, beyond the transformer installation costs. EEI noted that this criticism would not apply to new installations. (EEI, No. 6 at p. 4) To accommodate this comment in the analysis, the Department tracked the dimensions of all the designs created by the OPS software. For the larger, three-phase, dry-type units, the height of the cabinet was held at a common, standard industry dimension, while the length and width varied with the core/coil dimension. The LCC analysis also used this weight and dimensional data, as it directly impacts the shipping and installation costs.

Southern Company noted that more efficient transformers are typically larger and heavier. These units would

have higher transportation costs and may require stronger poles. (Southern Company, No. 8 at p. 3) The OPS software calculates the weight of each of the transformers designed, and any additional handling and installation costs are included in the LCC analysis.

5. Engineering Analysis Results

The results of the engineering analysis are presented in Chapter 5 of the TSD and in two Microsoft Excel spreadsheets on the Department's website. All the designs created for each of the representative units from the thirteen design lines are presented. Hundreds of design variations are developed for each representative unit, spanning the broad range of efficiency levels and costs.

The OPS software produces design specification reports that include information about the core and coil assembly. The design report includes details about the core, high and low voltage windings, insulation, cooling ducts, and labor costs, that would enable a manufacturer to build a transformer at a given rating. The software also generates an electrical analysis report that estimates the performance of that design, including efficiency, core and coil losses at 25 percent, 35 percent, 50 percent, 65 percent, 75 percent, 100 percent, 125 percent, and 150 percent of nameplate load. When the database of OPS software designs is assembled, the output provides a clear understanding of the relationship between cost and efficiency because it incorporates data on the design, the bill of materials, the labor costs, and the efficiency.

The OPS manufacturing cost estimates assume an ideal situation where manufacturers do not incur retooling or special handling costs associated with changing materials or core/coil dimensions. NEMA stated its concern that the draft engineering analyses reports presented in December 2001 and August 2002 did not capture one-time costs and investments that will be required to design and manufacture design types that are outside the range of materials, technologies, and production methods currently used by manufacturers. NEMA believes that standard levels requiring materials and technologies beyond the existing range used by companies today will incur significant one-time costs. The ''Selling Price'' estimates provided in the analysis must incorporate timely recovery of these one-time costs by the manufacturers. (NEMA, No. 19 at p. 2)

The Department appreciates this comment because it highlights the importance of correctly reflecting the impact a regulation will have on the manufacturers of transformers. The recovery of one-time retooling costs is part of the manufacturer impact analysis (MIA), which will be conducted following the ANOPR workshop. The Department requests that reviewers, and particularly manufacturers, comment on the significant additional one-time costs they would incur if efficiency standards were introduced.

D. Energy Use and End-Use Load Characterization

This section presents the Department's estimation of the energy use and end-use load characterization for distribution transformers. Transformer loading is a factor that is important for determining which types of transformer designs will deliver a specified efficiency, and for calculating transformer losses. Transformer losses have two components: no-load losses and load losses. No-load losses are independent of the load on the transformer, while load losses depend approximately on the square of the transformer loading. Because load losses can increase dramatically with increased loading, there is a particular concern that during times of peak system load, load losses can impact system capacity costs and reliability. The Department received extensive comments on transformer loading due to its substantial implications for both transformer design and loss calculations.

NEMA recommended that the primary economic analyses on which a standard is based should be done using the TP 1 load levels of 35 percent and 50 percent, and that it may also be appropriate to calculate national energy savings based on a lower loading. (NEMA, No. 7 at p. 9) ACEEE commented that commercial building distribution transformers have been shown to have low capacity factors (typically around 20 percent), that 16 percent is an appropriate value for low-voltage dry-type transformers, and that the 20–30 percent value for utility distribution company (UDC) transformers seemed reasonable. (ACEEE, No. 21 at p. 1; ACEEE, No. 14 at p. 2) In contrast, TXU Electric and Gas noted that it is not unusual to allow peak load levels on a transformer serving residential customers to go as high as 130 percent of nameplate load during the summer or 160 percent during the winter and suggested that in a UDC environment the loading level number may be somewhere higher than the NEMA recommended 50 percent. (TXU Electric and Gas, No. 12 at p. 6) Copper Development Association (CDA) commented that several transformer manufacturers recommend loading their product to at least 60–70 percent of the nameplate rating, and that higher loading levels are recommended in applications where there is no need for overload capacity. (CDA, No. 9 at p. 2) Southern Company noted that most large utilities have a wealth of information concerning transformer loading and loading practices, and that the Department should be able to gather needed information from utilities to evaluate current data on loading and typical average and peak loads on distribution transformers. (Southern Company, No. 8 at p. 4)

The Department developed detailed models of the transformer loads and based features of its models on hourly data obtained from utility and public sources (see Chapter 6 of the TSD). The analysis resulted in average initial load levels for liquid-immersed transformers ranging from 30 percent for 25 kVA transformers to 59 percent for 1500 kVA transformers and average life-time load levels of 35 percent and 70 percent, respectively. The shipment-weighted lifetime average loading is 52.9 percent. These load levels are within the range suggested in the aforementioned comments submitted by NEMA and TXU Electric and Gas.

For dry-type transformers, the Department's analysis resulted in average load levels ranging from 32 percent to 37 percent (depending on transformer size), which are consistent with some initial comments by NEMA but are higher than load levels recommended by many of the comments on the actual loading of dry-type transformers. Shipment-weighted lifetime average loading is 33.6 percent for low-voltage dry-type and 36.5 percent for medium-voltage dry-type. The Department's estimate for low-voltage dry-type transformers is quite close to the NEMA recommendation, but the estimate for medium-voltage dry-type transformers is substantially lower than the 50 percent loading recommended by NEMA for economic evaluation. This is because the estimate of 75 percent initial peak load and the load factors estimated from the hourly building load data are consistent with the lower average loading. The Department estimated that the initial peak loading of dry-type transformers should be 75 percent if transformers are sized primarily by using engineering criteria. NEMA later commented that the actual initial load is less than 50 percent for dry-type transformers in commercial buildings. (NEMA, No. 26 at p. 3) Currently, the Department examines the low initial load case as a sensitivity case for low-voltage dry-type transformers. For this sensitivity case,

average loadings are about 20 percent. The Department invites additional comment and data regarding the loadings of both low-voltage and medium-voltage, dry-type transformers and specific comments on whether the current 75 percent average initial peak loading used by the Department should be lowered to 50 percent as recommended by NEMA's more recent comment. Comments may also address the possibility of using 50 percent average initial peak loads for commercial applications and 75 percent initial peak loads (or higher) for industrial applications, or different initial peak loadings for low-voltage and medium-voltage, dry-type transformers.

The Department also received substantial comment on specific technical details of transformer loading. There is a degree of coincidence between transformer loads and either system or building loads during the time of peak load. Load coincidence is measured by a peak responsibility factor (PRF), defined as the square of the ratio of the transformer load during the time of the annual system or building peak, and the annual peak load of the transformer. The Department's analysis estimated peak coincidence factors from available hourly building load data obtained from a Bonneville Power Administration study and provided by an electric utility stakeholder, as described in detail in Chapter 6 of the TSD.

On peak load coincidence, EEI commented that transformer load profiles often do not correlate to the facility load profiles. (EEI, No. 28 at p. 2) Also, a stakeholder was concerned that the Department may use standardized loading assumptions, and that there is no mention of diversity, or the low likelihood that the peak load on the transformer will coincide with the utility peak, such as in a church. (L.G. Spielvogel, Inc., No. 39 at p. 1) In contrast, CDA commented that for the commercial and industrial sector, transformer peak times are expected to roughly correspond with system peak times. (CDA, No. 43 at p. 2)

The Department's analysis of peak load coincidence is consistent with these comments because the analysis incorporates the range and diversity of conditions described by the stakeholders. Residential and certain commercial loads were found to have low coincidence with system peak load, while industrial and certain commercial loads have a high degree of coincidence. The average PRF ranges from 31 percent for 25 kVA, pole-mounted, liquid-immersed transformers (which serve a large proportion of residential and small commercial loads) to 68 percent for 1500 kVA, liquid-immersed, pad-mounted transformers. For dry-type transformers, the PRF average values range from 47 percent to 54 percent, depending on the transformer owners assumed for a given design line. The data available to the Department does not provide information that allows a detailed analysis of dry-type transformer peak coincidence factors with commercial and industrial whole-building loads. As highlighted in section IV.E, the Department requests additional specific commentary and load data regarding transformer applications for commercial and industrial users.

E. Markups for Equipment Price Determination

This section explains how the Department developed markups to the equipment prices to derive installed transformer prices (see TSD Chapter 7). Supply-chain markup and installation costs are the costs associated with bringing a manufactured transformer into service as an installed piece of electrical equipment. NEMA pointed out that determining user costs for dry-type transformers is difficult because transformers pass through a wide range of channels before reaching the ultimate owner. (NEMA, No. 7 at p. 6)

In the LCC analysis (see section II.F), the Department applied the following price markups to the manufacturing costs of dry-type transformers: distributor markup, contractor materials markup, installation labor and equipment markup and sales tax. The Department did not apply the distributor and contractor materials markups to liquid-immersed transformers but did apply the markup on installation labor and equipment, since utilities generally purchase their transformers directly from manufacturers and install the transformers themselves. The Department did not have sufficient data to diversify the distribution channels and markups beyond these two cases. The Department requests feedback from stakeholders on which distribution channels are most common for the different types of distribution transformers.

The Department estimated these markups for dry-type transformers (expressed as average multipliers) from RS Means Electrical Cost Data 2002. The Department used RS Means data because it is widely used in the industry. Table II.7 lists the average markups used in this ANOPR; additional detail is provided in Chapter 7 of the TSD.

TABLE II.7.—SUPPLY-CHAIN MARKUPS

LCC analysis markups	Average multiplier
Distributor	1.350
Contractor Materials	1.100
Installation Labor and Equipment	1.520
Sales Tax	1.054

For dry-type transformers, the distributor applies a markup to the manufacturer selling price to arrive at a distributor price, which is the price paid by the electrical contractor. This distributor markup reflects the cost of distribution, including sales labor, warehousing, overhead, and profit for the distributor. The contractor markup applied to the distributor price covers contractor overhead and profit for the sale of the transformer. Installation labor and equipment markup accounts for the overhead costs of labor and the wear and tear of equipment used during the installation process. In calculating total installation costs, the Department used the weight of each specific design as one of the input variables to determine installation cost. Shipping costs are also added. The Department estimated average shipping costs based on the transformer weight using an average unit shipping cost of $0.20/lb. Finally, the Department added a sales tax to the total cost, resulting in the total installed cost. For liquid-immersed distribution transformers, the total installed cost includes the manufacturer selling price, plus the weight specific installation labor and equipment costs, installation labor and equipment markup, shipping cost, and sales tax.

Southern Company noted in its comments that heavier, pole-mounted transformers might also require stronger, more expensive utility poles. (Southern Company, No. 8 at p. 3) The Department did not explicitly model this potential effect due to a lack of data on the relationship between the extra weight that more efficient models might have and the ability of standard utility poles to support transformers with that extra weight, the added costs of such poles if they were required, and the fraction of transformers that might be subject to this effect. The Department requests such data from utilities or other stakeholders who might have it. As highlighted in section IV.E, the Department requests feedback from stakeholders on markup costs to refine supply-chain markup cost estimates.

F. Life-Cycle Cost and Payback Period Analyses

When DOE is determining whether an energy efficiency standard for

distribution transformers is economically justified, it takes into consideration the economic impact of potential standards on consumers (42 U.S.C. 6317(c) and 42 U.S.C. 6295(o)(2)(B)). To accomplish this, the Department calculated changes to consumers' LCCs which are likely to result from a candidate standard level, as well as producing a distribution of PBPs (see TSD Chapter 8). The effects of standards on individual consumers include changes in operating expenses (usually lower) and changes in total installed cost (usually higher). The Department analyzed the net effect of these changes by calculating the changes in LCCs compared to a base case. The LCC calculation considers total installed cost (equipment purchase price plus installation cost), operating expenses (energy and maintenance costs), equipment lifetime, and discount rate. The Department performed the LCC analysis from the perspective of the user of the distribution transformer equipment. The PBP is an estimate of the time required to recover the incremental cost increase of a more efficient transformer from the operating cost savings.

The LCC and PBP results are presented to facilitate stakeholder review of the LCC analysis. Similar to the LCC analysis, the PBP is based on the total cost and operating expenses. But unlike the LCC analysis, only the first year's operating expenses are considered in the calculation of PBP. Because the PBP analysis does not take into account changes in operating expense over time or the time value of money, it is also referred to as a ''simple'' payback period.

On the broad issue of calculating LCC savings, TXU Electric and Gas noted that the input parameters necessary to calculate that savings are volatile. Variances in load characteristics such as peak demand and load factor and variation in energy costs which range from 3 to 15 cents per kWh make calculation of any energy savings uncertain. (TXU Electric and Gas, No. 12 at p. 9)

The Department generated LCC and PBP results as probability distributions using a simulation based on Monte Carlo statistical analysis methods in which inputs to the analysis spreadsheets consist of probability distributions rather than single-point values. As a result, the Monte Carlo analysis produces a range of LCC and PBP results. A distinct advantage of this type of approach is that the Department can estimate the percentage of users that achieve particular LCC savings or attain certain PBP values due to an efficiency standard, in addition to the average LCC savings or average PBP for that standard. Because DOE conducted the analysis in this way, it can express the uncertainties associated with the various input variables as probability distributions. During the post-ANOPR LCC sub-group analysis, the Department intends to evaluate additional parameters and prepare a comprehensive assessment of the impacts on sub-groups of users.

The Department developed spreadsheet models in Microsoft Excel to calculate the LCC and PBP. An add-in to Microsoft Excel called Crystal Ball (a commercially available software program by Decisioneering) allows for input variables to be characterized with probability distributions. The spreadsheet models are available for download from the Department's website.

The Department performed a sensitivity analysis of LCC model inputs to examine which inputs have the greatest affect on LCC results. See the LCC Inputs, section II.F.2.

1. Approach Taken in the Life-Cycle Cost Analysis

The LCC analysis estimates the impact on consumers of potential energy efficiency standards by calculating the net cost of a transformer under a base case of no standard and a standards case of only standard-compliant transformers being available in the market. The first step in calculating the net cost of a transformer is specifying the distribution of possible transformer designs and the attendant equipment and installation costs associated with each design. The engineering analysis provides the manufacturer costs for each transformer design. As explained in section II.E, the Department estimates the final installed cost by multiplying the manufacturer's selling price by the appropriate markups, then adding sales tax, shipping costs, and installation costs.

Next, the calculation includes a purchase-decision model that determines which of the many designs a customer selects. A fundamental input to the purchase-decision model is the proportion of transformers bought using an evaluation of the economic impact of losses. Section II.F.2.c on baseline and standard design selection discusses this fundamental input in more detail. Once the base case and standards case designs are selected for a customer, the Department estimates the customer load characteristics, which determine the transformer no-load and load losses.

The Department created two sets of electricity prices to estimate annual energy expenses: a tariff-based estimate and an hourly-based estimate. The Department applied the tariff-based approach to dry-type transformers, owned primarily by commercial and industrial customers. The Department applied the hourly-based approach to liquid-immersed transformers, used primarily in utility applications. The tariff-based approach estimates an annual energy expense using retail electricity prices determined from electric utility tariffs collected in 2002. The hourly-based approach estimates annual energy expense using marginal utility wholesale electricity costs from 1999, the most recent available data from the Federal Energy Regulatory Commission (FERC) when the analysis was performed. For the NOPR analysis, the Department will use the most current data available. For the hourly-based estimate, the Department collected electricity production prices that vary on an hourly basis and then used them to model the marginal electricity costs incurred by utilities from hourly losses. For electricity markets in which there is some level of competition, the Department collected actual wholesale hourly electricity prices. For markets that are still fully price-regulated, the Department collected hourly system-load and generation-cost data.

The Department then estimated the final LCC value for each design and each customer using a real discount rate that represents the average cost of capital for that customer. After repeating the calculation for many customers and many designs, the Department calculated the distribution of net LCC impacts of each candidate standard level.

2. Life-Cycle Cost Inputs

For each efficiency level analyzed, the LCC analysis requires input data for the total installed cost of the equipment, the operating cost, and the discount rate. Table II.8 summarizes the inputs and key assumptions used to calculate the customer economic impacts of various energy efficiency levels. Equipment price, installation cost, and baseline and standard design selection affect the installed cost of the equipment. Transformer loading, load growth, power factor, annual energy use and demand, electricity costs, electricity price trend, and maintenance costs affect the operating cost. Discount rate and lifetime of equipment affect the calculation of the present value of annual operating cost savings from a proposed standard.

TABLE II.8.—SUMMARY OF INPUTS AND KEY ASSUMPTIONS USED IN THE LCC ANALYSIS

Input	Description
Transformer loading	Loading depends on customer and transformer characteristics. The average initial liquid-immersed transformer loading is 30% for 25 kVA and 59% for 1500 kVA transformers. The average initial dry-type transformer loading is 32% for 25 kVA and 37% for 2000 kVA transformers. The shipment-weighted lifetime average loading is 33.6% for low-voltage dry and 36.5% for medium-voltage dry. With load growth, average installed liquid-immersed transformer loading is 35% for 25 kVA and 70% for 1500 kVA transformers with a shipment-weighted lifetime average loading of 52.9%. See section II.D.
Annual energy and demand	Derived from a statistical hourly load simulation for use liquid-immersed transformers, and estimated from the 1995 Commercial Building Energy Consumption Survey data for dry-type transformers using factors derived from hourly load data. Load losses vary as the square of the load and are equal to rated load losses at 100% loading. See section II.D.
Equipment price	Derived by multiplying manufacturer selling price (from the engineering analysis) by distributor markup and contractor markup plus sales tax for dry-type transformers. For liquid-immersed transformers, manufacturer selling price plus sales tax is used. Shipping costs are included for both types of transformers. See section II.E.
Installation cost	Includes a weight-specific component, derived from RS Means Electrical Cost Data 2002 and a markup to cover installation labor, and equipment wear and tear. See section II.E.
Effective Date of Standard	Assumed to be 2007 for this analysis.
Candidate Standard Levels	Five efficiency levels for each design line with the minimum equal to TP 1 and the maximum from the most efficient designs from the engineering analysis.
Baseline and standard design selection.	The selection of baseline and standard-compliant transformers depends on customer behavior. For liquid-immersed transformers, the fraction of purchases evaluated is 50%, while for dry-type transformers, the fraction of evaluated purchases is 10%. The average A value for evaluators is $5/watt, while the B value depends on expected transformer load.*
Power Factor	Assumed to be unity.
Load growth	One percent per year for liquid-immersed and 0% per year for dry-type transformers.
Electricity costs	Derived from tariff-based and hourly-based electricity prices. Capacity costs provide extra value for reducing losses at peak. Average marginal tariff-based retail electricity price: 6.4¢/kWh for no-load losses and 7.4¢/kWh for load losses. Average marginal wholesale utility hourly-based costs: 3.8¢/kWh for no-load losses and 4.5¢/kWh for load losses.
Electricity price trend	Obtained from Annual Energy Outlook 2003 (*AEO 2003*). Average real price change from 2001 to 2020 is −9%, −6%, −12%, and 0% for the reference, high growth, low growth, and constant real price scenarios, respectively.
Lifetime	Distribution of lifetimes, with mean lifetime for both liquid and dry-type transformers assumed to be 32 years.
Maintenance cost	Annual maintenance cost does not vary as a function of efficiency.
Discount rates	Mean real discount rates range from 4.2% for owners of pole-mounted, liquid-immersed transformers to 6.6% for dry-type transformer owners.

*The concept of using A and B evaluation combinations was introduced in section II.C.3, Developing the Engineering Analysis Inputs. Within the context of the LCC analysis, the A factor measures the value to a transformer purchaser, in $/watt, of reducing no-load losses while the B factor measures the value, in $/watt, of reducing load losses. The purchase decision model developed by the Department mimics the likely choices that consumers make given the A and B values they assign to the transformer losses.

The Department performed a sensitivity analysis of LCC model inputs to examine which ones have the greatest impact on LCC results. The LCC results are most sensitive to three parameters in the purchase decision model: fraction of purchases evaluated, cost of electricity, and loading estimates. The single most sensitive input is the fraction of purchases in which transformer losses are evaluated during a purchase. The input with the next most significant impact is the cost of electricity. Electricity price trends have an indirect effect on the average cost of electricity over time while the initial estimate of electricity costs has a relatively larger impact on LCC results. The third most significant impact on LCC results derives from the loading estimates. Loading estimates are affected mostly by transformer sizing practices and secondarily by technical details of the load characteristics.

The power factor estimate affects the LCC results through its effect on load loss estimates. Depending on the customer profile for a given LCC analysis, discount rates can also have a large impact on LCC results. Other inputs such as lifetime, maintenance costs, and installation costs have a relatively small impact on LCC results when compared to inputs such as those mentioned above.

As noted by its absence in Table II.8, the Department chose not to include the impact of income taxes in the LCC analysis for this ANOPR. The Department understands that there are two ways in which taxes affect the net impacts of purchasing more energy efficient equipment compared to baseline equipment: (1) Energy efficient equipment typically costs more to purchase than baseline equipment which in turn lowers net income and may lower company taxes; and (2) efficient equipment typically costs less to operate than baseline equipment which in turn increases net income and may increase company taxes. In general, the Department believes that the net impact of taxes on the LCC analysis depends upon firm profitability and ''expense'' practices (how firms expense the purchase cost of equipment). The Department seeks input on whether income tax effects are significant enough to warrant inclusion in the LCC analysis for the NOPR. The Department specifically requests information on how many utilities and commercial and industrial firms that purchase distribution transformers have net Federal and/or state income tax liability and, if they do, what ''expense'' practices they use to depreciate the purchase costs.

a. Effective Date of Standard

The Department is planning to propose that the effective date of any new energy efficiency standard for

distribution transformers be three years after the final rule is published. The Department has been conducting analysis supporting this ANOPR since the framework document workshop in 2000. Early on, the Department assumed that the final rule would be issued in 2004 and that the new standard would take effect in 2007 and used these dates in the LCC and national impacts analyses. The Department recognizes that these dates are now unlikely to be achieved. Adjusting the effective date by a year or two will have relatively small impacts on the analysis LCC and national impacts results presented in this ANOPR. For the NOPR analysis, the Department will adjust these dates to accurately reflect the probable rule schedule at that time. The Department calculated the LCC for customers as if each new distribution transformer purchase occurs in the year the standard takes effect. The Department based the cost of the equipment on that year.

b. Candidate Standard Levels

The Department must first select efficiency levels to examine before it can conduct an analysis of the impact of candidate standard levels (CSL). NEMA suggested four efficiency levels: (1) A low-cost baseline design (lowest installed cost that meets all safety and performance requirements); (2) TP 1 level; (3) the maximum efficiency design (the highest efficiency products capable of being manufactured, irrespective of cost), or an alternative that is a fixed percentage improvement of the difference between TP 1 and 100 percent efficiency—in this case, about a 25–30 percent improvement over TP 1; and (4) an efficiency level halfway between TP 1 and maximum efficiency. (NEMA, No. 7 at pp. 7–8)

The American Council for an Energy Efficient Economy (ACEEE) recommended analysis of five efficiency levels: (1) The Department's proposed baseline (the least efficient transformer available on the market); (2) NEMA TP 1; (3) an efficiency level based on an approximately 7-year simple payback; (4) an efficiency level based on an approximately 12-year simple payback (which approximates the minimum life-cycle cost point for a 30-year product life with a 7-percent real discount rate); and (5) the maximum technologically feasible efficiency level. (ACEEE, No. 14 at p. 2)

Since the LCC analysis produces payback as an output, PBPs could not be used directly as an input for a particular candidate standard level. The Department's LCC model is flexible, and adjusting inputs and assumptions will produce different LCC outputs, including PBPs. Stakeholders are invited to use the spreadsheet models (posted on DOE's website) to explore how changing the inputs results in different payback outputs. The PBP results produced as part of the ANOPR include values similar to those requested by stakeholders but the Department did not conduct an explicit analysis exploring sets of inputs that produced specific PBP outputs.

The Department started with these NEMA and ACEEE comments and then examined distribution transformer cost/efficiency relationships from the engineering analysis and found that TP 1 efficiency levels could be obtained with relatively small cost increases over the lowest cost designs for all design lines. Therefore, the Department decided that evaluating a CSL between the lowest cost designs and the TP 1 efficiency level was not warranted, resulting in TP 1 as the minimum CSL. For each design line, the Department set the maximum CSL among the most efficient transformers in that engineering design line. The Department created three other CSLs between the minimum and maximum efficiency levels, approximately equally proportioned so as to capture cost and benefit impacts at a total of five roughly equally spaced standard levels, unique to each design line. The Department believes that analyzing this distribution of five CSLs for each of the 13 engineering design lines will provide sufficient information for considering a broad and meaningful range of efficiency ratings. The lowest candidate standard level is NEMA's TP 1, and the highest has losses that are 10 percent greater than the most efficient design identified in the engineering analysis. Table II.9 lists the candidate standard levels, expressed in terms of efficiency, and in terms relative to NEMA TP 1 efficiency levels.

TABLE II.9.—CANDIDATE STANDARD LEVELS EVALUATED FOR EACH DESIGN LINE

Design line	CSL 1		CSL 2		CSL 3		CSL 4		CSL 5	
	TP 1+ (%)	Efficiency (%)	TP 1+ (%)	Efficiency (%)	TP 1+ (%)	Efficiency (%)	TP 1+ (%)	Efficiency (%)	TP 1+ (%)	Efficiency (%)
DL 1	0.00	98.90	0.20	99.10	0.40	99.30	0.50	99.40	0.68	99.58
DL 2	0.00	98.70	0.20	98.90	0.40	99.10	0.60	99.30	0.77	99.47
DL 3	0.00	99.30	0.10	99.40	0.30	99.60	0.40	99.70	0.45	99.75
DL 4	0.00	98.90	0.20	99.10	0.40	99.30	0.50	99.40	0.66	99.56
DL 5	0.00	99.30	0.10	99.40	0.20	99.50	0.30	99.60	0.36	99.66
DL 6	0.00	98.00	0.20	98.20	0.40	98.40	0.70	98.70	0.79	98.79
DL 7	0.00	98.00	0.30	98.30	0.60	98.60	0.90	98.90	1.09	99.09
DL 8	0.00	98.60	0.20	98.80	0.40	99.00	0.60	99.20	0.67	99.27
DL 9	0.00	98.60	0.20	98.80	0.40	99.00	0.60	99.20	0.71	99.31
DL 10	0.00	99.10	0.10	99.20	0.20	99.30	0.30	99.40	0.34	99.44
DL 11	0.00	98.50	0.20	98.70	0.40	98.90	0.50	99.00	0.60	99.10
DL 12	0.00	99.00	0.10	99.10	0.30	99.30	0.40	99.40	0.45	99.45
DL 13	0.00	99.00	0.10	99.10	0.30	99.30	0.40	99.40	0.45	99.45

c. Baseline and Standard Design Selection

A key factor in estimating the economic impact of a proposed standard is the selection of transformer designs in the base case and standards case scenarios. The key issue is the degree to which transformer purchasers will buy transformers that have a minimum LCC for their application without the promulgation of a standard, compared to purchasing behavior with an efficiency standard in place.

The Department received many comments on design selection and purchase behavior and developed a purchase decision model that tries to incorporate many of the stated concerns. The engineering analysis provides cost and efficiency characteristics for

between 150 and 300 designs for each design option combination in each of the 13 engineering design lines. The purchase decision model in the LCC analysis selects which of the hundreds of designs are likely to be selected by transformer purchasers.

Southern Company commented that 54 percent of the distribution transformer line items that it buys and 75 percent by volume of the 300 line items bought currently meet the TP 1 efficiency standard. It concluded that the ''assumption that the baseline model would be the 'typically sold, low efficiency' model in the marketplace'' may not be a valid assumption. (Southern Company, No. 8 at p. 2) NEMA had commented earlier in the rulemaking that the baseline models used for the representative ratings analyses should be the transformers currently being sold when the life-cycle cost or total owning cost is not considered by the purchaser. (NEMA, No. 7 at p. 6) NRDC and EEI argued that because of electricity restructuring, utilities are moving away from TOC evaluation of transformer purchases. (NRDC, No. 5 at p. 3; EEI, No. 24 at p. 2) EEI noted that for UDCs, competitive retail markets are eliminating their ability to gain any economic return for installing high-efficiency transformers. (EEI, No. 24 at p. 3) Under such conditions, utility companies would tend to buy those transformers that have the lowest installed cost. HVOLT agreed for slightly different reasons, noting that because of the generation glut that occurred in 2001–2002, the 2003 A and B values have dropped to $0/watt in many parts of the country (see section II.C.3). (HVOLT, No. 42 at p. 1)

On the other hand, METGLAS Solutions disagreed that an overwhelming fraction of purchasers give little or no weight to losses in their evaluations. It argued that it is not true that only a small segment of the country has large A and B factors, especially when one takes a global perspective. For example, in Japan the A factor is close to $10 and in many European countries it is close to $8. (METGLAS Solutions, No. 16 at p. 2) And in a later comment, NEMA provided some quantitative detail on the fraction of higher efficiency transformers currently bought by noting that the market share of liquid-filled transformers satisfying TP 1 has gone from nearly 100 percent a few years ago to about 50 percent today. (NEMA, No. 26 at p. 4)

The Department, in its purchase-decision model for liquid-immersed transformers, assumed that 50 percent of transformer purchases are based on an evaluation process using A and B values. These A and B values are characterized as distributions with a mean of $5/watt for the A factor. A majority of purchases either have low A factors or are not evaluated, yet a large fraction (approximately 25 percent) have A factors larger than $5/watt. The Department does not currently model trends in the number of evaluators, but instead estimates that transformer evaluation behavior will be the same in the future as it is currently. The details of the transformer design selection are provided in the TSD, Chapter 8. As highlighted later in section IV.E, the Department requests input from interested parties on the purchase-decision model and transformer-evaluation-behavior for liquid-immersed transformers. Additional information on the fraction of evaluated purchases for different categories of transformers, specific trends or forecasts of evaluation behavior, and the average A factor values for such evaluations will be particularly valuable for the LCC analysis.

Evaluation is less common for dry-type transformers than it is for liquid-immersed transformers. EEI recommended that for dry-type transformers, DOE use the non-evaluation scenario (0 percent conducting evaluation). (EEI, No. 28 at p. 2) HVOLT agreed that many commercial and industrial customers make purchases, based on lowest first cost, but it found a significant percentage that will support a 3–5 year payback and would go as high as $1.50/watt for no-load losses (A) and as high as $0.35/watt for load losses (B). (HVOLT, No. 42 at p. 1) NEMA commented that for low-voltage, dry-type transformers, the market is commercial buildings. Commercial building owners are interested in the lowest first cost and typically their tenants pay the electric bills, leading to a low use of high efficiency transformers results, while about 25 percent of medium-voltage, dry-type transformers meet the TP 1 standard. (NEMA, No. 26 at pp. 2–3)

The Department, in its purchase-decision model for dry-type transformers, assumed that 10 percent of transformer purchases are based on an evaluation process using A and B values. To give an example of how this drives purchasing behavior, the Department's current customer-design-selection model estimates that the average baseline efficiency for 75 kVA, low-voltage, three-phase, dry-type transformers on the market is 96.4 percent at 35 percent loading compared to the TP 1 standard level of 98.0 percent. As highlighted in section IV.E, the Department requests input from interested parties on the customer-design-selection model and transformer-evaluation-behavior for dry-type transformers. Specific issues include the actual efficiency of the low first-cost designs currently on the market. The efficiency of the low first-cost designs has a large impact on overall energy savings estimates. Additional issues include whether the fraction of evaluators for low-voltage, dry-type transformers should be lowered to 0 percent as recommended by EEI, and raised to 25 percent for medium-voltage, dry-type transformers as implied by NEMA's comment. The average A-factor value is also a significant issue, and additional comments are invited on whether the Department should use an A-factor different from the current assumptions.

d. Power Factor

The power factor is the real power divided by the apparent power. Real power is the time average of the instantaneous product of voltage and current. Apparent power is the product of the root mean square voltage and the root mean square current. When specifying transformer efficiency, specifications such as NEMA's TP 1–2002 assume a power factor of 1.0. Thus, in the absence of any specific data or guidance on the appropriate power factor, the Department used a power factor of 1.0 in calculating the efficiency levels for its engineering analysis and used a power factor of 1.0 when it analyzed candidate standard levels for this ANOPR.

However, in real-world installations, the loads experienced by distribution transformers are likely to have power factors of less than 1.0. The National Rural Electric Cooperative Association (NRECA) commented that setting the power factor to the value of 1.0 is probably not adequate for most transformers since they service loads with less than a unity power factor. (NRECA, No. 40 at p. 4) Because the LCC analysis models transformers installed and operated in the field, DOE created a spreadsheet with an adjustable power factor, thereby enabling the LCC to run at power factors lower than 1.0. The Department requests specific stakeholder comment on the power factor of 1.0 assumption.

e. Load Growth

The LCC projects the operating costs for transformer operation many years into the future. This requires an estimate of how the load on individual transformers will change over time, *i.e.*, the load growth. On this issue, CDA

observed that a transformer's initial loading is almost certain to increase over its typically long service life of approximately 40 years. CDA also stated that since transformers tend to stay in place for decades once installed, what appears to be light loading in a new subdivision may become dramatically higher over time. CDA believes that more research is needed and the Department should be cautious in assuming that low load factors are typical across the spectrum of the residential market. (CDA, No. 9 at pp. 4–5) NEMA stated that the Department's assumption that the loads on transformers grow by 1 percent per year is incorrect. It agreed that the overall growth in transformer loads is 1–2 percent per year, but stated that for medium-voltage, dry-type transformers, this growth is met by the purchase of additional transformers, not by increased load on existing transformers. It suggested that the load growth per transformer should be zero percent. (NEMA, No. 26 at p. 3) NRECA commented that while the Department's transformer load growth model has 0 percent, 1 percent, or 2 percent per year input selections available, this may not be adequate to represent load growth on rural electric transformers. (NRECA, No. 40 at p. 4) HVOLT commented that transformer loads start out with nearly the same load that they will see for their expected life since residential transformers are assigned to a group of homes that are usually built within a couple of years of each other. Heating/cooling, water heating, laundry, and cooking are the big loads that begin as soon as the service is installed and there is little subsequent residential load growth. However, commercial and industrial transformers, *i.e.* medium-voltage dry-type, are sized to satisfy their intended loads, and new load expansion results in installation of a new transformer. (HVOLT, No. 42 at p. 1) CDA noted that it is reasonable to expect residential transformer loading to increase over time as people add appliances and air conditioning to existing dwellings. Also, CDA found many instances where loads increased in commercial structures due to the addition of electrical loads to existing buildings. (CDA, No. 43 at p. 2) The Department received stakeholder guidance during the October 17, 2002, webcast that a zero-percent load growth was the preferable default for dry-type distribution transformers.

For liquid-immersed transformers, the Department used as the default scenario a 1-percent-per-year load growth, *i.e.*, a medium rate, as identified in ORNL–6847, Determination Analysis of Energy Conservation Standards for Distribution Transformers. For dry-type transformers, the Department applied a zero-percent load growth. The Department applied the load growth factor to each transformer beginning in 2007, the expected effective date of the standard. For exploration of the LCC sensitivity to variations in load growth, the Department included the ability to examine scenarios with 0-percent, 1-percent, and 2-percent load growth. As highlighted in section IV.E, the Department seeks comments from stakeholders on the issue of load growth.

f. Electricity Costs

The Department needs estimates of electricity prices and costs to place a value on transformer losses for inclusion in the LCC calculation. Stakeholders had a series of suggestions regarding the electricity prices and costs that the Department should use in its LCC analysis. NEMA stated that for utility applications, the Department should use average utility electricity costs as the basic electricity price. It urged DOE to seek input from utilities on their current rates. (NEMA, No. 26 at pp. 2–3) NEMA suggested that for commercial and industrial applications, DOE should use average electricity prices. (NEMA, No. 7 at p. 11) NEMA also commented that since deregulation, electricity rates for all customers have decreased. In addition, NEMA noted that many large industrial customers have negotiated rates that merely keep them as customers, with little or no utility profit. Utilities have done this to maintain load factors and the industrial rate in this case is near their cost. Therefore, DOE should seek input from public- and investor-owned utilities on rates. (NEMA, No. 26 at p. 3)

NRDC urged DOE to look carefully at recent energy price trends and to include in the range of its analysis the levels of upward variation in price that occurred in California during 2001. (NRDC, No. 5 at p. 5, No. 25 at p. 2, No. 27 at pp. 2–3) CDA commented that a heavily loaded transformer that was designed to minimize mainly no-load losses will have significantly greater load losses than no-load losses during peak times. It is also at these peak times that cost per kWh is highest and the economic justification is greatest to address load losses. (CDA, No. 9 at p. 3) CDA also urged the Department to consider the effect of minimization of the load loss of transformers on peak-hour utility demands. CDA also commented that there is a large variation in electricity costs among utilities, with some utilities charging relatively high electricity prices for industrial customers. (CDA, No. 43 at p. 2) HVOLT commented that NEMA used $0.065/kWh which continues to be close to reality. (HVOLT, No. 42 at p. 1) NRECA commented that marginal electricity prices are not necessarily something that a distribution cooperative can determine accurately, at least not on an hour-by-hour basis, because most electricity purchases by cooperatives are not made based upon hourly differentiated rates. (NRECA, No. 40 at p. 3)

Since the liquid-immersed transformer market is dominated by utilities, the Department used marginal wholesale electricity prices to reflect peak impacts for the liquid-immersed design lines (see TSD Chapter 8). For utilities, marginal wholesale electricity prices are the prices experienced for the last kWh of electricity produced. A utility's marginal price can be higher or lower than its average price, depending on the relationships between capacity, generation, transmission, and distribution costs. The general structure of the hourly marginal cost equation divides the costs of the electricity into capacity components and energy cost components. The capacity components include generation capacity, transmission capacity, and distribution capacity. Capacity components also include a reserve margin needed to assure system reliability. Energy cost components include a marginal cost of supply that varies by hour, factors that account for losses, and cost recovery of associated marginal expenses. The Department applied this specific equation to the calculation of the marginal wholesale cost of supply of electricity to cover transformer losses. The Department used published FERC Form 714 data and California, Pennsylvania and New York electricity market data for the year 1999 to determine these costs.

Since the dry-type transformer market is dominated by commercial and industrial customers, the Department's calculation of monthly customer incremental retail electricity costs from transformer losses used a representative set of actual utility tariff formulas from the year 2002. Utility tariffs include fixed charges, energy (per kWh) charges, and demand (per kW) charges. Utilities typically group the rates for the different charges by blocks defined by levels of energy use and demand. The tariff formulas contain a series of blocks and several parameters per block which define the charges in that block of use. The LCC spreadsheet for dry-type transformers contains a customer bill

calculator that calculates customer bills based on information collected from a representative set of utility tariffs, seasonal charges, tariff blocks, and the fixed, energy, and demand charges in each block. The Department collected 218 published utility tariffs from 90 utilities to provide the data for the bill calculator.

As highlighted in section IV.E, the Department seeks input from stakeholders regarding the appropriate energy costs to use in this rulemaking.

g. Electricity Price Trends

NRDC commented that all three of the proposed electricity price trend scenarios explore real electricity price increases relative to 2001 prices. (NRDC, No. 27 at p. 2) CDA commented that there are growing indications that electricity prices will not be declining in future years as demand catches up with, and perhaps exceeds, available generation and transmission capacity. (CDA, No. 43 at p. 2)

For the relative change in electricity prices for future years, the Department used the price trends from three *AEO 2003* forecast scenarios and a constant real price scenario. LCC spreadsheet users have the choice of four scenarios: *AEO 2003* low growth scenario, *AEO 2003* reference scenario, *AEO 2003* high growth scenario, and constant real price scenario. To reflect the uncertainty in forecasts of economic growth, the *AEO 2003* forecasts use high and low economic growth cases along with the reference case to project the possible energy markets. The high economic growth case incorporates higher population, labor force, and productivity growth rates than the reference case. Investment, disposable income, and industrial production are higher and economic output is projected to increase by 3.5 percent per year between 2001 and 2025. The low economic growth case assumes lower population, labor force, and productivity gains, with resulting higher prices and interest rates and lower industrial output growth. In the low economic growth case, economic output is expected to increase by 2.5 percent per year over the forecast horizon. The ANOPR uses the trend from the reference scenario, 3.0 percent, as its default ''medium'' scenario.

h. Equipment Lifetime

The Department defined distribution transformer service life as the age at which the transformer retires from service. NEMA suggested that the Department use a transformer lifetime of 30 years for the LCC analysis. (NEMA, No. 7 at pp. 10–11) NEMA later suggested that DOE should investigate the actual lifetime of dry-type distribution transformers which it felt could be closer to 20 years, rather than the 32 years assumed in the Department's analysis. (NEMA, No. 26 at p. 3) CDA commented that it is not uncommon to find transformers 50-plus years old still in service. (CDA, No. 43 at p. 3)

The Department assumed, based on ORNL–6847, Determination Analysis of Energy Conservation Standards for Distribution Transformers, that the average life of distribution transformers is 32 years. After preparing an in-depth review of average lifetimes during the Determination Analysis, ORNL found it to be 32 years. The Department still believes this is an accurate representation of the average lifetime of a distribution transformer. This lifetime assumption includes a constant failure rate of 0.5 percent/year due to lightning and other random failures unrelated to transformer age and an additional corrosive failure rate of 0.5 percent/year at year 15 and beyond. The Department adjusted the retirement distribution to maintain an average life of 32 years for both liquid-immersed and dry-type transformers.

i. Maintenance Costs

The Department assumed that the cost for general maintenance of distribution transformers will not change with increased efficiency. In practice, there is little scheduled maintenance for distribution transformers. The maintenance that does occur normally consists of brief annual checks for dust buildup, vermin infestation, and accident or lightning damage.

j. Discount Rates

The discount rate is the rate at which future expenditures are discounted to estimate their present value. Stakeholders expressed concern over the appropriate discount rate to use in the LCC analysis. NEMA stated that 8 percent should be the minimum discount rate considered and that a discount range of 15–20 percent adjusted for inflation (real) would more closely reflect opportunity costs for business. (NEMA, No. 7 at p. 11) NEMA also suggested that the Department use a high hurdle rate of 35 percent for the LCC analysis. (NEMA, No. 26 at p. 2) Mr. John Ainscough also noted that DOE should consider the opportunity cost of capital that may be diverted from other areas to pay for more expensive transformers. (J. Ainscough, No. 15 at p. 1) NRDC stated that the 35 percent discount rate is unjustified, pointing out that this discount rate is evidence of the type of market failure that standards are supposed to address. (NRDC, No. 27 at p. 3) NRDC stated that an 8 percent discount rate is too high. NRDC noted that it has demonstrated in previous appliance rulemakings that market rates of return on investment are in the range of 5–5.5 percent real, at best. (NRDC, No. 5 at p. 4) NRDC stated that these are the highest rates that are defensible and recommended that the distribution of rates used for the analysis center around 2–3 percent real to reflect reduced societal risk resulting from energy efficiency standards. NRDC also stated that it agrees with the Department that the actual cost of capital represents the appropriate discount rate for the LCC analysis. (NRDC, No. 25 at p. 2 and No. 27 at p. 2) Cooper Power Systems commented that the discount rate selection method should be similar to that used by DOE to determine the present value of improved efficiency in other energy savings projects such as for refrigerators and motor efficiency. (Cooper Power Systems, No. 34 at p. 2)

Lacking stakeholder consensus, the Department used the classic economic definition that discount rates are equal to the cost of capital. The cost of capital is a combination of debt interest rates and the cost of equity capital to the affected firms and industries. For each design line, the Department divided ownership into classes of potential customers. Table II.10 shows the classes of owners and their percentages by design line. The Department determined from the Damodaran online investment survey *(http://pages.stern.nyu.edu/adamodar/)* that each class of potential owners has a distribution of discount rates. The discount rate distribution for each design line analyzed in the LCC analysis is a weighted sample that combines estimated ownership percentages based on the 2001 shipment estimates and their respective discount rates. Table II.10 also shows the mean real discount rates by ownership category used by DOE in the analysis. In addition, Table II.10 shows the resultant weighted average discount rates for each design line. A more detailed description of the data sources is provided in Chapter 8 of the TSD. As highlighted in section IV.E, the Department seeks input from stakeholders on the appropriateness of these discount rates.

TABLE II.10.—WEIGHTED AVERAGE DISCOUNT RATES BY DESIGN LINE AND OWNERSHIP CATEGORY

Mean real discount rate		Transformer ownership category					
Design line	Weighted average discount rate (percent)	Property owners	Industrial companies	Commercial companies	Investor-owned utilities	Publicly owned utilities	Government offices
		4.35%	7.55%	7.46%	4.16%	4.31%	3.33%
		Estimated ownership (%)					
1	4.24	0.4	0.5	0.9	72.0	26.0	0.2
2	4.24	0.4	0.5	0.9	72.0	26.0	0.2
3	4.40	2.1	2.4	4.5	80.0	10.0	1.0
4	4.24	0.4	0.5	0.9	72.0	26.0	0.2
5	5.38	9.5	9.5	27.0	35.0	15.0	4.0
6	6.56	19.0	19.0	54.0	0.0	0.0	7.9
7	6.56	19.0	19.0	54.0	0.0	0.0	7.9
8	6.56	19.0	19.0	54.0	0.0	0.0	7.9
9	6.56	19.0	19.0	54.0	0.0	0.0	7.9
10	6.56	19.0	19.0	54.0	0.0	0.0	7.9
11	6.56	19.0	19.0	54.0	0.0	0.0	7.9
12	6.56	19.0	19.0	54.0	0.0	0.0	7.9
13	6.56	19.0	19.0	54.0	0.0	0.0	7.9

3. Payback Period

A more energy efficient device will usually cost more to buy than a device of standard energy efficiency. But the more efficient device will usually cost less to operate due to the reductions in operating costs (*i.e.*, lower energy bills). The PBP is the time (usually expressed in years) it takes to recover the additional installed cost of the efficient device through energy cost savings. Payback analysis is a common technique used to evaluate investment decisions. Because the LCC analysis uses distributions of inputs to represent individual transformer purchases, results such as PBPs are given in the form of distributions.

The data inputs to the payback calculation are the purchase expense, otherwise known as the total installed consumer cost or ''first cost,'' and the annual operating costs for each selected design. The inputs to the purchase expense are the equipment price and the installation cost with appropriate markups. The inputs to the operating costs are the annual energy consumption and the electricity price. The payback calculation uses the same inputs as the LCC analysis but since this is a ''simple'' payback, the operating cost is for the year the standard takes effect, assumed here to be 2007.

4. Life-Cycle Cost and Payback Period Results

The following 13 tables (Table II.11 through Table II.23) present the findings from the Department's LCC analysis. For each evaluated design line and each candidate standard level, the Department presents the minimum efficiency candidate standard level, the percent of transformers that experience positive (or zero) LCC savings when subject to the standard level, the mean LCC savings, and the mean PBP. The Department presents these findings to facilitate stakeholder review of the LCC analysis. The Department has not selected any specific standard level for any design line. Graphical illustrations that provide a more comprehensive report of the LCC findings are available in Chapter 8 of the TSD. For each LCC analysis, candidate standard level 1 is equivalent to the efficiency level of NEMA TP 1–2002.

In the paragraph preceding each of the following 13 tables, the Department provides the average efficiency and the average manufacturer's selling price of the baseline transformers selected during the LCC analysis for each design line's representative unit. This average efficiency is the mean of the efficiencies of all the transformers selected under the baseline scenario. The Department selected a range of transformer designs according to customer A and B evaluation combinations in the baseline and candidate standard level scenarios. Some units selected have high efficiencies while others have low efficiencies. For three of the thirteen design lines (1, 3, and 5), the average efficiency of the baseline transformers is higher than the minimum efficiency selected for candidate standard level 1. While such a relationship might seem inappropriate, the Department notes that a direct comparison between the baseline average efficiency and the efficiency level chosen for any candidate standard is not meaningful. That is because the former value is an average efficiency of those transformers selected under baseline conditions while the latter value is the minimum efficiency for the selection of transformer designs meeting a candidate standard level.

Table II.11 presents the summary of the LCC and PBP analyses for the representative unit from design line 1, a 50 kVA, liquid-immersed, single-phase, pad-mounted transformer. For this unit, the average efficiency of the baseline transformers selected during the LCC analysis was 98.91 percent and the average manufacturer's selling price was $1,580.

TABLE II.11.—SUMMARY OF LCC & PBP RESULTS FOR THE DESIGN LINE 1 REPRESENTATIVE UNIT

	Candidate standard level				
	1	2	3	4	5
Minimum Efficiency (%)	98.90	99.10	99.30	99.40	99.58
Transformers having LCC Savings ≥ $0 (%)	99.5	86.3	41.4	35.8	13.1
Mean LCC Savings ($)	134	158	−13	−64	−359
Mean Payback (Years)	6.3	14.5	25.1	23.3	32.5

Table II.12 presents the summary of the LCC and PBP analyses for the representative unit from design line 2, a 25 kVA, liquid-immersed, single-phase, pole-mounted transformer. For this unit, the average efficiency of the baseline transformers selected during the LCC analysis was 98.59 percent and the average manufacturer's selling price was $950.

TABLE II.12.—SUMMARY OF LCC & PBP RESULTS FOR THE DESIGN LINE 2 REPRESENTATIVE UNIT

	Candidate standard level				
	1	2	3	4	5
Minimum Efficiency (%)	98.70	98.90	99.10	99.30	99.47
Transformers having LCC Savings ≥ $0 (%)	99.7	66.7	26.8	13.7	2.8
Mean LCC Savings ($)	99	62	−76	−216	−492
Mean Payback (Years)	5.8	21.7	30.3	29.7	40.7

Table II.13 presents the summary of the LCC and PBP analyses for the representative unit from design line 3, a 500 kVA, liquid-immersed, single-phase distribution transformer. For this unit, the average efficiency of the baseline transformers selected during the LCC analysis was 99.33 percent and the average manufacturer's selling price was $4,599.

TABLE II.13.—SUMMARY OF LCC & PBP RESULTS FOR THE DESIGN LINE 3 REPRESENTATIVE UNIT

	Candidate standard level				
	1	2	3	4	5
Minimum Efficiency (%)	99.30	99.40	99.60	99.70	99.75
Transformers having LCC Savings ≥ $0 (%)	96.5	97.5	70.3	68.9	52.1
Mean LCC Savings ($)	884	1,606	1,168	1,838	1,292
Mean Payback (Years)	8.2	8.3	16.9	18.1	23.6

Table II.14 presents the summary of the LCC and PBP analyses for the representative unit from design line 4, a 150 kVA, liquid-immersed, three-phase distribution transformer. For this unit, the average efficiency of the baseline transformers selected during the LCC analysis was 98.86 percent and the average manufacturer's selling price was $3,577.

TABLE II.14.—SUMMARY OF LCC & PBP RESULTS FOR THE DESIGN LINE 4 REPRESENTATIVE UNIT

	Candidate standard level				
	1	2	3	4	5
Minimum Efficiency (%)	98.90	99.10	99.30	99.40	99.56
Transformers having LCC Savings ≥ $0 (%)	97.5	90.9	73.7	75.9	50.8
Mean LCC Savings ($)	574	733	491	585	301
Mean Payback (Years)	7.7	12.1	16.5	16.2	24.7

Table II.15 presents the summary of the LCC and PBP analyses for the representative unit from design line 5, a 1500 kVA, liquid-immersed, three-phase distribution transformer. For this unit, the average efficiency of the baseline transformers selected during the LCC analysis was 99.35 percent and the average manufacturer's selling price was $11,088.

TABLE II.15.—SUMMARY OF LCC & PBP RESULTS FOR THE DESIGN LINE 5 REPRESENTATIVE UNIT

	Candidate standard level				
	1	2	3	4	5
Minimum Efficiency (%)	99.30	99.40	99.50	99.60	99.66
Transformers having LCC Savings ≥ $0 (%)	97.8	97.2	80.2	78.5	64.4
Mean LCC Savings ($)	4,174	6,617	7,451	7,268	6,838
Mean Payback (Years)	6.2	6.7	13.4	13.4	17.7

Table II.16 presents the summary of the LCC and PBP analyses for the representative unit from design line 6, a 25 kVA, low-voltage, dry-type, single-phase transformer. For this unit, the average efficiency of the baseline transformers selected during the LCC analysis was 95.36 percent and the average manufacturer's selling price was $864.

TABLE II.16.—SUMMARY OF LCC & PBP RESULTS FOR THE DESIGN LINE 6 REPRESENTATIVE UNIT

	Candidate standard level				
	1	2	3	4	5
Minimum Efficiency (%)	98.00	98.20	98.40	98.70	98.79
Transformers having LCC Savings ≥ $0 (%)	99.3	99.1	99.1	94.1	92.8
Mean LCC Savings ($)	1,777	1,865	1,948	1,906	1,867
Mean Payback (Years)	1.7	2.6	2.6	5.6	6.7

Table II.17 presents the summary of the LCC and PBP analyses for the representative unit from design line 7, a 75 kVA, low-voltage, dry-type, three-phase transformer. For this unit, the average efficiency of the baseline transformers selected during the LCC analysis was 96.43 percent and the average manufacturer's selling price was $1,808.

TABLE II.17.—SUMMARY OF LCC & PBP RESULTS FOR THE DESIGN LINE 7 REPRESENTATIVE UNIT

	Candidate standard level				
	1	2	3	4	5
Minimum Efficiency (%)	98.00	98.30	98.60	98.90	99.09
Transformers having LCC Savings ≥ $0 (%)	100.0	99.0	98.4	88.8	77.5
Mean LCC Savings ($)	3,156	3,588	3,927	3,910	3,799
Mean Payback (Years)	0.6	2.6	3.5	7.1	10.8

Table II.18 presents the summary of the LCC and PBP analyses for the representative unit from design line 8, a 300 kVA, low-voltage, dry-type, three-phase transformer. For this unit, the average efficiency of the baseline transformers selected during the LCC analysis was 97.79 percent and the average manufacturer's selling price was $4,735.

TABLE II.18.—SUMMARY OF LCC & PBP RESULTS FOR THE DESIGN LINE 8 REPRESENTATIVE UNIT

	Candidate standard level				
	1	2	3	4	5
Minimum Efficiency (%)	98.60	98.80	99.00	99.20	99.27
Transformers having LCC Savings ≥ $0 (%)	99.8	97.8	96.6	92.1	89.4
Mean LCC Savings ($)	6,761	7,035	7,899	8,941	8,712
Mean Payback (Years)	1.0	2.9	4.5	6.5	7.4

Table II.19 presents the summary of the LCC and PBP analyses for the representative unit from design line 9, a 300 kVA, medium-voltage, dry-type, three-phase transformer with a 45 kV BIL. For this unit, the average efficiency of the baseline transformers selected during the LCC analysis was 97.90 percent and the average manufacturer's selling price was $6,084.

TABLE II.19.—SUMMARY OF LCC & PBP RESULTS FOR THE DESIGN LINE 9 REPRESENTATIVE UNIT

	Candidate standard level				
	1	2	3	4	5
Minimum Efficiency (%)	98.60	98.80	99.00	99.20	99.31
Transformers having LCC Savings ≥ $0 (%)	95.8	93.4	95.2	84.6	70.0
Mean LCC Savings ($)	6,465	7,550	8,536	8,942	7,838
Mean Payback (Years)	4.8	6.1	5.7	8.9	13.1

Table II.20 presents the summary of the LCC and PBP analyses for the representative unit from design line 10, a 1500 kVA, medium-voltage, dry-type, three-phase transformer with a 45 kV BIL. For this unit, the average efficiency of the baseline transformers selected during the LCC analysis was 98.63 percent and the average manufacturer's selling price was $22,473.

TABLE II.20.—SUMMARY OF LCC & PBP RESULTS FOR THE DESIGN LINE 10 REPRESENTATIVE UNIT

	Candidate standard level				
	1	2	3	4	5
Minimum Efficiency (%)	99.10	99.20	99.30	99.40	99.44
Transformers having LCC Savings ≥ $0 (%)	89.9	90.5	90.0	72.1	64.5
Mean LCC Savings ($)	14,458	16,130	18,050	15,594	13,704
Mean Payback (Years)	8.5	8.5	8.9	13.9	15.6

Table II.21 presents the summary of the LCC and PBP analyses for the representative unit from design line 11, a 300 kVA, medium-voltage, dry-type, three-phase transformer with a 95 kV BIL. For this unit, the average efficiency of the baseline transformers selected during the LCC analysis was 97.77 percent and the average manufacturer's selling price was $10,142.

TABLE II.21.—SUMMARY OF LCC & PBP RESULTS FOR THE DESIGN LINE 11 REPRESENTATIVE UNIT

	Candidate standard level				
	1	2	3	4	5
Minimum Efficiency (%)	98.50	98.70	98.90	99.00	99.10
Transformers having LCC Savings ≥ $0 (%)	96.4	94.9	87.4	75.6	68.0
Mean LCC Savings ($)	4,473	5,350	5,734	5,136	4,666
Mean Payback (Years)	5.8	6.7	9.3	12.5	14.3

Table II.22 presents the summary of the LCC and PBP analyses for the representative unit from design line 12, a 1500 kVA, medium-voltage, dry-type, three-phase transformer with a 95 kV BIL. For this unit, the average efficiency of the baseline transformers selected during the LCC analysis was 98.67 percent and the average manufacturer's selling price was $26,542.

TABLE II.22.—SUMMARY OF LCC & PBP RESULTS FOR THE DESIGN LINE 12 REPRESENTATIVE UNIT

	Candidate standard level				
	1	2	3	4	5
Minimum Efficiency (%)	99.00	99.10	99.30	99.40	99.45
Transformers having LCC Savings ≥ $0 (%)	91.5	85.8	84.6	71.0	59.6
Mean LCC Savings ($)	8,369	12,318	15,390	14,365	11,341
Mean Payback (Years)	8.0	9.6	10.7	14.2	17.1

Table II.23 presents the summary of the LCC and PBP analyses for the representative unit from design line 13, a 2000 kVA, medium-voltage, dry-type, three-phase transformer with a 125 kV BIL. For this unit, the average efficiency of the baseline transformers selected during the LCC analysis was 98.73 percent and the average manufacturer's selling price was $37,082.

TABLE II.23.—SUMMARY OF LCC & PBP RESULTS FOR THE DESIGN LINE 13 REPRESENTATIVE UNIT

	Candidate standard level				
	1	2	3	4	5
Minimum Efficiency (%)	99.00	99.10	99.30	99.40	99.45
Transformers having LCC Savings ≥ $0 (%)	92.0	90.6	76.9	77.6	44.9
Mean LCC Savings ($)	11,691	16,119	16,685	19,706	7,593
Mean Payback (Years)	6.7	8.5	12.7	12.7	20.3

G. Shipments Analysis

This section presents the Department's shipments analysis, which is a key input into the national impact analysis (section II.H). Additional detail on the shipments analysis can be found in Chapter 9 of the TSD.

1. Shipments Model

The shipments model combines the shipments estimates for 2001, transformer quantity indices from the U.S. Bureau of Economic Analysis (BEA), electricity market shares from DOE's Energy Information Administration (EIA), and equipment price estimates from the LCC to project transformer shipments. The shipments model produces both a backcast (an estimate backwards in time) and a forecast of total shipments. The shipments forecast and a retirement function are used to calculate in-service transformer age distribution, and

estimate the proportion of transformers in-service impacted by candidate standard levels and transformer retirements. The Department determines the number of transformers manufactured to satisfy new electrical capacity by subtracting transformer retirements from total shipments.

Distribution transformer shipment estimates are also used as an input to the MIA. That analysis, which DOE will undertake after the ANOPR is published, will estimate the impacts of potential efficiency standards on manufacturers. The Department will report the findings of the MIA in the NOPR.

The Department considered several approaches to developing an estimate of the shipments of distribution transformers in 2001. Manufacturers consider annual shipment information extremely sensitive, and several manufacturers who met with the Department in early 2002 indicated they would not be able to provide this data, even under a confidentiality agreement with one of the Department's contractors. Furthermore, the Department recognizes that there are more than 100 manufacturers supplying distribution transformers to the U.S. market. It would be difficult to prepare an estimate on a company-by-company basis.

To resolve this impasse for this specific data gap, the Department contracted a third-party, HVOLT, only to prepare a shipments estimate. This contractor developed an estimate of distribution transformer shipments in 2001 by constructing a market participation matrix incorporating manufacturers and their product lines. HVOLT then populated this matrix based on its knowledge of the industry and a limited number of confidential interviews with key manufacturers and users. These estimates were rolled-up and then given to the Department as national aggregate shipment totals for each of the 115 kVA ratings (see Tables 9.3.2 through 9.3.4 in TSD Chapter 9).

Table II.24 presents the shipment estimates in both units shipped and megavolt-amperes (MVA) shipped, and the approximate value of these shipments, showing that the distribution transformer industry totaled about $1.6 billion dollars in 2001 (2001 dollars).

TABLE II.24.—NATIONAL DISTRIBUTION TRANSFORMER SHIPMENT ESTIMATES FOR 2001

Distribution transformer product class	Units shipped	MVA capacity shipped	Shipment value ($million)
1. Liquid-immersed, medium-voltage, single-phase	977,388	36,633	698.8
2. Liquid-immersed, medium-voltage, three-phase	79,367	42,887	540.4
3. Dry-type, low-voltage, single-phase	23,324	983	17.8
4. Dry-type, low-voltage, three-phase	290,818	21,909	235.0
5. Dry-type, medium-voltage, single-phase, 20–45 kV BIL	119	18	0.5
6. Dry-type, medium-voltage, three-phase, 20–45 kV BIL	650	776	13.5
7. Dry-type, medium-voltage, single-phase, 46–95 kV BIL	121	22	0.6
8. Dry-type, medium-voltage, three-phase, 46–95 kV BIL	2,371	3,913	68.1
9. Dry-type, medium-voltage, single-phase, ≥96 kV BIL	20	4	0.1
10. Dry-type, medium-voltage, three-phase, ≥96 kV BIL	187	367	6.4
Total	1,374,366	107,512	1,581.2

The Department used the forecasts of shipments for the base case and the standards case to provide an estimate of the annual sales and number of transformers in-service in any given year during the forecast period. The estimate includes the age distribution of transformers for each transformer type (classified according to product classes). The Department used annual transformer sales to calculate equipment costs for the NPV and the age distribution of the transformers in-service to calculate the energy use for the NES. The Department chose an accounting model method to prepare shipment scenarios for the base case and the candidate standard level cases. The model keeps track of the aging and replacement of transformer capacity given a projection of future transformer sales growth.

Shipments are organized into two categories: replacements and new capacity. Replacements occur when old transformers break down, corrode, are struck by lightning, or otherwise need to be replaced. New capacity purchases occur due to increases in electricity use that may be driven by increasing population, increasing commercial and industrial activity, or growth in electricity distribution systems. The model starts with an estimate of the national growth in cumulative transformer capacity to estimate total shipments. The model then divides the total shipments into liquid-immersed and dry-type transformers using their respective market shares estimated from electricity consumption data. The liquid-immersed and dry-type transformers are further divided into their respective product classes using estimates of the relative market share for different design and size categories. Seven modeling steps are performed as follows:

- In the data collection step, the Department acquires and processes information on transformer shipments.
- The construction of an aggregate shipments backcast uses shipments and electricity consumption data to provide an estimate of historical total annual capacity shipped.
- The construction of an aggregate shipments forecast applies a shipments growth rate to provide a base case annual-shipments estimate for the future.
- The liquid-immersed and dry-type market share estimate divides the total capacity shipped into liquid-immersed and dry-type transformers.
- The modeling of the purchase price elasticity provides an estimate of how higher purchase prices due to a candidate standard level can impact the future capacity shipped.
- The accounting of transformer sales and quantity in-service uses the shipments estimates and a retirement function to derive an annual age distribution of transformers in-service.
- A final consistency check confirms that the estimates of the shipments model are consistent with available data on utility transformer purchases and replacements.

The following section describes the inputs to the shipments model at different stages of the calculation. The Department welcomes suggestions from

stakeholders for improving the data inputs to the model.

2. Shipments Model Inputs

The shipments model inputs correspond closely to the steps of the shipments calculation described in the previous section. Some inputs come from outside the shipments calculations, while other inputs for later stages of the calculation are intermediate results calculated from earlier inputs. The final outputs of the shipments calculation are the annual shipments estimates and the annual estimates of the age distribution of transformers in-service.

Table II.25 presents a summary of these shipments model inputs. Chapter 9 of the TSD contains a detailed description of all the shipments model inputs.

TABLE II.25.—SUMMARY OF SHIPMENTS MODEL INPUTS

Input	Description
Shipments data	Third party expert (HVOLT) for the year 2001.
Shipments backcast	For years 1977–2000: Used BEA's manufacturing data for distribution transformers. Source: http://www.bea.doc.gov/bea/pn/ndn0304.zip. For years 1950–1976: Based on EIA's electricity sales data. Source: http://www.eia.doe.gov/emeu/aer/txt/stb0805.xls.
Shipments forecast	Years 2002–2035: Based on *AEO 2003.*
Dry-type/liquid-immersed market shares	Based on EIA's electricity sales data and *AEO 2003.*
Regular replacement market	Based on a survival function constructed from a Weibull distribution function normalized to produce a 32-year mean lifetime. Source: ORNL 6804/R1, The Feasibility of Replacing or Upgrading Utility Distribution Transformers During Routine Maintenance, page D–1.
Elasticities	For liquid-immersed transformers: • Low: 0.00 • Medium: −0.04 • High: −0.20 For dry-type transformers: • 0.00

The Department determined the price elasticities for liquid-immersed transformers by calibrating a model employing a standard econometric logit equation, fit to FERC Form No. 1 data. The fit resulted in a price elasticity of −0.04, which the Department used as the ''medium'' scenario. For a ''high'' sensitivity to price change scenario, DOE used an elasticity of −0.20. The ''low'' scenario used zero elasticity or no impact in purchase decisions from a price change.

Total shipments depend on assumptions regarding the lifetime of a distribution transformer and the growth in new electricity demand. For consistency with the LCC, the Department used the same 32-year average lifetime.

3. Shipments Model Results

The main output of the shipments model is the total capacity of distribution transformers shipped in each year from 2007 through 2035. Total shipments for all CSLs for liquid-immersed and dry-type distribution transformers are shown in Table II.26.

TABLE II.26.—CUMULATIVE TRANSFORMER SHIPMENTS BETWEEN 2007–2035 BY CANDIDATE STANDARD LEVEL

Distribution transformers	Transformer capacity shipments in billion kVA					
	Base case	CSL 1	CSL 2	CSL 3	CSL 4	CSL 5
Liquid-immersed	3.06	3.06	3.05	3.04	3.03	3.01
Dry-type	1.23	1.23	1.23	1.23	1.23	1.23

The biggest factor that influences the size of the potential standards-induced change in shipments is the actual equipment price increase due to standards. The Department assumed price impacts only for liquid-immersed transformers. If price increases are large, the shipments volume decreases almost proportionally to the price increase, but because the price elasticity of liquid-immersed transformers is less than one, price increases result in increased gross sales dollar volume to the transformer manufacturer. The Department will examine the net financial impact of these opposing effects in more detail in the MIA.

H. National Impact Analysis

This section presents the methodology and structure the Department used to implement the national impact analysis. This analysis assessed future NES from candidate transformer standards as well as the national economic impacts using the NPV metric. Additional detail is found in Chapter 10 of the TSD.

The NES is the cumulative incremental energy savings from a transformer efficiency standard relative to a base case of no national standard over a forecast period that ends in the year 2035. The Department calculated the NES for each candidate standard level in units of quadrillion (quads) Btus (British thermal units) for standards assumed to be implemented in the year 2007. The NES calculation started with transformer shipments and quantity in-service from the shipments model. The Department calculated total energy use by transformers in-service using estimates of transformer losses from the LCC analysis, for each year for both a base case and a candidate standards case.

Over time, in the standards case, more efficient transformers gradually replace less efficient ones. Thus, the energy per unit capacity used by transformers in-service gradually decreases in the

standards case relative to the base case. The Department converted the site energy used by the transformers into the amount of energy consumed at the source of electricity generation (the source energy) with a site-to-source conversion factor. The site-to-source factor accounts for transmission, distribution, and generation losses. For each year analyzed, the difference in source energy use between the base case and standard scenario is the annual energy savings. The Department summed the undiscounted annual energy savings from 2007 through 2035 to calculate the total NES for the forecast period. The NES analysis which will accompany the NOPR will include both undiscounted and discounted values for future energy savings to account for their timing.

The NPV is the net present value of the incremental economic impacts of a candidate standard levels. The Department calculated the NPV in a way that is similar to the NES, except that incremental costs are estimated instead of energy, and the net costs are discounted rather than calculated as an undiscounted sum. Like the NES, the NPV calculation started with transformer shipments and quantity in-service from the shipments model. Using estimates of transformer installed costs, losses, and electricity costs from the LCC analysis, the Department calculated the national expenditures for installed transformer purchases and the corresponding operating costs of the transformers in-service for each year for both a base case and standards case.

Over time, in the standards case, transformers that are both more expensive and more efficient gradually replace less efficient transformers. Thus, the operating cost per unit capacity used by the transformers in-service gradually decreases in the standards case relative to the base case, while the equipment costs increase. The Department discounted purchases and expenses and operating costs for transformers using a national average discount factor as described in Chapter 10 of the TSD. The Department calculated the NPV impact of transformers that will be bought between 2007 and 2035.

To make the analysis more accessible to all stakeholders, the Department prepared a national impact spreadsheet model (available on the Department's website) in Microsoft Excel to execute the calculations outlined above. The spreadsheet calculates capacity and operating cost savings associated with each of the candidate standard levels. The NES analysis considers cumulative energy savings through the year 2035, while the NPV considers capacity and operating cost savings through the year 2070 [3] for transformers bought on or before 2035. By taking the difference between the base case and candidate standard levels, summing, and discounting the annual results, the spreadsheet calculates an NPV for each candidate standard level relative to the base case.

1. Method

Both calculations start by using the estimate of shipments and quantity in-service that resulted from the shipments model (section II.G) and then proceed with the NES and NPV calculations. Key inputs from the LCC analysis are the average rated losses for both no-load and load losses, and the equipment cost of transformers, including installation. The losses and the equipment costs then go through a transformer size and product class adjustment that converts the data from representative design lines to average product class information. Additional inputs regarding average and peak losses—including root mean square (RMS) loading, peak loading, and peak responsibility factor—allow a calculation of losses from rated losses at rated loading. At this point, the information flow for the NES and NPV calculation splits into two paths.

On one path, the NES calculation sums the actual losses and the affected in-service transformers, and takes the difference between the base case and standards scenarios to calculate site energy savings. The conversion of site energy savings to energy savings at the source (*i.e.*, at the power plant), is calculated by the National Energy Modeling System (NEMS). The sum of annual energy savings for the forecast period through 2035 then provides the final NES number.

On the other path, the NPV calculation brings in marginal price inputs from the LCC analysis for both energy costs and capacity costs and for both load losses and no-load losses. The marginal prices, when combined with the actual peak and average losses, provide an estimate of the operating cost. Meanwhile, the equipment installed cost multiplied by the annual shipments provides an estimate of the total annual equipment costs. The Department then takes three differences to calculate the net impact of the candidate standard levels. The first difference is between the candidate standard level scenario equipment costs and the base case equipment costs to get the net equipment cost increase from a candidate standard level. The second difference is between the base case operating cost and the candidate standard level operating cost to get the net operating cost savings from a candidate standard level. And the third difference is between the net operating cost savings and the net equipment cost increase to get the net savings (or expense) for each year. The net savings (or expense) is then discounted and summed to the year 2070 for transformers bought on or before 2035 to provide the NPV impact of a candidate standard level.

Table II.27 summarizes the inputs used to calculate the NES and NPV of the various candidate standard levels. A more detailed discussion of the inputs follows the table.

TABLE II.27.—SUMMARY OF NES AND NPV INPUTS

Input	Description
Shipments	Annual shipments from shipments model (*see* details in section II.G.
Effective Date of Standard	Assumed here to be 2007.
Base Case Efficiencies	Constant efficiency through 2035. Equal to weighted-average efficiency in 2007.
Standards Case Efficiencies (2007–2035)	Constant efficiency at the specified standard level from 2007–2035.
Annual Energy Consumption per Unit	Average rated transformer losses are obtained from the LCC analysis, which are then scaled for different size categories, weighted by size market share, adjusted for transformer loading (also obtained from the LCC analysis).
Total Installed Cost per Unit	Weighted-average values as a function of efficiency level (from LCC analysis).

[3] The year 2070 is the rounded sum of 2035 plus 32 years, the average lifetime of distribution transformers.

TABLE II.27.—SUMMARY OF NES AND NPV INPUTS—Continued

Input	Description
Electricity Expense per Unit	Both energy and capacity savings for the two types of transformer losses are multiplied by the average marginal costs for both capacity and energy for the two types of losses (marginal costs are from the LCC analysis).
Escalation of Electricity Prices	*AEO 2003* forecasts (to 2025) and extrapolation for 2035 and beyond (*see* LCC discussion, section II.F).
Electricity Site-to-Source Conversion	A time series conversion factor; includes electric generation, transmission, and distribution losses. Conversion varies yearly and is generated by DOE/EIA's National Energy Modeling System program.
Discount Rates	3% and 7% real.
Analysis Year	Future expenses are discounted to the year of equipment price data, 2001.

The Department provides detailed descriptions of the NES and NPV models below. It provides a descriptive overview of how the Department performed each model's calculations, and follows with a summary of the inputs. Chapter 10 of the TSD contains full technical descriptions of these models and their inputs, processes (with equations, when appropriate), and outputs. After the model descriptions, the Department presents the summary results of the national impacts calculations.

2. National Energy Savings

The Department developed a method to calculate national energy savings resulting from different candidate distribution transformer efficiency standards—the NES. Positive NES values correspond to net energy savings, that is, a decrease in energy consumption with standards in comparison to the energy consumption in a base case.

The Department received a comment from TXU Electric and Gas that energy savings must be tempered with a more comprehensive look at the effects of producing more efficient transformers. TXU Electric and Gas stated that to increase the distribution transformer efficiency there might be a 50 percent increase in production of higher quality core steel and a 30 percent increase in the use of transformer oil in each unit. These products require energy to produce or refine. The production of the core steel is environmentally ''dirty.'' The costs associated with increased energy usage and the environmental impacts of production of higher efficiency transformers should be considered in the cost effectiveness of the improved efficiency. (TXU Electric and Gas, No. 12 at p. 8)

In evaluating and establishing energy efficiency standards, the Department does not presently consider the wide range of externalities associated with the production of higher efficiency products or equipment—in this case, distribution transformers. The difficulties and uncertainties associated with analyzing those externalities would substantially increase the complexity of standards rulemakings and potentially lessen the reliability of their ultimate outcomes. Therefore, in calculating increased costs associated with standards, DOE's current methodology is limited to using the transformer manufacturers' estimated costs of producing more efficient transformers.

a. National Energy Savings Overview

The Department calculated the cumulative incremental energy savings in units of quadrillion Btus (quads) from candidate transformer efficiency standards relative to a base case of no standard over a forecast period that spans the first standards years from 2007 to 2035.

NEMA submitted a comment addressing how the Department should characterize the baseline condition against which energy savings for various candidate standard levels are calculated. In particular, NEMA commented that in principle, the NES analysis should use the same inputs as the LCC analysis. NEMA considered market penetration of more efficient transformers without regulations to be a key aspect of the NES and noted that multiple base case scenarios may be needed. (NEMA, No. 7 at p. 12) Consistent with NEMA's comment, the Department used a range of purchaser valuations given to transformer no-load and load losses, expressed as A and B distributions, to represent customer choice scenarios as noted in section II.F.2.c.

The shipments model provides the estimate for the affected in-service transformers. The key to the NES calculation is in measuring the difference in energy per unit capacity between the standards case and the base case, given the input from the LCC and including the site-to-source conversion factor that translates site energy into energy consumed at the power plant. The next section summarizes the inputs necessary for the NES calculation. The Department welcomes suggestions from stakeholders for possible data enhancements in the NES inputs.

b. National Energy Savings Inputs

The NES model inputs fall into three broad categories: (1) Those that help convert the data from the LCC into data for the product classes and transformer size distributions used in the NES; (2) those that help calculate the unit energy consumption; and (3) site-to-source factors that enable the calculation of source energy consumption from site energy use.

The size scaling of losses and costs adjusts LCC representative design line data so it can represent the size distribution of transformers that are in a particular product class. The mapping of LCC design line data to product classes (Table II.5) provides the proper inter-design line averaging or adjustments for representation of the product classes.

The RMS loading is a key factor in estimating actual load losses given the load losses at rated load for a transformer. Load growth over the lifetime of the transformer can change the average RMS loading experienced by affected transformers. The effective date of the standard impacts the definition of the affected transformers. The unit energy consumption is the energy per unit capacity of an affected transformer and depends on all of the first four inputs.

The electricity site-to-source conversion provides the estimate of energy consumption at the generation station given the energy use at the site of the transformer. Finally, the affected transformers are those in-service transformers that may have different characteristics as a result of a candidate standard level.

The Department received comments from stakeholders on the loading level appropriate for measuring national energy savings. In particular, NEMA commented that it would be appropriate

to do sensitivity analysis comparisons at different loading levels, but that the primary economic analyses on which a standard is based should be done using the TP 1 load levels of 35 percent and 50 percent. NEMA noted that it may also be appropriate to calculate national energy savings based on lower loading. NEMA stated that it does not think it is prudent to base standards on lower load levels. NEMA went on to say that many large transformers are used to supply power for continuous, 24-hour industrial processes that have high load factors. Examples of these applications are chemical companies, oil refineries, steel mills, grain refineries, and copper and aluminum manufacturers. NEMA stated that any analysis that establishes standards based on lower load factors will unduly penalize these industries, and not result in actual maximum energy savings. (NEMA, No. 7 at p. 10)

Howard Industries, Inc. noted that since utilities will be forced to adopt the DOE rule, they will likely drop the TOC approach of evaluating distribution transformers with the result that often they may end up buying less efficient transformers. However, in other cases, to meet the threshold efficiency of the rule, utilities may have to pay more for their transformers even though they are not economically justified, and therefore the DOE rule will not be good for the environment because more energy will be needed to supply these increased losses. Howard Industries argued that these points should be taken into consideration when the DOE makes its new NES analysis. (Howard Industries, No. 4 at p. 2)

The Department has taken these comments into consideration in the NES calculations, which use loading, costs, and losses as inputs from the LCC analysis. (TSD Chapter 8)

Table II.28 summarizes the various inputs and sources of the distribution transformer NES calculations.

TABLE II.28.—SUMMARY OF INPUTS FOR NES CALCULATIONS

Input	Description
Size scaling of losses and costs	The "0.75 rule" applied to the losses and costs from the LCC analysis.
Mapping of design lines to product classes	Table II.5 shows the mapping of the 13 engineering design lines to the 10 product classes.
Root mean square loading	From the LCC analysis.
Annual Load growth	1% for the liquid-immersed and 0% for the dry-type transformers.
Effective date of standard	Three years after publication of the Final Rule.
Unit energy consumption	Based on losses and RMS loading and the load growth.
Site-to-source electricity conversion	A time series conversion factor; includes electric generation, transmission, and distribution losses. Conversion varies yearly and is generated by the NEMS program.
Affected transformers	From the shipments model.

To determine product class characteristics from design line estimates, the Department first scaled characteristics by transformer capacity to determine per kVA characteristics. Then the Department calculated shipment-weighted averages of per kVA characteristics of the appropriate design lines to get the per kVA characteristics of the product classes. The Department's contractor provided the capacity shipped for each design line (and each product class), the LCC analysis provided the economic results for each design, and the 0.75 Scaling Rule provided the re-scaled cost and loss estimates for each size category represented with a given design line. For no-load losses, no more adjustment is needed; but for load losses, the losses at rated load need to be converted to losses at actual loading. The RMS loading is a key factor in estimating load losses at actual loading. Thus, the load losses are particularly sensitive to the RMS loading.

3. Net Present Value Calculation

The Department takes into consideration the national financial impact from the imposition of new energy efficiency standards, which is expressed as the national NPV. The output of the shipments model is combined with energy savings and financial data from the LCC to calculate an annual stream of costs and benefits resulting from candidate distribution transformer energy efficiency standards. This time series is discounted to 2001 and summed, resulting in the national NPV. The Department selected 2001 as the NPV analysis year, for consistency with the year of equipment price data used in the analysis. A different NPV analysis year may be used in the NOPR.

a. Net Present Value Overview

The NPV is the present value of the incremental economic impacts of a candidate standard level. Mathematically, NPV is the present value in a time series of costs and savings occurring in the future. The Department calculated net savings each year as the difference between total operating cost savings (both energy and electricity system capacity) and increases in total installed costs (including equipment price and installation cost). Electricity system capacity costs include generation, transmission and distribution. Savings were calculated over the life of the equipment, which takes into account the differences in yearly energy rates. The Department calculated the NPV as the difference between the present value of operating cost savings and the present value of increased total installed costs. It discounted purchases and expenses and operating costs for transformers using national average discount factors, which the Department calculated from the discount rate and the number of years between 2001 (the year to which DOE discounted the sum) and the year in which the costs and savings occur. An NPV greater than zero indicates net savings (*i.e.*, the energy efficiency standard reduces customer expenditures in the standards case relative to the base case). An NPV less than zero indicates that the energy efficiency standard creates net costs to consumers.

The following section outlines the inputs specific to the NPV calculation. The Department welcomes suggestions from stakeholders for improving these.

b. Net Present Value Inputs

The NPV model inputs include cost inputs, selected inputs that are important for detailing electricity capacity costs, and several of the inputs used for the NES calculation. This section presents those inputs that have not yet been described as part of the shipments and NES models. Table II.29 summarizes these inputs.

TABLE II.29.—SUMMARY OF INPUTS FOR NPV CALCULATIONS

Input	Description
First cost (installed)	All of the initial costs that are incurred with the installation of a transformer.
Operating cost	Annual cost of operating a transformer including both energy and capacity costs for supplying no-load and load losses.
Peak responsibility factor (PRF)	The square of the ratio of the transformer load during peak divided by the annual peak transformer load. PRF is used to calculate the load loss peak coincidence factor for system capacity cost and demand cost estimates.
Initial peak load	The peak load of the transformer at the time of installation.
Electricity price forecast scalar	The ratio that scales the forecasted increase or decrease in electricity price over the period from 2001 to 2070.
Marginal electricity costs	The cost for the last kWh of electricity purchased.
Discount rates	The time value of money used by the Department to estimate the present value of a future monetary cost or benefit, 3% and 7% real.

The Department received several comments from stakeholders on the appropriate discount rate to use in the NPV calculation. Cooper Power Systems noted that another concern is the uncertainty regarding the appropriate interest rate to select for the present value evaluations. If the rate is skewed too high, lower efficiency units will be evaluated more favorably and vice versa. Cooper stated that a value as high as 35 percent cannot be justified today. Cooper stated that they would like to see how the interest rates are to be chosen. (Cooper Power Systems, No. 34 at p. 1)

NEMA commented that a discount rate representative of real world commercial and industrial business choices should be used. NEMA believes that the 8 percent real as suggested at the Department's framework document workshop is the minimum rate that should be considered. NEMA believes more appropriate discount rates would be in the range of 15 to 20 percent real. (NEMA, No. 7 at p. 11)

The Department estimated national impacts with both a 3 percent and a 7 percent real discount rate in accordance with the Office of Management and Budget's (OMB) guidelines contained in Circular A–4, Regulatory Analysis, September 17, 2003 (see Chapter 10 of the TSD).

4. National Energy Savings and Net Present Value Results

The following seven tables (Tables II.30 through II.36) present the findings from the Department's national impacts analysis. For each evaluated product class and each candidate standard level, the Department presents the NES in quads and the NPV in billions of dollars. Table II.30 provides a summary of the total analysis, grouping together all the liquid-immersed product classes and all the dry-type product classes. Tables II.31 and II.34 provide NPV results for liquid-immersed and dry-type product classes respectively using a 3 percent real discount rate. Tables II.32 and II.35 provide NPV results for the same product classes, using the 7 percent real discount rate. The Department presents all these findings to facilitate stakeholder review of the national impact analysis. The Department has not selected any specific standard level for any product class. A more comprehensive report of the national impact analysis findings is provided in Chapter 10 of the TSD.

a. National Energy Savings and Net Present Value From Candidate Standard Levels

Preliminary NES and NPV results from the NES spreadsheet model for CSL 1 through CSL 5 are shown in Table II.30. Tables II.31 through II.33 present NPV and NES results for liquid-immersed transformers by product class. Tables II.34 through II.36 present NPV and NES results for dry-type transformers by product class. The NPV results are reported using both a 3 percent and a 7 percent real discount rate. The NES is reported in quads, representing a quadrillion (10^{15}) Btus of avoided primary energy consumption at the power plant.

TABLE II.30.—SUMMARY OF CUMULATIVE NES AND NPV IMPACTS BETWEEN 2007–2035

Distribution transformers	Analysis	Candidate standard level				
		CSL 1	CSL 2	CSL 3	CSL 4	CSL 5
Liquid-immmersed	NES (quads)	1.88	3.02	5.20	6.98	7.87
	NPV (billion 2001$, 3%)	6.50	8.32	6.45	5.16	−0.71
	NPV (billion 2001$, 7%)	1.67	1.51	−1.21	−3.18	−7.37
Dry-type	NES (quads)	4.98	5.75	6.71	7.46	8.18
	NPV (billion 2001$, 3%)	32.83	37.24	41.95	43.80	44.45
	NPV (billion 2001$, 7%)	10.09	11.27	12.39	12.26	11.41

TABLE II.31.—NET PRESENT VALUE BETWEEN 2007–2035: LIQUID-IMMERSED PRODUCT CLASSES, 3% REAL DISCOUNT RATE

Product class	Net present value ($ billions)				
	CSL 1	CSL 2	CSL 3	CSL 4	CSL 5
1. Liquid-immersed, medium-voltage, single-phase	3.05	3.21	0.60	−1.05	−6.87
2. Liquid-immersed, medium-voltage, three-phase	3.45	5.11	5.86	6.21	6.17
Total	6.50	8.32	6.45	5.16	−0.71

TABLE II.32.—NET PRESENT VALUE BETWEEN 2007–2035: LIQUID-IMMERSED PRODUCT CLASSES, 7% REAL DISCOUNT RATE

Product class	Net present value ($ billions)				
	CSL 1	CSL 2	CSL 3	CSL 4	CSL 5
1. Liquid-immersed, medium-voltage, single-phase	0.80	0.34	−1.88	−3.77	−7.22
2. Liquid-immersed, medium-voltage, three-phase	0.87	1.17	0.68	0.59	−0.15
Total	1.67	1.51	−1.21	−3.18	−7.37

TABLE II.33.—NATIONAL ENERGY SAVINGS BETWEEN 2007–2035: LIQUID-IMMERSED PRODUCT CLASSES

Product class	Cumulative primary energy savings (quads)				
	CSL 1	CSL 2	CSL 3	CSL 4	CSL 5
1. Liquid-immersed, medium-voltage, single-phase	0.97	1.53	2.70	4.10	4.43
2. Liquid-immersed, medium-voltage, three-phase	0.92	1.48	2.51	2.87	3.44
Total	1.88	3.02	5.20	6.98	7.87

TABLE II.34.—NET PRESENT VALUE BETWEEN 2007–2035: DRY-TYPE PRODUCT CLASSES, 3% REAL DISCOUNT RATE

Product class	Net present value ($ billions)				
	CSL 1	CSL 2	CSL 3	CSL 4	CSL 5
3. Dry-type, low-voltage, single-phase	2.36	2.55	2.61	2.67	2.70
4. Dry-type, low-voltage, three-phase	29.14	32.99	37.07	38.85	39.68
5. Dry-type, medium-voltage, single-phase, 20–45 kV BIL	0.0073	0.0084	0.0099	0.0102	0.0098
6. Dry-type, medium-voltage, three-phase, 20–45 kV BIL	0.32	0.36	0.42	0.42	0.40
7. Dry-type, medium-voltage, single-phase, 46–95 kV BIL	0.0055	0.0070	0.0087	0.0087	0.0084
8. Dry-type, medium-voltage, three-phase, 46–95 kV BIL	0.93	1.24	1.71	1.73	1.63
9. Dry-type, medium-voltage, single-phase, ≥96 kV BIL	0.0008	0.0012	0.0013	0.0016	0.0012
10. Dry-type, medium-voltage, three-phase, ≥96 kV BIL	0.09	0.13	0.14	0.17	0.12
Total	32.83	37.24	41.95	43.80	44.45

TABLE II.35.—NET PRESENT VALUE BETWEEN 2007–2035: DRY-TYPE PRODUCT CLASSES, 7% REAL DISCOUNT RATE

Product class	Net present value ($ billions)				
	CSL 1	CSL 2	CSL 3	CSL 4	CSL 5
3. Dry-type, low-voltage, single-phase	0.71	0.75	0.77	0.75	0.74
4. Dry-type, low-voltage, three-phase	9.03	10.07	11.07	11.04	10.37
5. Dry-type, medium-voltage, single-phase, 20–45 kV BIL	0.0021	0.0023	0.0027	0.0025	0.0021
6. Dry-type, medium-voltage, three-phase, 20–45 kV BIL	0.08	0.09	0.11	0.09	0.07
7. Dry-type, medium-voltage, single-phase, 46–95 kV BIL	0.0019	0.0023	0.0025	0.0021	0.0019
8. Dry-type, medium-voltage, three-phase, 46–95 kV BIL	0.25	0.32	0.41	0.34	0.24
9. Dry-type, medium-voltage, single-phase, ≥96 kV BIL	0.0002	0.0003	0.0003	0.0003	0.0001
10. Dry-type, medium-voltage, three-phase, ≥96 kV BIL	0.02	0.03	0.03	0.04	0.01
Total	10.09	11.27	12.39	12.26	11.41

TABLE II.36.—CUMULATIVE PRIMARY ENERGY SAVINGS BETWEEN 2007–2035: DRY-TYPE PRODUCT CLASSES

Product class	Cumulative primary energy savings (quads)				
	CSL 1	CSL 2	CSL 3	CSL 4	CSL 5
3. Dry-type, low-voltage, single-phase	0.35	0.39	0.39	0.43	0.44
4. Dry-type, low-voltage, three-phase	4.39	5.07	5.87	6.53	7.20
5. Dry-type, medium-voltage, single-phase, 20–45 kV BIL	0.0012	0.0014	0.0017	0.0020	0.0021
6. Dry-type, medium-voltage, three-phase, 20–45 kV BIL	0.05	0.06	0.08	0.09	0.09
7. Dry-type, medium-voltage, single-phase, 46–95 kV BIL	0.0010	0.0012	0.0017	0.0019	0.00221
8. Dry-type, medium-voltage, three-phase, 46–95 kV BIL	0.17	0.21	0.33	0.38	0.41
9. Dry-type, medium-voltage, single-phase, ≥96 kV BIL	0.0001	0.0002	0.0003	0.0003	0.0004
10. Dry-type, medium-voltage, three-phase, ≥96 kV BIL	0.02	0.02	0.03	0.04	0.04
Total	4.98	5.75	6.71	7.46	8.18

I. Life-Cycle Cost Sub-Group Analysis

The LCC sub-group analysis evaluates impacts on identifiable groups of customers, such as customers of different business types, who may be disproportionately affected by any national energy efficiency standard level. The Department intends to analyze the LCC and PBPs for those customers that fall into those identifiable groups.

Also, the Department plans to examine variations in energy prices and variations in energy use that might affect the NPV of a standard to customer sub-populations. To the extent possible, the Department will get estimates of the variability of each input parameter and consider this variability in its calculation of customer impacts. Variations in energy use for a particular equipment type depend on factors such as climate and type of business.

The Department will determine the effect on customer sub-groups using the LCC spreadsheet model. The spreadsheet model used for the LCC analysis can be used with different data inputs. The standard LCC analysis includes various customer types that use distribution transformers. The Department can analyze the LCC for any sub-group, such as rural electric cooperatives, by using the LCC spreadsheet model and sampling only that sub-group. Details of this model are explained in section II.F, describing the LCC and PBP analyses. The Department will be especially sensitive to purchase price increases (''first cost'' increases) to avoid negative impacts on identifiable population groups such as small businesses (*i.e.*, those with low annual revenues), which may not be able to afford a significant increase in the price of distribution transformers.

J. Manufacturer Impact Analysis

The Process Rule, 10 CFR Part 430, Subpart C, Appendix A, provides guidance for conducting a manufacturer impact analysis, and the Department intends to apply this methodology to its evaluation of standards for distribution transformers. The Process Rule gives guidelines for the consideration of financial impacts, as well as a wide range of quantitative and qualitative industry impacts that might occur following the adoption of a standard. For example, a particular standard level, if adopted by DOE, could require changes to distribution transformer manufacturing practices. The Department intends to identify and understand these impacts through interviews with manufacturers and other stakeholders during the NOPR stage of its analysis.

1. Sources of Information for the Manufacturer Impact Analysis

Many of the analyses described above, including manufacturing costs and shipment forecasts, provide important information applicable to the manufacturer impact analysis. The Department's contractor will review and supplement this information through interviews with manufacturers. This interview process plays a key role in the manufacturer impact analysis because it allows interested parties to privately express their views on important issues. To preserve confidentiality, the Department's contractor aggregates these perspectives across manufacturers, creating a combined opinion or estimate for the Department. This process enables the Department to incorporate sensitive information from manufacturers in the rulemaking process, without specifying precisely which manufacturer provided a certain set of data.

The Department conducts interviews with manufacturers to gain insight into the range of potential impacts of standards. Information is solicited specifically on the potential impacts of efficiency levels on sales, direct employment, capital assets, and industrial competitiveness. The Department prefers an interactive interview process because it helps clarify responses and identify additional issues. Before the interviews, the Department will circulate a draft document showing the estimates of the financial parameters based on publicly available information. The Department will solicit comments and suggestions on these estimates during the interviews.

The Department's contractor will ask interview participants to notify it, either in writing or orally, of any confidential materials. The Department will consider all relevant information in its decision-making process. However, DOE will not make confidential information available in the public record. The Department also will ask participants to identify all information that they wish to have included in the public record and whether they want it to be presented with or without attribution.

The Department's contractors will collate the completed interview questionnaires and prepare a summary of the major issues.

2. Industry Cash Flow Analysis

The industry cash flow analysis relies primarily on the Government Regulatory Impact Model (GRIM). The Department uses GRIM to analyze the financial impacts of more stringent energy efficiency standards on the industry.

The GRIM analysis uses a number of factors to determine annual cash flows from a new standard: Annual expected revenues; manufacturer costs (including cost of goods, capital depreciation, research and development, selling, and general administrative costs); taxes; and conversion expenditures. The Department compares the results against base case projections that involve no new standards. The financial impact of new standards is the difference between the two sets of discounted annual cash flows. Other performance metrics, such as return on invested capital, also are available from GRIM.

3. Manufacturer Sub-Group Analysis

Industry cost estimates are not adequate to assess differential impacts among sub-groups of manufacturers. Small and niche manufacturers, or manufacturers exhibiting a cost structure that differs largely from the industry average could experience a greater negative impact. The Department typically uses the results of the industry characterization to group manufacturers exhibiting similar characteristics.

During the manufacturer interview process, the Department's contractor will discuss the potential sub-groups and sub-group members that DOE has identified for the analysis. The contractor will encourage the manufacturers to recommend sub-groups or characteristics that are appropriate for the manufacturer sub-group analysis.

4. Competitive Impacts Assessment

The Department also takes into consideration whether a new standard is likely to reduce industry competition and the Attorney General determines the impacts, if any, of any reduced competition. The Department's contractors will make a determined effort to gather firm-specific financial information and impacts. The competitive analysis will focus on assessing the impacts to smaller, yet significant, manufacturers. The Department will base the assessment on manufacturing cost data and on information collected from interviews with manufacturers, which will focus on gathering information to help assess asymmetrical cost increases to some manufacturers, increased proportions of fixed costs that could potentially increase business risks, and potential barriers to market entry (*e.g.*, proprietary technologies).

5. Cumulative Regulatory Burden

The Department will recognize and seek to mitigate the overlapping effects on manufacturers of new or revised DOE standards and other regulatory actions affecting the same products. DOE will analyze and consider the impact on manufacturers of multiple product-specific regulatory actions. These factors will be considered in setting rulemaking priorities, assessing manufacturers impacts of a particular standard, and establishing the effective date for a new or revised standard. In particular, DOE will seek to propose effective dates for new or revised standards that are appropriately coordinated with other regulatory actions to mitigate any cumulative burden.

K. Utility Impact Analysis

The Department intends to determine whether a proposed standard will achieve the maximum improvement in energy efficiency or the maximum reduction in energy use that is technologically feasible and economically justified. To determine whether economic justification exists, the Department will review comments on the proposal and determine that the benefits of the proposed standard exceed its burdens to the greatest extent practicable, weighing several factors. (42 U.S.C. 6295 (o)(2)(B)) To estimate the effects of proposed distribution transformer standard levels on the electric utility industry, the Department intends to use a variant of EIA's NEMS.[4] EIA used NEMS to produce its Annual Energy Outlook (*AEO*). The Department will use a variant known as NEMS–BT to provide key inputs to the analysis, as well as some exogenous calculations. The utility impact analysis is a comparison between model results for the base case and policy cases in which proposed standards are in place. The analysis will consist of forecasted differences between the base case and standards cases for electricity generation, installed capacity, sales, and prices.

The use of NEMS for the utility impact analysis offers several advantages. As the official DOE energy forecasting model, it relies upon a set of assumptions that are transparent and have received wide exposure and commentary. NEMS allows an estimate of the interactions between the various energy supply and demand sectors and the economy as a whole. The utility impact analysis will determine the changes in installed capacity and generation by fuel type produced by each candidate standard level, as well as changes in electricity sales to the commercial sector.

The Department will conduct the utility impact analysis as a variant of *AEO 2003*, with the same basic set of assumptions applied. For example, the operating characteristics (energy conversion efficiency, emissions rates, *etc.*) of future electricity generating plants are as specified in the *AEO 2003* reference case, as are the prospects for natural gas supply.

The Department will also explore deviations from some of the reference case assumptions to represent alternative futures. Two alternative scenarios use the high- and low-economic-growth cases of *AEO 2003* (the reference case corresponds to medium growth). The high-economic-growth case assumes higher projected growth rates for population, labor force, and labor productivity, resulting in lower predicted inflation and interest rates relative to the reference case. The opposite is true for the low-growth case. While the Department varies supply-side growth determinants in these cases, *AEO 2003* assumes the same reference case energy prices for all three economic growth cases. Different economic growth scenarios will affect the rate of growth of electricity demand.

The Department will generate transformer load shapes for use in NEMS using LCC and NES results. The Department will then use NEMS to predict growth in demand to build up a projection of the total electric system load growth for each region. The Department will use the projection to predict the necessary additions to capacity. The Department will implement the accounting of efficiency standards in NEMS–BT by decrementing the appropriate reference case load shape. The Department will determine the size of the decrement using data for the per-unit energy savings developed in the LCC and PBP analyses and the shipments forecast developed for the NES analysis.

Since the *AEO 2003* version of NEMS forecasts only to the year 2025, the Department must extrapolate results to 2035. The Department will use EIA's approach for forecasting fuel prices for the Federal Energy Management Program (FEMP) for Federal sector energy prices. FEMP uses these prices to estimate life-cycle costs of Federal equipment procurements. For petroleum products, the Department will determine regional price forecasts to 2035 from the average growth rate for world oil prices over the years 2010 to 2025 used in combination with refinery and distribution markups from the year 2025. Similarly, the Department will derive natural gas prices to 2035 from an average growth rate figure in combination with regional prices from the year 2025.

L. Employment Impact Analysis

DOE's Process Rule, 10 CFR Part 430, Subpart C, Appendix A, provides guidance for consideration of the impact of candidate standard levels on employment, both direct and indirect. The Process Rule states a general presumption against any proposed standard level that would cause significant plant closures or losses of domestic employment, unless specifically identified expected benefits of the standard would outweigh the adverse effects.

The Department estimates the impacts of standards on employment for equipment manufacturers, relevant service industries, energy suppliers, and the economy in general. Both indirect and direct employment impacts are covered. Direct employment impacts would result if standards led to a change in the number of employees at manufacturing plants and related supply and service firms. Direct impact estimates are covered in the manufacturer impact analysis.

Indirect impacts are impacts on the national economy other than in the manufacturing sector being regulated. Indirect impacts may result both from expenditures shifting among goods (substitution effect) and changes in income which lead to a change in overall expenditure levels (income effect). The Department defines indirect employment impacts from standards as net jobs eliminated or created in the general economy as a result of increased spending driven by the increased price of equipment and reduced expenditures on energy.

The Department expects new distribution transformer standards to increase the total installed cost of equipment (customer purchase price plus sales tax, and installation). It expects the new standards to decrease energy consumption, and thus expenditures on energy. Over time, the increased total installed cost is paid back through energy savings. The

[4] For more information on NEMS, please refer to the U.S. Department of Energy, Energy Information Administration documentation. A useful summary is *National Energy Modeling System: An Overview 2000*, DOE/EIA–0581(2000), March, 2000. The Department/EIA approves use of the name NEMS to describe only an official version of the model without any modification to code or data. Because this analysis entails some minor code modifications and the model is run under various policy scenarios that are variations of DOE/EIA assumptions, in this analysis the Department refers to it by the name NEMS–BT (BT is DOE's Building Technologies Program, under whose aegis this work is performed).

savings in energy expenditures may be spent on new commercial investment and other items. Using an input/output model of the U.S. economy, this analysis seeks to estimate the effects on different sectors and the net impact on jobs. The Department will estimate national impacts for major sectors of the U.S. economy in the NOPR. Public and commercially available data sources and software will be used to estimate employment impacts. The Department will make all methods and documentation available for review.

For recent energy efficiency standards rulemakings, the Department has used the Impact of Building Energy Efficiency Programs (IMBUILD) spreadsheet model to analyze indirect employment impacts. The Department's Building Technologies Program office developed IMBUILD, which is a special purpose version of the Impact Analysis for Planning (IMPLAN) national input-output model. IMPLAN specifically estimates the employment and income effects of building energy technologies. The IMBUILD model is an economic analysis system that focuses on those sectors most relevant to buildings and characterizes the interconnections among 35 sectors as national input-output matrices using data from the Bureau of Labor Statistics. The IMBUILD output includes employment, industry output, and wage income. Changes in expenditures due to commercial and industrial equipment standards can be introduced to IMBUILD as perturbations to existing economic flows and the resulting net national impact on jobs by sector can be estimated.

Although the Department intends to use IMBUILD for its analysis of employment impacts, it welcomes any input on tools and factors to be considered.

M. Environmental Assessment

As with the utility impact analysis, the Department will assess the impacts of proposed distribution transformer standard levels on certain environmental indicators using NEMS–BT to provide key inputs to the analysis, as well as some exogenous calculations. The environmental assessment produces results in a manner similar to those provided in *AEO 2003*.

The intent of the environmental assessment is to provide emissions results estimates, and to fulfill requirements to properly quantify and consider the environmental effects of all new Federal rules. The environmental assessment that will be produced by NEMS–BT considers only two pollutants, sulfur dioxide (SO_2) and nitrogen oxides (NO_X), and one other emission, carbon. The only form of carbon the NEMS–BT model tracks is carbon dioxide (CO_2), so the carbon discussed in this analysis is only in the form of CO_2. For each of the trial standard levels, DOE will calculate total undiscounted and discounted emissions using NEMS–BT and will use external analysis as needed.

The Department will conduct the environmental assessment as an incremental policy impact (*i.e.*, a transformer standard) of the *AEO 2003* forecast, with the same basic set of assumptions applied. For example, the emissions characteristics of an electricity generating plant will be exactly those used in *AEO 2003*. Also, forecasts conducted with NEMS–BT take into consideration the supply-side and demand-side effects on the electric utility industry. Thus, the Department's analysis will take into account any factors impacting the type of electricity generation and, in turn, the type and amount of utility-industry-generated air-borne emissions.

The NEMS–BT model tracks carbon emissions with a specialized carbon emissions estimation subroutine, producing reasonably accurate results due to the broad coverage of all sectors and inclusion of interactive effects. Past experience with carbon results from NEMS suggests that emissions estimates are somewhat lower than emissions based on simple average factors. One of the reasons for this divergence is that NEMS tends to predict that conservation displaces generating capacity in future years. On the whole, NEMS–BT provides carbon emissions results of reasonable accuracy, at a level consistent with other Federal published results.

NEMS–BT also reports SO_2 and NO_X which the Department has reported in past analyses. The Clean Air Act Amendments of 1990 set an SO_2 emissions cap on all power generation. The attainment of this target, however, is flexible among generators through the use of emissions allowances and tradeable permits. NEMS includes a module for SO_2 allowance trading and delivers a forecast of SO_2 allowance prices. Accurate simulation of SO_2 trading implies that physical emissions effects will be zero, as long as emissions are at the ceiling. This fact has caused considerable confusion in the past. However, there is an SO_2 benefit from conservation in the form of a lower allowance price as a result of additional allowances from this rule, and, if large enough to be calculable by NEMS–BT, the Department will report it. NEMS also has an algorithm for estimating NO_X emissions from power generation. Two recent regulatory actions proposed by the EPA regarding regulations and guidelines for best available retrofit technology determinations and the reduction of interstate transport of fine particulate matter and ozone are tending towards further NO_X reductions and likely to an eventual emissions cap on nation-wide NO_X. 69 FR 25184 (May 5, 2004) and 69 FR 32684 (June 10, 2004). As with SO_2 emissions, a cap on NO_X emissions will likely result in no physical emissions effects from equipment efficiency standards.

The reporting of the results for the environmental assessment are similar to a complete NEMS run as published in the *AEO 2003*. These results include power sector emissions for SO_2, NO_X, and carbon, and SO_2 prices in five-year forecasted increments extrapolated to the year 2035. The outcome of the analysis for each candidate standard level is reported as a deviation from the *AEO 2003* reference (base) case.

N. Regulatory Impact Analysis

The Department will prepare a draft regulatory impact analysis in compliance with Executive Order 12866, ''Regulatory Planning and Review,'' which will be subject to review by the Office of Management and Budget's Office of Information and Regulatory Affairs (OIRA). 58 FR 51735.

As part of the regulatory impact analysis, the Department will identify and seek to mitigate the overlapping effects on manufacturers of new or revised DOE standards and other regulatory actions affecting the same equipment. Through manufacturer interviews and literature searches, the Department will compile information on burdens from existing and impending regulations affecting distribution transformers. The Department also seeks input from stakeholders regarding regulations that it should consider.

The NOPR will include a complete quantitative analysis of alternatives to the proposed conservation standards. The Department plans to use the NES spreadsheet model (as discussed in section II.H on the national impact analysis) to calculate the NES and NPV corresponding to specified alternatives to the proposed conservation standards.

III. Proposed Standards Scenarios

The Process Rule, 10 CFR Part 430, Subpart C, Appendix A, gives guidance to the Department to specify candidate standards levels in the ANOPR, but not to propose a particular standard. The Department intends to review the public input received during the comment period following the ANOPR public

meeting and update the analyses appropriately for each product class before issuing the NOPR.

The Department seeks comments on whether standards that meet alternative scenarios would provide energy savings to the Nation comparable to the savings that would be obtained by the highest standards that are technologically feasible and economically justified, effective in 2007, or the final date to be determined in the NOPR analysis. The Department may consider standards that meet the following alternative scenarios, for example:

- A moderate increase in the efficiency level at an earlier effective date, for example, an effective date two years after the publication of the Final Rule.
- A larger increase in efficiency level at a later effective date.
- A two-phase approach combining the two scenarios, for example, a moderate increase in efficiency level for some product classes effective at an earlier date and an even higher efficiency level effective at a later date.

IV. Public Participation

A. Attendance at Public Meeting

The time and date of the public meeting are listed in the **DATES** section at the beginning of this notice of proposed rulemaking. Anyone who wants to attend the public meeting must notify Ms. Brenda Edwards-Jones at (202) 586–2945. Foreign nationals visiting DOE Headquarters are subject to advance security screening procedures, requiring a 30-day advance notice. A foreign national who wishes to participate in the meeting must tell DOE of this fact as soon as possible by contacting Ms. Brenda Edwards-Jones to initiate the necessary procedures.

B. Procedure for Submitting Requests To Speak

Any person who has an interest in today's notice, or who is a representative of a group or class of persons that has an interest in these issues, may request an opportunity to make an oral presentation. Please hand-deliver requests to speak, along with a computer diskette or CD in WordPerfect, Microsoft Word, PDF, or text (ASCII) file format to the address shown at the beginning of this advance notice of proposed rulemaking between the hours of 9 a.m. and 4 p.m., Monday through Friday, except Federal holidays. Requests may also be sent by mail or e-mail to: *Brenda.Edwards-Jones@ee.doe.gov.*

Persons requesting to speak should briefly describe the nature of their interest in this rulemaking and provide a telephone number for contact. The Department requests persons selected to be heard to submit an advance copy of their statements at least two weeks before the public meeting. At its discretion, DOE may permit any person who cannot supply an advance copy of his or her statement to participate, if that person has made advance alternative arrangements with the Building Technologies Program. The request to give an oral presentation should ask for such alternative arrangements.

C. Conduct of Public Meeting

The Department will designate a DOE official to preside at the public meeting and may also use a professional facilitator to aid discussion. The meeting will not be a judicial or evidentiary-type public hearing, but DOE will conduct it in accordance with 5 U.S.C. 553 and section 336 of EPCA. (42 U.S.C. 6306) A court reporter will be present to record the transcript of the proceedings. The Department reserves the right to schedule the order of presentations and to establish the procedures governing the conduct of the public meeting. After the public meeting, interested parties may submit further comments on the proceedings as well as on any aspect of the rulemaking until the end of the comment period.

The public meeting will be conducted in an informal, conference style. The Department will present summaries of comments received before the public meeting, allow time for presentations by participants, and encourage all interested parties to share their views on issues affecting this rulemaking. Each participant will be allowed to make a prepared general statement (within time limits determined by DOE) before the discussion of specific topics. The Department will permit other participants to comment briefly on any general statements.

At the end of all prepared statements on a topic, DOE will permit participants to clarify their statements briefly and comment on statements made by others. Participants should be prepared to answer questions by DOE and by other participants concerning these issues. Department representatives may also ask questions of participants concerning other matters relevant to the public meeting. The official conducting the public meeting will accept additional comments or questions from those attending, as time permits. The presiding official will announce any further procedural rules or modification of the above procedures that may be needed for the proper conduct of the public meeting.

The Department will make the entire record of this proposed rulemaking, including the transcript from the public meeting, available for inspection at the U.S. Department of Energy, Forrestal Building, Room 1J–018 (Resource Room of the Building Technologies Program), 1000 Independence Avenue, SW., Washington, DC, (202) 586–9127, between 9 a.m. and 4 p.m., Monday through Friday, except Federal holidays. Any person may buy a copy of the transcript from the transcribing reporter.

D. Submission of Comments

The Department will accept comments, data, and information regarding all aspects of this ANOPR before or after the public meeting, but no later than the date provided at the beginning of this advance notice of proposed rulemaking. Please submit comments, data, and information electronically. Send them to the following E-mail address: *Transformer ANOPRComment@ee.doe.gov*. Submit electronic comments in WordPerfect, Microsoft Word, PDF, or text (ASCII) file format and avoid the use of special characters or any form of encryption. Comments in electronic format should be identified by the docket number EE–RM/STD–00–550, and wherever possible carry the electronic signature of the author. Absent an electronic signature, comments submitted electronically must be followed and authenticated by submitting the signed original paper document. No telefacsimiles (faxes) will be accepted.

Pursuant to 10 CFR 1004.11, any person submitting information that he or she believes to be confidential and exempt by law from public disclosure should submit two copies: one copy of the document including all the information believed to be confidential, and one copy of the document with the information believed to be confidential deleted. The Department of Energy will make its own determination about the confidential status of the information and treat it according to its determination.

Factors of interest to the Department when evaluating requests to treat submitted information as confidential include: (1) A description of the items; (2) whether and why such items are customarily treated as confidential within the industry; (3) whether the information is generally known by, or available from, other sources; (4) whether the information has previously been made available to others without obligation concerning its confidentiality; (5) an explanation of the

competitive injury to the submitting person which would result from public disclosure; (6) when such information might lose its confidential character due to the passage of time; and (7) why disclosure of the information would be contrary to the public interest.

E. Issues on Which DOE Seeks Comment

The Department is interested in receiving comments on all aspects of this ANOPR. DOE especially invites comments or data to improve the Departments' analysis, including data or information that will respond to the following questions or concerns that were addressed in this ANOPR:

1. Definition and Coverage

The Department seeks to clarify coverage under this proposed activity. This ANOPR proposes a definition that more closely parallels NEMA's TP 1, outlining a broad scope of coverage and then identifying exemptions. The Department invites stakeholders to comment on the new distribution transformer definition, including the revised scope, the exemptions list, and the exemptions list definitions (see section II.A for details).

2. Product Classes

The Department proposes product classes that are in keeping with those in NEMA's TP 1–2002 document, specifically by breaking down the population of distribution transformers by type of insulation (liquid-immersed or dry-type), number of phases (single or three), voltage (low or medium), and BIL rating (for medium-voltage dry-types). The Department is proposing a greater degree of specificity by BIL rating than that provided in NEMA's TP 1–2002 document. The Department requests feedback from stakeholders on its BIL classification system for medium-voltage, dry-type transformers (see section II.A for details).

3. Engineering Analysis Inputs

In Chapter 5 of the TSD, the Department presents all the costs of material used as design inputs to the modeling software. The Department asks that stakeholders, particularly manufacturers, review the material prices and comment on whether they represent reasonable input costs for the engineering analysis.

4. Design Option Combinations

For each representative unit analyzed, the Department selected several methods of construction, by varying core steels and winding material. These combinations represent the most common types of transformers made, as well as the lowest first-cost and the maximum technologically feasible design. The complete breakdown of the design option combinations is presented in Chapter 5 of the TSD. The Department requests that stakeholders review these design option combinations and comment on whether they are the best ones to use for a given representative unit. Also, the Department requests comments on the screening analysis, regarding both technologies and materials that were included and those screened out from further consideration. (See section II.B for details.)

5. The 0.75 Scaling Rule

The Department applied a 0.75 power law scaling rule to two key components of the transformer efficiency analysis:

(a) In simplifying the engineering analysis by taking 115 different kVA ratings and turning them into 13 engineering design lines with 13 representative units, the Department committed to using the 0.75 scaling rule to scale losses from the representative unit to other kVA ratings within a design line. The Department requests comments on this practice, discussed in section II.C.2 and outlined in Chapter 5 of the TSD.

(b) To simplify the economic analysis, the Department extrapolated economic costs and benefits for a particular design line to each of the kVA ratings using the 0.75 rule. Not all economic costs and benefits of transformer efficiency scale according to the 0.75 rule, although the rule may be a reasonable approximation for ranges of kVA ratings. The Department requests comment on the desirability of having a simple scaling for transformer efficiency economics versus using more detailed scaling methods that may result in a more complicated relationship between kVA rating and efficiency level.

6. Modeling of Transformer Load Profiles

Lacking sufficient empirical transformer loading data, the Department developed models of transformer loads specific to each type of transformer. The Department requests comments on the methods it employed as well as sources of specific loading data that it could use in the NOPR analyses. (See section II.F for details.)

7. Distribution Chain Markups

The Department used cost data from RS Means combined with manufacturer price estimates and U.S. economic census data to estimate markups and installation costs for transformers from the factory door through completed installation. The Department requests stakeholder feedback on markup factors, methods, and data used by the Department. (See section II.E for details.)

8. Discount Rate Selection and Use

The Department used a weighted average cost of capital as the discount rate for the LCC and the OMB-mandated discounted rates for the NPV calculation. The Department requests stakeholder feedback on the appropriateness of these discount rates. (See sections II.F and II.H for details.)

9. Baseline Determination Through Purchase Evaluation Formulae

The Department characterized current market conditions for both liquid-immersed and dry-type transformers using a distribution of load and no-load loss values, and assumed percentages of customers that evaluate their transformer purchases by considering the value of load and no-load losses. The Department invites further comment on the purchase decision model and transformer evaluation behavior for both liquid-immersed and dry-type transformers, especially:

- Actual A and B values used in the current market,
- Actual efficiency of the low first-cost designs currently on the market since the efficiency of the low first-cost designs has a large impact on overall energy savings estimates,
- Applicability of the approach to characterize both medium- and low-voltage, dry-type transformer market behavior, and
- The stability over time of the transformer market, especially the percent of evaluators and levels of A and B values.

(See section II.F for details.)

10. Electricity Prices

The Department requests stakeholder feedback on the two methods it used for this rulemaking to determine the cost of electricity consumed by transformers. For dry-type transformers used predominately by commercial and industrial firms, the Department calculated estimated bills based on a sample of electricity tariffs. For liquid-immersed transformers, the Department used market and FERC Form 714 data to estimate the marginal cost of electricity to utilities. (See section II.F for details.)

11. Load Growth Over Time

Since the Department lacks specific information on transformer load growth over time, it assumed for its default ANOPR scenario a 1-percent annual growth rate for liquid-immersed

transformers and zero-percent load growth for dry-type transformers. The Department requests stakeholders comments on these assumptions. (See section II.F for details.)

12. Life-Cycle Cost Sub-Groups

The Department has identified various categories of utilities, such as municipal utilities and rural electric cooperatives, as possible sub-groups for which to conduct a separate LCC analysis. The Department seeks stakeholder feedback regarding the most appropriate sub-groups to include in the NOPR analysis. (See section II.I for details.)

13. Utility Deregulation Impacts

The Department is aware of ongoing wholesale and retail deregulation activities in the electric utility industry, but is uncertain how this deregulation will affect transformer purchase decisions in the long term. The Department requests comments from stakeholders with specific information regarding the impact of deregulation. Utility deregulation will likely have the most significant impacts on LCC results, through changes in electricity prices. LCC Details are found in TSD Chapter 8.

V. Regulatory Review and Procedural Requirements

This advance notice of proposed rulemaking was submitted for review to OIRA in the Office of Management and Budget under Executive Order 12866, ''Regulatory Planning and Review.'' 58 FR 51735. If DOE later proposes energy conservation standards for certain distribution transformers, the rulemaking would likely constitute a significant regulatory action, and DOE would prepare and submit to OIRA for review the assessment of costs and benefits required by section 6(a)(3) of the Executive Order. In addition, various other analyses and procedures may apply to such future rulemaking action, including those required by the National Environmental Policy Act, 42 U.S.C. 4321 *et seq.*; the Unfunded Mandates Act of 1995, Pub. L. 104–4; the Paperwork Reduction Act, 44 U.S.C. 3501 *et seq.*; the Regulatory Flexibility Act, 5 U.S.C. 601 *et seq.*; and certain Executive Orders.

VI. Approval of the Office of the Secretary

The Secretary of Energy has approved publication of today's Advance Notice of Proposed Rulemaking.

Issued in Washington, DC, on July 13, 2004.

David K. Garman,

Assistant Secretary, Energy Efficiency and Renewable Energy.

[FR Doc. 04–16573 Filed 7–28–04; 8:45 am]

BILLING CODE 6450–01–P

Federal Register

Thursday,
July 29, 2004

Part III

Department of Energy

Office of Energy Efficiency and Renewable Energy

10 CFR Part 430

Energy Conservation Program for Consumer Products: Energy Conservation Standards for Residential Furnaces and Boilers; Proposed Rule

DEPARTMENT OF ENERGY

Office of Energy Efficiency and Renewable Energy

10 CFR Part 430

[Docket No. EE–RM/STD–01–350]

RIN 1904–AA78

Energy Conservation Program for Consumer Products: Energy Conservation Standards for Residential Furnaces and Boilers

AGENCY: Office of Energy Efficiency and Renewable Energy, Department of Energy.

ACTION: Advance notice of proposed rulemaking, public meeting and webcast.

SUMMARY: The Energy Policy and Conservation Act (EPCA or the Act) authorizes the Department of Energy (DOE or the Department) to establish energy conservation standards for various consumer products and commercial and industrial equipment, including residential furnaces and boilers, if DOE determines that energy conservation standards would be technologically feasible and economically justified, and would result in significant energy savings. The Department publishes this Advance Notice of Proposed Rulemaking (ANOPR) to consider establishing energy conservation standards for residential furnaces and boilers and to announce a public meeting to receive comments on a variety of issues.

DATES: The Department will hold a webcast on Tuesday, August 17, 2004 from 1 p.m. to 4 p.m. If you are interested in participating in this event, please inform Mohammed Khan at (202) 586–7892.

The Department will hold a public meeting on Wednesday, September 29, 2004, starting at 9 a.m., in Washington, DC. The Department must receive requests to speak at the meeting before 4 p.m., Wednesday, September 15, 2004. The Department must receive a signed original and an electronic copy of statements to be given at the public meeting no later than 4 p.m. Wednesday, September 22, 2004.

The Department will accept comments, data, and information regarding the ANOPR before or after the public meeting, but no later than Wednesday, November 10, 2004. See section IV, ''Public Participation,'' of this ANOPR for details.

ADDRESSES: The public meeting will be held at the Ronald Reagan Building and International Trade Center, Polaris Room, 1300 Pennsylvania Avenue, NW., Washington, DC 20004. A photo ID is required to enter the building.

You may submit comments, identified by docket number EE–RM/STD–01–350 and/or RIN number 1904–AA78, by any of the following methods:

- Federal eRulemaking Portal: *http://www.regulations.gov.* Follow the instructions for submitting comments.
- E-mail: *ResidentialFBANOPR Comments@ee.doe.gov.* Include EE–RM/STD–01–350 and/or RIN number 1904–AA78 in the subject line of the message.
- Mail: Ms. Brenda Edwards-Jones, U.S. Department of Energy, Building Technologies Program, Mailstop EE–2J, ANOPR for Residential Furnaces and Boilers, docket number EE–RM/STD–01–350 and/or RIN number 1904–AA78, 1000 Independence Avenue, SW., Washington, DC 20585–0121. Please submit one signed original paper copy.
- Hand Delivery/Courier: Ms. Brenda Edwards-Jones, U.S. Department of Energy, Building Technologies Program, Room 1J–018, 1000 Independence Avenue, SW., Washington, DC 20585.

Instructions: All submissions received must include the agency name and docket number or Regulatory Information Number (RIN) for this rulemaking. For detailed instructions on submitting comments and additional information on the rulemaking process, see section IV of this document (Public Participation).

Docket: For access to the docket to read background documents or comments received, go to the U.S. Department of Energy, Forrestal Building, Room 1J–018 (Resource Room of the Building Technologies Program), 1000 Independence Avenue, SW., Washington, DC, (202) 586–9127, between 9 a.m. and 4 p.m., Monday through Friday, except Federal holidays. Please call Ms. Brenda Edwards-Jones at the above telephone number for additional information regarding visiting the Resource Room. Please note: The Department's Freedom of Information Reading Room (Room 1E–190 at the Forrestal Building) is no longer housing rulemaking materials.

FOR FURTHER INFORMATION CONTACT: Mohammed Khan, Project Manager, Energy Conservation Standards for Residential Furnaces and Boilers, Docket No. EE–RM/STD–01–350, EE–2J/Forrestal Building, U.S. Department of Energy, Office of Building Technologies, EE–2J, 1000 Independence Avenue, SW., Washington, DC 20585–0121, (202) 586–7892. E-mail: *Mohammed.Khan commat;ee.doe.gov.*

Thomas B. DePriest, Esq., U.S. Department of Energy, Office of General Counsel, Forrestal Building, Mail Station GC–72, 1000 Independence Avenue, SW., Washington, DC 20585, (202) 586–9507. E-mail: *Thomas.DePriest@hq.doe.gov.*

SUPPLEMENTARY INFORMATION:

I. Introduction
A. Purpose of the ANOPR
B. Summary of the Analysis
1. Engineering Analysis
2. Life-Cycle Cost (LCC) and Payback Period (PBP) Analysis
3. National Impacts Analysis
C. Authority
D. Background
1. History of Standards Rulemaking for Residential Furnaces and Boilers
2. Current Rulemaking Process
3. Miscellaneous Rulemaking Issues
a. Separate Efficiency Standards for Different Regions
b. Separate Efficiency Standards for New Construction and Replacement Markets
c. Treatment of Mobile Home Furnaces
d. Potential Market Share Shifts due to Standards
e. Inclusion of Electric Furnaces in the Rulemaking
f. Transparency of the Analysis
g. Data Used in the Analysis
h. Regulation of Furnace and Boiler Electricity Consumption
4. Test Procedure
II. Residential Furnace and Boiler Analyses
A. Market Assessment and Technology Assessment
1. Definition of Product Classes
B. Screening Analysis
C. Engineering Analysis
1. Approach
2. Baseline Models
3. Design Option Selection
4. Manufacturing Cost Analysis
5. Markup Analysis
6. Installation Cost
a. Non-Weatherized Gas Furnaces
b. Other Product Classes
c. Safety and Reliability Issues Related to Installation
7. Maintenance Costs
8. Summary of Inputs
9. Rebuttable Payback Periods
D. Life-Cycle Cost (LCC) and Payback Period (PBP) Analysis
1. Approach
2. First-Cost Inputs
a. Equipment Prices
b. Installation Costs
3. Operating-Cost Inputs
a. Annual Energy Use
b. Energy Prices
c. Maintenance Costs
4. Equipment Lifetime
5. Discount Rate
6. Effective Date
7. Inputs to Payback Period Analysis
8. Summary of Inputs
9. LCC and PBP Results
E. National Impact Analysis
1. Approach
2. Inputs
a. Shipments
i. Replacement and Conversions
ii. Shipments to New Housing
iii. Total Projected Shipments

b. Annual Unit Energy Consumption
c. Site-to-Source Conversion Factors
d. Installed Equipment Costs
e. Energy Prices
f. Discount Rate
g. Summary of Inputs
3. National Impact Analysis Results
F. Life-Cycle Cost (LCC) Sub-group Analysis
G. Manufacturer Impact Analysis
1. Sources of Information for the Manufacturer Impact Analysis
2. Industry Cash Flow Analysis
3. Manufacturer Sub-Group Analysis
4. Competitive Impacts Assessment
5. Cumulative Regulatory Burden
H. Utility Impacts Analysis
I. Environmental Assessment
J. Employment Impact Analysis
K. Regulatory Impact Analysis
III. Candidate Energy Conservation Standards Levels
IV. Public Participation
A. Attendance at Public Meeting
B. Procedure for Submitting Requests to Speak
C. Conduct of Public Meeting
D. Submission of Comments
E. Issues on Which DOE Seeks Comment
1. Installation Model
2. Venting Issues
3. Efficiency Distribution of Weatherized Gas Furnaces
4. 81 percent AFUE Furnaces with and without Two-stage Modulating Controls
5. Regulation of Furnace Electricity Consumption
V. Regulatory Review and Procedural Requirements
VI. Approval of the Office of the Secretary

I. Introduction

A. Purpose of the ANOPR

The purpose of this ANOPR is to provide interested persons with an opportunity to comment on:

(i) The product classes that the Department is planning to analyze;

(ii) the analytical framework, models, and tools (*e.g.*, life-cycle cost (LCC) and national energy savings (NES) spreadsheets) that the Department has been using in performing analyses of the impacts of energy conservation standards;

(iii) the results of preliminary analyses for the engineering, LCC, payback, and NES contained in the ANOPR Technical Support Document (TSD): Energy Efficiency Standards for Residential Furnaces and Boilers and summarized in this ANOPR; and

(iv) the candidate energy conservation standard levels that the Department has developed from these analyses.

B. Summary of the Analysis

The Energy Policy and Conservation Act, as amended (EPCA or Act), authorizes the Department of Energy (DOE or Department) to establish minimum energy conservation standards for certain major household appliances. The Act established efficiency standards for certain residential furnaces and boilers, with an effective date of January 1, 1992. (42 U.S.C. 6295(f)) In addition, the Act requires the Department to determine whether the standards should be amended.

The Department began the preliminary work for this rulemaking in 2001 and conducted a series of analyses. The Department conducted in-depth technical analyses in the following areas: engineering, life-cycle cost (LCC) and payback periods (PBP), and national energy savings (NES) and economic impacts. This ANOPR discusses the methodologies and assumptions for each of these analyses. Table I.1 provides a summary of the key inputs, assumptions, and methods employed for each analysis area. Table I.1 also shows where to find the results in this ANOPR. It is important to note that the analysis results presented in this ANOPR are subject to revision following review and input from stakeholders and other interested parties. The final rule publication will contain the final analysis results.

TABLE I.1—IN-DEPTH TECHNICAL ANALYSES FOR THE ANOPR

Analysis area	Methodology	Key inputs	Key assumptions	ANOPR section for results
Engineering: equipment manufacturing costs, markups, and installation costs.	Teardown analysis supplemented with design option analysis; RS-Means based cost-weighted averages of many configurations.	Component cost data; financial reports of firm costs, expenses, and profits; installation configuration weights; component and labor cost.	Industry average "Greenfield Plant;" Production volumes; updated GRI venting survey weights; labor costs from RS Means; material costs from distributors.	Section II.E
LCC and PBP	Building-by-building analysis of a representative weighted sample of residential consumers; energy consumption according to field use.	First costs from engineering analysis; AEO 2003 energy price forecasts; RECS 97 houses; virtual models from product literature with size-related parameters.	1997 RECS database subsets are nationally representative.	Section II.G
National impacts	Forecasts of national furnace and boiler costs and energy consumption.	Historical and projected shipments; average installed cost and energy consumption from the LCC analysis; and AEO 2003 energy price forecasts.	Responsiveness of shipments forecasts to installed cost; share of condensing gas furnaces in base case forecast; future trends in equipment costs.	Section II.H

During the development of the above analyses, the Department consulted with interested parties to provide as much detail as possible on the development of the analyses. The Department continues to seek input from all interested parties on the methodologies, inputs, and assumptions used to develop the analyses. Obtaining that input is a primary purpose of this ANOPR.

1. Engineering Analysis

The engineering analysis establishes the relationship between the cost and efficiency of residential furnaces and boilers. This relationship serves as the basis for cost/benefit calculations for individual consumers, manufacturers, and the Nation.

The baseline model for each product class is the starting point for analyzing technologies that provide energy-efficiency improvements. The Department defines a baseline model as an appliance having commonplace, cost-effective features and technologies while still meeting the current standard.

After defining the baseline models, the Department estimated total installed cost to the consumer through an analysis of (1) manufacturer costs, (2) markups, which are the multiplier used to determine consumer price based on manufacturing cost, and (3) installation costs. DOE estimated annual average operating costs by calculating energy consumption using the DOE test procedure, applying average energy prices, and adding annual average maintenance costs.

The Department developed manufacturing and installation costs through the use of tear-down analysis and cost modeling techniques and calibrated them to industry data sources. The Department determined all distribution markups through use of firm balance sheet data, U.S. Census Bureau data, and data from the Manufacturing Housing Institute for mobile home furnaces (use of the term ''mobile home furnace'' is discussed in section I.C.3.c, ''Treatment of Mobile Home Furnaces'' of this document).

Using the above inputs and calculation of energy consumption based on the DOE test procedure, the Department calculated payback periods for various design options to improve efficiency. The payback period represents the time needed for the increase in average, total installed equipment cost to be offset by annual, average operating cost savings. The Department presents these payback periods to address the legally established ''rebuttable'' presumption that an energy conservation standard is ''economically justified'' if the additional cost to a consumer purchasing the more efficient product is less than three times the value of the energy savings during the first year of the product's use. (42 U.S.C. 6295(o)(2)(B)(iii))

2. Life-Cycle Cost (LCC) and Payback Period (PBP) Analysis

The LCC and PBP analysis determines the economic impact of potential standards on consumers. The LCC that DOE calculated expresses the costs of installing and operating a furnace or boiler for its expected lifetime starting in the year 2012—the expected effective date for any new furnace standard, at the time the analysis occurred. The analysis compares the LCC of equipment with efficiency improvements designed to meet possible energy-efficiency standards with the LCC of the equipment likely to be installed in the absence of standards. The PBP represents the number of years of operation needed to achieve savings sufficient to pay for the increased installed cost of higher-efficiency equipment. It is the change in total installed cost due to increased efficiency divided by the change in annual operating cost from increased efficiency.

The LCC calculation considers total installed cost (equipment cost plus installation cost), operating expenses (energy use and maintenance), equipment lifetime, and the discount rate. The Department performed the LCC analysis from the perspective of the users of residential furnaces and boilers. DOE calculated the energy consumption of furnace and boilers using data from the 1997 Residential Energy Consumption Survey (RECS97) conducted by the Energy Information Administration (EIA).[1] DOE calculated future energy costs using energy price forecasts from EIA's Annual Energy Outlook 2003 (AEO 2003).[2]

The LCC analysis uses a distribution of values to account for uncertainty and variability in the inputs to the LCC calculation. For each input, there is a distribution of values with probabilities attached to each value. As a result, the analysis produces a range of LCC results. An advantage of this approach is that DOE can identify the percentage of consumers achieving LCC savings or attaining certain payback values due to an increased efficiency standard, in addition to the average LCC savings or payback period for that standard.

3. National Impacts Analysis

The national impacts analysis estimates the national energy savings (NES) and the net present value (NPV) of total customer costs and savings expected to result from new standards at specific efficiency levels. The Department calculated NES and NPV for a given standard level as the difference between a base case forecast (without new standards) and the standards case forecast (with standards). The Department determined national annual energy consumption by multiplying the number of units in the stock of residential furnaces and boilers (by vintage) by the unit energy consumption (also by vintage). Cumulative energy savings are the sum of the annual NES determined over a specified time period. The Department calculated net savings each year as the difference between total operating cost savings and increases in total installed costs. Cumulative savings are the sum of the annual NPV determined over a specified time period. Critical inputs to this analysis include shipments projections (based in part on data provided by the Gas Appliance Manufacturers Association (GAMA)), retirement rates (based on estimated equipment lifetimes), and estimates of change in equipment purchase patterns in response to change in equipment costs due to standards (based on historical parameters).

C. Authority

Part B of Title III of EPCA established the Energy Conservation Program for Consumer Products other than Automobiles (Program). The consumer products currently subject to this Program (referred to as ''covered products'') include residential furnaces and boilers, the subject of this ANOPR. (42 U.S.C. 6291 *et seq.*)

The Act authorizes the Department to prescribe new or amended standards for furnaces and boilers. (42 U.S.C. 6295(a), (f)) Any new or amended standard must be designed to achieve the maximum improvement in energy efficiency that is technologically feasible and economically justified and must result in significant conservation of energy. (42 U.S.C. 6295(o)(2)(A), (o)(3)) To determine whether the proposed standard is economically justified, the Department must determine that the benefits of the proposed standard exceed its burdens to the greatest extent practicable, weighing the following seven factors:

(1) The economic impact of the standard on the manufacturers and on the consumers of the products subject to such standard;

(2) The savings in operating costs throughout the estimated average life of the covered products which are likely to result from the standard;

(3) The total projected amount of energy savings likely to result directly from the standard;

(4) Any lessening of the utility or the performance of the covered products likely to result from the standard;

(5) The impact of any lessening of competition, as determined in writing by the Attorney General, that is likely to result from the standard;

(6) The need for national energy conservation; and

(7) Other factors the Secretary considers relevant. (42 U.S.C. 6295(o)(2)(B)(i)).

[1] U.S. Department of Energy—Energy Information Administration, Residential Energy Consumption Survey: Household Energy Consumption and Expenditures 1997, 1999. Washington, DC. Report No. DOE/EIA–0321(97). <*http://www.eia.doe.gov/emeu/recs/recs97/publicusefiles.html*>

[2] U.S. Department of Energy—Energy Information Administration, Annual Energy Outlook 2003: With Projections Through 2025, January, 2003. Washington, DC. Report No. DOE/EIA–0383 (2003). <*http://www.eia.doe.gov/oiaf/aeo*>

D. Background

1. History of Standards Rulemaking for Residential Furnaces and Boilers

EPCA established efficiency standards for residential furnaces and boilers. It set the standard in terms of the Annual Fuel Utilization Efficiency (AFUE) descriptor at a minimum value of 78 percent for most furnaces.[3] EPCA set the minimum AFUE at 75 percent for gas steam boilers and 80 percent for other boilers. For mobile home furnaces, EPCA set the minimum AFUE at 75 percent. The effective date for these standards was January 1, 1992. (42 U.S.C. 6295(f)(1))

For ''small'' furnaces (those having an input rate of less than 45,000 British thermal units (Btu) per hour), the Act required the Department to publish a final rule by January 1, 1989, and to set a minimum AFUE at a specific percent not less than 71 percent and not more than 78 percent. (42 U.S.C 6295(f)(1)(B)) For these products, the Department published an Advance Notice of Proposed Rulemaking (ANOPR) (52 FR 46367, December 7, 1987), followed by a Notice of Proposed Rulemaking (NOPR) (53 FR 48798, December 2, 1988), in which the Department proposed to establish an energy conservation standard of 78 percent AFUE for small gas furnaces. In a final rule (54 FR 47916, November 17, 1989), the Department set the minimum AFUE for these products at 78 percent, with an effective date of January 1, 1992.

For mobile home furnaces, the Act directed the Department to publish a final rule before January 1, 1992, to determine whether the standard should be amended. (42 U.S.C. 6295 (f)(3)(A)) The Act required the effective date for amendments to be January 1, 1994. The Department started this activity and issued an ANOPR (55 FR 39624, September 28, 1990), followed by a NOPR (59 FR 10464, March 4, 1994). As part of this activity, the Department proposed a new energy descriptor that accounts for both natural gas and electricity use in a furnace. DOE rejected this approach because ''energy use'' is defined in 42 U.S.C. 6291(4) as ''the quantity of energy directly consumed by a consumer product at point of use,'' and therefore, furnace energy conservation standards must be based on consumption of energy at the site of the appliance, but DOE had difficulty in accounting for the source energy associated with electricity use. (61 FR 36983, July 15, 1996) Several events, including a fiscal year 1996 moratorium on proposing or issuing new or amended appliance energy conservation standards and the development of an improved process for the Department's energy efficiency standards rulemakings, interrupted further activities on this rulemaking. No final rule for mobile home furnace standards was published.

The Act also required the Department to publish a final rule to determine for all furnaces and boilers whether the standards should be amended. (42 U.S.C. 6295(f)(3)(B)) The Act required that DOE publish this final rule before January 1, 1994, and, if the Department determined that the standards should be amended, the Act required that those amendments be effective on January 1, 2002. The Department started this activity and, in September 1993, published an ANOPR in which it presented the product classes for furnaces that it planned to analyze, and a detailed discussion of the analytical methodology and models that it expected to use in this rulemaking. (58 FR 47326, September 8, 1993) The Department invited comments and data on the accuracy and feasibility of the planned methodology and encouraged interested persons to recommend improvements or alternatives to DOE's approach.

In its fiscal year 1998 Priority Setting for the Appliance Rulemaking Process, the Department assigned a low priority level to residential furnaces and boilers, which meant it did not plan to actively pursue the rulemaking over the next two years. The Department thus limited its work on these products to basic technology investigation.

In the fiscal year 2001 Priority Setting for the Appliance Rulemaking Process, DOE assigned a high level of priority to residential furnaces and boilers, including mobile home furnaces, which meant the Department planned to pursue the rulemaking actively through meetings, workshops, and published notices (*See* section I.C.2).

Table I.2 summarizes the history of the standards for furnaces and boilers.

TABLE I.2—HISTORY OF FURNACE AND BOILER STANDARDS

	Furnaces/boilers	Small furnaces	Mobile home furnaces
Original standard	78% (boilers 80%, gas steam boilers 75%).	78%	75%.
Standard Requirement Source	NAECA* **	Final Rule	NAECA.
Publication year	1987	1989	1987.
ANOPR	1993*	1993*	1993* and 1994*.
Current Rulemaking	Furnace Rulemaking beginning date FY2001.	Defined as part of Furnace Product Class as of 1989.	Included as a separate Product Class.

* Rulemaking initiated but not finished.
** National Appliance Energy Conservation Act.

2. Current Rulemaking Process

The framework presented in this ANOPR reflects the improvements and steps detailed in Procedures, Interpretations and Policies for Consideration of New or Revised Energy Conservation Standards for Consumer Products (Process Rule) 10 CFR 430, Subpart C, Appendix A, which elaborates on the procedures, interpretations, and policies that will guide the Department in establishing new or revised energy efficiency standards for consumer products. The rulemaking process is dynamic. If timely new data, models, or tools that enhance the development of standards become available, the Department will incorporate them into the rulemaking.

The Department held a workshop on July 17, 2001, to discuss the proposed analytical framework for conducting this rulemaking. The framework presented at the workshop described the

[3] EPCA states that a ''furnace'' includes forced-air and gravity central furnaces and low-pressure steam and hot water boilers, and that it must have a heat input rate of less than 225,000 Btu/h for forced-air and gravity central furnaces, and less than 300,000 Btu/h for boilers. (42 U.S.C. 6291(23)) However, in this ANOPR, DOE has adopted the terminology used in the HVAC (Heating, Ventilation and Air Conditioning) industry, which considers furnaces and boilers as separate categories.

different analyses to be conducted (*see* Table I.3), the methods proposed for conducting them, and the relationships among the various analyses.

TABLE I.3.—RESIDENTIAL FURNACE AND BOILER ANALYSIS

ANOPR	NOPR	Final rule
Market and technology assessment	Revised ANOPR Analyses	Revised analyses.
Screening analysis	Life-cycle cost sub-group analysis.	
Markups for equipment price determination	Manufacturer impact analysis.	
Engineering analysis	Utility impact analysis.	
Energy Consumption	Environmental assessment.	
Life-cycle cost and payback period analyses	Employment impact analysis.	
Shipments analysis	Regulatory impact analysis.	
National impact analysis.		

The Department held a public workshop on May 8, 2002, to receive and discuss comments on issues related to venting installations for residential furnaces and boilers and to discuss the Department's research concerning venting systems.

Statements received after publication of the framework document for the Residential Furnace and Boiler Standards Rulemaking and at workshops mentioned above helped identify issues involved in this rulemaking, and provided information that has contributed to DOE's proposed resolution of these issues. This ANOPR quotes and summarizes many of the statements. A parenthetical reference at the end of a quotation or paraphrase provides the location of the item in the public record.

In June 2002, DOE asked GAMA to review DOE's analysis of manufacturing costs. GAMA provided comments which the Department considered in its further analysis.

In August 2002, GAMA convened a meeting to discuss approaches for analyzing electricity use in furnaces. The Department, GAMA, and the American Council for an Energy-Efficient Economy (ACEEE) presented their ideas about this issue. In December 2002, DOE reconsidered its authority to impose a standard that limits electricity consumption in residential furnaces and boilers (*See* section I.D.3.h of this ANOPR).

In September 2002, the Department posted the engineering analysis for furnaces and boilers on its website and asked for comments. GAMA, ACEEE and Natural Resources Canada (NRCanada) provided comments which DOE considered in its further analysis.

In response to stakeholder comment, the Department developed a detailed installation cost model to determine venting costs for residential furnaces and boilers. This ANOPR document (and accompanying TSD and spreadsheets) presents this ''Installation Model'' for stakeholder review and comment. Subsequently, in the spring and summer of 2003, the Department finished its analysis which is described in this ANOPR.

According to the proposed rulemaking timeline, as published in the December 22, 2003, Regulatory Agenda, DOE expects to issue a Final Rule in September 2005. The effective date for any new standards for furnaces and boilers will be eight years after its publication as a final rule in the **Federal Register**. (42 U.S.C. 6295 (f)(3)(B))

The Department received a number of comments concerning the rulemaking timeline. Several stakeholders commented that DOE should accelerate the rulemaking and implementation, while others thought the existing schedule was satisfactory. Those favoring an accelerated schedule include ACEEE, the Alliance to Save Energy (ASE), the California Energy Commission (CEC), Edison Electric Institute (EEI), Natural Resources Defense Council (NRDC), Oregon Department of Energy (ODOE), and Southern Company. ACEEE commented that DOE should commit to an effective date several years earlier than 2012. (ACEEE, No. 15 at p. 1)[4] ASE also believes that an eight-year lag in implementation of the standard is too long, and recommends a three-year lag, or, if the efficiency standard is a substantial increase, a five-year lag. (ASE, No. 18 at pp. 1 and 2) CEC commented that the eight-year lag is too long, and believes the standards should take effect in January 2007. (CEC, No. 19 at p. 3) EEI commented that DOE should accelerate the rulemaking for furnaces and boilers to maximize energy savings and avoid affecting market shares of natural gas and electric heating. (EEI, No. 6 at p. 1) NRDC commented that the proceeding is very late, and therefore DOE should accelerate the final rule. NRDC also commented that DOE has demonstrated it can go from the ANOPR through a final rule in a year, and should have this as a goal in this proceeding. (NRDC, No. 21 at pp. 1 and 2) ODOE commented that DOE should change the lead time to a three-year interval. (ODOE, No. 10 at p. 4) Southern Company commented that DOE should minimize the time between the effective dates of the air conditioner and the furnace rulemakings and stated that DOE should not give longer than a five-year lead time. (Southern, No. 14 at p. 2)

In contrast, Trane commented that DOE should keep the current time line. (Trane, No. 9 at p. 1) GAMA also supported a 2012 effective date for compliance. (GAMA, No. 8 at p. 1)

The Department intends to follow the relative timeline outlined in the National Appliance Conservation Act (NAECA). Section 325(f)(3)(B) provides the same lead time between publication of amended standards for furnaces (including mobile home furnaces) and the effective date of such standards. Therefore, DOE is using the same effective date for all furnaces including mobile home furnaces.

The American Gas Association (AGA) recommended scheduling follow-up workshops to discuss specific work as finished. (AGA, No. 11 at p. 5) The Department will document its assumptions, methods, and results, and will make these available for public review.

GAMA commented that DOE's accounting of national benefits should consider not only the net benefit to consumers, but also the net benefits or costs to manufacturers, utilities, and the net affect on the whole U.S. economy. (GAMA, No. 41 at p. 5) DOE's LCC

[4] Example: ''(GAMA, No. 8 at pp. 2–4)'' refers to a written statement that was submitted by the Gas Appliance Manufacturers Association and is recorded in the DOE Building Technologies Program Resource Room in the Docket under ''Residential Furnaces and Boilers'', as comment number 8, and the passage appears on pages 2 through 4 of that statement. Likewise, ''(Public Workshop Tr., No. 25JJ at p. 245)'' refers to an oral statement which appears on page 245 of the transcript of the Furnace and Boiler Venting Workshop held in Washington, DC, May 8, 2002.

analysis accounts for net benefits to consumers. Other analyses that DOE will perform for the NOPR stage of this rulemaking consider impacts on manufacturers (MIA), utilities in the utility and environmental analyses, and national employment impacts in the employment analysis.

AGA encouraged DOE to monetize and include indirect societal costs and environmental benefits to the extent possible. (AGA, No. 11 at p. 5) The Department will consider all the benefits and costs, both qualitative and quantitative, including the results of the consumer, environmental, employment, utility, and manufacturer impact analyses when deciding what standard level to select. DOE believes that attaching a monetary value to many impacts involves a high level of uncertainty and is not always practical.

3. Miscellaneous Rulemaking Issues

a. Separate Efficiency Standards for Different Regions

Because the cost-effectiveness of a furnace design is highly dependent on its heating load, which is affected by climate, some stakeholders suggested that DOE allow for a standard that varies by region of the country. ACEEE commented that the standard should allow individual states to require condensing furnaces and boilers whenever they are cost-effective or required for safety reasons. (ACEEE, No. 15 at p. 2) It suggested that DOE could establish a furnace and boiler standard at an efficiency level that requires condensing technology, and could allow individual states where such a level might not be cost-effective to receive an automatic exemption from the standard upon petition. (ACEEE, No. 15 at p. 2) CEC would like the Department to set a standard that requires condensing furnaces in states with cold climates and believes that individual states where such a standard might not be cost-effective should be able to use DOE data to justify petitions for waivers from preemption. (CEC, No. 19 at p. 5) Similarly, NRDC commented that the Department should issue a standard that allows individual states where such a standard might not be cost-effective to get waivers from preemption for a standard at 90 percent or higher AFUE. (NRDC, No. 21 at p. 3) GAMA said that a state option on condensing furnaces would be illegal under EPCA. (GAMA, No. 31 at p. 9) Southern believes that manufacturers should be allowed maximum flexibility in designing systems to meet varying climatic conditions. (Southern, No. 14 at p. 4) EEI said that regional standards would destroy national standards. (Public Workshop Tr., No. 25JJ at p. 251)

The Department recognizes that regional climatic effects may be important in the assessment of proposed energy efficiency standards for heating equipment because the energy demand and financial impacts to consumers can vary significantly with variations in climate. The life-cycle cost analysis considers regional impacts. However, DOE believes that the Act does not authorize the adoption of regional standards. *See* 42 U.S.C. 6291(6)(A).

b. Separate Efficiency Standards for New Construction and Replacement Markets

ASE commented that the Department should allow different efficiency levels for products installed in new versus replacement applications. ASE stated that the Department's treatment of fluorescent lamp ballasts, where the efficiency standard is different for new construction and replacement applications, is a precedent for this approach. (ASE, No. 18 at p. 2) ASE also would like the Department to grant states the option of a separate standard for equipment used in new construction. (ASE, No. 18 at p. 2)

EPCA does not allow DOE to set more than one efficiency standard for the same base model of a covered product. *See* 42 U.S.C. 6291(6)(A). *See* also 10 C.F.R. 430.62. The efficiency standard for fluorescent lamp ballasts is different for new construction and replacement applications because the products have different design characteristics and are marketed and shipped as different products. When manufacturers ship these products, they label them explicitly to show whether they are intended for new construction or for replacements. In the case of furnaces and boilers, the Department is not aware of any products separately marketed, labeled, and shipped either for new construction installations or for the replacement market. Therefore, the Department does not plan to permit the states the option of a separate standard for equipment used in new construction.

The Department received comments on products to include or exclude from the rulemaking. Both the CEC and ODOE recommended that DOE include units designed for three-phase electricity. (CEC, No. 19 at p. 2; ODOE, No. 10 at p. 2) EPCA explicitly states at 42 U.S.C. 6291 (a)(23) that the only furnace products that are covered products under the statute are those that use single-phase or DC (direct current) electricity in conjunction with natural gas, propane or home heating oil; and the Department must therefore exclude models that use three-phase electricity.

c. Treatment of Mobile Home Furnaces

Carrier and Trane believe that DOE should treat mobile home furnaces the same as other gas furnaces, and Trane suggested that the gas furnace product class should include mobile home furnaces. (Carrier, No. 7 at p. 2; and Trane, No. 9 at p. 1) GAMA commented that there should be no extra review or different lead time for amending the energy efficiency standard for mobile home furnaces. (GAMA, No. 8 at p. 1) The Manufactured Housing Institute (MHI) suggested that the Department use the term ''manufactured home'' instead of ''mobile home.'' (MHI, No. 13 at p. 1)

Because of their distinct market channels and installation restrictions, the Department decided to analyze mobile home furnaces as a separate product class. DOE currently plans to make the effective date for this product class the same as for other types of furnaces: January 1, 2012. Regarding the terminology for this product class, the Act uses the term ''mobile home furnace.'' The Department understands that the manufactured home market includes non-mobile/modular homes as well as mobile homes. Under the statute (42 U.S.C. 6295(f)(2) and (3)), the Department can only regulate the efficiency of mobile home furnaces, so it will use the term ''mobile home furnace'' until such time as Congress may amend the statutory language.

d. Potential Market Share Shifts Due to Standards

Several stakeholders, including AGA, the National Propane Gas Association (NPGA), and Trane, expressed concern that standards on gas furnaces could lead to increased purchase of electric furnaces: (1) Any standards should be fuel neutral and avoid distortion of market factors (AGA, No. 11 at p. 1); (2) if standard level efficiency is too high, consumers forced to change the venting system could choose an electric unit rather than replacing the gas-fired unit with a similar one (NPGA, No. 4 at p. 3); (3) a gas furnace standard requiring AFUE > 90 percent could encourage a shift to electric heat pumps and/or combination systems if the latter are not comparably regulated (Trane, No. 9 at p. 3); and (4) a high standard on LPG furnaces could increase the market share of electric units. (NPGA, No. 4 at p. 2) DOE's analysis accounts for potential market shifts to electric heating that may follow from a higher standard on gas furnaces. DOE's analysis is designed to determine the

extent of the market shift among fuel types.

This information is used in the manufacturer impact analysis (MIA) which examines financial impacts on manufacturers and manufacturer subgroups. The MIA is provided to the Department of Justice (DOJ) to facilitate its determination of the impact of any lessening of competition that is likely to result from the imposition of proposed energy efficiency standards.

e. Inclusion of Electric Furnaces in the Rulemaking

CEC, NPGA, and ODOE all supported the inclusion of electric furnaces in the rulemaking. (CEC, No. 19 at p. 2; NPGA, No. 4 at p. 2; ODOE, No. 10 at p. 2) According to the American Society of Heating, Refrigerating and Air-Conditioning Engineers (ASHRAE), however, the AFUE rating for an electric furnace is already generally greater than 98 percent, and if the furnace is located within the heated space, the AFUE is 100 percent. No person has submitted to DOE any data or information to the contrary. Therefore, because of the limited opportunity for any improvement in energy efficiency as measured by AFUE and energy directly consumed by the product at the point of use, DOE decided not to include electric furnaces in this rulemaking.

f. Transparency of the Analysis

The Gas Technology Institute (GTI) would like the Department to use simple spreadsheet analyses whenever possible. (GTI, No. 5 at p. 3) The Department uses well-documented spreadsheets in its analyses. Most spreadsheets and other models used in this rulemaking are available to stakeholders for review and comment, and DOE is prepared to provide interested stakeholders explanations and some technical support in the use of the spreadsheets. To ensure the confidentiality of proprietary cost data, teardown cost model details will remain private. Methodology and aggregate industry assumptions and results are available for public comment. DOE welcomes any questions or comments on how to further simplify the analytical methods it has used in this rulemaking.

g. Data Used in the Analysis

EEI commented that DOE should use the most recent information available and recommended that DOE use the next version of the RECS when it is published. (EEI, No. 6 at p. 2) DOE makes every effort to use the most current version of RECS that is available at the time of each analysis. The analysis reflects the 1997 RECS and will be updated as a new RECS becomes available.

GTI stressed the verification of all data. (GTI, No. 5 at p. 3) The Department uses the most reliable and accurate data available at the time of each analysis in this rulemaking. All data will be available for public review, and DOE welcomes any additional data for verification.

h. Regulation of Furnace and Boiler Electricity Consumption

Furnaces and boilers use a significant amount of electricity. The Department's analytical framework described an approach to regulate the electricity use of residential furnaces and boilers that would involve specifying a maximum annual electrical consumption. The current DOE test procedure (10 CFR 430, subpart B, Appendix N) provides a means for determining electrical consumption. During the Framework Workshop, DOE asked for comments concerning whether and how to regulate electricity consumption of furnaces and boilers.

In 1995, the Department considered development of a single descriptor that combines electricity use and a measure of fuel efficiency, AFUE. At the time, the approach considered the source energy input associated with the electricity use of a furnace or boiler and was rejected in 1997 because EPCA and NAECA do not permit the regulation of source energy. EPCA and NAECA specify that efficiency must be based on the energy consumption at the point of use. (42 U.S.C. 6291 (4))

In comments on DOE's Framework, ACEEE, CEC, and NRDC supported a standard for electric efficiency. (ACEEE, No. 15 at p. 3; CEC, No. 19 at p. 3; and NRDC, No. 21 at p. 3) ODOE supported setting a standard for electricity consumption of fuel-fired furnaces and boilers. (ODOE, No. 10 at p. 2)

EEI recommended that DOE not spend any effort on electricity consumption. EEI drew a parallel to a previous rulemaking, stating that since DOE did not analyze evaporator fan energy use for central air conditioners and heat pumps because it does not affect the seasonal energy efficiency ratio (SEER), DOE should not analyze furnace fan electricity use because it does not affect AFUE. (EEI, No. 6 at p. 4)

AGA and GTI also recommended avoiding electricity consumption in this rulemaking, and suggested that DOE could address it in an electric motor rulemaking. (AGA, No. 11 at p. 3; and GTI, No. 5 at p. 3) EEI commented that DOE should not consider design options to increase fan and motor efficiencies, since furnace motors may be regulated as a separate product. (EEI, No. 6 at p. 4) NRDC said that DOE should not wait to see what Congress does in terms of regulating furnace fan energy use, as it is authorized and required to consider this issue on its own initiative. (NRDC, No. 21 at p. 3)

AGA recommended that DOE not limit a standard for electricity use to fuel-fired furnaces and boilers. (AGA, No. 11 at p. 2). Southern commented that the efficiency of fans in electric resistance furnaces makes no difference to the overall electricity use because the heat from the fan contributes to heating. (Southern, No. 14 at p. 3)

Lochinvar recommended against putting an electricity requirement on boilers, since the installation configuration determines the capacity of the pump. (Lochinvar, No. 17 at p. 2)

GAMA commented that any electricity consumption regulation should be based on parameters that exist in the current test procedure. (GAMA, No. 8 at p. 4) Lennox commented that E_{AE}, a descriptor of furnace and boiler electricity consumption that is currently described in the test procedure and is reported by manufacturers, is the best choice for an electrical energy descriptor. (Lennox, No. 16 at p. 2)

ACEEE supported measuring electric efficiency in terms of watts of electricity per cubic feet per minute (CFM) of airflow of a furnace blower and encouraged DOE to use realistic static pressures. (ACEEE, No. 15 at p. 3) NRDC recommends setting efficiency standards on fans in similar terms and believes DOE should set standards under standardized testing conditions at a fixed static pressure. (NRDC, No. 21 at pp. 3 and 2)

ACEEE, CEC, and ODOE would like to see electricity consumption regulated separately from AFUE. (ACEEE, No. 15 at p. 5; CEC, No. 19 at p. 3; and ODOE, No. 10 at p. 4) EEI stated that DOE should not include furnace fan energy use in AFUE calculations, since electricity is consumed throughout the year and AFUE is only for the heating season. (EEI, No. 6 at p. 2) Southern agrees that AFUE should not include electricity. (Southern, No. 14 at p. 3) Trane commented that AFUE does not include electric consumption and a new descriptor would delay the rulemaking process. (Trane, No. 9 at p. 2) Energy Kinetics commented that an efficiency rating should include annual electric consumption. (Energy Kinetics, No. 3 at p. 4)

In August 2002, GAMA convened a meeting to discuss the above issues at which the Department, GAMA, and ACEEE presented their ideas. In the fall of 2002, the Department considered

whether it had the legal authority to regulate electricity consumption in residential furnaces and boilers. Title 42 of the United States Code provides in section 6291(6) that an ''energy conservation standard'' is either (A) ''a * * * level of energy efficiency'' or ''a * * * quantity of energy use,'' or (B) ''a design requirement for the products specified * * *'' Item (A) above seems to say that a single ''energy conservation standard'' cannot have measures or descriptions for both energy efficiency and energy use. A standard that includes both a level of energy efficiency and a quantity of energy use (kWh, thousands of watt-hours) would appear to conflict with the statutory language. Moreover, the Act, 42 U.S.C. 6291(20), states that ''the term 'annual fuel utilization efficiency' means the efficiency descriptor for furnaces and boilers, determined using test procedures prescribed under section 323 * * *'' The statute also requires DOE to use AFUE as the efficiency descriptor for furnaces and boilers. (42 U.S.C. 6295(f)(1)) Thus, DOE believes that the statute would have to be amended to include electricity use in the AFUE before DOE could regulate electricity use in furnaces and boilers. Based on the approaches DOE considered and the statutory language, the Department believes it cannot set energy conservation standards for electricity use in conjunction with energy efficiency standards for residential furnaces and boilers at the present time.

For informational purposes only, the Department did investigate a way to define an electricity use standard that would involve measuring electricity use as a function of furnace input capacity and the airflow. The details of this approach are given in Appendix 8.5 of the TSD.

4. Test Procedure

Section 7 of the Process Rule recommends that the Department identify and propose necessary modifications to relevant test procedures before issuing an ANOPR for energy conservation standards. There is an existing DOE test procedure for all furnace and boiler product classes, which DOE last revised in 1996. (10 CFR part 430, Appendix N to Subpart B, Uniform Test Method for Measuring the Energy Consumption of Furnaces and Boilers) To a large extent, the DOE test procedure references ANSI/ASHRAE 103–1993, Method of Testing for Annual Efficiency of Residential Central Furnaces and Boilers.

The DOE test procedure includes a measurement of electricity consumption, Average Annual Auxiliary Electrical Energy Consumption (E_{AE}). The furnace fan accounts for about 85 percent of total furnace electricity consumption. To allow proper selection of blower capacity, manufacturers rate furnace models in nominal cubic feet per minute (CFM) of cooling airflow at 0.5 inches external static pressure; however, they do not report this as part of the test procedure.

DOE received several comments on the existing test procedure for furnaces and boilers. Energy Kinetics recommended using the same operating conditions for boilers as for furnaces and said that the existing test procedure does not fully capture the differences in characteristics between boilers and furnaces. (Energy Kinetics, No. 3 at p. 1 and p. 3, respectively) The analyses in this rulemaking are based on the existing test procedure. However, DOE is interested in additional data that would help the Department consider whether to update the existing test procedure to more accurately reflect actual boiler energy use.

The Oilheat Manufacturers Association (OMA) commented that accurate evaluation of fuel savings from jacket insulation may need changes to the AFUE test. (OMA, No. 20 at p. 3) At this point, DOE believes the test procedure adequately deals with jacket insulation issues. DOE is aware that as a part of the regular update of the ASHRAE Standard 103 test procedure, ASHRAE is looking at several areas of the test procedure, including the effect of jacket insulation. Depending on ASHRAE's findings, DOE may consider amending this part of the test procedure.

Lochinvar Corporation commented that the test procedure for boilers does not properly reflect normal residential operation, as the temperature differential range of 10°F to 40°F found in normal operation is more accurate than the range in the test procedure. (Lochinvar, No. 17 at p. 1) Lochinvar also commented that DOE should use the thermal efficiency as the descriptor for boilers. (Lochinvar, No. 17 at p. 2) DOE uses AFUE for the energy descriptor because EPCA mandates it.

OMA commented that DOE may need to revise its testing and rating procedures to evaluate electricity savings for oil-fired equipment. (OMA, No. 20 at p. 2) The current test procedure calculates the average annual auxiliary electrical energy consumption for oil furnaces using the same approach as for gas furnaces. The Department is not aware of any problems with using the existing procedure for oil-fired equipment and asks stakeholders that are aware of such problems to provide specific comments.

The Department will continue to use the assumptions and conditions in the current test procedure. However, DOE is interested in high-quality field data so it can consider whether updating the existing test procedure is warranted.

DOE received several comments regarding a test procedure for combined water and space heating appliances (combination appliances). Carrier and Southern Company commented that DOE should establish a test procedure for combined appliances. (Carrier, No. 7 at p. 1; and Southern, No. 14 at p. 3) Trane commented that DOE should include combination systems in the rulemaking using standard water heaters, and that a test procedure should start with ASHRAE 124–1991. (Trane, No. 9 at p. 1) ODOE also commented that the test procedure should reference ASHRAE 124–1991. (ODOE, No. 10 at p. 2) CEC commented that DOE should adopt the ASHRAE 124–1991 test procedure and not wait for ASHRAE revisions because the current edition of ASHRAE 124–1991 is widely approved and is adequate for this rulemaking. (CEC, No. 19 at p. 3) First Company commented that ASHRAE 124 is not a true consensus standard and that manufacturers strongly oppose it because it burdens combined appliance manufacturers. (First, No. 12 at p. 1)

The National Institute of Standards and Technology (NIST) is developing a DOE test procedure for combined water heating and space heating equipment based on the ASHRAE 124–1991 test procedure standard. DOE's process for adopting this test procedure has not yet been completed. Therefore, DOE did not analyze combined water heating and space heating equipment in the ANOPR stage of the furnace and boiler rulemaking.

II. Residential Furnace and Boiler Analyses

A. Market Assessment and Technology Assessment

The Department reviewed existing literature and interviewed manufacturers to characterize the market for residential furnaces and boilers in the United States. Industry publications and trade journals, government agencies, and trade organizations provided the bulk of the information, including: (1) Historic shipments by product class, (2) number of models by capacity and efficiency level, (3) manufacturers of various products, and (4) product distribution patterns.

GAMA provided extensive historical shipment data to the Department. Where the data from GAMA were insufficient, DOE estimated historical shipments for each of the product classes through consultations with industry experts. The GAMA data give shipments for gas furnaces, including mobile home furnaces, as a group. Thus, to estimate mobile home gas furnace shipments, the Department used data on total mobile home placements (from the Census Bureau) and data from the American Housing Survey that give the share of gas in existing mobile homes of various vintages.

The Department found no separate data on shipments for weatherized (outdoor) furnaces. It estimated shipments of weatherized gas furnaces based on estimated 1990–1997 shipments of packaged air-conditioning equipment, since the latter are typically coupled with a weatherized gas furnace. These data suggest that weatherized gas furnaces account for 12 percent of total gas furnace shipments (not including mobile home gas furnaces). The remaining gas furnaces are classified as non-weatherized (indoor) gas furnaces. Since there are few weatherized oil-fired furnaces, DOE assumed that all oil-furnace shipments are non-weatherized.

The GAMA data provide total shipments by fuel type for boilers. For each fuel, DOE estimated the split between hot water and steam types, based on estimates GAMA made in the early 1990's.

Table II.1 shows the estimated annual shipments in 2000 and the number of models in each of the product classes. Non-weatherized gas furnaces are by far the largest category.

TABLE II.1.—MARKET STATISTICS FOR FURNACES AND BOILERS BY PRODUCT CLASS

Product class	Estimated shipments in 2000	Number of models in GAMA directory (2001)
Non-weatherized gas furnaces	2,645,000	6907
Weatherized gas furnaces	325,000	4476
Non-weatherized oil-fired furnaces	120,000	868
Weatherized oil-fired furnaces	([1])	13
Mobile home gas furnaces	130,000	70
Mobile home oil-fired furnaces	([1])	16
Hot water gas boilers	190,000	990
Hot water oil-fired boilers	100,000	640
Steam gas boilers	36,000	254
Steam oil-fired boilers	13,000	140

[1] Few.

Most of the non-weatherized gas furnaces on the market have an efficiency of 80 percent AFUE. Only a few 78 percent AFUE models are still on the market. Roughly one-quarter of current sales of non-weatherized furnaces are condensing models, which range mostly between 90 percent and 92 percent AFUE.

The efficiency distribution of weatherized gas furnace models is similar to that of non-weatherized gas furnaces, except that no condensing units exist due to problems with condensate freezing. The efficiency of mobile home gas furnaces is generally either 75 percent or 80 percent AFUE, but there are a few condensing models with an efficiency of 90 to 94 percent AFUE.

There are no gas furnaces currently on the market in the 83 to 89 percent AFUE range. In this range, condensate problems begin to occur, and yet the temperature of the flue is still too high to allow the use of polyvinyl chloride (PVC) for the venting system. These problems make proper venting of such a furnace difficult, requiring the use of higher-quality stainless steel to vent wet flue gases to the outdoors.

In contrast to the available AFUE range of gas furnaces, oil-fired furnace models with an AFUE in the 82 to 86 percent range are available but unavailable in the condensing (90 percent AFUE and above) range. Because of the lower hydrogen content of fuel oil compared to natural gas or propane, condensate problems with oil-fired furnaces at the 82 to 86 percent AFUE range levels are reduced. Condensing oil-fired furnaces are not currently available in the U.S. because the complexities associated with the maintenance of a secondary heat exchanger for oil-fired furnaces make production of high-efficiency oil-fired furnaces impractical.

Most hot-water gas boilers have an AFUE in the 80 to 84 percent range. Gas boilers with higher AFUEs are vented with gas-tight stainless-steel venting systems to avoid condensate problems, until an AFUE of 90 percent is reached and PVC can be used. The AFUE for hot-water oil boilers ranges from 80 to 88 percent. Gas steam boiler models have an AFUE in the 78 to 83 percent range; the range for oil-fired models is 79 to 86 percent AFUE.

A furnace or boiler is composed of a number of components—*e.g.*, heat exchanger, fan and controls. For each of these components, manufacturers can make different choices; each of these choices is called a ''design option.'' For instance, a heat exchanger can be tubular, clamshell, or cylindrical in its design. Any individual furnace or boiler, which can be characterized by an efficiency level according to the DOE test procedure, is composed of an aggregate of design options.

The Department based its list of technically feasible design options on options included in the previous ANOPR. (58 FR 47326, September 8, 1993) The Department then updated the list through consultation with manufacturers of components and systems, trade publications, and technical papers. Since many options for improving product efficiency are available in existing equipment, product literature and direct examination provided additional information.

1. Definition of Product Classes

In general, the Department defines product classes based on information from discussions with appliance manufacturers, trade associations, and other interested parties. For this rulemaking, the Department developed product classes based on the type of energy used and performance-related features that affect utility to the consumers. Based on comments from

stakeholders and the market assessment, the product classes considered in this rulemaking are:

- Gas furnaces
  —Non-weatherized
  —Weatherized
- Oil-fired furnaces
  —Non-weatherized
  —Weatherized
- Mobile home furnaces
  —Gas
  —Oil
- Electric resistance furnaces
- Hot water boilers
  —Gas
  —Oil
- Steam boilers
  —Gas
  —Oil
- Combination space/water-heating appliances
  —Water-heater/fancoil combination units
  —Boiler/tankless coil combination units

The Department received comments on whether to include combination appliances that provide both space heating and domestic water heating as a product class. CEC and Carrier favored including combination appliances in the rulemaking. (CEC, No. 19 at p. 2; and Carrier, No. 7 at p. 1) EEI and Energy Kinetics want the Department to consider combination systems as a separate product category after the finalization of a test procedure. (EEI, No. 6 at p. 1; and Energy Kinetics, No. 3 at p. 2) First Company opposed the inclusion of combination appliances in the rulemaking, stating that separate standards for combination systems are not warranted as they are already regulated as water heaters and boilers, and that including combination appliances will not result in significant energy savings. (First, No. 12 at p. 1) At this time, the Department has decided not to include combination heating and water heating appliances in the current rulemaking. DOE is working on adoption of the existing version of ANSI/ASHRAE 124–1991 ''Methods of Testing for Rating Combination Space-Heating and Water-Heating Appliances'' as a test procedure for these products.

ASE suggested separate product classes for condensing and non-condensing furnaces and boilers. (ASE, No. 18 at p. 2) Condensing furnace and boiler designs are more efficient but otherwise differ very little from non-condensing designs. The difference is the addition of a second heat exchanger; this added component represents a feature that does not change utility to the consumer. Therefore, the Department included condensing and non-condensing designs in a single product class.

Based on the market assessment and stakeholder comments, the Department grouped the product classes into four categories.

The first category consists of the most widely used product class: Non-Weatherized gas furnaces. The Department's analyses considered this product class in depth.

The second category consists of those classes that have shipments that are typically more than 100,000 per year: weatherized gas furnaces, mobile home gas furnaces, non-weatherized oil-fired furnaces, hot-water gas boilers, and hot-water oil-fired boilers. The analysis of these product classes is similar to that of the first category, but DOE considered a smaller number of design options.

The third category includes product classes that have a low level of shipments: Steam gas boilers and steam oil-fired boilers. For these classes, DOE applied the results of the analyses of the hot-water boiler product classes.

The Department did not conduct analyses on the fourth category, which includes weatherized oil-fired furnaces, mobile home oil-fired furnaces, and electric furnaces. The first two classes in this category have very low (essentially zero) shipments. The Department did not consider electric furnaces because they have limited energy-savings potential.

Lochinvar commented that DOE should separate hot water boilers into low-mass and high-mass product classes. (Lochinvar, No. 17 at p. 1) Although they use different construction materials (cast iron vs. copper or aluminum), high- and low-mass boilers are essentially the same equipment and provide the same utility to the consumer. *See* 42 U.S.C. 6295 (q)(1). Therefore, the Department included them in one product class.

Lochinvar also commented that DOE should study boilers to the same extent as furnaces. (Lochinvar, No. 17 at p. 1) DOE used separate analytic tools to separately assess the boilers product class.

B. Screening Analysis

The screening analysis eliminated certain design options from further consideration in the engineering analysis phase. Section 4 of the Process Rule lists four factors to take into account in screening design options:

1. Technological feasibility;
2. Practicability to manufacture, install, and service;
3. Adverse impacts on utility or availability to consumers; and
4. Adverse impacts on health or safety.

GAMA made a general comment that safety must always take priority over efficiency. (GAMA, No. 8 at p. 1) As the Process Rule recommends, the Department will screen out any design options that have adverse affects on the safety of consumers.

The Department received a number of specific comments regarding design options. In considering these comments and its own analysis, the Department screened out a number of options for certain product classes, as shown in Table II.2. The options eliminated include:

(1) Use of condensing secondary heat exchangers for oil-fired furnaces (sulfur content of fuel oil, soot, and heat exchanger fouling may have adverse impacts on health or safety);

(2) Fuel-driven heat pumps (the practicality to manufacture, install, and service is uncertain);

(3) Oil-fired pulse combustion (the practicality to manufacture, install, and service is not certain);

(4) Self-generation of electricity using thermo-photovoltaics (not considered technologically feasible);

(5) Smart valve for oil-fired furnaces and boilers (the practicality to manufacture, install, and service is not certain); and

(6) Flue-gas recirculation (has not yet been shown to be technologically feasible in residential-sized equipment, and it has little energy-saving potential).

For outdoor weatherized gas furnaces, the use of a condensing secondary heat exchanger that produces flue gas temperatures below the dew point temperature is not considered because condensate freezing may have adverse impacts on safety.

Some options are not applicable for certain product classes. For example, improved or increased insulation is not applicable for boilers because boilers are tested as indoor appliances according to the DOE test procedure.

The design options listed in Table II.2 with a ''Y'' (for ''yes'') pass all screening criteria, so DOE initially included them in the engineering analysis. Chapter 4 in the TSD provides more detail on the design options.

TABLE II.2.—SCREENING RESULTS FOR DESIGN OPTIONS BY PRODUCT CLASS

Design option	Gas furnaces		Oil-fired furnaces	Mobile home gas-furnaces	Hot water boilers	
	Non-weatherized	Weatherized			Gas	Oil
Improved Heat Exchanger Effectiveness	Y	Y	Y	Y	Y	Y
Modulating Operation	Y	Y	Y	Y	Y	Y
Improved or Increased Insulation	Y	Y	Y	Y	N/A	N/A
Condensing Secondary Heat Exchanger	Y	N	N	Y	Y	Y
Electronic Ignition	b	b	b	Y	Y	b
Induced or Forced Draft	b	b	b	Y	Y	b
Infrared Burner	Y	Y	Y	Y	Y	Y
Direct Vent	Y	Y	Y	Y	Y	Y
Smart Valve	N/A	N/A	N	N/A	N/A	N
Fuel Filtration	N/A	N/A	Y	N/A	N/A	Y
Pulse Combustion	Y	Y	N	Y	Y	N
Air-Atomized Burner with Modulation	N/A	N/A	Y	N/A	N/A	Y
Delayed Action Oil Pump Solenoid Valve	N/A	N/A	Y	N/A	N/A	Y
Increased Motor Efficiency	Y	Y	Y	Y	Y	Y
Increased Blower Impeller Efficiency	Y	Y	Y	Y	N/A	N/A
Self-Generation of Electricity	N	N	N	N	N	N
Fuel-Driven Heat Pumps	N	N	N	N	N	N
Flue Gas Recirculation	N	N	N	N	N	N

Y The design option is applicable to this product class and passes screening.
N The design option has been screened out from further analysis for this product class.
N/A The design option is not applicable to this product class.
b Already included in the baseline model design (*see* section C.2)

C. Engineering Analysis

The purpose of the engineering analysis is to estimate according to the DOE test procedure the energy savings potential from increased equipment efficiency levels, and to determine the incremental equipment and installation cost of achieving those levels, compared to the baseline model in each product class. The engineering analysis estimates the payback period for each of the design options in order for DOE to address the legally required ''rebuttable'' payback consideration. The Department uses the costs developed in the engineering analysis in the LCC analysis.

1. Approach

There are a large number of ways to combine design options in furnaces and boilers to attain a particular efficiency level. To explore how manufacturers would likely design products to meet a standard and to thoroughly understand the relationships between different equipment configurations and efficiency, the Department considered several design options that could meet a given efficiency level. For the engineering analysis, DOE selected the design options considered most likely to be implemented.

The baseline model for each product class is the starting point for analyzing technologies that provide energy-efficiency improvement. The Department defined a baseline model as an appliance having the commonly available, most-cost-effective features and technologies while meeting the current efficiency standard. The Department defined a baseline model for each of the product classes in the first and second categories described above.

After identifying the baseline models, the Department estimated the total cost of higher-efficiency units to the consumer through an analysis of manufacturer costs, markups, and installation costs. Costs for equipment design options are determined through tear-downs. Markups are estimated using publicly available corporate and industry data, supplemented by data from the Manufacturing Housing Institute. The Department created an ''Installation Model'' to assess venting costs, and verified it against known existing data.

2. Baseline Models

Identification of the baseline for an equipment product class requires establishing a baseline efficiency level and selecting a size typical of that equipment. For furnace and boilers, the analysis also requires defining major design features, such as the configuration (which refers to the design of the supply air pathways), heat exchanger type, ignition type, and the means of heating fluid delivery (draft type).

Several stakeholders submitted comments on recommended furnace and boiler baseline model characteristics. ACEEE commented that the Department should use the sales-weighted median size as the baseline model size in each product class. (ACEEE, No. 15 at p. 5) AGA commented that the Department should

consider baseline models that include a range of building loads, airflows, regional heat demands, ignition system alternatives, and other technical variables. (AGA, No. 11 at p. 6)

For each product class, GAMA provided specific recommendations for the features of the baseline model. For example, for the baseline non-weatherized gas furnace, GAMA recommended that the baseline should have an AFUE of 78 percent (the statutory minimum efficiency), 75 kBtu/h (thousand Btu per hour) input, an induced draft combustion system, electric (hot surface) ignition, and a blower for three-ton cooling. (GAMA, No. 8 at p. 1) Trane commented that the baseline gas furnace should have electronic ignition, an induced draft, a 75 kBtu/h input, 1200 CFM at 0.5″ static pressure, and a three-ton air-conditioning capacity. (Trane, No. 9 at p. 1)

For the baseline oil-fired furnace, Lennox suggested that DOE use a 120 kBtu/h size. (Lennox, No. 16 at p. 1) GAMA recommended that the baseline have an input of 105 kBtu/h, which is the most common in the current market. (GAMA, No. 8 at p. 3)

MHI suggested that the baseline model for mobile home furnaces should have sealed combustion, a downflow configuration, and an inside thermal envelope footprint of less than 20 inches by 24 inches. (MHI, No. 13 at p. 1)

GAMA recommended that the gas boiler baseline model should have an atmospheric burner, a standing pilot, and an electro-mechanical vent damper and an input of 105 kBtu/h. (GAMA, No. 8 at p. 3) For the oil-fired boiler baseline model, GAMA recommended a boiler with a power burner and an input of 140 kBtu/h. (GAMA, No. 8 at p. 3)

In defining the baseline models, the Department took into account the above comments, as well as the technical description of the covered equipment, the definition of the product classes, and the results of the market assessment. DOE used the product features suggested by GAMA in the baseline definition, since they were consistent with most of the relevant stakeholder comments. Table II.3 summarizes the main features of the baseline models. For more detail on baseline equipment, refer to the Engineering Analysis, section 6.3 of the ANOPR TSD.

TABLE II.3.—FEATURES OF FURNACE AND BOILER BASELINE MODELS

Product class	Input capacity (Btu/h)	AFUE (%)	Configuration	Heat exchanger type	Ignition	Draft
Non-weatherized Gas Furnaces.	75,000	78	Upflow	Clam Shell/Tubular	Hot Surface	Induced.
Weatherized Gas Furnaces.	75,000	78	Horizontal	Clam Shell/Tubular	Hot Surface	Induced.
Mobile Home Gas Furnaces.	70,000	75	Downflow	Drum	Standing Pilot	Natural.
Non-weatherized Oil-Fired Furnaces.	105,000	78	Upflow	Drum	Intermittent Ignition	Forced.
Hot Water Gas Boilers	105,000	80	N/A	Sectional, Dry-base, Cast-iron.	Standing Pilot	Natural.
Hot Water Oil-Fired Boilers.	140,000	80	N/A	Sectional, Wet-base, Cast-iron.	Intermittent Ignition	Forced.

In addition to the above features, the baseline models have a blower or pump driven by a standard permanent split capacitor (PSC) induction motor.

3. Design Option Selection

From the list of options that passed the screening analysis, DOE selected those design options considered most likely to be implemented. The Department assumed that manufacturers will incorporate design options that have the least cost to attain a given efficiency level. Cost and efficiency estimates were available for a broad array of design options. The Department used the relationship between cost and percent efficiency improvement to rank all the fuel-related design options. Two options were most favorable: increasing the heat exchanger area and increasing the heat exchanger transfer coefficient. In interviews with manufacturers, the Department confirmed that these choices were the most promising design options.

The Department also included modulation technology as another design option that can provide an AFUE improvement for some of the product classes. Based on currently available products in the market, DOE applied two-stage modulation to non-condensing and condensing equipment and applied step modulation only to condensing furnaces.

The Department also included consideration of the following design options:

1. Improved heat exchanger effectiveness through electrohydrodynamic enhancement of heat exchangers;
2. Condensate venting and disposal;
3. Atomizing oil burner with two-stage modulation; and
4. Heat exchanger size optimization for oil-fired equipment.

Section 6.4 of the ANOPR TSD further discusses the above design options.

4. Manufacturing Cost Analysis

There are three ways to estimate manufacturing costs: (1) The design option approach, reporting the incremental costs of adding specific design options to a baseline model; (2) the efficiency level approach, reporting incremental costs of achieving each level of energy efficiency improvement; and (3) the reverse engineering or cost-assessment approach, which requires a ''bottom-up'' cost assessment based on a detailed bill of materials for models that operate at particular efficiency levels.

The Department received a variety of recommendations on generating manufacturer cost estimates. ACEEE recommended using reverse engineering analysis. (ACEEE, No. 15 at p. 5) ASE commented that industry cost data lack transparency and credibility and suggested that the Department use reverse engineering as the primary data source. (ASE, No. 18 at p. 2) ODOE stated that manufacturer-supplied costs have been consistently (sometimes significantly) high, and suggested that DOE not rely on this single source. (ODOE, No. 10 at p. 4) EEI recommended that DOE not disregard industry cost data. (EEI, No. 6 at p. 2) Southern Co. supported the use of industry cost data rather than reverse engineering numbers. (Southern, No. 14

at p. 4) Trane recommended the efficiency level approach because: (1) There is no good simulation model available for all designs; (2) feasible design options are limited; (3) DOE should specify a performance standard, not a design standard; and (4) GAMA can gather accurate cost data. (Trane, No. 9 at p. 2) GAMA commented that if DOE gets manufacturer cost information directly from manufacturers, it should provide draft aggregate cost data so GAMA can confirm the reasonableness of the data. (GAMA, No. 8 at p. 1)

Several comments suggested that DOE should consider historical trends or forces in estimating the retail price of equipment that would meet standards in the future. NRDC said DOE should include the ''learning curve'' effect that would come from greater cumulative production of higher-efficiency models. (NRDC, No. 21 at p. 2) ACEEE said that given historical trends and significant cost-reduction accomplishments of manufacturers, it is conceivable that they can produce higher equipment efficiency without significant increase in retail prices. (ACEEE, No. 15 at p. 5) NRDC, ACEEE, and CEC commented that actual equipment price increases have been lower than DOE's projected increases in past rulemakings. (NRDC, No. 21 at p. 3; ACEEE, No. 15 at p. 4; CEC, No. 19 at p. 4) ACEEE urged DOE to review the accuracy of past price impact projections for regulated products. (ACEEE, No. 15 at p. 4) Trane suggested that the best way to understand retail prices is to get several hundred quotes covering a variety of regions, installation types, efficiency levels, and ranges of capacities. (Trane, No. 9 at p. 2)

For other rulemakings, the Department has used production input costs and production technologies based on the best information available at the time. DOE has not made any assumptions about productivity improvements and material cost changes that may occur over time. The Department does not believe it can apply historical trends for residential furnaces or other products to forecast equipment costs where there are no data to show that the trends will continue. Therefore, the Department will not assume a productivity improvement factor in this rulemaking.

After assessing the available methods and taking stakeholder comments into account, the Department used reverse engineering of existing products to estimate the manufacturing cost of the baseline model and the considered design options. The Department believes that the reverse engineering approach, which is based on a detailed bill of materials (BOM) for the various models, is the best way to accurately and cost-effectively assess manufacturing costs. The Department supplemented this approach with a review of relevant literature, computer simulation, and other analytical techniques, as well as industry-supplied data. Throughout the analysis period, the Department provided GAMA, manufacturers, and other stakeholders several opportunities to review and comment on the cost estimates to ensure accuracy and completeness. The Department considered these comments in its analysis. Refer to section 6.4 of the ANOPR TSD for further discussion of the method used for analysis of manufacturing costs.

In estimating production costs for each potential efficiency (AFUE) level above the baseline model, the Department considered several design options that can be used to reach a given AFUE level. The Department also considered additional options that provide electrical power savings. The Department determined the efficiency levels corresponding to various design option combinations using manufacturer data submittals and DOE engineering calculations.

The Department generated the BOM by examining and disassembling (through teardown analysis) some current-market units and/or simulating design options using numerical models and creating ''hypothetical'' units that it costed as if they were real units. (In the context of this study, the terms ''reverse engineering'' and ''teardown analysis'' solely describe the estimation of production costs by examining actual equipment or designs.) The availability of a large number of residential products with a wide range of efficiency allowed DOE to consider all potential design options in a reverse-engineering approach in order to establish an accurate estimate for production costs. The Department purchased and disassembled by hand the selected units and measured, weighed, and analyzed each part. Additionally, DOE studied and reconstructed all the steps of the manufacturing processes to finish the teardown analysis. The result was detailed BOMs that DOE used as input to the cost model.

The analysis required the Department to perform teardowns at a number of efficiency levels. Multiple teardowns per point were needed to capture major design approaches. To reduce the number of possible teardowns to a manageable level, the Department focused on representative sample units sold in high volumes. Thus, the sample units included in the teardown analysis do not represent all possible efficiency levels of each product class. DOE took the following steps in creating BOMs for additional efficiency levels: (1) Identify efficiency gaps; (2) Select the most promising design options; (3) Identify possible design modifications of existing units and create a written description of ''hypothetical'' (or ''theoretical'') units; (4) Perform simulations to correlate design modifications with efficiency levels; and (5) Create BOMs for ''hypothetical'' units.

The cost model is based on production activities and divides factory costs into the following categories: (1) Material (direct and indirect materials); (2) Labor (fabrication, assembly, indirect and overhead burdened labor); and (3) Overhead (equipment depreciation, tooling depreciation, building depreciation, utilities, equipment maintenance, rework).

The Department used the cost data from all BOMs—whether obtained through teardowns or numerical simulations—in the cost model, which makes use of specific assumptions to provide cost estimates. These assumptions include industry averages for site-specific inputs (*e.g.*, labor rates), assuming the production facility is a ''greenfield'' plant (as if a new manufacturing plant were built) and assuming production volumes similar to current levels for each product class.

Even after completion of both the teardown analysis on representative units and the numerical simulations, the Department still needed information for condensing boilers (both gas- and oil-fired) and condensing mobile home furnaces. For these categories, DOE identified possible design options but did not have a methodology or a simulation tool in place to estimate the production costs. Therefore, the Department used a cost-per-pound estimation methodology for these products.

In summary, the Department took the following steps in establishing manufacturing costs as a function of fuel efficiency:

(1) Generate BOMs for products at different efficiency levels using teardown analysis and numerical simulations;

(2) Enter BOMs into a cost model, incorporating assumptions obtained through available industry data, internal expertise, visits to manufacturers, and stakeholders' input;

(3) Perform sensitivity analysis and cost-per-pound estimates; and

(4) Generate cost-efficiency data for each efficiency level.

Tables II.4a–f show the estimated incremental manufacturing costs of increasing AFUE for each product class. The reported efficiency levels are generally achieved by increasing heat exchanger area or improving the heat transfer coefficient. The incremental costs in the tables are relative to the baseline model for each product class.

For the modulation design option, the Department considered a design approach currently in the market that uses a multiple-tap, multiple-speed PSC blower motor; a two-stage gas valve; and a multiple-tap, two-speed PSC inducer motor to achieve two-stage modulation operation. For this design, DOE estimated that an additional $23 would be added to the production cost of the furnace to account for the component changes. The Department estimated that the AFUE improvement for adding two-stage modulation to a furnace would be 1 percent, based on a survey of units with and without modulation in the GAMA directory. Therefore, to estimate the cost of a modulating furnace at 81 percent AFUE, DOE added $23 to the production cost of a 80 percent AFUE furnace. An amendment to the current test procedure may be necessary to more completely characterize the energy savings from modulation. See Chapter 6 of the TSD for further details.

TABLE II.4A.—INCREMENTAL MANUFACTURING COST FOR NON-WEATHERIZED GAS FURNACES

Efficiency level (AFUE) %	Incremental cost
78 Baseline Model	0
80	$3
81	6
82	9
90	146
92	213
96	570

TABLE II.4B.—INCREMENTAL MANUFACTURING COST FOR WEATHERIZED GAS FURNACES

Efficiency level (AFUE) %	Incremental cost
78 Baseline Model	0
80	$3
81	6
82	9

TABLE II.4C.—INCREMENTAL MANUFACTURING COST FOR MOBILE HOME GAS FURNACES

Efficiency level (AFUE) %	Incremental cost
75 Baseline Model	0
80	$29
81	36
82	46
90	140

TABLE II.4D.—INCREMENTAL MANUFACTURING COST FOR OIL-FIRED FURNACES

Efficiency level (AFUE) %	Incremental cost
78 Baseline Model	0
80	$2
81	5
82	7
84	10
85	15

TABLE II.4E.—INCREMENTAL MANUFACTURING COST FOR HOT-WATER GAS BOILERS

Efficiency level (AFUE) %	Incremental cost
80 Baseline Model	0
81	$29
82	39
83	47
84	55
88	128
91	379
99	816

TABLE II.4F.—INCREMENTAL MANUFACTURING COST FOR HOT-WATER OIL-FIRED BOILERS

Efficiency level (AFUE) %	Incremental cost
80 Baseline Model	0
81	$4
82	7
83	11
84	15
86	22
90	434
95	836

The Department also identified options that decrease electricity consumption in furnaces and boilers. The details are described in Appendix 8.5 of the TSD.

5. Markup Analysis

Completing the equipment cost calculations in the engineering analysis requires determination of the cost to the customer of a baseline model furnace or boiler and the cost of more efficient units. The average customer price of such units is not generally known. To estimate the equipment costs to the customer, DOE determined typical markups on each stage of the distribution chain from the manufacturer to the consumer. The markup approach makes it possible to estimate a retail price from the manufacturing cost. In addition to estimating average markups, the Department also characterized the markups with probability distributions through a statistical analysis of U.S. Census data and used these distributions in the LCC analysis.

The Department included the following expenses in the determination of the manufacturer markup: Research and development, net profit, general and administrative, warranty expenses, taxes, and sales and marketing. The estimated average markup of 1.26 was based on analysis of corporate financial records. The Department excluded shipping expenses (out-bound) because these expenses were included in the manufacturing cost. Research and development expenses were determined by assuming that engineering budgets would be reallocated from value-engineering and new-feature development to product development and redesign. The additional capital outlays and re-tooling investments are captured in the incremental cost of the equipment.

The Department based the wholesale and contractor markups on firm balance sheet data. Builder markup (applied to new construction installations only) was estimated from U.S. Census data for the residential and commercial building construction industry and from HVAC industry data. Recent state and local sales tax data were used to estimate sales taxes (applied to replacement installations only).

An exception to the above procedure was the case of mobile home furnaces, where the distribution chain is shorter; the heating equipment manufacturer sells to the mobile home maker, who installs the furnace at the factory. In this case, the Department estimated markups using information from the Manufacturing Housing Institute.

The estimated average markups are listed in Table II.5. The markup on incremental costs (relative to a baseline model) is lower than the markup on the baseline model cost for wholesalers and

contractors because only profits and other operating costs typically scale with the manufacturer price or (for contractors) the cost of goods sold. The overall markups are lower for new construction installations than for replacement installations, since different markups apply. For more detail on how the Department developed the markups, refer to Chapter 5 of the ANOPR TSD.

TABLE II.5.—AVERAGE MARKUPS ON COSTS OF RESIDENTIAL FURNACES AND BOILERS

	Baseline model cost	Incremental cost
Manufacturer	1.26	1.26
Wholesaler	1.36	1.11
Contractor (new/replacement)	1.41/1.62	1.22/1.33
Builder (new construction only)	1.43	1.33
Sales tax (replacements only)	1.07	1.07
Total markup (on manufacturing cost)		
Non-weatherized gas furnace	3.12	2.07
Weatherized gas furnace	3.12	2.07
Oil-fired furnace	2.97	1.99
Hot-water gas boiler	2.97	1.99
Hot-water oil-fired boiler	2.97	1.99
Mobile home gas furnace	2.22	2.22

6. Installation Cost

The installation cost is the cost to the consumer for installing a furnace or a boiler; it is usually not part of the retail price. The cost of installation covers all labor and material costs associated with the installation of a new unit or the replacement of an existing one. For furnaces and boilers, the installation cost is the largest single component of the total cost to the consumer. It is even larger than the equipment cost.

The predominant part of the installation cost is the venting system. The American National Standards Institute (ANSI) standard Z21.47–1993 defines four Categories (I–IV) for furnace or boiler venting systems. The categories are defined based on the operating pressure and temperature in the vent. Most non-condensing equipment operates with a Category I (high temperature, low pressure) venting system. Most condensing equipment operates with a Category IV (low temperature, high pressure) venting system, but some condensing boilers use a Category III (high temperature, high pressure) system. For a Category I venting system only, the 2002 National Fuel Gas Code (NFGC) Venting Tables 13.1 through 13.5 define the requirements for installation.

DOE devoted considerable effort to identifying appropriate costs to use in its analysis. In the process, DOE found that there is no complete data source for installation costs for the product classes under consideration. ACEEE suggested that DOE collect data from the field to help in estimating the cost of various types of installations. (ACEEE, No. 32 at p. 3) The Department concurs that this would be beneficial and will consider this approach if appropriate data are available. The Department hereby requests submittal of field installation cost data.

One source of data is a 1994 GRI report, which GAMA supplemented in 2002 with an updated summary version of the data. The installation costs in the GRI report were developed from the results of a field survey which several gas utilities conducted in 1992. These data are relatively old and, particularly for condensing furnaces, may not represent a well-established market. Differences between new and replacement installation costs may be underestimated. Further, no detailed cost breakdowns are available from the report for independent verification of the results.

A second source is a 1999 Natural Resources Canada (NRCanada) study that developed installation cost data for non-weatherized gas furnaces for four Canadian areas. A company that provides cost estimates for building contractors conducted the study. The NRCanada study provides the most current data set available, and the data are used by Canadian government agencies and are well documented. However, for condensing furnaces, there are indications that these data are applicable only to new-construction installations.

The Department looked at other possible sources of installation costs, including data from Wisconsin from a 1999 survey of HVAC contractors. The Department did not use these data because of the very small size of the sample.

Because of the shortcomings of the above sets of data, DOE performed its own study to determine installation costs for non-weatherized gas furnaces, referred to henceforth as the ''Installation Model.'' The Department has posted the Installation Model spreadsheets for furnaces and boilers on its Web site: *http://www.eere.doe.gov/buildings/appliance_standards/furnaces_boilers.html.*

The Department used RS Means, a well-known and respected construction-cost-estimation method, to develop labor costs, and got quotes from national distributors to develop material costs. The Installation Model weight-averages the detailed costs for a large variety of typical installations in the field, including both new construction and retrofit installations; single and multifamily housing; plastic, metal and masonry chimney vents; single- and double-wall vent connectors; and common venting with other appliances. Chimney relining practices and orphaned water heaters are explicitly modeled. The Department validated the Installation Model results by comparing them with the preceding three data sets under equivalent assumptions; the incremental costs agree within 15 percent. The Department is requesting comments about the Installation Model (see Issue 1 under ''Issues for Public Participation'' in section IV.E of this ANOPR).

a. Non-Weatherized Gas Furnaces

For non-weatherized gas furnaces, DOE considers the data derived with the Installation Model as the most current and comprehensive available for the analysis. It used a sensitivity analysis based on variations of installation size. The GAMA and NRCanada data sets also provide a basis for upper and lower bounds for installation cost.

The Department determined that there is a small additional average installation cost for an 80 percent AFUE furnace relative to a baseline (78 percent AFUE) furnace. This cost involves the need to reline some masonry chimneys and applies to single-stage, as well as modulating, furnaces.

When efficiency increases above 80 percent AFUE, additional costs associated with venting system modifications may be necessary.

At the DOE Venting workshop in May 2002, the differences between steady-state efficiency (SSE) and AFUE were discussed in detail. Lennox and GAMA commented that installations in accordance with NFGC Venting Table rules may sometimes exceed the expected SSE, and recommended DOE apply a margin of safety to the SSE/AFUE relationship. (Lennox, No. 35 at p. 2; and GAMA, No. 31 at p. 2) Lennox also said that some installation locations will yield operating conditions that differ substantially from test conditions. (Lennox, No. 35 at p. 2) Reflecting these concerns, DOE's approach to determining the SSE/AFUE relationship includes an uncertainty range for the

fraction of installations at each efficiency level that would likely need a Category III venting system. DOE used the GAMA directory to develop data on the AFUE/SSE relationship.

Several stakeholders commented that the SSE/AFUE relationship is not affected by differences in the type of furnace heat exchanger (tubular vs. clamshell). (Public Workshop Tr., No. 25JJ at p. 68; GAMA, No. 31 at p. 6; and York, No. 33 at p. 3) DOE did not consider the type of furnace heat exchanger when evaluating the SSE/AFUE relationship.

For the 81 percent AFUE level, DOE considered two cases for installation cost. The first assumes the use of two-stage modulation technology. At present, two major manufacturers produce furnaces with 81 percent AFUE using modulation technology that allows use of a Category I venting system. By investigating existing models and manufacturers' installation manuals, the Department determined that these furnaces must use Type B double-wall vent connectors in the venting system.

The second case considers only the use of single-stage furnace models. The Department determined that at an energy efficiency of 81 percent AFUE, about 8 percent of the existing single-stage furnace models would have an SSE above 83 percent. At this SSE level, condensation in the venting system may occur, possibly leading to corrosion and carbon monoxide leakage. In this case, DOE assumed that 8 percent of installations would need a Category III stainless steel vent to allow safe operation. The remaining 92 percent would need to use Type B double-wall vent connectors in the venting system. For the 82 percent and 83 percent AFUE levels, DOE determined that 35 percent and 100 percent of units, respectively, could be above 83 percent SSE, and these units would need a Category III venting system for safe operation.

Condensing furnaces at 90 percent AFUE use a Category IV venting system, which is mostly composed of a side-wall venting system with plastic vent pipes. For condensing furnaces, the Installation Model accounts for the installation of a new vent system, resizing of the remaining common system, condensate neutralization, and condensate pumping for disposal. The Department assumed that installation costs for all condensing furnaces are similar, since available information suggests that efficiency levels higher than 90 percent do not appreciably affect the installation cost for condensing gas furnaces.

Simpson and GAMA commented that DOE should account for costs of handling the condensate disposal. (Simpson, No. 30 at p. 3; and GAMA, No. 8 at p. 1) The installation cost for condensing furnaces includes the cost of condensate disposal.

The Department's installation cost estimates are shown in Table II.6a. The cost data are presented in 2001 dollars to coincide with the manufacturing cost estimates.

TABLE II.6A.—INSTALLATION COST FOR NON-WEATHERIZED GAS FURNACES

Efficiency level (AFUE) (percent)	NRCanada (US $)	Installation Model (US $)	GRI (US $)
78—Baseline Model	382	727	773
80	382	731	965
81—two-stage, no Category III	382	760	965
81—single-stage, 8 Category III	432	810	1,104
82	634	1,012	1,671
83	1,012	1,356	2,732
90	411	980	1,239
93 and above	411	980	1,268

b. Other Product Classes

For weatherized gas furnaces, the location of the equipment (outdoors) influences the installation cost. Based on RS Means, the Department estimated a mean of $1,123 for the installation cost of the baseline model. Since limited data were available, DOE assumed that installation cost remains mostly constant as efficiency is increased. This assumption seems reasonable for single-package systems, as the increases in size and weight for more efficient, single-package systems are small relative to the large size and weight of the baseline model.

For mobile home gas furnaces, common installation costs are part of the equipment cost because mobile home gas furnaces are assembled in the factory rather than in the field. The manufacturer's markup includes these factory assembly costs. For 90 percent and over AFUE condensing furnaces, there is an additional installation cost in the field to account for condensate disposal systems.

DOE modified the Installation Model to estimate venting costs for oil-fired furnaces, hot-water gas boilers, and oil-fired boilers (see Chapter 6 of the TSD for details). For gas boilers, NFPA 54 provides Category I venting guidelines; for oil-fired appliances, the applicable venting guideline is NFPA 31. However, the efficiency level at which the use of higher-cost Category III venting becomes necessary is not defined by these codes. For the analysis of gas boilers, DOE assumed that 20 percent of installations include Category III horizontal vents for construction-related reasons for efficiencies up to 84 percent AFUE. At 85 percent AFUE, DOE assumes Category III venting must be used 100 percent of the time. For oil-fired equipment, type L stainless venting is required at all AFUE levels. DOE assumes that the vent system must be upgraded to stainless AL–4C at 85 percent and 84 percent AFUE for oil-fired boilers and oil-fired furnaces, respectively.

The Department's installation cost estimates are shown in Table II.6b through II.6f. The cost data are presented in 2001 dollars to coincide with the manufacturing cost estimates.

TABLE II.6B.—INSTALLATION COST FOR WEATHERIZED GAS FURNACES

AFUE (percent)	Average cost ($)	Incremental cost ($)
78	1,123	—
80	1,123	0
81	1,123	0
82	1,123	0

TABLE II.6C.—INSTALLATION COST FOR MOBILE HOME GAS FURNACES

AFUE (percent)	Average cost ($)	Incremental cost ($)
75	0	—
80	0	0
81	0	0
82	0	0
90	181	181

TABLE II.6D.—INSTALLATION COST FOR OIL-FIRED FURNACES

AFUE (percent)	Weighted average cost ($)	Incremental cost ($)
80	751	—
82	751	0
83	751	0
84	1,641	890
85	1,641	890

TABLE II.6E.—INSTALLATION COST FOR HOT-WATER GAS BOILERS

AFUE (percent)	Weighted average cost ($)	Incremental cost ($)
80	1,679	—
82	1,679	0
83	1,679	0
84	1,679	0
85	2,833	1,154
90+	2,091	412

TABLE II.6F.—INSTALLATION COST FOR HOT-WATER OIL-FIRED BOILERS

AFUE (Percent)	Weighted average cost	Incremental cost
80	$1,631	—
84	1,631	0
85	2,556	$925
86	2,556	925
90	2,091	460

c. Safety and Reliability Issues Related to Installation

Several stakeholders expressed concerns about safety and reliability issues associated with condensation problems that may arise with higher-efficiency furnaces and boilers. For non-weatherized gas furnaces, GAMA and NPGA stated that 83 percent SSE, which corresponds to an AFUE of 80–82.5 percent, is recognized as the threshold above which condensation may occur. (Public Workshop Tr., No. 25JJ at p. 162; and NPGA, No. 29 at p. 2) Lennox said that safety and reliability prevent manufacturers from selling products with an AFUE between 81 percent and 90 percent, and even 81 percent AFUE furnaces are not sold in all geographic regions. ((Public Workshop Tr., No. 25JJ at p. 97) The few non-condensing furnaces sold with an AFUE over 81 percent are intended for specialized applications. (Public Workshop Tr., No. 25JJ at p. 97) Carrier commented that furnaces with an AFUE of 81 to 82 percent were widely available in the 1980's and experienced numerous venting and corrosion problems. (Carrier, No. 7 at p. 1) Lennox recommended that the Department's analysis should not consider gas-fired equipment between 81 percent and 90 percent AFUE because of the difficulties in ensuring the safe operation of furnace and venting systems for the maximum useful life of the equipment. (Lennox, No. 16 at p. 1) Trane said that the fact that there are no available products with AFUE values between 82 percent and 90 percent is a very important indicator of the existing efficiency range that allows for satisfactory margins of safety. (Trane, No. 34 at p. 1) ACEEE maintains that 83 percent AFUE is technically feasible without significant risk of corroding the heat exchanger. (ACEEE, No. 15 at p. 2)

For furnaces with an AFUE in the range of 81–83 percent, the Department evaluated the impact of condensate on vent systems. Based on the common practice with higher efficiency gas boilers, the Department determined that the use of Category III venting systems can adequately address safety concerns at these AFUE levels. The Department included costs for installing Category III venting systems where the analysis determined they would be needed. Refer to section 6.5 of the ANOPR TSD for further discussion.

Battelle urged DOE to take into account the increased liabilities that may arise with higher efficiency. (Public Workshop Tr., No. 25JJ at p. 215) GAMA said that DOE must consider the risks and costs associated with venting and corrosion problems. (GAMA, No. 31 at p. 2) Trane said that increasing the AFUE above 81 percent would place an undue burden on manufacturers to protect customer safety. (Trane, No. 33 at p. 1) DOE addressed this issue by assigning Category III venting systems to an appropriate fraction of installations, thus capturing the costs associated with ensuring safe operation of higher-efficiency furnaces.

For condensing furnaces, GAMA recommended that the Department consider in its analyses regional and local building code requirements concerning venting materials and practices. GAMA also mentioned the problems with less expensive plastic materials, such as high temperature plastic vents (HTPV), to vent exhaust gases, which resulted in a recall by the U.S. Consumer Product Safety Commission, and cautioned DOE about the appropriate use of materials and approaches to reduce condensation problems (*e.g.*, vent coating, vent pre-heating, new materials, improved vent-connectors). (Public Workshop Tr., No. 25JJ at p. 174) The Department used the appropriate venting practices for condensing furnaces in its analysis and only considered materials commonly used in existing equipment designs.

Several stakeholders commented about including in DOE's analysis the cost of upgrading the venting system due to increased efficiency. ACEEE recommended that the Department include costs to address the risks to the venting system. (ACEEE, No. 15 at p. 2) GAMA commented that costs must reflect installation in complete compliance with all manufacturer instructions and code requirements, including extra installation costs for relining or resizing non-compliant venting systems for orphaned water heaters. (GAMA, No. 8 at p. 3) GAMA also said that DOE needs to consider costs of upgrade or repair when the furnace is no longer vented using a Category I system. (Public Workshop Tr., No. 25JJ at p. 87) York said DOE should consider that a large percentage of replacement furnaces are installed where masonry chimneys are used (thereby requiring chimney upgrade), and another large segment of installations use common venting with water heaters. (York, No. 33 at p. 3) GAMA and NPGA commented that the new efficiency standards for water heaters will contribute to the condensation problem because many furnaces and water heaters are vented in a common system. (Public Workshop Tr., No. 25JJ at p. 174; and NPGA, No. 35 at p. 2) ACEEE urged DOE to improve the understanding of this issue. (ACEEE, No. 32 at p.4)

The Department included all costs for installations that are in complete compliance with manufacturer instructions and code requirements. This includes upgrades when the furnace is no longer vented using a Category I system, and changes to common venting systems. See Chapter 6 of the TSD for more details on assumptions regarding orphaned water heaters and common venting systems.

During the Framework Workshop, the Department proposed to investigate controls and sensors that prevent the development of condensation in the venting system. In its response, GAMA said that by the time a sensor or CO detector works, it is too late to prevent condensation. (Public Workshop Tr.,

No. 25JJ at p. 171) AGA said that some control strategies would have adverse safety and health impacts. (Public Workshop Tr., No. 25JJ at p. 177) DOE agrees with the above comments but did not evaluate different control strategies in this analysis because of the potential for adverse impacts on the safety and health of consumers.

York said that venting applications for mobile home heating equipment have their own special requirements and standards, which must be considered when determining the impact of efficiency requirements on venting issues. (York, No. 33 at p. 3) The venting system of mobile home heating equipment is assembled in the factory as part of the mobile home construction, and its cost is included in DOE's markup analysis for this product class.

GAMA said that DOE should investigate corrosion and venting issues related to boilers. (GAMA, No. 31 at p. 4) DOE included in this analysis the cost of appropriate venting of higher-efficiency equipment for boiler product classes.

As this brief discussion makes clear, several stakeholders have expressed concerns that requiring higher-efficiency furnaces and boilers could result in situations where condensation could create safety problems for consumers. In addition, stakeholders have expressed concern about the use of special non-corrosive materials as well as controls and sensors to prevent condensation in the vent system. DOE believes that it has adequately addressed the safety issue by assigning Category III venting systems to an appropriate fraction of the installations in its analysis. This approach captures the costs associated with ensuring safe operation of higher-efficiency furnaces. DOE has also accounted for the effectiveness of materials as applicable to this analysis. As noted above, the Department did not consider controls and sensors to prevent condensation because of the adverse safety and health impacts on consumers.

7. Maintenance Costs

Maintenance costs include regular maintenance and repair of a furnace or a boiler when it fails. They cover all associated labor and material costs. For the discussion of the analysis of maintenance costs, refer to section 6.6 of the ANOPR TSD.

For non-weatherized and weatherized gas furnaces and gas boilers, DOE used maintenance cost data from a 1994 GRI report. The data came from a field survey sponsored by several gas utilities that repair and service furnace and boiler equipment. The survey methodology estimated the average cost per service call as the average total service charge.

The GRI study also developed the maintenance frequency as a function of the equipment efficiency level: once every four years for 80 to 81 percent AFUE equipment and once every three years for 82 to 83 percent AFUE equipment. For 90 percent and 92 percent AFUE equipment, the maintenance value represents a service contract that includes a specified set of routine repairs. The 96 percent AFUE furnace also includes a service contract that provides for regular annual maintenance. The Department annualized the costs over the estimated lifetime of the furnace (*see* Table II.7).

TABLE II.7.—ANNUALIZED MAINTENANCE COST FOR GAS FURNACES AND BOILERS

AFUE	Mean cost ($)
81% and less	35
82–83%	58
90% and 92%	61
96%	102

For oil-fired furnaces and oil-fired boilers, DOE applied the results of a survey performed for the water heater rulemaking. This survey identifies the typical cost of annual service contracts applied to all oil equipment in a house. These contracts are very common in the Northeast, where most of the oil heating equipment is located. The mean cost of an annual service contract for all considered efficiency levels is $104.

For mobile home furnaces, DOE used the data from the 1993 rulemaking for this product class. It also identified an additional maintenance cost needed for the design options considered in this analysis.

GAMA commented that the added components and complexity of modern furnaces bring increased maintenance and repair costs. (GAMA, No. 8 at p. 3) ACEEE commented that continuing pressures to increase quality and reduce time and training for maintenance should be able to check increases in such costs. (ACEEE, No. 15 at p. 6) DOE believes that the maintenance costs used in the analysis reflect the best currently available data.

8. Summary of Inputs

Table II.8 summarizes the inputs used to calculate rebuttable payback periods for various energy efficiency levels.

TABLE II.8.—SUMMARY OF INPUTS USED IN THE ENGINEERING ANALYSIS

Input	Description
Equipment Cost	Uses a cost model of baseline model manufacturing costs created by tear-down analysis; design option analysis was used to fill gaps. Industry feedback from GAMA and individual manufacturers was incorporated to generate manufacturing cost versus efficiency curves for primary and secondary classes.
Markups	Markups are derived from an analysis of corporate financial data. Manufacturing costs are multiplied by manufacturer, distributor, contractor, and builder markups, and sales tax, as appropriate, to get equipment price.
Installation Cost	Uses a distribution of weighted-average installation costs from the "Installation Model." Installation configurations are weight-averaged by frequency of occurrence in the field, and vary by installation size. The Installation Model is RS Means-based, and comparable to available known data.
Maintenance Costs	Uses GRI data for gas furnaces and boilers, water heater rulemaking survey results for oil-fired equipment, and data from the 1993 rulemaking for mobile home furnaces.
Annual Energy Use	Energy use is calculated using the DOE test procedure.
Energy Prices	AEO 2003 forecast prices for year 2012.

9. Rebuttable Payback Periods

Section 325(o)(2)(B)(iii) of the Act, 42 U.S.C. 6295(o)(2)(B)(iii), establishes a rebuttable presumption that a standard is economically justified if the Secretary finds that "the additional cost to the consumer of purchasing a product complying with an energy conservation standard level will be less than three times the value of the energy * * * savings during the first year that the consumer will receive as a result of the

standard, as calculated under the applicable test procedure * * * ''

Using the cost inputs described above, combined with energy calculations under the DOE test procedure, the Department calculated simple payback periods for each efficiency level using the ratio of incremental total installed cost to the change in the annual operating cost (*see* Table II.9). Refer to section 6.7 of the ANOPR TSD for further discussion of the calculation methods. As can be observed in Table II.9 a number of efficiency levels higher than current standards have paybacks of less than three years. However, payback periods calculated based on energy consumption in actual field conditions may differ significantly. The LCC and Payback Period Analysis described in the following section reflects field conditions and is therefore a more accurate depiction of consumer impacts. The Department does not make a determination of economic justification based on the rebuttable payback presumption. Economic justification is based on a weighing of the seven factors described in section I.C of this ANOPR. A number of efficiency levels higher than current standards are economically justified by this metric. Payback periods calculated based on energy consumption in actual field conditions may differ significantly; the LCC analysis considers such conditions. Note that in the process of setting a standard, the Department weighs many factors in addition to the economic justification, as listed in section I.B of this ANOPR.

TABLE II.9.—EFFICIENCY LEVELS WITH LESS THAN 3-YEAR PAYBACK PERIOD USING DOE TEST PROCEDURE

Product Class	Efficiency Level (AFUE) (Percent)	Payback (years)
Non-weatherized Gas Furnace	80	1.0
Weatherized Gas Furnaces	80	0.6
	81	0.8
	82	0.9
Mobile Home Furnaces	80	2.8
Oil-fired Furnaces	80	0.2
	81	0.2
	82	0.2
	83	0.3
Hot-Water Oil-fired Boilers	81	0.4
	82	0.4
	83	0.4
	84	0.4

D. Life-Cycle Cost (LCC) and Payback Period (PBP) Analysis

When DOE is determining whether an energy efficiency standard is economically justified, EPCA directs DOE to consider the economic impact of potential standards on consumers. (42 U.S.C. 6295 (o)(2)(B)(i)(I)) To address that impact, the Department calculated changes in equipment life-cycle cost (LCC) for consumers that are likely to result from each candidate standard, as well as payback periods. The effects of standards on individual consumers include changes in operating expenses (usually lower) and changes in total installed cost (usually higher). The Department analyzed the net effect of these changes by calculating the changes in LCC compared to a base case forecast. The LCC calculation considers total installed cost (equipment purchase price plus installation cost), operating expenses (energy and maintenance costs), equipment lifetime, and discount rate. The Department performed the analysis from the perspective of the user of residential furnace and boiler products.

The LCC and PBP results are presented to facilitate stakeholder review of the LCC analysis. Similar to the LCC analysis, the PBP is based on the total cost and operating expenses. But unlike the LCC analysis, only the first year's operating expenses are considered in the calculation of PBP. Because the PBP analysis does not take into account changes in operating expense over time or the time value of money, it is also referred to as a ''simple'' payback period.

Trane commented that the LCC analysis does not reflect consumer purchasing behavior, which exhibits a preference for a simple payback of less than 3 years. (Trane, No. 9 at p. 3) As mentioned above, the Department calculated payback periods as well as LCCs, and takes both factors into account in determining the economic justification for each possible energy efficiency standard.

AGA commented that the LCC analysis should be the primary basis for economic justification. (AGA, No. 11 at p. 5) The Department will weigh all costs and benefits, including the LCC.

1. Approach

The LCC analysis estimates the LCC for representative equipment in houses that are representative of the segment of the U.S. population that is buying furnaces and boilers. The calculation of LCC is done for a representative sample of houses, one house at a time, using appropriate values for the inputs each time. To account for uncertainty and variability in specific inputs such as lifetime and discount rate, there is a distribution of values with probabilities attached to each value. For each house, DOE samples the values of these inputs from the probability distributions. As a result, the analysis produces a range of LCCs. A distinct advantage of this approach is that DOE can identify the percentage of consumers achieving LCC savings or attaining certain payback values due to an increased efficiency standard, in addition to the average LCC savings or average payback for that standard. Refer to section 8.1 of the ANOPR TSD for further discussion of the LCC analysis method.

The Department based the payback period calculations in the engineering analysis on the DOE test procedure. The test procedure uses specific, carefully prescribed values to calculate annual energy consumption. When the test procedure was written, these values were considered to be relatively typical of conditions in U.S. homes. In contrast, the LCC analysis estimates furnace and boiler energy consumption under field conditions for a sample of houses that is representative of U.S. homes. These conditions include the outdoor climates during the heating and cooling season,

which influence the operating hours of the equipment.

For each product class, the LCC analysis considers all candidate standard efficiency levels, as well as the maximum-efficiency technology available. To estimate the impact of improved efficiency across a wide range of households that use furnaces and boilers, DOE selected a sample of households from the 1997 Residential Energy Consumption Survey (RECS97). For each sampled household, DOE estimated the energy consumption of furnaces and boilers with baseline model design characteristics and design options that yield higher efficiencies. DOE then calculated the LCC for all design options.

To account for the uncertainty and variability in the inputs to the LCC calculation for a given household and between different households, the Department used a Monte Carlo simulation. A Monte Carlo simulation uses a distribution of values to allow for variability and/or uncertainty on inputs for complex calculations. For each input, there is a distribution of values, with probabilities (weighting) attached to each value. Monte Carlo simulations sample input values randomly from the probability distributions.

For each product class, DOE calculated the LCC and payback period 10,000 times per Monte Carlo simulation run. For some variables, such as energy price and climate, each calculation used the values associated with the sampled RECS house. The RECS houses were sampled according to the weighting each received from the Energy Information Administration (EIA). This weighting reflects the prevalence of various features in the national population of houses. Sampling according to the weighting means that some of the RECS houses are sampled more than once and others may not be sampled at all. The Department used Microsoft Excel spreadsheets with Crystal Ball, an add-on software, to perform the Monte Carlo analysis.

GAMA commented that the cost of using Crystal Ball to perform the Monte Carlo analysis makes it difficult for stakeholders to use. (GAMA, No. 41 at p. 7) DOE seeks to minimize the hardware and software necessary to duplicate its analysis. At the same time, it wishes to handle the issues of variability among impacts and uncertainty in data and projections as comprehensively and rigorously as possible. Changing to another tool at this time for the current analysis would entail significant costs and delays since the LCC analysis tool using Crystal Ball is finished. DOE will explore the suitability of other, less expensive, analysis tools for future rulemakings.

In addition, DOE has established a process for making the analysis results available to the public, including providing extensive documentation, posting the documentation and the LCC spreadsheet on the DOE Web site, holding informal meetings with stakeholders to walk them through the data and methods, publishing Technical Support Documents (TSDs), holding workshops, and receiving and responding to verbal and written comments.

GAMA commented that DOE's use of Monte Carlo analysis to select households at random from the RECS database has no statistical validity and is potentially misleading from a policy standpoint. It noted that the sampling method: (1) Ensures that not every RECS household is represented in the analysis and that many are represented more than once; and (2) subjects each household that is selected to only one combination of variables instead of the hundreds or thousands that are needed to fully characterize the uncertainty surrounding that household. (GAMA, No. 41 at p. 3)

GAMA's comment seems to directly criticize the use of the Monte Carlo methodology in general, rather than the correctness of DOE's particular application of it. The Monte Carlo method gives an adequate picture of the average policy affect on households, the variation in impacts over the housing stock, and the fraction of households likely to benefit from the standard. The systematic accuracy of the analysis for which the Monte Carlo simulation is used depends on the available data for each variable. Statistically, the degree to which the results of the simulation represent the full range of possible outcomes depends only on the sample size and can be judged using standard statistical techniques.

GAMA said that DOE should evaluate each RECS household independently and expose each household to the full range of uncertainty and variability expected in that household. GAMA said that DOE should calculate the distribution of possible financial impacts for each RECS sample household to identify a ''most likely'' financial result for that household as well as a distribution of results, expressed within confidence intervals, on either side of the most likely result. To determine the most likely financial affect on the typical U.S. household, DOE must then compute a weighted average of all most likely financial results from each individual distribution. (GAMA, No. 41 at p. 3)

It appears that GAMA is asking the Department to estimate the probability distribution of possible economic impacts on the specific households surveyed in RECS. DOE designed the LCC analysis to answer the question of what is the variation of economic impacts of a standard for a representative national sample of consumer households. The current analysis is not designed to evaluate specific impacts on individual households that were surveyed in RECS. DOE assumes a representative national distribution of households is selected when the Monte Carlo simulation samples a statistical distribution of households from the RECS data according to the EIA assigned weights. Many of the characteristics are attached to the households in the RECS database, *e.g.*, energy prices, size of house, vintage of existing heating equipment, and type of fuel. GAMA does not provide clear evidence that the national distribution of household characteristics constructed using this method is incorrect. Overall, DOE believes that the current method is appropriate because it uses parameters for each household that have a basis in measured or sampled data from that household.

For each product class, the base case forecast assumes that the purchase of equipment in the absence of new standards reflects current patterns with respect to efficiency. The Department sampled the AFUE of the base case forecast equipment assigned to each house from a distribution of AFUEs that is representative of current shipments. Thus, the sample houses vary in terms of their base case forecast equipment. The Department assigned to some houses base case forecast equipment that is more efficient than some of the design options. For those design options, DOE considered those houses as not being affected by the standard, since there would be no energy savings.

For a given set of design options, the LCC analysis provides a distribution of households that can be divided into those for whom the LCC will decrease compared to the base case forecast (positive benefit), those for whom the LCC will increase compared to the base case forecast (negative impact), and those for whom the LCC will not change because the design option is less efficient than the base case forecast for that house.

The Department received comments on regional issues that affect the LCC analysis. GAMA stated that DOE should examine whether costs for higher efficiency furnaces and boilers vary by region and consider regional differences in product use. (GAMA, No. 8 at p. 1)

AGA and EEI stated that the LCC analysis should consider regional differences among consumer populations. (AGA, No. 11 at p. 5; and EEI, No. 6 at p. 5) GRI stated that the Department should not extrapolate atypical regional data across all segments of the U.S. (GRI, No. 5 at p. 3) The Department recognizes that regional factors are important in the assessment of energy efficiency standards for heating equipment, and it evaluated the impact of regional variations as part of the LCC analysis.

Many consumers purchase heating equipment using some type of financing. GAMA commented that DOE has been deducting rather than adding financing costs in its analyses. (GAMA, No. 41 at p. 4) DOE's method accounts for the fact that purchases financed by credit card, mortgage, or other means are paid over time—not all at once. It discounts the value of those payments in the LCC calculation. Because DOE uses the financing cost interest rate as the discount rate, the present value of payments (including principal and financing costs) for consumers purchasing equipment over time is exactly the value of the equipment costs as if paid all at once.

2. First-Cost Inputs

For each efficiency level analyzed, the LCC analysis needs input data for the total installed cost of the equipment.

a. Equipment Prices

DOE derived equipment prices by multiplying manufacturer cost by manufacturer, distributor, contractor, and builder markups and sales tax, as appropriate. The LCC analysis draws on the engineering analysis for estimating manufacturing costs.

For non-weatherized gas furnaces, to represent the majority of combinations of input capacity and maximum-rated airflow, the Department developed conceptual (''virtual'') furnace models [5] to represent 26 different combinations of those two variables. Each virtual model had its own cost and energy characteristics. (Refer to Chapter 7 of the ANOPR TSD for more details about virtual models.) To develop the cost for each virtual model, DOE reverse-engineered one model size (input capacity = 75kBTU/h and airflow capacity = 3 tons) and assigned costs for the different components. The Department scaled the cost for other input capacities from the basic model cost for both non-condensing and condensing models. A cost adder adjusted costs for furnaces of different maximum nominal airflow capacity. The virtual models include models with the most commonly occurring input capacities, with corresponding maximum nominal airflow rates.

For weatherized gas furnaces, DOE used the same virtual models as in the analysis of non-weatherized gas furnaces. For mobile home furnaces and oil-fired furnaces, the Department used a subset of the 26 virtual furnace models because the market in those product classes is limited to a smaller number of sizes of furnaces. For the boiler product classes, DOE used the sizes of the virtual models for non-weatherized gas furnaces, weighted to match the boiler sizes in the shipments data from GAMA.

b. Installation Costs

The LCC analysis draws on the engineering analysis for estimating installation costs. DOE assigned each household an installation cost from a distribution of weighted-average values. For non-weatherized gas furnaces, oil-fired furnaces, and gas and oil boilers, the distribution was calculated with the Installation Model. For weatherized gas furnaces, DOE used calculations based on the RS Means' approach to calculate a mean value and assigned a triangular distribution of ±15 percent around the mean. For mobile home furnaces, which are installed at the mobile home factory, the installation cost is included in the markup.

3. Operating-Cost Inputs

a. Annual Energy Use

Energy consumption consists of the fossil fuel and electricity used to operate a furnace or boiler year-round. While the primary focus of this rulemaking is on fossil fuel consumption, design options that save on fossil fuels may also change electricity consumption. To take this effect into account, it is necessary to model electricity consumption in detail. If the house has air conditioning, the energy consumption includes the electricity used by the furnace blower to distribute conditioned air during the cooling season.

In determining the reduction in annual energy use due to more efficient furnace and boiler designs, the Department did not take into account a rebound effect. The rebound effect occurs when an appliance that is made more efficient is used more intensively, so that the expected energy savings from the efficiency improvement do not fully materialize. The Department seeks comments on whether a rebound effect should be included in the determination of annual energy savings. If a rebound effect should be included, the Department seeks data for basing the calculation of the rebound effect.

For non-weatherized gas furnaces, DOE chose 26 generic (''virtual'') models to represent the range of input capacity and airflow capacity of models currently available on the market. The number of real models with every possible combination of characteristics is too unwieldy to model. The Department used specifications from actual models to select the specifications for each virtual model. These specifications included blower size, motor size, supply-air outlet area, power consumption of the draft inducer and the igniter, several delay times, and fan curves. The Department assigned one virtual model to each of the sample housing records. The particular virtual model assigned to each house depended on the location and characteristics of the house.

To simulate fossil fuel and electrical energy use by furnaces, DOE used the 1997 RECS to get a representative sample of houses. RECS97 is based on a sample of 5900 households that EIA surveyed for information on energy consumption and expenditures, stock of energy-consuming appliances, and energy-related behavior. The information collected represents all households nationwide—about 101 million.

The heating and cooling loads are the amount of heating and cooling that a given house needs to keep it comfortable over an entire year. Determination of annual heating and cooling loads for the house requires making certain assumptions about its size and construction, thermal efficiency, and geographical location. Determination of the energy consumption of the system installed to satisfy the heating and cooling loads requires estimating the input capacity and the efficiency of the existing furnace and the size and seasonal energy-efficiency of the existing air conditioner.

The final element of the energy use calculations involved calculating how much energy furnaces of various designs would need to meet the heating and cooling load of each sample house. At this stage, DOE calculated the energy use of the virtual model furnace assigned to each house, incorporating all design options. Each house has several dozen different energy use

[5] The Department intends these virtual furnace models to represent typical furnaces with basic features, but not to describe specific, existing furnaces. The Department derived the characteristics of the virtual furnace models from existing basic furnace models, after examining directories and product literature for existing furnaces.

values, each one reflecting the furnace's gas and electricity use with a different combination of design options. Chapter 7 of the ANOPR TSD provides more information about these calculations.

The Department based the energy calculations for the other product classes on the energy calculations for non-weatherized gas furnaces, with appropriate changes to the calculations to account for the different energy-consuming characteristics of the other product classes.

EEI commented that the Department should compare conditional demand analysis of heating loads to simulation-based modeling. (EEI, No. 6 at p. 5) DOE did not use simulation-based modeling to estimate heat loads. The analysis used heating loads from RECS that are gotten with conditional demand analysis. Detailed simulation-based modeling that considers specific equipment designs is outside the scope of the analysis for this rulemaking.

Several stakeholders pointed out that furnace blower capacity is typically sized to meet air conditioning requirements and there is no tight relationship between blower electricity use and the furnace output. (NRDC, No. 21 at p. 4; GAMA, No. 8 at p. 4; and Trane, No. 9 at p. 2) The Department is aware that the furnace blower capacity is determined by the cooling capacity of the air conditioner that the furnace is designed to accompany, and takes this into account in its analysis.

EEI commented that DOE should account for the duct system in analyzing electricity use of fan motors. (EEI, No. 6 at p. 4) DOE accounts for duct system performance in the analysis by assigning system curve coefficients to each house selected from a set of distributions appropriate for a house with that size air conditioner.

An issue regarding electricity use of furnace fans concerns whether DOE should consider fan operation in the heating season only, or year-round, since many furnaces are combined with split-system air conditioners and use the same circulating air fan during the heating and cooling modes. EEI recommended that DOE not include cooling season impacts because measures to reduce fan energy in the heating season may increase energy use for the air conditioning system during the cooling season. (EEI, No. 6 at p. 3 and 5) Trane commented that DOE should not consider electricity use in the cooling mode since fan electric use for cooling is already covered by air conditioning standards. (Trane, No. 9 at p. 2) Because the fan is an integral part of a furnace, DOE accounted for year-round furnace electricity use, but it does not intend to regulate furnace electricity use.

b. Energy Prices

The LCC analysis requires information on the price of natural gas or heating oil, as well as the price of electricity used by electrical components. A furnace fan operates during the heating season and the cooling season. Since electricity prices vary by season in much of the country, DOE separately estimated winter and summer electricity prices. Boilers do not use electricity in the summer. Refer to section 8.3 of the ANOPR TSD for further discussion of the derivation of energy prices.

For all product classes, the Department used average energy prices to calculate the energy costs of the base case equipment. DOE used marginal energy prices for the cost of saved energy associated with higher-efficiency equipment. Marginal energy prices are the prices consumers pay for the last unit of energy used. Since marginal prices reflect a change in a consumer's bill associated with a change in energy consumed, such prices are appropriate for determining energy cost savings associated with efficiency standards.

For oil-fired furnaces and boilers, as well as gas furnaces using LPG, the Department used average prices for both base case and higher-efficiency equipment, as the data necessary for estimating marginal prices were not available.

For each household sampled from the RECS database, DOE identified the average electricity and gas prices either from that household's data, if available, or from another household in the same census division for which both prices were available. The Department estimated marginal energy prices from the RECS monthly billing data. The results show that the marginal prices are very close to average prices for the RECS households.

As in past rulemakings, the Department used price forecasts by the EIA to estimate the trend in average natural gas and oil prices and average and marginal electricity prices. To arrive at prices in 2012 and beyond, it multiplied the average and marginal price for 1998 by the forecasted annual price changes in the Reference Case forecast in EIA's Annual Energy Outlook 2003 (AEO 2003).

AGA supported DOE's use of EIA energy price forecasts. (AGA, No. 11 at p. 5) ASE suggested that the Department allow for price increases beyond EIA forecasts and that DOE modify EIA forecasts by reviewing industry forecasts. (ASE, No. 18 at p. 3) It is the policy of the Department to use forecasts provided by the EIA about future trends in energy prices. Since there is uncertainty in price forecasting, the Department also evaluated the sensitivity of financial impacts to alternative energy price forecasts in AEO 2003. In addition, the Department will make available to stakeholders the ability to conduct a scenario analysis to examine the results under different energy-price conditions.

c. Maintenance Costs

For the LCC analysis, DOE drew on the maintenance cost data derived in the engineering analysis. DOE assumed a triangular distribution for maintenance costs in order to capture the variability of these costs among homes. The Department was not aware of any recent data that provide a distribution of maintenance costs. However, based on a sensitivity analysis in the 1994 GRI report, which increased maintenance costs by 20 percent, and based on engineering judgement the Department assumed that a 15 percent range is most appropriate for a distribution. Thus, the DOE assigned the minimum maintenance cost to be 15 percent below the average maintenance cost and the maximum to be 15 percent above the average.

4. Equipment Lifetime

The equipment lifetime is the age at which furnaces or boilers are retired from service. Based on industry data, DOE used lifetimes as shown in Table II.9. DOE used a triangular probability distribution to assign a lifetime to individual furnaces in the sample houses from a range for each product class. Because none of the available data on equipment lifetime shows a clear relationship between efficiency and lifetime, the Department assumed that equipment lifetime is independent of efficiency.

TABLE II.9.—EXPECTED EQUIPMENT LIFETIME

[years]

	Gas furnace	Oil-fired furnace	Gas boiler	Oil-fired boiler	Heat pump	Electric furnace
Minimum	10	10	13	12	6	11
Mean	20	15	17	15	14	17
Maximum	30	20	22	19	21	23

GAMA said that because models are becoming more complex and more expensive to repair, owners may be likely to replace rather than repair equipment, which would lower the average life of equipment. (GAMA, No. 8 at p. 4) The Department believes that the probability distribution of equipment lifetimes used in the analysis is appropriate, given available evidence of past performance and recent trends.

5. Discount Rate

The Department derived the discount rates for this analysis from estimates of the interest or ''finance'' cost to purchase furnaces or boilers. Following financial theory, the ''finance'' cost of raising funds to purchase furnaces or boilers can be interpreted as: (1) The financial cost of any debt incurred to purchase equipment, principally interest charges on debt, or (2) the opportunity cost of any assets used to purchase equipment, principally interest earnings on household equity.

The purchase of equipment for new homes entails different finance costs for consumers than those from a purchase of replacement equipment. Thus, the Department used different discount rates corresponding to the finance cost of new construction and replacement installations. Refer to section 8.3 of the ANOPR TSD for further discussion of the method used to estimate discount rates.

Furnaces or boilers purchased in new homes are financed with home mortgages. For purchases made to replace equipment, where cash or some form of credit is used to finance the acquisition, it is appropriate to establish how the purchase affects a consumer's overall household financial situation. It is assumed that consumers maintain a balance of debt and equity in their portfolio that is not likely to change as a result of the purchase of a furnace or boiler. The Department assumed that households draw on equity and debt in proportion to the shares of the different types of equity and debt holdings in U.S. households. The Department estimated the average household equity and debt portfolio based on 1995 and 1998 Survey of Consumer Finances (SCF) data, which show that the types of equity and debt include second mortgages, credit cards, transaction accounts, certificates of deposit, U.S. savings bonds, stocks, and mutual funds. For each type of equity and debt, DOE estimated an interest/return rate using time-series data, wherever possible. For each house, the Department selected a type of equity or debt and then selected a discount rate for that house from a distribution of rates. The weighted-average real interest rate across all types of household debt and equity (based on the share of each type in the average portfolio in 1995 and 1998) is 6.7 percent.

ASE suggested that, for replacement purchases, DOE should survey consumer financing patterns to determine the shares of cash, home equity credit, unsecured loans, and other credit in furnace and boiler purchases. (ASE, No. 18 at p. 3) DOE is not aware of any statistically representative data that show how households use debt and equity to purchase a replacement furnace or boiler.

Trane commented that households have a large amount of debt on credit cards, so additional expenses for higher-efficiency heating equipment will reduce funds available to pay off such high-interest debt. (Trane, No. 9 at p. 3) DOE believes that its approach accounts for the role of credit card debt in household financial portfolios.

For equipment installed in new homes, the Department estimated the discount rate based on mortgage interest rate data provided in the SCF. This survey shows that mortgage rates carried by homeowners in 1998 averaged 7.9 percent. After adjusting for inflation and interest tax deduction, real after-tax interest rates on mortgages averaged 4.2 percent. ASE suggested that DOE use current mortgage interest rates as a discount rate for products sold in new homes. (ASE, No. 18 at p. 3) Since current rates may not be representative of rates in effect in 2012, DOE used mortgage interest rates that are representative of historical rates. The Department's method uses data that provide a distribution of mortgage rates among consumers and uses the most current data available at the time of analysis which was for 1998.

To account for variation in discount rates among consumers, DOE got information about the distribution of rates of interest or return on debt and equity among households from the data sources mentioned above. The Department calculated the real, after-tax rates as described above. The Department believes that this method allows for establishing a valid distribution of discount rates over the full range of discount rates relevant to most purchasers of the products covered by this rulemaking.

GAMA commented that: (1) The discount rate used should reflect opportunity cost, which is independent of financing methods; and (2) the opportunity cost should be based on a distribution of returns on consumer portfolios, regardless of their choice of equipment purchase financing. (GAMA, No. 41 at p. 6) DOE used a distribution of discount rates for replacement furnaces to reflect the suggestions made by GAMA.

GAMA suggested that implicit discount rates, while not a financial calculation, are a valid way to evaluate consumer decision making. (GAMA, No. 41 at p. 6) Because the LCC analysis is a financial analysis, DOE does not use implicit discount rates. In addition, DOE finds it difficult to measure implicit discount rates because of market imperfections, such as the cost of getting information about efficient appliances.

6. Effective Date

The effective date is the date on and after which a manufacturer must comply with an energy conservation standard in the manufacture of a covered product. (10 C.F.R. § 430.2) DOE had anticipated that the effective date for any new energy efficiency standard for residential furnaces and boilers would be January 1, 2012. This date was based on the assumption that a final rule would be published by January 1, 2004. Thus, the Department calculated the LCC for all consumers as if each one purchased a new residential furnace or boiler in 2012, the year it assumed the standard would take effect.

For purposes of conducting the analyses for this ANOPR, DOE based the cost of the equipment on year 2012; however, because the Department collected manufacturing cost data for the ANOPR engineering analysis in 2001, it expresses all dollar values as year 2001 dollars. Under 42 U.S.C. 6295 (f)(3)(B), any revised energy standards for these products will become effective eight years after its publication as a final rule in the **Federal Register**.

7. Inputs to Payback Period Analysis

The payback period (PBP) is the amount of time it takes the consumer to recover the assumed higher purchase expense of more energy efficient equipment through lower operating costs. This type of calculation is known as a ''simple'' payback period because it does not take into account changes in operating expense over time or the time value of money.

The inputs to the calculation of the PBP are the total installed cost of the equipment to the customer for each efficiency level and the annual (first year) operating expenditures for each efficiency level. The PBP calculation uses the same inputs as the LCC analysis, except that electricity price trends and discount rates are not needed. The calculation needs energy prices only for the year in which a new standard is expected to take effect, in this case the year 2012.

8. Summary of Inputs

Table II.10 summarizes the inputs used to calculate the customer economic impacts of various energy efficiency levels.

TABLE II.10.—SUMMARY OF INPUTS USED IN THE LCC AND PAYBACK ANALYSIS

Input	Description
Equipment Price	Derived by multiplying manufacturer cost by manufacturer, distributor, contractor, and builder markups and sales tax, as appropriate.
Installation Cost	Uses a distribution of weighted-average installation costs from the ''Installation Model.'' Installation configurations are weight-averaged by frequency of occurrence in the field, and vary by installation size. The Installation Model is RS Means-based, and comparable to available known data.
Maintenance Costs	Uses GRI data for gas furnaces and boilers, water heater rulemaking survey results for oil-fired equipment, and data from the 1993 rulemaking for mobile home furnaces.
Annual Heating Cooling Load	Heating and cooling loads calculated using 1997 RECS data. The furnace input capacity versus airflow capacity is assumed based on the vintage of the equipment and characteristics of each house.
Annual Energy Use	26 virtual models based on actual furnace characteristics capture the range of common furnace sizes. Energy calculations reflect actual house characteristics.
Energy Prices	1997 average and marginal energy prices are calculated for each house. AEO 2003 forecasts are used to estimate future average and marginal energy prices.
Lifetime	Uses Appliance Magazine survey results.
Discount Rate	Data from Survey of Consumer Finance and other sources were applied to estimate a discount rate for each house.

9. LCC and PBP Results

For each set of sample houses using equipment in a given product class, DOE calculated the average LCC savings and the median PBP for various ways of achieving each efficiency level. The Department calculated the average LCC savings relative to the base case forecast in each product class. As mentioned above, the base case forecast assumes that equipment purchases in the absence of new standards will reflect current purchasing patterns, with respect to efficiency. Therefore, the base case forecast is not limited to baseline model equipment.

Tables II.11a–f show the percentage of households that have a net cost and a net benefit for each design option. EEI commented that a minimum criterion for a standard level should be that at least 90 percent of affected consumers should receive a benefit, and that if DOE chooses not to use 90 percent, then it should use the same criterion as it used for central air conditioners (CAC) and heat pumps.[6] (EEI, No. 6 at p. 2) Southern also suggested that the Department use the same criteria as it did in the CAC rulemaking. (Southern, No. 14 at p. 1) EEI also recommended that the Department show the overall percentage of consumers who would gain and lose from a given standard level. (EEI, No. 6 at p. 3) NRDC believes that ''winners'' and ''losers'' should be analyzed on a state-by-state basis so these results can be compared to a national standard. NRDC also commented that DOE should accept a higher proportion of losers for climate-sensitive products such as furnaces than it does for other products. (NRDC, No. 21 at p. 3)

DOE will consider the overall percent of consumers with net benefit and with net cost in the course of this rulemaking. The economic impact of a standard level on consumers is one of several factors that the Department weighs in determining whether economic justification exists for energy efficiency standards. As part of the consumer subgroup analysis, DOE will report fractions of households with net benefit or net cost at a regional level. The available data are not sufficient to produce statistically significant results at a state-by-state level.

For non-weatherized gas furnaces (Table II.11a), the 81 percent AFUE level using single-stage (8 percent Category III venting system) shows a slightly negative LCC impact (−$3), but the 81 percent AFUE level using two-stage modulation (no Category III systems required) has a positive LCC savings of $72. The positive LCC savings for the 81 percent two-stage modulation design are due, in part, to its having lower energy consumption than the single-stage furnace of the same AFUE. To estimate the energy use of this furnace under field conditions, DOE adopted the assumptions for two-stage modulation that appear in the DOE test procedure (see Appendix 6.3 of the TSD). DOE is requesting comments on this issue; see section IV.E.4 of this ANOPR. The 90 percent AFUE condensing level has a negative average LCC impact.

[6] In the analysis of standards for CAC and heat pumps, the Department considered the share of consumers that would receive a net LCC benefit, among other factors. However, it did not use a specific criterion with respect to the percent of consumers that would receive a net benefit.

TABLE II.11A.—LCC AND PBP RESULTS FOR NON-WEATHERIZED GAS FURNACES

AFUE: design option	LCC					Payback	
	Average $	Average savings $	Net cost %	No impact %	Net benefit %	Median years	Average years
78%	9,966	.....	.....	.....	.....	.....	.....
80%	9,795	0	0	99	1	2.1	37.8
80% 2-stage modulation	9,718	41	33	27	40	8.6	13.5
81% 8% Cat. III	9,789	−3	32	27	41	8.8	27.8
81% 2-stage modul., no Cat. III	9,680	63	29	27	45	7.6	17.0
82%	10,170	−292	70	26	4	28.7	84.6
82% 2-stage modulation	10,103	−256	65	26	9	18.5	60.2
83%	10,400	−468	73	26	1	63.3	121.3
90%	9,917	−154	56	26	18	17.9	42.5
92% Incr. HX Area	9,924	−166	60	15	25	16.1	41.7
96% Step Mod ECM	10,723	−954	89	2	9	32.3	88.9

For weatherized gas furnaces (Table II.11b), the results show positive average LCC savings for AFUE levels through 82 percent. The exception is the 80 percent Improved Heat Transfer Coefficient design option due to the higher cost of this design.

TABLE II.11B.—LCC AND PBP RESULTS FOR WEATHERIZED GAS FURNACES

AFUE: design option	LCC					Payback	
	Average $	Average savings $	Net cost %	No impact %	Net benefit %	Median years	Average years
78% Baseline Model	8,545	.....	.....	.....	.....	.....	.....
80% Incr. HX Area	8,457	2	0	98	2	1.1	1.5
80% Improved Insulation	8,454	4	26	46	28	9.0	8.2
80% Improved Heat Xfer	8,467	−4	52	46	2	2.8	3.7
81% Incr. HX Area	8,418	23	2	46	52	2.0	2.6
81% Improved Insulation	8,415	25	20	20	60	5.2	6.4
81% Improved Heat Xfer	8,424	18	32	20	48	3.8	5.1
82% Incr. HX Area	8,380	53	3	20	77	2.1	2.9
82% Improved Insulation	8,377	56	18	0	82	4.3	5.6
82% Improved Heat Xfer	8,382	51	24	0	76	2.5	3.4

For mobile home gas furnaces (Table II.11c), the results show positive average LCC savings for the 80 to 82 percent AFUE levels using single-stage technology. The 90 percent AFUE condensing level shows an average LCC saving of $192, but 45 percent of the households are negatively impacted.

TABLE II.11C.—LCC AND PBP RESULTS FOR MOBILE HOME GAS FURNACES

AFUE: design option	LCC					Payback	
	Average LCC $	Average savings $	Net cost %	No impact %	Net benefit %	Median years	Average years
75% Baseline Model	7,904	.....	.....	.....	.....	.....	.....
80%	7,480	64	1	85	14	2.4	4.7
80% 2-stage	7,718	−163	80	5	15	26.0	60.5
81%	7,428	112	10	5	85	4.4	6.3
81% 2-stage Modulation	7,670	−117	75	5	20	24.9	60.3
82%	7,385	153	14	5	81	5.1	7.5
82% 2-stage Modulation	7,630	−80	70	5	25	22.9	56.3
90%	7,352	184	46	5	49	12.1	22.7

For oil-fired furnaces (Table II.11d), the results show positive average LCC savings for AFUE levels from 80 percent through 83 percent.

TABLE II.11D.—LCC AND PBP RESULTS FOR OIL-FIRED FURNACES

AFUE: design option	LCC					Payback	
	Average $	Average savings $	Net cost %	No Impact %	Net benefit %	Median years	Average years
78% Baseline Model	16,194	.....	.....	.....	.....	.....	.....
80%	15,900	11	0	96	4	0.2	0.2
81%	15,762	95	2	39	59	0.4	0.5
81% Atom Burner 2-stage Mod	15,885	8	42	30	28	11.7	19.4
82%	15,625	190	2	30	68	0.3	0.4
82% Atom Burner 2-stage Mod	15,753	89	35	22	42	8.5	13.8
83%	15,492	293	3	22	75	0.3	0.4
83% Atom Burner 2-stage Mod	15,626	178	31	15	54	6.8	11.2
84%	15,967	−111	58	15	27	13.7	20.8
84% Atom Burner 2-stage Mod	16,106	−240	71	7	22	16.3	25.1
85%	15,845	1	49	7	44	10.0	13.8
85% Atom Burner 2-stage Mod	15,989	−143	69	0	31	13.7	20.1

For hot-water gas boilers (Table II.11e), the results show positive average LCC savings for the AFUE levels from 81 percent through 84 percent using single-stage technology.

TABLE II.11E.—LCC AND PBP RESULTS FOR HOT-WATER GAS BOILERS

AFUE: design option	LCC					Payback	
	Average LCC $	Average savings $	Net cost %	No impact %	Net benefit %	Median years	Average years
80% Baseline Model	10,635	.....	.....	.....	.....	.....	.....
81%	10,371	93	0	65	35	2.1	2.4
81% 2-stage Modulation	10,599	−36	38	44	18	9.9	14.8
82%	10,314	125	3	44	53	2.5	3.3
82% 2-stage Modulation	10,542	−36	48	30	22	9.3	19.6
83%	10,256	166	5	30	66	2.5	3.3
83% 2-stage Modulation	10,483	−29	59	15	27	9.9	23.3
84%	10,199	215	6	15	79	2.5	3.4
84% 2-stage Modulation	10,426	0	62	6	32	10.5	22.7
88%	10,741	−294	67	6	27	17.5	29.8
91%	10,823	−372	75	3	22	19.3	43.0
99%	11,304	−853	85	0	15	21.7	46.1

For hot-water oil-fired boilers (Table II.11f), the AFUE levels through 84 percent (without use of atomized burner) have positive average LCC savings.

TABLE II.11F.—LCC AND PBP RESULTS FOR HOT-WATER OIL-FIRED BOILERS

AFUE: design option	LCC					Payback	
	Average $	Average savings $	Net cost %	No impact %	Net benefit %	Median years	Average years
80%	14,890	.....	.....	.....	.....	.....	.....
81%	14,772	6	0	95	5	0.6	0.8
81% Atomized Burner	15,166	−36	11	89	0	70.4	104.9
82%	14,657	18	0	89	11	0.7	0.8

TABLE II.11F.—LCC AND PBP RESULTS FOR HOT-WATER OIL-FIRED BOILERS—Continued

AFUE: design option	LCC					Payback	
	Average $	Average savings $	Net cost %	No impact %	Net benefit %	Median years	Average years
82% Atomized Burner ..	15,051	−45	16	84	0	35.0	64.3
83%	14,545	36	0	84	16	0.7	0.8
83% Atomized Burner ..	14,939	−119	37	61	2	23.0	45.0
84%	14,435	79	0	61	39	0.7	0.8
84% Atomized Burner ..	14,830	−169	58	37	5	26.7	57.6
86%	14,943	−234	52	37	11	23.0	31.6
86% Atomized Burner ..	15,338	−602	91	7	2	53.0	98.1
90%	15,260	−527	81	7	12	19.6	23.8
95%	15,561	−829	88	0	12	19.1	23.0

The Department seeks information and comments relevant to the assumptions, methodology, and results for the LCC and PBP analyses.

E. National Impact Analysis

The national energy savings and economic impacts anlaysis assesses the national energy savings (NES) and the net present value (NPV) of total customer costs and savings expected to result from new standards at specific efficiency levels. The Department calculated the NES and NPV for a given standard level as the difference between a base case forecast (without new standards) and the standards case (with standards). National annual energy consumption is determined by multiplying the number of units in the stock of residential furnaces and boilers (by vintage) by the unit energy consumption (also by vintage). Cumulative energy savings are the undiscounted sum of the annual NES determined over a specified time period. The Department calculated net savings each year as the difference between total operating cost savings and increases in total installed cost. Cumulative savings are the sum of the annual NPV determined over a specified time period. The NES analysis which will accompany the NOPR will include both discounted and undiscounted values for future energy savings to account for their timing.

The Department assessed the NES and NPV using the NES Spreadsheet Model. DOE developed this method for standards rulemakings and tailors it for each specific rulemaking. The Department posts NES spreadsheets for furnaces and boilers on its Web site to make the analysis more accessible and transparent to all stakeholders. See *http://www.eere.doe.gov/buildings/appliance_standards/furnaces_boilers.html*.

1. Approach

The Department calculated national energy consumption for each year, beginning with the expected effective date of the standards (2012), for the base case forecast and for each candidate efficiency level. For each product class, DOE calculated the site energy consumption for the base case forecast and each considered efficiency level by summing the energy consumption of equipment operating in each year. The survival fraction of equipment shipped in previous years is equivalent to the percentage not replaced. The Department aggregated the differences in annual energy consumption between the base case forecast and standards cases forecast to arrive at the cumulative national energy savings in the 2012–2035 period for each candidate efficiency level.

The shipments forecast accounts for shifts in market share from gas to electric equipment as a result of an increase in gas equipment price. Projected shipments of gas equipment, and hence gas consumption, are lower in the higher-efficiency cases, but there is an increase in electricity consumption by electric heating equipment, for which the model also accounts.

The Department calculated the NPV to the Nation of new efficiency standards from the incremental costs of higher-efficiency equipment minus the change in associated operating costs over the period considered. The Department accounted for operating cost savings until all the equipment installed through 2035 is retired.

GAMA commented that the NES analysis should be based on an aggregation of individual consumer life-cycle cost results. (GAMA, No. 41 at p. 4) The NES and the LCC analyses are intended to answer different questions, so they use different methods. The LCC analysis provides a snapshot of the impact of standards on individual consumers purchasing new equipment in the first year the standards take effect. It analyzes the effect on a wide range of consumers and is designed to reflect the diversity of the situation for a cross-section of all the households in the U.S. In contrast, the NES calculates the impacts of potential standard levels for the entire Nation over a period of many years, using the average energy consumption and average total installed price from the LCC analysis for each considered efficiency level. In the NES, only a fraction of U.S. households is assumed to purchase new equipment each year.

GAMA commented that there has been almost no consideration of uncertainty or variability in the National Benefits analysis in DOE's rulemakings. (GAMA, No. 41 at p. 5) The Department's NES analysis uses a scenario approach to address uncertainty in key variables. The Department conducts sensitivity analyses as needed by running alternative scenarios for input variables that are of interest to stakeholders.

2. Inputs

a. Shipments

Furnace and boiler shipments comprise units used for (1) replacements of retired units with the same type, (2) conversions at retirement to another fuel type, and (3) installations in new homes. Almost all new construction has central heating equipment and most equipment is replaced at retirement.

The Department estimated the number of replacements based on past shipments and expected retirement rates. Forecasting future replacements requires estimates of shipments to new housing, since the replacements 20–30 years from now will replace the equipment shipped in the next few years. Consumers most commonly replace equipment with equipment in the same product class (replacement-in-kind). Some fraction of households

switch fuels, retiring an oil or electric unit and replacing it with a gas system (conversion away from natural gas is rare). The Department estimated future conversions based on historical data from AGA.

The Department estimated the total number of shipments to new housing based on projections of new housing construction. Market shares of heating equipment in newly constructed homes reflect a choice that is influenced by fuel costs and equipment prices. For gas furnaces, the Department modeled this choice as described below.

i. Replacement and Conversions

The replacement model estimates what fraction of the historically shipped units are still in service and how many will be replaced each year. The replacement model uses estimates of how long each type of equipment is expected to operate before it is replaced. Depending on the age of a piece of heating equipment, there is a certain probability of its being replaced. The model uses a replacement probability distribution based on distributions of expected equipment lifetimes. Two basic assumptions generated the probability distribution. First, DOE expects equipment to have a maximum probability of being replaced at the mean lifetime. Second, replacement probability goes to zero in the minimum and maximum lifetime years. Assuming a linear slope in probability produces a triangular distribution.

Given the probability of replacement as a function of equipment age or vintage, the calculation of expected replacements in any given year follows directly from past shipments. In a given year, the number of replacements is equal to the portion of the previous year's shipments expected to retire plus the number of shipments from two years ago expected to retire, etc.

GAMA suggested that the retirement function should be applied randomly in the NES analysis, as DOE does in the LCC analysis. (GAMA, No. 41 at p. 4) In the NES analysis, DOE tracks shipments year by year and applies the retirement function to all equipment installed in each year. The Department does not apply the retirement function randomly to keep the NES model transparent and to avoid the need to use Monte Carlo calculation methodology (which uses a distribution of values to allow for variability and/or uncertainty on the inputs).

AGA commented that standards that are not cost-effective will encourage consumers to defer replacement of equipment. (AGA, No. 11 at p. 2) DOE developed and applied modeling of equipment retirement and replacement that reflects the available information on market behavior.

To estimate future conversions, DOE used data from the annual house-heating survey conducted by the AGA, which reports the numbers of households that converted to natural gas space heating from 1990 to 1995. On average, about 100,000 oil-heating households and 75,000 electricity-heating households converted to natural gas annually. Nearly a third of oil-heating customers and more than a quarter of electricity-heating households decided to convert to natural gas instead of replacing their old system with the same fuel type. The number of conversions from gas to oil or electricity is negligible.

The conversion rate is the fraction of oil or electric equipment retirements in which the consumer decides to change to gas heating. Based on available information, DOE assumed that there is no early replacement (*i.e.*, before end of useful life) for conversion. The Department assumed that the conversion rates estimated from the AGA data, 33 percent for oil equipment (furnaces and boilers) and 26 percent for electric heating equipment will continue in the future. Since the oil-fired furnace and boiler markets are mostly replacements, oil-to-gas conversions will have a significant negative affect on shipments of these product classes in the future.

ii. Shipments to New Housing

New housing includes single- and multi-family units, referred to as ''new housing completions,'' and mobile home placements. For new housing completions and mobile home placements, DOE adopted separate projections for the South and non-South regions from AEO 2002 for the 2002–2020 period. The Department assumed that completions grow at 0.5 percent per year (the projected average annual growth rate in the 2000–2020 period) for the 2021–2035 period. For mobile home placements, DOE extrapolated the trend of flat growth in 2010–2020 out to 2035.

In DOE's method, the number of annual shipments of each product class going to new housing units is equal to housing completions for that year, multiplied by the market share estimated for each product class. The Department expects changes in equipment cost or operating expense associated with a particular product class to affect relative market shares in new construction much more significantly than in the replacement market. Evidence suggests that changes in first cost and operating cost have had an effect in the past on the choice of installing either a gas furnace or an electric central heating system in a new home.

For non-weatherized and weatherized gas furnaces and mobile home gas furnaces, the shipments model takes into account possible market-shift effects from changes in fuel prices and equipment price increases related to efficiency standards. The Department estimated future market shares using historical relationships between gas and electricity prices, gas and electric heating equipment prices, and gas furnace market shares, combined with estimated increases in equipment cost associated with higher efficiency. The model predicts changes in market share produced by a proportional change in the energy and equipment price variables. For a given heating load, gas furnaces are less expensive to operate than electric heating equipment, and forecasts of fuel prices predict that this will continue to be the case. Therefore, the Department does not expect a large shift from gas to electric heating due to increased cost of gas-fired equipment. This is especially true of colder regions, where electric heating is prohibitively expensive. In the Southern census region and in mobile homes, however, operating cost is less of a factor relative to the first cost of equipment. Purchasers of mobile housing often have relatively low incomes and therefore may be more sensitive to first costs than other households. For the above reasons, DOE estimated gas furnace market share independently for three groups: Single-family and multi-family homes in regions other than the Southern census region, single-family and multi-family homes within the Southern census region, and mobile homes in all census regions.

DOE received several comments on the issue of market share shift due to standards. AGA called for better, more self-consistent estimates of future market shares, with cross-elasticities that do not vary across product classes. (AGA, No. 11 at p. 6) As described above, DOE used historical data to develop consistent market share estimates and it does not make use of cross-elasticities. EEI said that DOE should use the same type of parameters for its analysis of fuel-switching in furnaces as for its analysis of electric heat pumps. (EEI, No. 6 at p. 5) AGA commented that standards on electricity use of fuel-fired furnaces would encourage fuel-switching to electric resistance furnaces, especially in manufactured housing. (AGA, No. 11 at p. 3) DOE's analysis accounts for market shifts to electric heating and considers

mobile housing separately. Market share shifts are reflected in the MIA, which is provided to the Department of Justice (DOJ) to facilitate its determination of the impact of any lessening of competition that is likely to result from the imposition of proposed energy efficiency standards.

The analysis projects the market share of gas furnaces to fall slightly by 2012 due to somewhat higher growth in natural gas prices relative to electricity prices. The Department expects the relationship between gas and electricity prices to be relatively stable beyond 2012. The analysis does not project a significant market share shift due to operating cost changes, which were historically the dominant driver of market shares.

The Department based its estimate of future market share shifts on the equipment costs estimated in the engineering analysis and on the Installation Model data. Since equipment cost varies with the efficiency level, the projected market share of gas furnaces is different for each efficiency level. The Department assumed that all shipments will incur the equipment price increase after the date of the standard implementation, but that prices will not rise further nor decline over time in real terms.

The model estimates the combined market share of non-weatherized and weatherized gas furnaces in new housing completions in the South and non-South regions based on the historical parameters and their projected values. Table II.12 shows that the higher equipment prices associated with higher AFUE slightly decrease the share of gas furnaces in total new housing completions. The Department estimated shipments of weatherized gas furnaces by assuming that the latter have the same share of total gas furnace shipments in future years as estimated for year 2000.

TABLE II.12.—SHIPMENTS OF NON-WEATHERIZED AND WEATHERIZED GAS FURNACES TO NEW HOUSING FOR DIFFERENT EFFICIENCY LEVELS

Year	Total completions (million)	Gas furnace share (%)	Gas furnace shipments (million)
2010	1.62	54.6	0.88
2020	1.72	.....	.....
Base	.....	54.9	0.94
80%	.....	54.9	0.94
81%*	.....	54.7	0.94
90%	.....	54.4	0.92
92%	.....	53.0	0.91

* The values are about the same for the single-stage and modulating furnaces.

For mobile home gas furnaces, DOE used an approach similar to that used for non-weatherized gas furnaces. In this case, however, the impact of higher equipment cost associated with higher efficiency is greater than for non-weatherized gas furnaces. The historical data show a relatively large shift away from gas furnaces associated with the increase in the price of gas relative to electricity.

The Department estimated the future market shares of oil-fired furnaces and gas and oil-fired boilers in total new housing completions based on the average shares in homes built in 1997–1999. The Department assumed that these market shares will not be affected by changes in equipment price due to standards implementation. They remain constant after 2012.

iii. Total Projected Shipments

The Department calculated total shipments in each class by adding new housing shipments in each year to replacements-in-kind and conversions. Table II.13a shows that efficiency levels up to 90 percent AFUE have little effect on total non-weatherized gas furnace shipments. Table II.13b shows the total shipment projection for selected years for all other product classes. For mobile home furnaces, higher efficiency levels up to 82 percent AFUE have a small effect on shipments.

TABLE II.13A.—TOTAL SHIPMENTS OF NON-WEATHERIZED GAS FURNACES FOR DIFFERENT EFFICIENCY LEVELS

[Million]

Year	New housing	Replacements-in-kind	Conversions to gas	Total
2010	0.78	1.72	0.14	2.64
2020	.....	.....	.....	.....
Base	0.83	2.30	0.16	3.28
80%	0.83	2.30	0.16	3.28
81%*	0.83	2.30	0.16	3.28
90%	0.80	2.30	0.16	3.26
92%	0.76	2.30	0.16	3.21

* The values are about the same for the single-stage and modulating furnaces.

TABLE II.13B.—TOTAL SHIPMENTS IN OTHER PRODUCT CLASSES

[Million]

Product Class	2012	2020	2030
Weatherized gas furnaces	0.369	0.429	0.469

TABLE II.13B.—TOTAL SHIPMENTS IN OTHER PRODUCT CLASSES—Continued

[Million]

Product Class	2012	2020	2030
Mobile home gas furnaces:			
Base Case Forecast	0.082	0.080	0.075
81% AFUE	0.080	0.078	0.073
Oil-fired furnaces	0.102	0.093	0.079
Hot-water gas boilers	0.105	0.113	0.117
Hot-water oil-fired boilers	0.135	0.113	0.118

b. Annual Unit Energy Consumption

The annual unit energy consumption (UEC) for the base case forecast and each efficiency level come from the LCC analysis. It includes a value for gas (or oil) consumption and a value for electricity consumption.

The base case forecast reflects the expected pattern of equipment purchase in the absence of any new standards. For non-weatherized gas furnaces, DOE forecasted the share of condensing furnaces in total shipments based on historic trends. The projected share rises from 23 percent in 2000 to 37 percent in 2035. For each of these two types, the base case forecast assumes that the average AFUE in 2012 is equal to the estimated current average AFUE (based on data from GAMA). These average values are 80 percent for non-condensing furnaces and 93 percent for condensing types. The base case forecast assumes that these values remain constant through 2035.

For other product classes, there is little evidence of change in recent years in the average AFUE, so DOE used the current averages for the base case forecast. These are 80.6 percent AFUE for weatherized gas furnaces, 79.8 percent AFUE for mobile home gas furnaces, 81.1 percent AFUE for oil-fired furnaces, 81.9 percent AFUE for hot-water gas boilers, and 83.9 percent AFUE for hot-water oil-fired boilers.

AGA commented that data from GAMA suggest market movement toward higher efficiency without standards, and DOE should take these data into account. (AGA, No. 11 at p. 4) As mentioned above, DOE used the base case forecast which incorporates continued growth in the market share of high-efficiency condensing furnaces.

c. Site-to-Source Conversion Factors

Primary energy consumption includes energy used in the production and transmission of the energy consumed at the site. For natural gas and electricity, the Department used annual site-to-source conversion factors based on the LBNL version of NEMS, which corresponds to EIA's *Annual Energy Outlook 2002* (AEO 2002). The factors used are marginal values, which represent the response of the system to an incremental decrease in consumption. Natural gas losses include pipeline leakage, pumping energy, and transportation fuel. AEO 2002 forecasts losses of about 7 percent for the natural gas used on site for the period 2000–2020, with only slight variation from year to year. For electricity, the conversion factors vary over time due to projected changes in generation sources (*i.e.*, the power plant types projected to provide electricity to the country). The Department assumed that conversion factors remain constant at 2020 values through 2035. The Department assumed no losses for delivery of site heating oil.

AGA said that DOE should account for energy consumption over the full fuel cycle. (AGA, No.11 at p. 1) DOE considers the complete primary energy consumption impacts of standards, including changes in consumption associated with market shifts induced by the standard.

d. Installed Equipment Costs

The Department calculated the potential effect on consumers of higher-efficiency standards based on the incremental costs of higher-efficiency equipment minus the change in operating costs over the period considered. The Department took average equipment costs for the base case forecast and each efficiency level from the LCC analysis. Total equipment costs for each efficiency level equal the average cost multiplied by shipments in each year. The Department assumed no change in real equipment costs at each level after 2012. In cases where a market shift away from gas furnaces is projected, DOE accounted for the equipment costs of the electric heating equipment.

e. Energy Prices

For a given efficiency level, total operating cost in each year is the product of total site energy consumption by type and the appropriate energy prices. The calculation uses marginal energy prices, which represent the cost of the last unit of energy used, and thus the savings on a consumer's energy bill from consuming one fewer unit of energy. The Department determined 1998 marginal gas and electricity prices in the LCC analysis. To project prices out to 2025, DOE used energy price projections from AEO 2003. For the years after 2025, DOE applied the average annual growth rate in 2010–2025 for gas and heating oil prices and the average annual growth rate in 2015–2025 for electricity prices.

f. Discount Rate

A final step in assessing financial impacts of standards is to discount future monetary impacts using an appropriate discount rate. The Department used both a discount rate of seven percent and three percent real rate of return, in accordance with the Office of Management and Budget's (OMB) guidelines contained in Circular A–4, Regulatory Analysis, September 17, 2003 (see Chapter 10 of the TSD). (OMB Circular A–4, section E (September 17, 2003)) The Department defines the present year as 2001 for consistency with the year in which the Department collected manufacturer cost data.

g. Summary of Inputs

Table II.14 summarizes the inputs used to calculate the NES and NPV values.

TABLE II.14.—SUMMARY OF NATIONAL ENERGY SAVINGS AND NET PRESENT VALUE INPUTS

Parameter	Data description
Shipments	Annual shipments from shipments model.
Effective Date of Standard	2012.

TABLE II.14.—SUMMARY OF NATIONAL ENERGY SAVINGS AND NET PRESENT VALUE INPUTS—Continued

Parameter	Data description
Annual Unit Energy Consumption	Annual weighted-average values are a function of efficiency level via an assumed correlation of RECS data.
Installed Cost per Unit	Annual weighted-average values are a function of efficiency level (established from the LCC analysis).
Maintenance Cost per Unit	Annual weighted-average values are a function of efficiency level (established from the LCC analysis).
Energy Prices	EIA Annual Energy Outlook 2003 forecasts to 2025 and extrapolation beyond 2025.
Energy Site-to-Source Conversion	Generated by DOE/EIA's National Energy Modeling System (NEMS) program (includes electric generation, transmission, and distribution losses) .
Discount Rate	7 percent and 3 percent real.
Present Year	Future expenses are discounted to year 2001.

3. National Impact Analysis Results

The cumulative national energy savings (NES) in the 2012–2035 period, and the net present value (NPV) for equipment installed in the 2012–2035 period, are shown in Tables II.15 a-f for the various product classes.

TABLE II.15A.—CUMULATIVE NES AND CONSUMER NPV FOR NON-WEATHERIZED GAS FURNACES

Efficiency level (AFUE)	NES (Quads)	NPV (billion 2001 $)	
		7% Discount rate	3% Discount rate
80%	0.03	0.05	0.15
81%, 2-stage mod., no Cat. III	1.12	0.75	3.22
81%, single-stage, 8% Cat. III	0.44	−0.29	0.06
82%	0.82	−2.03	−3.08
90%	4.10	−0.56	5.11
92%	4.83	−1.66	3.36
96%	7.16	−11.59	−14.48

TABLE II.15B.—CUMULATIVE NES AND CONSUMER NPV FOR WEATHERIZED GAS FURNACES

Efficiency level (AFUE) (Percent)	NES (Quads)	NPV (billion 2001 $)	
		7% Discount rate	3% Discount rate
80	0.01	0.02	0.05
81	0.08	0.07	0.21
82	0.18	0.14	0.43

TABLE II.15C.—CUMULATIVE NES AND CONSUMER NPV FOR MOBILE HOME GAS FURNACES

Efficiency level (AFUE) (percent)	NES (quads)	NPV (billion 2001 $)	
		7% Discount rate	3% Discount rate
80	0.01	0.01	0.05
81	0.02	0.01	0.03
82	0.02	−0.01	−0.01
90	−0.09	−0.38	−1.00

TABLE II.15D.—CUMULATIVE NES AND CONSUMER NPV FOR NON-WEATHERIZED OIL FURNACES

Efficiency level (AFUE) (percent)	NES (quads)	NPV (billion 2001 $)	
		7% Discount rate	3% Discount rate
80	0.005	0.01	0.03
81	0.02	0.04	0.10
82	0.04	0.07	0.19
83	0.05	0.11	0.29
84	0.07	−0.15	−0.20

TABLE II.15D.—CUMULATIVE NES AND CONSUMER NPV FOR NON-WEATHERIZED OIL FURNACES—Continued

Efficiency level (AFUE) (percent)	NES (quads)	NPV (billion 2001 $)	
		7% Discount rate	3% Discount rate
85	0.09	−0.11	−0.10

TABLE II.15E.—CUMULATIVE NES AND CONSUMER NPV FOR HOT-WATER GAS BOILERS

Efficiency level (AFUE) (percent)	NES (quads)	NPV (billion 2001 $)	
		7% Discount rate	3% Discount rate
81	0.03	0.02	0.09
82	0.09	0.10	0.37
83	0.16	0.20	0.70
84	0.24	0.33	1.10
88	0.57	−0.65	−0.42
99	1.43	−1.00	0.25

TABLE II.15F.—CUMULATIVE NES AND CONSUMER NPV FOR HOT-WATER OIL-FIRED BOILERS

Efficiency level (AFUE) (percent)	NES (quads)	NPV (billion 2001 $)	
		7% Discount rate	3% Discount rate
81	0.003	0.007	0.02
82	0.01	0.02	0.05
83	0.02	0.03	0.10
84	0.03	0.07	0.20
86	0.09	−0.28	−0.40
90	0.25	−0.53	−0.62

The Department seeks information and comments relevant to the assumptions, methodology, and results for the national energy savings and economics impacts analysis (see section IV.E of this ANOPR).

F. Life-Cycle Cost (LCC) Sub-Group Analysis

The life-cycle cost sub-group analysis examines the economic impacts from possible revisions to U.S. residential furnace and boiler energy-efficiency standards on different population groups of consumers. The analysis determines whether or not a particular segment of consumers would be adversely affected by different trial standard levels in terms of increased LCC of equipment. DOE also calculated the fraction of the population that would have net benefits (reduced LCC) or net costs (increased LCC) from particular trial standard levels.

Stakeholders said DOE should: (1) Conduct consumer sub-group analyses by region (ACEEE, No. 15 at p. 6); (2) provide stakeholders with a list of consumer sub-groups, reach consensus on major subgroups, and identify consumer subgroups expected to experience distinct levels of impacts (AGA, No. 11 at p. 5); and (3) segment householders into owners and renters, and ensure that renters (a majority of low income households) are not disadvantaged by standards. (ASE, No. 18 at p. 3) In the NOPR phase, DOE will examine three consumer sub-groups: low-income households, senior-only residences, and renters.

G. Manufacturer Impact Analysis

The policies outlined in the Department's Process Rule called for substantial revisions to the analytical framework of the manufacturer impact analysis. The Department held a public meeting on March 11 and 12, 1997, to describe and get comment on a new generic methodology to be used in performing future manufacturing impact analyses of products covered under NAECA. The Department intends to apply this methodology to other EPCA-related efficiency standards as well, tailoring the methodology for each rule on the basis of stakeholder comments.

During the NOPR phase, DOE intends to assess the impacts of new energy efficiency standards on residential furnace and boiler manufacturers. In addition to the more obvious financial impacts, a wide range of quantitative and qualitative effects may occur following adoption of a standard that may require changes to the manufacturing practices for these products. The Department will identify these effects through interviews with manufacturers and other stakeholders.

1. Sources of Information for the Manufacturer Impact Analysis

Many of the analyses described earlier provide important information for the manufacturer impact analysis. Information includes manufacturing costs, shipments forecasts, and price forecasts. DOE will supplement this information with company financial data, and other information gathered during interviews with manufacturers. The interview process has a key role in the manufacturer impact analysis, since it allows DOE to consider confidential or sensitive information in the rulemaking decision.

The Department and/or contractors will conduct detailed interviews with as many manufacturers as is necessary to gain insight into the range of potential impacts of new standards. During the interviews, the Department solicits information on the possible impacts of potential efficiency levels on sales, direct employment, capital assets, and industry competitiveness. Both qualitative and quantitative information

is valuable. DOE will schedule interviews well in advance, to provide every opportunity for key individuals to be available for comment. Although a written response to the questionnaire is acceptable, DOE prefers an interactive interview process, because it helps clarify responses and provides the opportunity for DOE to identify additional issues.

Before the interviews, the Department will prepare and distribute to the manufacturers estimates of the financial parameters that DOE plans to use in the impact analysis. During the interviews, the Department will seek comment and suggestions regarding the values selected for the parameters.

The Department will ask interview participants to identify all confidential information that they have provided, either in writing or orally. DOE will consider all information collected, as appropriate, in its decision-making process. However, DOE cannot make confidential information available in the public record. The Department also will ask participants to identify all information that they wish to have included in the public record, but that they do not want to have associated with their interview. DOE will incorporate this information into the public record, but will report it without attribution.

The Department and/or contractors will collate the completed interview questionnaires and prepare a summary of the major issues.

2. Industry Cash Flow Analysis

The industry cash flow analysis relies primarily on the Government Regulatory Impact Model (GRIM). The Department uses the GRIM to analyze the financial impacts of more stringent energy efficiency standards on the industry that produces the products covered by the standard.

The GRIM analysis uses a number of factors to determine annual cash flows from a new standard: Annual expected revenues; manufacturer costs (including cost of goods, capital depreciation, R&D (research and development), selling, and general administrative costs); taxes; and conversion expenditures. DOE compares the results against baseline model projections that involve no new standards. The financial impact of new standards is the difference between the two sets of discounted annual cash flows. Other performance metrics, such as return on invested capital, also are available from the GRIM.

ACEEE would like to see inter-annual variability of cash flows or profitability forecasts, for context and perspective. (ACEEE, No. 15 at p. 6) DOE uses the GRIM which is based on multi-year forecasts, and does not analyze intra-year variability directly. Collecting this information would impose a large data-gathering burden on manufacturers.

3. Manufacturer Sub-Group Analysis

Using industry cost estimates is not adequate for assessing differential impacts among sub-groups of manufacturers. Smaller manufacturers, niche players, or manufacturers exhibiting a cost structure that differs significantly from the industry average, could experience a more negative impact. Ideally, the Department would consider the effect on every firm individually; however, it typically uses the results of the industry characterization to group manufacturers exhibiting similar characteristics.

During the interview process, the Department will discuss the potential sub-groups and sub-group members that it has identified for the analysis. DOE will look to the manufacturers to suggest what sub-groups or characteristics are most appropriate for the analysis.

4. Competitive Impacts Assessment

Southern Co. commented that DOE should make sure competition is not reduced as a result of the rulemaking. (Southern Co., No. 14 at p. 4) ACEEE was concerned that DOE should show how standards would change the historical trend to consolidation. (ACEEE, No. 15 at p. 6) EPCA directs the Department to consider any lessening of competition, as determined in writing by the Attorney General, that is likely to result from imposition of standards. (42 U.S.C. 6295 (o)(2)(B)(i)(V)) The Department will make a determined effort to gather and report firm-specific financial information and impacts. The competitive analysis will focus on assessing the impacts to smaller, yet significant, manufacturers. DOE will base the assessment on manufacturing cost data and on information collected from interviews with manufacturers. The manufacturer interviews will focus on gathering information that will help in assessing greater-than-average cost increases to some manufacturers, increased proportions of fixed costs that could potentially increase business risks, and potential barriers to market entry (*e.g.*, proprietary technologies).

5. Cumulative Regulatory Burden

The Department recognizes and seeks to mitigate the overlapping effects on manufacturers of amended DOE standards and other regulatory actions affecting the same equipment or companies. *See* 10 CFR part 430, subpart C, Appendix A, 10(g)(1). The Department is not aware of any other regulations pending or planned that will increase the regulatory burden resulting from this rulemaking on furnace and boiler manufacturers.

H. Utility Impact Analysis

To estimate the effects of proposed furnace and boiler standard levels on the electric utility industry, the Department intends to use a variant of DOE/EIA's National Energy Modeling System (NEMS [7]). DOE/EIA uses NEMS to produce its Annual Energy Outlook (AEO). The Department will use a variant, known as NEMS–BT, to provide key inputs to the analysis. Utility impact analysis is a comparison between model results for the base case forecast and policy cases in which proposed standards forecast are in place. The analysis will consist of forecasted differences between the base and standards cases for electricity generation, installed capacity, sales, and prices.

The use of NEMS for the utility analysis offers several advantages. As the official DOE energy forecasting model, it relies on a set of assumptions that are transparent and have received wide exposure and commentary. NEMS allows an estimate of the interactions between the various energy supply and demand sectors and the economy as a whole. The utility analysis will report the changes in installed capacity and generation by fuel type which result for each trial standard level.

DOE conducts the utility analysis as a policy deviation from the AEO, applying the same basic set of assumptions. For example, the operating characteristics (*e.g.*, energy conversion efficiency, emissions rates) of future electricity generating plants are as specified in the AEO reference case, as are the prospects for natural gas supply.

The Department also will explore deviations from some of the reference case assumptions to represent alternative futures. Two alternative scenarios use the high and low economic growth cases of AEO 2003 (The reference case corresponds to medium growth). The high economic

[7] For more information on NEMS, please refer to the U.S. Department of Energy, Energy Information Administration documentation. A useful summary is National Energy Modeling System: An Overview 2000, DOE/EIA–0581 (2000), March, 2000. DOE/EIA approves use of the name NEMS to describe only an official version of the model without any modification to code or data. Because this analysis entails some minor code modifications and the model is run under various policy scenarios that are variations on DOE/EIA assumptions, DOE refers to it by the name NEMS–BT (BT is DOE's Building Technologies office, under whose aegis this work has been performed previously named NEMS–BRS).

growth case assumes higher projected growth rates for population, labor force, and labor productivity, resulting in lower predicted inflation and interest rates relative to the reference case and higher overall aggregate economic growth. The opposite is true for the low-growth case. While supply-side growth determinants are varied in these cases, AEO assumes the same reference case energy prices for all three economic growth cases. Different economic growth scenarios will affect the rate of growth of electricity demand.

Because the current (AEO 2003) version of NEMS forecasts only to the year 2025, DOE must extrapolate results to 2035. The Department will use the approach developed by EIA to forecast fuel prices for the Federal Energy Management Program (FEMP). FEMP uses these prices to estimate the LCC of Federal equipment procurements. For petroleum products, the average growth rate for the world oil price over the years 2010–2025 is used in combination with the refinery and distribution markups from the year 2025 to determine the regional price forecasts. Similarly, natural gas prices are derived from an average growth rate figure in combination with regional price margins from the year 2025. Results of the analysis will include changes in residential electricity sales and installed capacity and generation by fuel type for each trial standard level, in five-year increments extrapolated to the year 2035.

AGA commented that DOE should consider AGA's analytical approach to assess impacts on utilities and should provide a venue to discuss power plant heat rates and emission factors. (AGA, No. 11 at pp. 6–7) DOE plans to use the NEMS model for analysis of affect on utilities. In past rulemakings, DOE has used NEMS to evaluate the impact on utilities because NEMS is a comprehensive and transparent model which provides estimates for the interactions between the various supply and demand sectors and the economy as a whole. The Department routinely updates the power plant heat rates to reflect the latest available version of NEMS, the model used to generate the utility and environmental results. This tool, which is available to stakeholders, uses national-average, power-plant-heat-rate forecasts that can be replaced or modified by users to conduct sensitivity analysis.

ACEEE commented that DOE should evaluate the impact of new standards on winter and summer peak loads. (ACEEE, No. 15 at p. 6) During the NOPR stage of the rulemaking, the Department will consider in its analysis impacts of standards on electricity system loads.

I. Environmental Assessment

DOE will conduct an assessment of the impacts of proposed furnace and boiler standard levels on certain environmental indicators, using NEMS–BT to provide key inputs to the analysis, as well as some exogenous calculations. Results of the environmental assessment are similar to those provided in AEO.

The environmental assessment provides emissions results to policymakers and interveners and fulfills requirements that the environmental effects of all new Federal rules be properly quantified and considered. The environmental assessment considers only two pollutants, sulfur dioxide (SO_2) and nitrogen oxides (NO_X), and one emission, carbon dioxide (CO_2). The only form of carbon tracked by NEMS–BT is CO_2, so the analysis will discuss carbon only in the form of CO_2. For each of the standard levels, DOE will calculate total emissions using NEMS–BT in part and using external analysis as needed.

The Department will conduct the environmental assessment as a policy deviation from the AEO, applying the same basic set of assumptions. For example, the emissions characteristics of an electricity generating plant will be exactly those used in AEO. Forecasts conducted with NEMS–BT also take into consideration the supply-side and demand-side effects on the electric utility industry. Thus, the Department's analysis takes into account any factors affecting the type of electricity generation and, in turn, the type and amount of airborne emissions the utility industry generates.

NEMS–BT tracks carbon emissions using a detailed carbon module which provides good results because of its broad coverage of all sectors and inclusion of interactive effects. Past experience with carbon results from NEMS suggests that emissions estimates are somewhat lower than emissions estimates based on simple average factors. One of the reasons for this divergence is that NEMS tends to predict that conservation displaces renewable generating capacity in the out years. On the whole, NEMS-BT provides carbon emissions results of reasonable accuracy at a level consistent with other Federal published results.

NEMS–BT also reports the two airborne pollutant emissions that DOE has reported in past analyses, SO_2 and NO_X. The Clean Air Act Amendments of 1990 set an SO_2 emissions cap on all power generation. The attainment of this target, however, is flexible among generators through the use of emissions allowances and tradable permits. NEMS includes a module for SO_2 allowance trading and delivers a forecast of SO_2 allowance prices. Accurate simulation of SO_2 trading tends to imply that physical emissions effects will be zero as long as emissions are at the ceiling. This fact has caused considerable confusion in the past. However, there is an SO_2 benefit from conservation in the form of a lower allowance price as a result of additional allowances from this rule, and, if it is big enough to be calculable by NEMS–BT, DOE will report this value. The NEMS–BT model also has an algorithm for estimating NO_X emissions from power generation. Two recent regulatory actions proposed by the EPA regarding regulations and guidelines for best available retrofit technology determinations and the reduction of interstate transport of fine particulate matter and ozone are tending towards further NO_X reductions and likely to an eventual emissions cap on nation-wide NO_X. 69 FR 25184 (May 5, 2004) and 69 FR 32684 (June 10, 2004). As with SO_2 emissions, a cap on NO_X emissions will likely result in no physical emissions effects from equipment efficiency standards.

The results for the environmental assessment are similar to a complete NEMS run as published in the AEO. These include power sector emissions for SO_2, NO_X, and carbon, and SO_2 prices, in five-year-forecasted increments extrapolated to the year 2035. DOE reports the outcome of the analysis for each trial standard level as a deviation from the AEO reference cases.

AGA commented that DOE should use full fuel-cycle emissions from the EPA's E–GRID system, and the Department should consider using AGA information on emission characteristics. (AGA, No. 11 at p. 7) DOE will consider these comments in conducting the environmental assessment in the NOPR phase of the rulemaking.

GAMA commented that residential furnaces and boilers are not vented in-house, so the Department may need to consider in-house emissions in the environmental assessment. (GAMA, No. 8 at p. 4) The Department will analyze environmental impacts of potential standards on furnaces and boilers, including in-house emissions (the local emissions from combustion in the furnace or boiler) in the NOPR phase of the rulemaking. The Department will use the same approach as it applied during the residential water heating rulemaking.

EEI commented that a primary output of NEMS should be impacts on oil and gas production, refining, transportation and delivery systems and asked how DOE will handle emissions impacts on domestic and foreign oil refining and impacts on oil imports. (EEI, No. 6 at p. 3) The NEMS model takes into consideration impacts on domestic oil and gas production, refining, transportation and delivery systems, as well as the imports of various petroleum products from outside the United States. It does not consider the emissions impacts from domestic or foreign oil refining. Thus, DOE will not be considering these emissions.

J. Employment Impact Analysis

The July 1996 Process Rule, 10 CFR part 430, subpart C, Appendix A4(7)(vi) includes employment impacts among the factors the Department should consider in selecting a proposed standard. The Process Rule states if the Department determines that a candidate standard level would be the direct cause of plant closures or significant losses in domestic manufacturer employment, that standard level will be presumed not to be economically justified. (10 CFR part 430, subpart C, Appendix A5(e)(3)(i)(B))

The Department estimates the impacts of standards on employment for equipment manufacturers, relevant service industries, energy suppliers, and the economy in general. DOE separates employment impacts into indirect and direct impacts. Direct employment impacts would result if standards led to a change in the number of employees at manufacturing plants and related supply and service firms. DOE estimated direct impacts in the manufacturer sub-group analysis.

Indirect impacts are impacts on the national economy other than in the manufacturing sector being regulated. Indirect impacts may result from both expenditures shifting among goods (substitution effect) and changes in income, which lead to a change in overall expenditure levels (income effect). DOE defines indirect employment impacts from standards as net jobs eliminated or created in the general economy as a result of increased spending on the purchase price of equipment and reduced customer spending on energy.

DOE expects new furnace and boiler standards to increase the total installed cost of equipment. DOE expects the same standards to decrease energy consumption, and therefore to reduce customer expenditures for energy. Over time, the increased total installed cost is paid back through energy savings. The savings in energy expenditures may be spent on new commercial investment and other items. Using an input/output model of the U.S. economy, this analysis seeks to estimate the effects on different sectors, and the net affect on jobs. DOE will estimate national impacts for major sectors of the U.S. economy in the NOPR. DOE will use public and commercially available data sources and software to estimate employment impacts. DOE will make all methods and documentation available for review.

BT has developed a spreadsheet model, Impact of Building Energy Efficiency Programs (IMBUILD), that it could use to analyze indirect employment impacts. IMBUILD is a special-purpose version of the Impact Analysis for Planning (IMPLAN) national input-output model which specifically estimates the employment and income effects of building energy technologies. IMBUILD is an economic analysis system that focuses on those sectors most relevant to buildings, and characterizes the interconnections among 35 sectors as national input-output matrices. The IMBUILD output includes employment, industry output, and wage income. One can introduce changes in expenditures due to appliance standards to IMBUILD as changes to existing economic flows, allowing estimation of the resulting net national impact on jobs by sector.

ACEEE commented that DOE should carefully consider impacts on service providers and the manufacturer employment impact analysis should include the employment impacts of consumer energy cost savings. (ACEEE, No. 15 at p. 6) The Department will consider these comments in its analysis during the NOPR stage of the employment impacts of furnace and boiler standards.

DOE believes increases or decreases in the net demand for labor in the economy estimated by the input/output model due to standards are likely to be very small relative to total national employment. It is difficult to project changes in employment for the following reasons:

(1) If unemployment is very low during the period when the standards are put into effect, it is unlikely that the standards alone could result in any change in national employment levels;

(2) Neither the Bureau of Labor Statistics (BLS) data nor the input-output model used by DOE include the quality or wage level of the jobs. The losses or gains from any potential employment change may be offset if job quality and pay also change; and

(3) The net benefits or losses from potential employment changes are a result of the estimated NPV of benefits or losses likely to result from standards. It may not be appropriate to separately identify and consider any employment impacts beyond the calculation of NPV.

The Department invites comments on the appropriate methodology that DOE should use in its employment impacts analysis.

K. Regulatory Impact Analysis

DOE will prepare a draft regulatory analysis under Executive Order 12866, ''Regulatory Planning and Review,'' which will be subject to review under the Executive Order by the Office of Information and Regulatory Affairs (OIRA). 58 FR 51735 (October 4, 1993).

As part of the regulatory analysis, the Department will identify and seek to mitigate the overlapping effects on manufacturers of new or revised DOE standards and other regulatory actions affecting the same equipment. Through manufacturer interviews and literature searches, the Department will compile information on burdens from existing and impending regulations affecting furnaces and boilers.

DOE's NOPR will include a complete quantitative analysis of alternatives to the proposed conservation standards. The Department plans to use the NES Spreadsheet Model (as discussed earlier in the section on the national impact analysis) to calculate the NES and the NPV corresponding to specified alternatives to the proposed conversation standards.

III. Candidate Energy Conservation Standards Levels

The Process Rule gives guidance to the Department to specify candidate standards levels in the ANOPR, but not to propose a particular standard. 10 CFR part 430, subpart C, appendix A, 4(c)(1). The Department intends to review the public comments received during the public comment period following the ANOPR public meeting and update the analyses appropriately for each equipment class before issuing the NOPR.

IV. Public Participation

A. Attendance at Public Meeting

The time and date of the public meeting are listed in the DATES section at the beginning of this notice of proposed rulemaking. Anyone who wants to attend the public meeting must notify Ms. Brenda Edwards-Jones at (202) 586–2945. As stated in the Addresses section of this document, a photo ID is required to enter the Ronald Reagan Building and International Trade Center.

B. Procedure for Submitting Requests To Speak

Any person who has an interest in today's notice, or who is a representative of a group or class of persons that has an interest in these issues, may request an opportunity to make an oral presentation. Please hand-deliver requests to speak, along with a computer diskette or CD in WordPerfect, Microsoft Word, PDF, or text (ASCII) file format to the address shown at the beginning of this advance notice of proposed rulemaking between the hours of 9 a.m. and 4 p.m., Monday through Friday, except Federal holidays. They may also be sent by mail or e-mail them to: *Brenda.Edwards-Jones@ee.doe.gov*.

Persons requesting to speak should briefly describe the nature of their interest in this rulemaking and provide a telephone number for contact. The Department requests persons selected to be heard to submit an advance copy of their statements at least two weeks before the public meeting. At its discretion, DOE may permit any person who cannot supply an advance copy of his or her statement to participate, if that person has made advance alternative arrangements with the Building Technologies Program. The request to give an oral presentation should ask for such alternative arrangements.

C. Conduct of Public Meeting

The Department will designate a DOE official to preside at the public meeting and may also use a professional facilitator to aid discussion. The meeting will not be a judicial or evidentiary-type public hearing, but DOE will conduct it in accordance with 5 U.S.C. 553 and section 336 of EPCA. (42 U.S.C. 6306) A court reporter will be present to record the transcript of the proceedings. The Department reserves the right to schedule the order of presentations and to establish the procedures governing the conduct of the public meeting. After the public meeting, interested parties may submit further comments on the proceedings as well as on any aspect of the rulemaking until the end of the comment period.

The public meeting will be conducted in an informal, conference style. The Department will present summaries of comments received before the public meeting, allow time for presentations by participants, and encourage all interested parties to share their views on issues affecting this rulemaking. Each participant will be allowed to make a prepared general statement (within time limits determined by DOE) before the discussion of specific topics. The Department will permit other participants to comment briefly on any general statements.

At the end of all prepared statements on a topic, DOE will permit participants to clarify their statements briefly and comment on statements made by others. Participants should be prepared to answer questions by DOE and by other participants concerning these issues. Department representatives may also ask questions of participants concerning other matters relevant to the public meeting. The official conducting the public meeting will accept additional comments or questions from those attending, as time permits. The presiding official will announce any further procedural rules or modification of the above procedures that may be needed for the proper conduct of the public meeting.

The Department will make the entire record of this ANOPR rulemaking, including the transcript from the public meeting, available for inspection at the U.S. Department of Energy, Forrestal Building, Room 1J–018 (Resource Room of the Building Technologies Program), 1000 Independence Avenue, SW., Washington, DC, (202) 586–9127, between 9 a.m. and 4 p.m., Monday through Friday, except Federal holidays. Any person may buy a copy of the transcript from the transcribing reporter.

D. Submission of Comments

The Department will accept comments, data, and information regarding all aspects of this ANOPR before or after the public meeting, but no later than the date provided at the beginning of this advance notice of proposed rulemaking. Please submit comments, data, and information electronically. Send them to the following e-mail address: *ResidentialFBANOPRComments@ee.doe.gov.* Submit electronic comments in WordPerfect, Microsoft Word, PDF, or text (ASCII) file format and avoid the use of special characters or any form of encryption. Comments in electronic format should be identified by the docket number EE–RM/STD–00–550, and wherever possible carry the electronic signature of the author. Absent an electronic signature, comments submitted electronically must be followed and authenticated by submitting the signed original paper document. No telefacsimiles (faxes) will be accepted.

Pursuant to 10 CFR 1004.11, any person submitting information that he or she believes to be confidential and exempt by law from public disclosure should submit two copies: one copy of the document including all the information believed to be confidential, and one copy of the document with the information believed to be confidential deleted. The Department of Energy will make its own determination about the confidential status of the information and treat it according to its determination.

Factors of interest to the Department when evaluating requests to treat submitted information as confidential include: (1) A description of the items; (2) whether and why such items are customarily treated as confidential within the industry; (3) whether the information is generally known by, or available from, other sources; (4) whether the information has previously been made available to others without obligation concerning its confidentiality; (5) an explanation of the competitive injury to the submitting person which would result from public disclosure; (6) when such information might lose its confidential character due to the passage of time; and (7) why disclosure of the information would be contrary to the public interest.

E. Issues on Which DOE Seeks Comment

The Department is interested in receiving comments and/or data to improve its analysis. The Department has asked for comments in a number of areas throughout this ANOPR. The Department is particularly interested in responses to the following questions and/or concerns:

1. Installation Model

Installation costs are a major part of the total consumer cost of a furnace or boiler and hence are a factor in the LCC analysis of potential standard levels. Due to the shortcomings of existing installation cost data, the Department developed an Installation Model to estimate installation costs (see section II.C.6 of this ANOPR). The Installation Model assumptions, methodology, and results regarding installation costs of residential furnaces and boilers are a recent development that stakeholders have not reviewed. In particular, the Department seeks information relevant to venting categories, markets, installation sizes, and the application of these components to establish installation costs for product classes under consideration in this rulemaking.

2. Venting Issues

Proper selection of vent materials and correct configuration of vent systems are essential for safe operation of any combustion appliance (see section II.C.6.c of this ANOPR). For gas boilers, NFPA 54 provides Category I venting guidelines; and for oil-fired appliances,

the applicable venting guideline is NFPA 31. However, the efficiency level at which the use of higher-cost Category III venting becomes necessary is not defined by these codes. For the analysis of gas boilers, DOE assumes that 20 percent of installations include Category III horizontal vents for construction-related reasons for efficiencies up to 84 percent AFUE. At 85 percent AFUE, DOE assumes Category III venting must be used 100 percent of the time. For oil-fired equipment, type L venting is required at all AFUE levels up to 84 percent. DOE assumes that at 85 percent and 84 percent AFUE for oil-fired boilers and oil-fired furnaces, respectively, the vent system must be upgraded to stainless AL–4C.

The Department seeks further data and comment relevant to the above assumptions. In particular, the Department is interested in getting data regarding: (1) The fraction of total gas boiler installations at each efficiency rating that use Category III horizontal venting; and (2) the fraction of total oil boiler and total oil furnace installations at each efficiency level that use stainless AL–4C (as opposed to type L).

3. Efficiency Distribution of Weatherized Gas Furnaces

For weatherized gas furnaces, estimates of national energy savings depend on the baseline model efficiency level. The Department has limited data on the efficiency distribution of current sales of this product class, and has estimated the baseline model efficiency level using historical data. The Department seeks information on the efficiency distribution of current sales of weatherized gas furnaces from manufacturers of packaged air conditioners (which incorporate weatherized gas furnaces), or others.

4. 81 Percent AFUE Furnaces With and Without Two-Stage Modulating Controls

Two-stage modulation is used in both condensing and non-condensing, non-weatherized gas furnaces. Because there are at least two major manufacturers that market a series of 81 percent AFUE, two-stage modulating furnace models and specify, for these furnaces, Category I vent systems incorporating Type B vent and Type B vent connectors, it appears that 81 percent AFUE, two-stage modulating furnaces do not pose vent safety issues associated with premature corrosion. For non-modulating 81 percent AFUE furnaces, the Department established that special venting treatments such as the use of Category III systems/components may be needed for many installations, and estimated the cost for these vent systems.

Because of the higher initial venting costs and increased safety concerns associated with non-modulating furnaces, DOE assumes that manufacturers would choose to manufacture two-stage modulating furnaces if DOE established a minimum standard of 81 percent AFUE. This assumption seems to be supported by recent developments in the marketplace. Based on information available to DOE, it appears that manufacturers have ceased to produce non-modulating models with AFUE of 81 percent or higher, and that at least two manufacturers are offering 81 percent AFUE modulating furnaces.

The current DOE test procedure incorporates an adjustment factor for two-stage modulating furnaces to reflect the impact of their different operation (''time on/time off'') compared to single-stage furnaces. The presence of this adjustment in the test procedure results in a national energy savings estimate for two-stage modulating furnaces that is nearly three times as great as the savings for 81 percent AFUE furnaces using non-modulating technology. DOE is uncertain whether the adjustment for modulating furnaces that is included in the test procedure yields an accurate estimate of the expected energy use of the product and solicits public comment on this issue. Even if the test procedure presents an accurate representation of this product's energy use, DOE solicits public comment on whether the test procedure should be modified to provide modulating furnaces with an AFUE rating that is a better reflection of its expected energy use. Based on the current test procedure, estimates for a two-stage modulating furnace with an AFUE rating of 81 percent is likely to show annual gas consumption in line with a non-modulating furnace with a higher AFUE rating.

The Department also wishes to receive data on venting installation practices/guidelines and any additional information/data on vent safety issues for all 81 percent AFUE non-weatherized gas furnaces.

5. Regulation of Furnace Electricity Consumption

The Department's analytical framework for the current rulemaking described an approach to regulate the electricity use of furnaces and boilers that would involve specifying a maximum annual electrical consumption. The current DOE test procedure provides a means to determine electrical consumption (kWh). However, 42 U.S.C. 6291(6) states that an ''energy conservation standard'' is either (A) ''a * * * level of energy efficiency'' or ''a * * * quantity of energy use,'' or (B) ''a design requirement for the products specified * * *. '' Item (A) above strongly suggests that a single ''energy conservation standard'' cannot have measures or descriptions for both energy efficiency and energy use. A standard that includes both a level of energy efficiency and a quantity of energy use (kWh of electricity) conflicts with the statutory language. 42 U.S.C. 6291(20) states that ''the term 'annual fuel utilization efficiency' means the efficiency descriptor for furnaces and boilers, determined using test procedures prescribed under section 323 * * *.'' Since the AFUE descriptor does not include electricity use, DOE cannot regulate the use of electricity by furnaces and boilers.

Based on the considered approaches and the statutory language, the Department has decided not to regulate electricity consumption of residential furnaces and boilers at this time using the above-mentioned descriptor approaches. The Department seeks comment on the above methods and information on any other method for developing a standard that would be consistent with the existing statutory authority.

V. Regulatory Review and Procedural Requirements

This advance notice of proposed rulemaking was submitted for review to OIRA in the Office of Management and Budget under Executive Order 12866, ''Regulatory Planning and Review.'' 58 FR 51735. If DOE later proposes amended energy conservation standards for residential furnaces and boilers, the rulemaking would likely constitute a significant regulatory action, and DOE would prepare and submit to OIRA for review the assessment of costs and benefits required by section 6(a)(3) of the Executive Order. In addition, various other analyses and procedures may apply to such future rulemaking action, including those required by the National Environmental Policy Act, 42 U.S.C. 4321 *et seq.*; the Unfunded Mandates Act of 1995, Public Law 104–4; the Paperwork Reduction Act, 44 U.S.C. 3501 *et seq.*; the Regulatory Flexibility Act, 5 U.S.C. 601 *et seq.*; and certain Executive Orders.

VI. Approval of the Office of the Secretary

The Secretary of Energy has approved publication of today's Advance Notice of Proposed Rulemaking.

Issued in Washington, DC, on July 13, 2004.

David K. Garman,

Assistant Secretary, Energy Efficiency and Renewable Energy.

[FR Doc. 04–16574 Filed 7–28–04; 8:45 am]

BILLING CODE 6450–01–P

Federal Register

Thursday,
July 29, 2004

Part IV

Department of Energy

Office of Energy Efficiency and Renewable Energy

10 CFR Part 431

Energy Conservation Program for Commercial and Industrial Equipment: Energy Conservation Standards for Commercial Unitary Air Conditioners and Heat Pumps; Proposed Rule

DEPARTMENT OF ENERGY

Office of Energy Efficiency and Renewable Energy

10 CFR Part 431

[Docket No. EE–RM/STD–01–375]

RIN 1904–AB09

Energy Conservation Program for Commercial and Industrial Equipment: Energy Conservation Standards for Commercial Unitary Air Conditioners and Heat Pumps

AGENCY: Office of Energy Efficiency and Renewable Energy, Department of Energy.

ACTION: Advance notice of proposed rulemaking and notice of public meeting.

SUMMARY: The Energy Policy and Conservation Act (EPCA) directs the Department of Energy (DOE or the Department) to consider whether to adopt the amended energy efficiency levels in the American Society of Heating, Refrigerating and Air-Conditioning Engineers, Inc. (ASHRAE)/ Illuminating Engineering Society of North America (IESNA) Standard 90.1–1999, or more stringent levels, for certain commercial unitary air conditioners and heat pumps with rated cooling capacities of 65,000 British thermal units per hour (Btu/h) and greater, but less than 240,000 Btu/h. The Department publishes this Advance Notice of Proposed Rulemaking (ANOPR) to solicit public comments on its preliminary analyses for this equipment.

DATES: The Department will hold a webcast on Thursday, August 12, 2004, from 1 p.m. to 4 p.m. If you are interested in participating in this event, please inform James Raba at (202) 586–8654.

The Department will hold a public meeting on Thursday, September 30, 2004, from 9 a.m. to 5 p.m., in Washington, DC. The Department must receive requests to speak at the meeting before 4 p.m., Thursday, September 16, 2004. The Department must receive a signed original and an electronic copy of statements to be given at the public meeting before 4 p.m., Thursday, September 23, 2004.

The Department will accept comments, data, and information regarding the ANOPR before or after the public meeting, but no later than Friday, November 12, 2004. See section IV, ''Public Participation,'' of this ANOPR for details.

ADDRESSES: You may submit comments, identified by docket number EE–RM/STD–01–375 and/or RIN number 1904–AB09, by any of the following methods:

- Federal eRulemaking Portal: *http://www.regulations.gov*. Follow the instructions for submitting comments.
- E-mail: *commercial airconditioner.anopr@ee.doe.gov*. Include EE–RM/STD–01–375 and/or RIN 1904–AB09 in the subject line of the message.
- Mail: Ms. Brenda Edwards-Jones, U.S. Department of Energy, Building Technologies Program, Mailstop EE–2J, ANOPR for Commercial Unitary Air Conditioners and Heat Pumps, EE–RM/STD–01–375 and/or RIN 1904–AB09, 1000 Independence Avenue, SW., Washington, DC, 20585–0121. Telephone: (202) 586–2945. Please submit one signed paper original.
- Hand Delivery/Courier: Ms. Brenda Edwards-Jones, U.S. Department of Energy, Building Technologies Program, Room 1J–018, 1000 Independence Avenue, SW., Washington, DC, 20585.

Instructions: All submissions received must include the agency name and docket number or Regulatory Information Number (RIN) for this rulemaking. For detailed instructions on submitting comments and additional information on the rulemaking process, see section IV of this document (Public Participation).

Docket: For access to the docket to read background documents or comments received, go to the U.S. Department of Energy, Forrestal Building, Room 1J–018 (Resource Room of the Building Technologies Program), 1000 Independence Avenue, SW., Washington, DC, (202) 586–9127, between 9 a.m. and 4 p.m., Monday through Friday, except Federal holidays. Please call Ms. Brenda Edwards-Jones at the above telephone number for additional information regarding visiting the Resource Room. Please note: The Department's Freedom of Information Reading Room (formerly Room 1E–190 at the Forrestal Building) is no longer housing rulemaking materials.

FOR FURTHER INFORMATION CONTACT: James Raba, U.S. Department of Energy, Office of Energy Efficiency and Renewable Energy, Building Technologies, EE–2J, 1000 Independence Avenue, SW., Washington, D.C. 20585–0121, (202) 586–8654. E-mail: *jim.raba@ee.doe.gov.* Francine Pinto, U.S. Department of Energy, Office of General Counsel, GC–72, 1000 Independence Avenue, SW., Washington, DC 20585, (202) 586–9507. E-mail: *Francine.Pinto@hq.doe.gov.*

SUPPLEMENTARY INFORMATION:

I. Introduction
A. Summary of the Analysis
1. Engineering Analysis
2. Building Energy Use and End-Use Load Characterization
3. Markups to Determine Equipment Prices
4. Life-Cycle Cost (LCC) and Payback Period (PBP) Analysis
5. National Impact Analysis
B. Authority
C. Background
1. History
2. Rulemaking Process
3. Equipment Definitions
4. Efficiency Levels
5. Test Procedure
II. Commercial Unitary Air Conditioner and Heat Pump Analyses
A. Market and Technology Assessment
1. Manufacturers
2. Equipment Efficiency
3. Equipment Shipments
B. Screening Analysis
C. Engineering Analysis
1. Baseline Equipment
a. Efficiency Level
b. Maximum Technologically Feasible Design
c. Representative Capacities
2. Methodology
3. Cost Assessment Approach
a. Teardown Analysis
b. Cost Model
c. Cost/Efficiency Curves
4. Supplemental Design Option Analysis
5. Alternative Refrigerant Analysis
D. Building Energy Use and End-Use Load Characterization
1. Approach
2. Preliminary Results
E. Markups to Determine Equipment Price
1. Approach
2. Estimated Markups
F. Life-Cycle Cost and Payback Period Analysis
1. Inputs to LCC Analysis
a. Total Installed Cost Inputs
b. Operating Cost Inputs
(1) Use of Whole-Building Simulations
(2) Electricity Price Analysis
(a) Tariff-Based Approach
(b) Hourly Based Approach
(c) Comparison of Tariff-Based and Hourly Based Prices
(3) Electricity Price Trend
(4) Repair Cost
(5) Maintenance Cost
(6) Lifetime
(7) Discount Rate
(8) Effective Date
2. Inputs to the Payback Period Analysis
3. Preliminary Results
a. Life-Cycle Cost Results
b. Payback Period Results
G. National Impact Analysis
1. National Energy Savings (NES)
a. National Energy Savings Inputs
(1) Annual Energy Consumption Per Unit
(2) Shipments
(3) Equipment Stock
(4) National Annual Energy Consumption
(5) Electricity Site-to-Source Conversion Factor
2. National Net Present Value
a. National Net Present Value Calculations

b. Net Present Value Inputs
(1) Total Annual Installed Cost
(2) Total Annual Operating Cost Savings
(3) Discount Factor
(4) Present Value of Costs
(5) Present Value of Savings
3. Shipments Model
a. Ownership Categories
b. Market Segments
c. Logit Probability Model
4. Preliminary Results
H. LCC Sub-Group Analysis
I. Manufacturer Impact Analysis
1. Sources of Information for the Manufacturer Impact Analysis
2. Industry Cash Flow Analysis
3. Manufacturer Sub-Group Analysis
4. Competitive Impacts Assessment
5. Cumulative Regulatory Burden
J. Utility Impact Analysis
K. Environmental Assessment
L. Employment Impact Analysis
M. Regulatory Impact Analysis
III. Candidate Energy Conservation Standards Levels
IV. Public Participation
A. Attendance at Public Meeting
B. Procedure for Submitting Requests to Speak
C. Conduct of Public Meeting
D. Submission of Comments
E. Issues on Which DOE Seeks Comment
1. Approaches to Analyses for Split Systems, Heat Pumps, and Niche Equipment
2. Alternative Refrigerant Analysis
3. Candidate Standards Levels
4. Design-Option Analysis and Maximum Energy Efficiency Levels
5. Industrial Buildings
6. Economizer Performance
7. Fan Energy Consumption
8. Equipment Markups
9. Hourly Based Electricity Prices
10. Forecasts of Electricity Prices
11. Equipment Lifetime
12. Maximum Market Share of Commercial Unitary Air Conditioning Equipment
13. Future Building Types Using Commercial Unitary Equipment
14. Customer Sub-Groups
15. Effective Date of New Standards and Phaseout Date of R–22 Refrigerant
16. Independent Expert Third-Party Reviews
a. Sample of Buildings
b. Building Loads and System Thermodynamics Simulation and Commercial Buildings Energy Consumption Survey Estimates of Energy Use
c. Supply Fan Energy Use While Ventilating
d. Incremental Markups
17. Effect of Income Taxes on Life-Cycle Cost
18. Technologies that Affect Full-or Part-Load Performance
19. Environmental Assessment
20. Rebound Effect
V. Regulatory Review and Procedural Requirements
VI. Approval of the Office of the Secretary

I. Introduction

A. Summary of the Analysis

The Energy Policy and Conservation Act (42 U.S.C. 6311 *et seq.*) establishes minimum energy conservation standards for certain industrial and commercial equipment, including the commercial unitary air conditioners and heat pumps under consideration in this rulemaking. The EPCA further requires that, if certain industry standards are amended after the date of enactment of the Energy Policy Act of 1992, DOE must establish a new energy efficiency standard at that amended level, or at a more stringent level if DOE determines, ''by rule published in the **Federal Register** and supported by clear and convincing evidence, that adoption of a uniform national standard more stringent than such amended ASHRAE/IESNA Standard 90.1 for such product would result in significant additional conservation of energy and is technologically feasible and economically justified.'' (42 U.S.C. 6313(a)(6)(A))

The Department conducted in-depth technical analyses for this ANOPR in the following areas: (1) Engineering, (2) building energy use and end-use load characterization, (3) markups to determine equipment prices, (4) life-cycle cost (LCC) and payback periods (PBP), and (5) national impacts.

1. Engineering Analysis

The engineering analysis establishes the relationship between the cost and efficiency of commercial unitary air conditioners and heat pumps. This relationship serves as the basis for cost/benefit calculations in terms of individual consumers, manufacturers, and the Nation. The engineering analysis identifies the representative baseline equipment (using R–22 as the refrigerant), develops the bill of materials and determines the costs, constructs the industry cost/efficiency curves, and evaluates the impact of using an alternative to R–22 refrigerant on the cost/efficiency relationship of certain commercial unitary air conditioners and heat pumps. (See section II.C. of this ANOPR for further details.)

2. Building Energy Use and End-Use Load Characterization

The building energy use and end-use load characterization analysis uses building simulations to estimate the energy consumption of commercial unitary air conditioning equipment at specified candidate standards levels. The 1995 Commercial Buildings Energy Consumption Survey (CBECS 95) data set was the primary source of the data used to develop the building set and its associated characteristics. The Department modeled each building in the set using the Building Loads and System Thermodynamics (BLAST) software. (See section II.D of this ANOPR for further details.)

3. Markups To Determine Equipment Prices

The equipment price analysis derives end-user or customer prices for more energy efficient commercial unitary air-conditioning equipment. To derive those prices, the Department differentiates between a baseline (manufacturer's) markup and an incremental (wholesaler's, general contractor's, and mechanical contractor's) markup, based on the distribution channel that the customer uses to purchase such equipment. (See section II.E of this ANOPR for further details.)

4. Life-Cycle Cost (LCC) and Payback Period (PBP) Analysis

When the Department is determining whether an energy efficiency standard for commercial unitary air-conditioning equipment is economically justified, EPCA directs DOE to consider, in part, the economic impact of potential standards on consumers. (42 U.S.C. 6313(a)(6)(B)(i)(I)) To assess that impact, the Department calculated the changes in LCCs which are likely to result from a candidate standard, as well as a distribution of PBPs. The foundation of the LCC and PBP analyses is the building set defined by the building energy use and end-use load characterization analysis. The Department created a representative sample from the building set, and determined the LCC and PBP for a given energy efficiency standard level for each building in the sample. Probability distributions characterize most other inputs to the LCC and PBP analysis. The input probability distributions combined with the building sample enabled the Department to generate LCC and PBP results as probability distributions using a simulation based on Monte Carlo statistical analysis methods. One of the most critical inputs to the LCC and PBP analysis is electricity price. The Department derived two sets of electricity prices to estimate annual energy expenses: A tariff-based estimate and an hourly based estimate. Although the Department used these two sets of electricity prices, it designated the tariff-based prices as the primary approach. In combination with the hourly electrical loads from the building simulations, the

tariff-based approach estimates the annual energy expense using electricity prices determined from electric utility tariffs collected in the year 2002. (See section II.F of this ANOPR for further details.)

5. National Impact Analysis

The national impact analysis assesses the national energy savings (NES) and the net present value (NPV) of total customer LCC and NES. The Department calculated both NES and NPV for a given energy efficiency standard level as the difference between a base case (without new standards, *i.e.*, EPCA levels) and the standards case (with new standards). The Department determined national annual energy consumption by multiplying the number of units or stock of commercial unitary air conditioners (by vintage) by the unit energy consumption (also by vintage). Cumulative energy cost savings is the sum of the annual NES determined over specified time periods. The national NPV is the sum over time of discounted net cost savings due to the energy savings. The Department calculated net savings each year as the difference between total operating cost savings (including electricity, repair, and maintenance cost savings) and increases in total installed costs (including equipment price and installation cost). As with the NES, cumulative cost savings is the sum of the annual NPV determined over specified time periods. One of the most critical inputs to this analysis is shipments data. The Department developed shipments projections under a base case and certain candidate standards cases. It determined that shipment projections under the standards cases were lower than those from the base case projection, due to the higher installed cost of the more energy-efficient unitary air conditioning equipment. Higher installed costs caused some customers to forego equipment purchases. As a result, the Department used the standards case shipments projection and, in turn, the standards case stock of commercial unitary air conditioners to determine the NES and NPV to avoid the inclusion of savings due to displaced shipments.

Table I.1 summarizes the key inputs, assumptions, and methodologies for each analysis area, and provides general references for finding the corresponding analyses in the Technical Support Document (TSD), a ''stand-alone'' report that provides the technical analyses and results in support of the information presented in this ANOPR. The ANOPR and TSD are available to interested parties on the Department's website at *http://www.eere.doe.gov/buildings/appliance_standards/ac_hp.html*. Also, Table I.1 provides references for finding the results of each analysis in this ANOPR.

TABLE I.1.—IN-DEPTH TECHNICAL ANALYSES CONDUCTED FOR THE ANOPR

Analysis area	Methodology	Key inputs	Key assumptions	ANOPR section for results
Engineering (TSD Chapter 5)	Tear Down Analysis supplemented with Design Option Analysis.	Component cost data	Maximum Technologically Feasible efficiency equals 12 EER.	Section II.C.3.c.
Building Energy Use and End-Use Load Characterization (TSD Chapter 6).	Whole-Building simulations using Building Loads and System Thermodynamics (BLAST) software.	1997 Commercial Building Energy Consumption Survey (CBECS) to identify and characterize the type of building using unitary air conditioners.	(1) BLAST characterization of part-load equipment performance; (2) Ventilation rates set equal to ASHRAE 62 requirements; and (3) Fan power consumption included during times of ventilation and heating.	Section II.D.2.
Markups to Determine Equipment Price (TSD chapter 7).	Assessment of financial reports to develop markups to transform manufacturer prices into customer prices.	(1) Characterization of distribution channels and markets; and (2) Financial reports characterizing firm costs, expenses, and profits.	Differentiation between a baseline markup and an incremental markup to relate manufacturer price to customer price.	Section II.E.2.
LCC and Payback Period (TSD Chapter 8).	Building-by-building analysis of a representative sample of commercial building customers (customers are appropriately weighted).	(1) Output from the Engineering, Building Simulation, and Equipment Price analyses; and (2) Electricity prices based on current electric utility tariffs.	Sample of commercial buildings representative of all unitary air conditioner users (industrial users have been excluded).	Section II.F.3.
National Impact (TSD Chapter 10).	Forecasts of unitary air conditioner costs and energy consumption to the year 2035.	(1) Average values from the LCC analysis; (2) Historical shipment data; and (3) Commercial building stock and forecasts of commercial building starts.	Responsiveness of shipments forecasts to total installed cost, operating costs, and business income.	Section II.G.4.

The Department consulted with interested parties while developing the above analyses to make clear the sources of data and analytical processes it used. The Department continues to seek input from all interested parties on the methodologies, inputs, and assumptions used to develop the analyses. In addition, certain analyses were very complex and questions raised by stakeholders led the Department to engage independent, third-party experts to review the Department's assumptions, approaches, data, and analytical methods used in particular for: (1) The sample of buildings used to represent commercial unitary air conditioning equipment; (2) the BLAST and CBECS estimates of energy use in these buildings; (3) supply fan energy use while ventilating; and (4)

incremental markup of commercial unitary air conditioning equipment prices. The third-party reviews are available to interested parties on the Department's website at *http://www.eere.doe.gov/buildings/appliance_standards/ac_hp.html*. The Department is requesting stakeholder comments about the third-party reviews concerning the subjects described in Issue 16, found in section IV.E., ''Issues on Which DOE Seeks Comment,'' of this ANOPR.

B. Authority

Title III of EPCA sets forth a variety of provisions designed to improve energy efficiency. Part C of title III (42 U.S.C. 6311–6317) establishes an energy conservation program for ''Certain Industrial Equipment'' and includes commercial air conditioning equipment, the subject of this proceeding. Part C provides definitions, test procedures, labeling provisions, energy efficiency standards, and authority to require information and reports from manufacturers.

EPCA established efficiency requirements that correspond to the levels in ASHRAE/IESNA Standard 90.1–1989, that went into effect on October 24, 1992. EPCA further provides that if the efficiency levels in ASHRAE/IESNA Standard 90.1 are amended after that date for certain covered commercial equipment, including commercial unitary air conditioners and heat pumps, the Department must establish an amended uniform national standard for such equipment at the new minimum level for each effective date specified in the amended ASHRAE/IESNA Standard 90.1, unless the Department determines, through a rulemaking supported by clear and convincing evidence, that a more stringent standard is technologically feasible and economically justified and would result in significant additional energy conservation. (42 U.S.C. 6313(a)(6)(A))

Under EPCA, if DOE adopts a more stringent standard, DOE must determine whether the benefits of the standard exceed its burdens to the greatest extent practicable, by considering the following seven factors (42 U.S.C. 6313(a)(6)(B)(i)):

(1) The economic impact of the standard on the manufacturers and consumers of the affected products;

(2) The savings in operating costs throughout the estimated average life of the product compared to any increases in the initial cost, or maintenance expense;

(3) The total projected amount of energy savings likely to result directly from the imposition of the standard;

(4) Any lessening of the utility or the performance of the products likely to result from the imposition of the standard;

(5) The impact of any lessening of competition, as determined in writing by the Attorney General, that is likely to result from the imposition of the standard;

(6) The need for national energy conservation; and

(7) Other factors the Secretary considers relevant.

Other statutory requirements are set forth in 42 U.S.C. 6313(a)(6)(B)(ii).

C. Background

1. History

On October 29, 1999, ASHRAE/IESNA adopted the energy efficiency standards for certain commercial heating and air conditioning equipment, including commercial unitary air conditioners and heat pumps, in ASHRAE/IESNA Standard 90.1–1999. On March 1, 2000, the Department published a notice of preliminary screening analysis to decide which of the ASHRAE/IESNA Standard 90.1–1999 standards to adopt immediately and which to analyze further. 65 FR 10984 (March 1, 2000). On January 12, 2001, the Department published a final rule adopting the energy efficiency levels in ASHRAE/IESNA Standard 90.1–1999 for 18 product categories and made a decision to further evaluate other products. 66 FR 3336 (January 12, 2001). In the final rule, DOE determined that further analysis was warranted for commercial unitary air conditioners and heat pumps with rated cooling capacities of 65,000 Btu/h and greater, but less than 240,000 Btu/h. This conclusion was based on DOE's screening analysis. As a result, the Department has conducted further analysis and is considering more stringent standards than those in ASHRAE/IESNA Standard 90.1–1999 for this equipment.

2. Rulemaking Process

The *Procedures, Interpretations and Policies for Consideration of New or Revised Energy Conservation Standards for Consumer Products* (the ''Process Rule''), 10 CFR Part 430, Subpart C, Appendix A, applies to the development of energy efficiency standards for consumer products. DOE has decided, however, to apply its procedures to the development of energy conservation standards for industrial equipment as well, including commercial unitary air conditioners and heat pumps standards, as appropriate. 62 FR 54817.

On June 13, 2001, the Department published a *Framework Document for Commercial Air Conditioner and Heat Pump Standards Rulemaking* (Framework Document) that describes the procedural and analytical approaches available to evaluate energy conservation standards for commercial unitary air conditioners and heat pumps. This document is available at *http://www.eere.energy.gov/buildings/appliance_standards/commercial/ac_hp.html*. The Department held a Framework Workshop on October 1, 2001, to discuss the procedural and analytical approaches for use in the rulemaking, and to inform and facilitate stakeholders' involvement in the rulemaking process. The analytical framework presented at the workshop described different analyses, such as LCC and PBP, the methods proposed for conducting them, and the relationships among the various analyses (see Table I.2). The ANOPR TSD describes the analytical framework in detail.

Statements received after publication of the Framework Document and at the October 1, 2001, Framework Workshop helped identify issues involved in this rulemaking, and provided information that has contributed to DOE's proposed resolution of these issues. Many of the statements are quoted and summarized in this ANOPR. A parenthetical reference at the end of a quotation or passage provides the location index in the public record.

TABLE I.2.—COMMERCIAL UNITARY AIR CONDITIONERS AND HEAT PUMPS RULEMAKING ANALYSES PURSUANT TO THE PROCESS RULE

ANOPR	NOPR	Final rule
Market and technology assessment	Revised ANOPR analyses	Revised analyses.
Screening analysis	Life-cycle cost sub-group analysis.	
Engineering analysis	Manufacturer impact analysis.	
Building energy use and end-use load characterization	Utility impact analysis.	

TABLE I.2.—COMMERCIAL UNITARY AIR CONDITIONERS AND HEAT PUMPS RULEMAKING ANALYSES PURSUANT TO THE PROCESS RULE—Continued

ANOPR	NOPR	Final rule
Markups to determine equipment price Life-cycle cost and payback period analyses Shipments analysis National impact analysis.	Environmental assessment. Employment impact analysis. Regulatory impact analysis.	

On one hand, many stakeholders commented that DOE should immediately adopt the minimum efficiency requirements in ASHRAE/IESNA Standard 90.1–1999 for commercial unitary air conditioners and heat pumps, rather than pursue a formal rulemaking, on grounds that ASHRAE's ''continuous maintenance'' process for Standard 90.1–1999 allows for faster adoption of any necessary revisions to the commercial unitary equipment standards than does a formal DOE rulemaking process. ''Continuous maintenance'' is an industry term for ASHRAE's current process for maintaining standards. Under this process, ASHRAE accepts a continual flow of proposals from the public for changes to its standards, which in turn can result in multiple proposed addenda to an ASHRAE standard on a regular basis. The ASHRAE continuous maintenance process contrasts with the previous periodic maintenance process that updated a standard at fixed, predetermined intervals. These same stakeholders commented that DOE's preliminary screening analysis did not demonstrate that more-cost-effective efficiency standards were feasible for commercial unitary equipment. In addition, by not immediately adopting the efficiency requirements in ASHRAE/IESNA Standard 90.1–1999, the Department would forego the national energy savings that would otherwise be realized in the next six to ten years before a DOE final rule becomes effective. Finally, many of these stakeholders commented that market confusion would ensue over which standards requirements are applicable if DOE adopts ASHRAE/IESNA Standard 90.1–1999 for some equipment and not for other equipment. (Air-Conditioning and Refrigeration Institute (ARI), No. 11 at pp. 2–4; Edison Electric Institute (EEI), No. 4 at pp. 1–2; Lennox International Inc. (Lennox), No. 7 at pp. 1 and 4; Public Workshop Tr., No. 2EE at p. 46; National Rural Electric Cooperative Association (NRECA), No. 3 at pp. 1–2; Southern Company Services (Southern Company), No. 5 at p. 1).[1]

In contrast to the above comments, many other stakeholders commented that DOE should abandon the ASHRAE/IESNA Standard 90.1–1999 continuous maintenance process and pursue a formal rulemaking. Many of them participated in the ASHRAE/IESNA Standard 90.1–1999 process and asserted that it was fundamentally flawed. These stakeholders also challenged the technical merits of the analysis used to update ASHRAE/IESNA Standard 90.1–1999, stating that: (1) Manufacturing cost estimates for more efficient equipment were not representative, *i.e.*, too high; (2) electricity prices did not capture the variability associated with an industry moving toward economic deregulation; and (3) the ASHRAE process used high discount rates and short payback periods to evaluate energy efficiency measures instead of a carefully constructed life-cycle cost analysis. (Alliance to Save Energy (ASE), No. 9 at pp. 1–2; American Council for an Energy-Efficient Economy (ACEEE), No. 10 at pp. 3, 6–7, and 10; Natural Resources Defense Council (NRDC), No. 6 at pp. 2–6; Public Workshop Tr., No. 2EE at p. 77).

The Department intends to make its findings available to the ASHRAE/IESNA Standard 90.1–1999 committee and other stakeholders to inform ASHRAE's ''continuous maintenance'' process. Furthermore, consistent with the approach outlined in the Department's January 12, 2001, final rule (66 FR 3348), DOE may engage in the ASHRAE continuous maintenance process by proposing an addendum to the commercial unitary air conditioner efficiency levels in ASHRAE/IESNA Standard 90.1–1999 based on its analysis as part of this rulemaking.

Also, if during the rulemaking process the Department concludes that the EPCA criteria for a more stringent energy conservation standard are not likely to be satisfied, then the Department may either adopt the energy efficiency levels in ASHRAE/IESNA Standard 90.1–1999 or any new addendum to ASHRAE/IESNA Standard 90.1 that establishes higher levels.

3. Equipment Definitions

Unitary package air conditioning units represent the heating, ventilating, and air conditioning (HVAC) equipment class with the greatest energy use in the commercial building sector in the United States. Equipment covered under this rulemaking—air-cooled package air conditioning and heating equipment with rated cooling capacities of 65,000 British thermal units per hour (Btu/h) and greater, but less than 240,000 Btu/h—accounts for the majority of the total shipped tonnage of unitary HVAC equipment for commercial building applications.

Under EPCA, the term ''small commercial package air conditioning and heating equipment'' means ''air-cooled, water-cooled, evaporatively-cooled, or water source (not including ground water source) electrically operated, unitary central air conditioners and central air conditioning heat pumps for commercial application which are rated below 135,000 Btu per hour (cooling capacity).'' (42 U.S.C. 6311(8)) The term ''large commercial package air conditioning and heating equipment'' means ''air-cooled, water-cooled, evaporatively-cooled, or water source (not including ground water source) electrically operated, unitary central air conditioners and central air conditioning heat pumps for commercial application which are rated at or above 135,000 Btu per hour and below 240,000 Btu per hour (cooling capacity).'' (42 U.S.C. 6311(9)) These definitions parallel the categories of equipment outlined in ASHRAE/IESNA Standard 90.1–1999. The standards for the product subcategories of water-cooled unitary central air conditioners rated ≤240,000 Btu/h, evaporatively cooled unitary central air conditioners, and water-source unitary central heat pumps rated ≤240,000 Btu/h were covered under a separate standards

[1] Example: ''(ARI, No. 11 at pp. 2–4)'' refers to a written statement that was submitted by the Air-Conditioning & Refrigeration Institute and is recorded in the Resource Room of the Building Technologies Program in the Docket under ''Commercial Central Air Conditioners and Heat Pumps'' as comment number 11, and the passage appears on pages 2 through 4 of that statement. Likewise, ''(Public Workshop Tr., No. 2EE at p. 46)'' refers to the page number of the transcript of the ''Framework Workshop'' held in Washington, DC, October 1, 2001.

rulemaking (66 FR 3336 (January 12, 2001)) and currently appear under 10 CFR Part 431 Subpart Q. In this rulemaking, the Department will limit its analysis to air-cooled equipment, which is the largest subset of the small and large unitary air conditioners and heat pumps covered by EPCA.

Based on data from EIA's 1995 Commercial Buildings Energy Consumption Survey (CBECS 95), the Department estimates that a significant part of the unitary package air conditioning market has gas heating rather than either air conditioning only or electric resistance heating. Hence, the Department has elected to base the engineering analysis on equipment with a gas heating section.

Several comments questioned whether the Department planned to consider engine-driven units, units operating with 100 percent outside air, and split systems as unique categories. (Public Workshop Tr., No. 2EE at p. 82; Public Workshop Tr., No. 2EE at p. 148) The Department has decided not to analyze engine-driven units or units operating with 100 percent outside air because they represent very specialized or niche applications, but may analyze them if necessary for the Notice of Proposed Rulemaking (NOPR) in this rulemaking proceeding. The Department did not analyze split systems explicitly because they are similar in technology and application to packaged units, which represent 77 percent of the combined sales of the commercial unitary air-conditioning market. (See Market Assessment section (Chapter 3) of the ANOPR TSD.) While the size constraints (*i.e.*, cabinet requirements) may be different for the two types of systems, the technologies and design choices required to increase the efficiency are similar. The Department intends to apply the results of the single package air-conditioning equipment analysis, and the resulting efficiency levels, to both single package and split system equipment. This method is consistent with the residential central air-conditioner rulemaking where DOE applied the analysis results from split system air conditioners (the most common residential central air conditioner configuration) to packaged air conditioners. This method is also consistent with the current efficiency levels in EPCA and ASHRAE/IESNA Standard 90.1–1999, which are the same for single package and split system equipment. This is identified as Issue 1 under ''Issues on Which DOE Seeks Comment'' in section IV.E of this ANOPR.

4. Efficiency Levels

The language of 42 U.S.C. 6313(a)(6)(A) requires DOE to establish an amended uniform national standard for commercial unitary air conditioners and heat pumps at the minimum levels for each date specified in the amended ASHRAE/IESNA Standard 90.1–1999, unless DOE determines, by rule and supported by clear and convincing evidence, that a more stringent standard is technologically feasible and economically justified and would result in significant additional energy conservation. Because the Department cannot consider levels lower than that of the most recent ASHRAE/IESNA Standard 90.1, the Department will consider the baseline efficiency to be the minimum level specified in ASHRAE/IESNA Standard 90.1–1999, which is the most recent amendment to ASHRAE/IESNA 90.1 that changed efficiency levels. Table I.3 presents the ASHRAE/IESNA Standard 90.1–1999 minimum efficiency levels.

TABLE I.3.—ASHRAE/IESNA STANDARD 90.1–1999 MINIMUM EER REQUIREMENTS* FOR UNITARY EQUIPMENT

Equipment type	Size category	Heating section type	Sub-category	Minimum efficiency
Air Conditioners, Air Cooled	≥65,000 Btu/h and <135,000 Btu/h.	Electric Resistance (or None)	Split System and Single Package.	10.3 EER
		All Other	Split System and Single Package.	10.1 EER
	≥135,000 Btu/h and <240,000 Btu/h.	Electric Resistance (or None)	Split System and Single Package.	9.7 EER
		All Other	Split System and Single Package.	9.5 EER
Heat Pumps, Air Cooled (Cooling Mode).	≥65,000 Btu/h and <135,000 Btu/h.	Electric Resistance (or None)	Split System and Single Package.	10.1 EER
		All Other	Split System and Single Package.	9.9 EER
	≥135,000 Btu/h and <240,000 Btu/h.	Electric Resistance (or None)	Split System and Single Package.	9.3 EER
		All Other	Split System and Single Package.	9.1 EER
Heat Pumps, Air Cooled (Cooling Mode).	≥65,000 Btu/h and <135,000 Btu/h. (Cooling Capacity)		47°F db/43°F wb Outdoor Air	3.2 COP
			17°F db/15°F wb Outdoor Air	2.2 COP
	≥135,000 Btu/h (Cooling Capacity)		47°F db/43°F wb Outdoor Air	3.1 COP
			17°F db/15°F wb Outdoor Air	2.0 COP

*The current version of ASHRAE/IESNA Standard 90.1 is the 2001 version, which contains identical minimum efficiency levels to the 1999 version of the standard.

The ASHRAE/IESNA Standard 90.1–1999 rates the cooling performance of commercial unitary air conditioners and heat pumps using the energy efficiency ratio (EER) and heating coefficient of performance (COP). (These are the same energy efficiency descriptors used in EPCA for this type of equipment.) The Department received comments that it should consider part-load performance as part of the screening process and a part-load descriptor in addition to EER in the present rulemaking. (ACEEE, No. 10 at p. 3; Lennox, No. 7 at p. 3; NRDC, No. 6 at p. 7) The ACEEE provided several comments about the efficiency level used in the performance standards. Specifically, it advocates that the performance standard include efficiency ratings for both full-load and part-load conditions, reflecting that equipment operates for many more hours at part-load conditions than at full-load conditions. Further, ACEEE suggests

that the performance standard incorporate integrated part-load value (IPLV) levels for commercial unitary air conditioning equipment. (ACEEE, No. 10 at pp. 3–4, and 7)

The Department understands that there are potential energy savings associated with technologies and techniques that operate under full- or part-load conditions and that can improve the net annual energy performance of a system, but which generally reduce the EER of commercial unitary air-conditioning equipment, or have no effect on EER. However, because the EPCA energy descriptor for commercial unitary air conditioners and air source heat pumps is an EER, and the test procedure does not account for part-load operation, DOE will not include a part-load performance descriptor.

Although this rulemaking covers both commercial unitary air conditioners and heat pumps, this ANOPR and the detailed analyses in the accompanying TSD cover only unitary air conditioners. The Department did not collect the necessary data for conducting the detailed technical analyses for unitary heat pumps for this ANOPR because unitary heat pumps represent only 9 percent of the total market for commercial unitary air conditioning and heat pump equipment above 65,000 Btu/h. Instead, the Department proposes to streamline the analysis for commercial unitary heat pumps and use a method similar to the ASHRAE committee's method to establish the minimum EER and COP levels for heat pumps. The Department understands that ASHRAE determined the minimum efficiency level for air conditioners and then agreed to a minimum heat pump EER after reviewing ARI's industry data. The minimum heat efficiency of the heat pump, defined by the heat pump COP, was set to correspond to the minimum EER using ARI data that correlated the heat pump COP to the heat pump EER. In section IV.E, ''Issues on Which DOE Seeks Comment,'' the Department requests input from interested parties on the need for conducting analyses specific to commercial unitary heat pumps.

5. Test Procedure

The Department began development of test procedures for commercial unitary air conditioners and heat pumps on April 14 and 15, 1998, when it held a public workshop to solicit views and information from interested parties. The Department held a second public workshop on October 18, 1998. The Department published a NOPR on August 9, 2000, and held a public workshop on September 21, 2000. 65 FR 48828. The Department intends to publish the test procedure final rule as soon as possible.

On June 12, 2001, the Department published a Framework Document that described procedural and analytical approaches to evaluate energy conservation standards for commercial unitary air conditioners and heat pumps, and presented this analytical framework to stakeholders during the workshop held on October 1, 2001. In response to DOE's Framework Document and within the context of this standards rulemaking proceeding, ACEEE filed comments on the test procedure used to assess equipment EER levels. The ACEEE believes that the temperature used for testing current EER levels represents the lowest outside temperature possible for properly evaluating peak performance, and that a higher temperature would more accurately represent peak conditions encountered in many parts of the United States. It also commented that the test procedure should include a maximum sensible heat ratio (SHR) to ensure that all equipment provides sufficient dehumidification capacity and prevents manufacturers from sacrificing dehumidification performance to satisfy minimum EER levels. (ACEEE, No. 10 at pp. 3–4, and 7)

The Department acknowledges that the test procedure for EER reflects equipment performance under a single condition and that this condition does not represent actual equipment performance under part-load conditions nor necessarily at the peak design condition, nor does it specify a maximum SHR. Furthermore, the Department understands that there are potential energy savings associated with technologies and techniques that improve the part-load performance of the equipment. However, because the Department believes that the test procedure referenced by the ASHRAE/IESNA Standard 90.1–1999 is widely accepted and well established, the Department has elected to follow the conventions of the ASHRAE/IESNA Standard 90.1–1999 and use the EER as the only descriptor for efficiency.

II. Commercial Unitary Air Conditioner and Heat Pump Analyses

This section includes a general introduction to each analysis section and a discussion of relevant issues addressed in comments received from interested parties.

A. Market and Technology Assessment

The Department reviewed existing marketing materials and literature, and interviewed manufacturers to get an overall picture of the market in the United States for commercial unitary air conditioners and heat pumps. Industry publications and trade journals, government agencies, and trade organizations provided most of the information, including: (1) Manufacturer market share, (2) equipment efficiency, and (3) shipments by capacity and efficiency level. This ANOPR discusses the information in the appropriate sections.

The Department has used the most reliable and accurate data available at the time of the analysis. All data are available for public review in the TSD that accompanies this ANOPR. The TSD is available to interested parties on the Department's Web site at *http://www.eere.doe.gov/buildings/appliance_standards/ac_hp.html.* The Department welcomes and will consider any recommendations of additional data.

1. Manufacturers

There are six major domestic manufacturers of the equipment covered under this rulemaking. Four companies, Carrier Corporation (Carrier), The Trane Company (Trane), Lennox International, Inc. (Lennox), and York International Corporation (York) each hold a major share of the market for commercial unitary air conditioners and heat pumps. Two other manufacturers, AAON, Inc. (AAON) and Rheem Manufacturing Company (Rheem), hold significant niche market shares. The AAON corporation manufactures and sells high efficiency, air-cooled equipment almost exclusively to large corporate accounts. Rheem produces mostly smaller-capacity models in all the categories. Among the six major manufacturers, Carrier and Trane command a majority of the market for commercial unitary air conditioning equipment, followed by Lennox, York, AAON, and Rheem. For more detail on major manufacturers and market share, refer to the market assessment section (Chapter 3) of the ANOPR TSD.

2. Equipment Efficiency

In its analysis of the equipment efficiency data from ARI's Unitary Large Equipment Directory, January 2002, the Department found that most models of equipment manufactured by the six major domestic manufacturers met or exceeded the ASHRAE/IESNA Standard 90.1–1999 energy efficiency levels.

Also, in its analysis of the ARI Unitary Large Equipment Directory, January 2002, the Department found it could be easy to misinterpret the number of base models for each parent

company because each parent company manufactures similar models under different ''brands'' or manufactures base models with relatively superficial design changes around a base model. Consequently, the Department estimated the number of actual base models listed for each parent company in the ARI Directory. (See Market and Technology Assessment (Chapter 3, section 3.7.3) of the ANOPR TSD.)

3. Equipment Shipments

The Department extracted and documented information related to equipment shipments by domestic manufacturers from U.S. Census Bureau Current Industrial Reports. The United States (U.S.) Census Bureau data expresses cooling capacity ranges in a slightly different way from the DOE rulemaking equipment classifications. The major classifications presented in the U.S. Census Bureau data for single and split system air conditioners are for cooling capacity ratings 65,000 Btu/h to 134,999 Btu/h and 135,000 Btu/h to 249,999 Btu/h. (See U.S. Census Bureau Current Industrial Report for ''Refrigeration, Air Conditioning, and Warm Air Heating Equipment: 2001,'' (MA333M(01)–1), at *http://www.census.gov/industry/1/ma333m01.pdf.*) For heat pumps, the U.S. Census Bureau data list shipments for capacities rated greater than 65,000 Btu/h. In section II.G below, ''National Impact Analysis,'' the Department used the shipments data in its development of a Shipments Model for forecasting future equipment shipments.

B. Screening Analysis

This section describes the technology/design options and a process for screening these options as part of the DOE rulemaking. Screening eliminates certain design options from further consideration in the engineering analysis phase of the rule development. The Process Rule established four factors DOE uses for screening design options: (1) Technological feasibility; (2) practicability to manufacture, install, and service; (3) adverse impacts on equipment utility or equipment availability; and (4) adverse impacts on health and/or safety. 10 CFR Part 430, subpart C, Appendix A, under paragraph 5(b). In view of these factors, the technology/design options DOE considered as part of this rulemaking fall into two categories based on their development status and on their impacts on EER: emerging technologies that can enhance EER and commercial technologies that can enhance EER. For more detail on how the Department developed the technology options and the process for screening these options, refer to the technology and screening section (Chapter 4) of the ANOPR TSD.

First, the Department considered emerging technologies that encompass design options currently not available on the commercial market but that are being examined in the laboratory as possible means to enhance efficiency. These are:

- Electro-hydrodynamic enhanced heat transfer;
- Copper rotor motor with improved efficiency; and
- Non-hydrofluorocarbon/hydrochlorofluorocarbon (HFC/HCFC) refrigerants (*e.g.*, ammonia, hydrocarbons, carbon dioxide).

Second, the Department considered commercial technologies that are currently available for unitary air conditioners or similar equipment, and which have an impact on the EER (nominal full-load) rating under DOE's test conditions. These are:

- Evaporator coil area (keeping the number of coil rows the same);
- Condenser coil area (keeping the number of coil rows the same);
- Coil rows (keeping face area the same);
- Condenser fan diameters;
- Evaporator fan diameters;
- Air leakage paths within unit;
- Coil rows (keeping coil heat transfer performance the same);
- Microchannel heat exchangers;
- Deep coil heat exchangers;
- Low-pressure-loss filters;
- High efficiency fan motors;
- High efficiency compressors;
- Air foil centrifugal fans;
- Backward-curved centrifugal fans;
- Synchronous (toothed) belts;
- Direct-drive fans; and
- High efficiency propeller condenser fans.

Several of these technologies have penetrated the commercial equipment market and raised the available EER range. Because the EPCA energy descriptor for commercial unitary air conditioners and air source heat pumps is an EER, only those design options that improve the EER (nominal full-load) rating under DOE's test procedures were viable for consideration in the engineering analysis. DOE addresses matters with respect to other technologies that can improve the net annual energy performance of a system, but which generally reduce or have no effect on EER, as Issue 18 under ''Issues on Which DOE Seeks Comment'' in section IV.E of this ANOPR.

C. Engineering Analysis

The engineering analysis establishes the relationship between the cost and efficiency of commercial unitary air conditioners and heat pumps. This relationship serves as the basis for cost/benefit calculations in terms of individual consumers, manufacturers, and the Nation. The engineering analysis identifies the representative baseline equipment (using R–22 as the refrigerant), develops the bill of materials and determines the costs, constructs the industry cost/efficiency curves, and evaluates the impact of using an alternative to R–22 refrigerant on the cost/efficiency relationship of certain commercial air conditioners and heat pumps. The R–22 refrigerant is in current use and will phase out of new equipment in 2010 in compliance with the Environmental Protection Agency's (EPA's) requirements under the Clean Air Act of 1990, as amended (42 U.S.C. 7401 *et seq.*).

1. Baseline Equipment

As discussed above, the engineering analysis considered only single package commercial unitary air conditioning equipment with gas heat in the estimate of the cost/efficiency relationship for the equipment classes under consideration. The Department analyzed single package commercial unitary air conditioning equipment with gas heat rather than single package units with electric heat or no heating section, because the gas heat units represent about 77 percent of the air conditioners covered in this rulemaking. (See the Market and Technology Assessment, section 3.6.1 of the ANOPR TSD, that provides information on historical shipments and efficiencies.) Although the Department did not explicitly analyze split air conditioning systems in the engineering analysis, the Department believes that the results of the unitary air conditioning equipment analysis apply to the split systems and that both unitary and split systems have equivalent cost/efficiency relationships. (See the engineering analysis, section 5.2 of the ANOPR TSD.) The Department discussed this approach during the initial interviews with manufacturers, and it is consistent with the ASHRAE methodology used to set the ASHRAE/IESNA Standard 90.1–1999.

The Department proposes to address the energy efficiency of commercial unitary heat pump equipment in a way that is consistent with the ASHRAE methodology used to set the ASHRAE/IESNA Standard 90.1–1999 levels for unitary air conditioning systems with heat pump heating, rather than conduct an explicit analysis of the unitary and split heat pump systems. According to Census Bureau data, commercial unitary

heat pumps with a capacity greater than 65,000 Btu/h represent about 10 percent of products covered under this rulemaking. Although the census data do not specify the quantity, the Department believes that most of these units have less cooling capacity and are within the 65,000 Btu/h to 135,000 Btu/h size range. (See the Market and Technology Assessment, section 3.6.1 of the ANOPR TSD, that provides information on historical shipments and efficiencies.) Under the ASHRAE process, the ASHRAE 90.1 committee worked with ARI to develop new efficiency levels for inclusion in ASHRAE/IESNA Standard 90.1–1999. For heat pumps in these capacity ranges, ARI supplied the ASHRAE 90.1 committee with curves relating the COP as a function of EER. The committee then set the minimum COP levels based on EER. The Department used a similar process in the residential central air conditioner and heat pump rulemaking, where it established minimum Heating Seasonal Performance Factors (HSPF) for heat pumps using functions relating the HSPF to the Seasonal Energy Efficiency Ratio (SEER). The Department intends to do the same for the NOPR analysis for commercial unitary air conditioning and heat pump equipment.

For more detail on baseline equipment, refer to the engineering analysis, section 5.3 of the ANOPR TSD. The Department requests comments from interested parties about this proposed approach to the engineering analysis, and has identified it as Issue 1 under ''Issues on Which DOE Seeks Comment'' in section IV.E. of this ANOPR.

Identification of the baseline for commercial unitary air conditioning equipment requires both establishing a baseline efficiency level and selecting a size typical of that equipment to represent the different capacity ranges of commercial, unitary, air conditioning equipment classes: ≥65,000 Btu/h to <135,000 Btu/h; and ≥135,000 Btu/h to <240,000 Btu/h.

a. Efficiency Level

As described above, the Department selected ASHRAE/IESNA Standard 90.1–1999 for the baseline efficiency levels both for ≥65,000 Btu/h to <135,000 Btu/h and ≥135,000 Btu/h to <240,000 Btu/h classes of commercial unitary air conditioning equipment. To aid in analyzing the economic impact of increasing standard levels, DOE examined the costs associated with moving from EPCA levels to the ASHRAE Standard 90.1–1999 levels. Additionally, to provide a reasonable span of efficiency levels to evaluate, DOE limited the efficiency levels under consideration to those that are commercially available.

In some cases, manufacturers' product lines span efficiency ranges from levels below the baseline to levels above the baseline. To properly assess the incremental cost of increasing the efficiency level beyond the baseline level, DOE evaluated the manufacturing costs of the equipment with efficiency levels below the baseline and included these data in the industry cost/efficiency curves. The Department determined the manufacturing costs of this lower efficiency equipment in the same way as it did for the equipment above the baseline efficiency level. For more detail on efficiency levels, refer to the discussion of efficiency levels in section 5.3.1 of the ANOPR TSD.

b. Maximum Technologically Feasible Design

In previous rulemakings, the Department relied on the maximum technologically feasible design to define the highest level of energy efficiency it would evaluate. The maximum energy efficiency level that is technologically feasible is often referred to as ''max tech.'' Technological feasibility requires that a system be not only theoretically possible, but also capable of being designed, constructed, and operated. At the time the engineering analysis was conducted, the highest efficiency level for commercial unitary air conditioners in the ≥65,000 Btu/h to <240,000 Btu/h range available on the market was 11.5 EER. The engineering analysis used reverse engineering on this existing equipment to develop a cost-efficiency curve up to 11.5 EER. Extending the curve beyond 11.5 EER required extrapolation and then verification using design-option analysis modeling. The Department's modeling indicated that with some additional conventional-type design modifications, such as increases to the size of heat exchangers and modification of the airflow paths (both of which may need new and larger cabinets), the highest practical efficiency level was about 12.0 EER. To limit uncertainty associated with the extrapolated curve beyond 11.5 EER, the maximum efficiency level that DOE evaluated in the engineering analysis was 12.0 EER. The Department verified the extrapolated cost-efficiency curve using design-option modeling between 11.5 and 12.0 EER. Beyond the 12.0 EER level, the Department would need to consider technologies that are not currently available or non-conventional technologies that are not typically in use by the industry.

The Department seeks comments on commercial unitary air-conditioning equipment designs that are currently used in the engineering analysis. The Department will review public comments after the ANOPR meeting and during the NOPR phase of the rulemaking to further evaluate design options, including the following, which could achieve higher technologically feasible efficiency levels.

- Larger heat transfer surface area for the tube and fin condensers accomplished by increasing the number of rows or by increasing the face area of the condenser (or some combination of both), while limiting the minimum condensing temperature to 110 °F with 10 °F of subcooling capability.
- Larger heat transfer surface area for the tube and fin evaporators accomplished by increasing the number of rows or by increasing the face area of the evaporator (or some combination of both), but limiting the maximum evaporating temperature to 52 °F and the sensible heat ratio to 0.75.
- Use of premium efficiency motors with compressors, condenser fans, and evaporator blowers.
- Use of larger diameter airfoil or backward-curved blade blowers for evaporators.
- Use of larger diameter airfoil fans for condensers.

Since the time the engineering analysis was completed in late 2002, several new commercial unitary air conditioners, with rated efficiency levels greater that 12.0 EER, have become available on the market. The Department requests comments from stakeholders on any commercial unitary air conditioners with rated efficiency levels above 12.0 EER. This is identified as Issue 4 under ''Issues on Which DOE Seeks Comment'' in section IV.E of this ANOPR.

c. Representative Capacities

After reviewing the available single package equipment and interviewing four major commercial air-conditioning equipment manufacturers and two niche manufacturers, the Department set the representative capacity (*i.e.*, the equipment capacity to be analyzed in detail for this capacity range) for the ≥65,000 to <135,000 Btu/h capacity range at 7.5 tons and the representative capacity of the ≥135,000 to <240,000 Btu/h capacity range at 15 tons. An air conditioning ton is equivalent to 12,000 Btu/h of cooling capacity. Also, for consistency with the ASHRAE standards development process, DOE chose the same equipment capacities of 7.5 tons and 15 tons to represent these commercial unitary air conditioning

equipment classes. These nominal capacities represent units which, according to the industry, are volume shipment points in the capacity range. Because manufacturers do not necessarily manufacture commercial unitary air conditioning equipment with the exact capacity of these units (90,000 Btu/h and 180,000 Btu/h), the Department uses the industry standard terminology of nominal ''tons'' for consistency with the current equipment catalogs.

Similarly, during the development of the ASHRAE 90.1–1999 standard, ASHRAE chose the 7.5- and 15-ton capacities as representative capacities for its analysis. In addition, these capacities fall close to the middle of the capacity range. For some manufacturers, these sizes represent their optimum design, *i.e.*, where they have optimized the ratio of cooling capacity to manufacturing cost. Increasing the efficiency of these models would generally be very difficult and expensive because the manufacturers have packed as much component equipment as possible into the smallest possible cabinet size. On the other hand, some manufacturers may have optimized their equipment at a higher capacity and, therefore, may initially use a larger cabinet for the evaluated equipment. Increasing the efficiency of this equipment would be less expensive because there intrinsically is more room in the cabinet to increase coil size and add other types of energy-saving devices without moving to the next larger cabinet.

After DOE reviewed available products in each equipment class and interviewed several manufacturers, it found that a majority of the manufacturers who were interviewed agreed that the 7.5-ton and 15-ton capacities adequately represent the ≥65,000 to <135,000 Btu/h and ≥135,000 to <240,000 Btu/h equipment classes, respectively, and the wide array of design constraints. Lennox, however, suggested that 10-ton and 20-ton units would provide a better representation of the baseline, because larger capacity units are generally the hardest to upgrade and are, therefore, the units that would force design changes in a specific line of commercial unitary air-conditioning equipment. Also, Lennox stated that 7.5-ton units are generally built off of 10-ton cabinets and 15-ton units are generally built off of 20-ton cabinets. (Public Workshop Tr., No. 2EE at pp. 87 and 88)

The Department believes that the 7.5-ton and 15-ton capacities are appropriate for the following reasons: (1) They are near the middle of the capacity range; (2) a majority of the manufacturers interviewed agreed that these capacities adequately represented the equipment classes; (3) they are consistent with the capacities chosen for the ASHRAE standards development process; and (4) these capacities represent both equipment that was cost-optimized (cabinet-size constrained), as well as equipment that was not constrained within the cabinet, to account for variations among manufacturers. In addition, data regarding commercial unitary air-conditioning system shipments by capacity, while not precise, suggest that shipments of 7.5-ton and 15-ton units are significantly higher than those of 10- and 20-ton systems, respectively. Therefore, it is more appropriate to select 7.5- and 15-ton units as representative capacities for their respective capacity ranges. Finally, the Department reviewed cabinet sizes and capacities for commercial unitary air conditioners and found a wide variation of cabinet sizes, and an equally wide variation of corresponding capacities within each cabinet size. Many 7.5-ton units are built off of 7.5-, 8.5-, 10-, 12-, and 12.5-ton cabinet sizes; and many 15-ton units are built off of 15-, 20-, and 25-ton cabinet sizes. Therefore, using 7.5- and 15-ton capacity sizes for several different manufacturers and aggregating the results will capture the diversity of cabinet sizes and space constraints for the industry. The Department will consider manufacturer-specific cabinet sizes and conversion costs when it conducts the MIA. For more detail on representative capacities, refer to the Engineering Analysis, section 5.3.2 of the ANOPR TSD.

2. Methodology

At the October 1, 2001, Framework Workshop, the Department solicited stakeholder comments on the most appropriate approach for the engineering analysis. However, there was no clear consensus among the respondents for a particular approach. The Northwest Power Planning Council (NWPPC) expressed the view that transparency should be the primary criterion for selecting one approach or another. (Public Workshop Tr., No. 2EE at p. 132) The Natural Resources Defense Council also commented on the need for a transparent approach. (NRDC, No. 6 at p. 6)

The ACEEE and NRDC commented that DOE should not use the efficiency-level approach because of concerns about the lack of transparency of data and the accuracy of cost estimates that could result from this approach. (ACEEE, No. 10 at p. 4; NRDC, No. 6 at p. 4) The ACEEE commented that developing estimates of uncertainty, *i.e.*, confidence intervals, for manufacturing cost estimates is irrelevant in the case of an efficiency-level analysis, due to the inability to validate the accuracy of those costs. It also noted that the incremental values ARI provided in the past were much greater than those the Northeast Energy Efficiency Partnerships (NEEP) and the Consortium for Energy Efficiency (CEE) found empirically. (ACEEE, No. 10 at pp. 8–10)

On a related issue, ACEEE, ASE, and NRDC argued that the Department should not use cost data that represent the 90th percentile of equipment cost used during the development of the ASHRAE/IESNA Standard 90.1–1999, because these costs are not representative of most equipment and would bias any life-cycle cost analysis away from higher standards. (ACEEE, No. 10 at p. 6; ASE, No. 9 at p. 2; NRDC, No. 6 at pp. 4–7) The NRDC further criticized the 90th percentile approach because it used the costs of the most expensive manufacturer, those costs could not be verified independently, and one erroneous data point could skew the cost data. Instead, NRDC recommended using third-party cost estimates and presenting them to the public for evaluation, even though NRDC believed that third-party estimates tended to be high because of the difficulty associated with anticipating innovation. (NRDC, No. 6 at p. 7) The ACEEE also noted that ''revealed costs,'' *i.e.*, the cost differential between high and low efficiency equipment in regions where high efficiency units have appreciable sales volumes, can provide insight into cost differentials. (Public Workshop Tr., No. 2EE at p. 65) Along these lines, NEEP submitted equipment incremental cost data related to the CEE efficiency levels. (NEEP, No. 8 at p. 3) The Alliance to Save Energy recommended applying reverse engineering analysis, particularly teardowns, to estimate future costs of different efficiency levels and supplementing this information with cost data obtained from market surveys performed in regions where products at higher efficiency levels have higher market shares. (ASE, No. 9 at p. 3)

As a result of the above comments from stakeholders, the Department used a cost assessment approach and supplemented the data with a design option analysis to develop incremental cost/efficiency curves for the two representative capacities described above. The reverse engineering analysis relied on creating bills of materials

(BOMs) for a sample of existing equipment that uses R–22 refrigerant. The Department developed the BOMs through the reverse engineering of either physical teardowns or catalog teardowns. The Department then entered the BOMs into a cost model and used that model to estimate the manufactured cost for each piece of equipment. The Department then aggregated the costs of the equipment and their associated efficiencies and fit them to a curve to represent the cost/efficiency behavior of the industry. In addition, the Department derived confidence intervals that described the accuracy of the curve, based on the variability of the estimated manufacturer costs. The Department then used the design option analysis to validate the accuracy of the curve between 11.5 and 12.0 EER, where there are no existing equipment data points, by using the cost model and a performance model to simulate equipment at higher efficiency levels. The last step in the process—the alternative refrigerant analysis—compared the cost/efficiency behavior of R–410a products to the R–22 cost/efficiency curve by using the cost model and the performance model to simulate R–410a products. For more detail on the Department's methodology, refer to the Engineering Analysis, section 5.4 of the ANOPR TSD.

3. Cost Assessment Approach

The use of the cost assessment (reverse engineering) approach provides useful information, including the identification of potential technology paths manufacturers use to increase efficiency. Under this type of analysis, the Department physically analyzes actual equipment on the market (*i.e.*, dismantles them component-by-component) or generates BOMs from publicly available manufacturer catalogs and specifications. This enables the Department to determine what technologies and designs manufacturers employ to increase efficiency. The Department then uses independent costing methods or manufacturer and component supplier data to estimate the costs of the components. This approach has the distinct advantage of using ''real'' market equipment to ascertain the technologies that manufacturers use as the bases for estimating the costs of reaching higher efficiencies.

The primary disadvantage of reverse engineering is the time and effort required to analyze the existing equipment. The Department needs several models of commercial unitary air conditioning equipment from various manufacturers to ensure that it identifies a broad representation of technological paths for increasing efficiency. In addition, because the Department only analyzes equipment in the market, the analysis might not capture prototypical designs, thus making it difficult to establish the maximum technologically feasible designs. Therefore, the Department has supplemented the reverse engineering process with a design option analysis that considers the technologies required to increase efficiency beyond what is currently available.

a. Teardown Analysis

The Department used a teardown analysis (or physical teardown) to determine the production cost of a piece of equipment by disassembling the equipment ''piece-by-piece'' and estimating the material and labor cost of each component. A supplementary method called a catalog teardown uses published manufacturer catalogs and supplementary component data to estimate the major physical differences between a piece of equipment that has been physically disassembled and another piece of similar equipment. The teardown analysis that DOE performed for the engineering analysis includes four physical teardowns and 14 catalog teardowns, for a total of 18 equipment teardowns. Tables II.1 and II.2 show the distribution of equipment teardown analyses that DOE performed for the 7.5-ton and 15-ton commercial unitary air conditioning equipment. The Department selected the equipment to provide a full range of efficiency levels and included equipment from similar product lines that had both higher and lower energy efficiency ratings. For more detail on the teardown analysis, refer to the Engineering Analysis, section 5.5 of the ANOPR TSD.

TABLE II.1.—NUMBER OF COMMERCIAL UNITARY AIR CONDITIONERS SELECTED FOR TEARDOWN ANALYSIS IN THE ≥65,000 BTU/H TO <135,000 BTU/H EQUIPMENT CLASS

EER Range	8.6–9.0	9.1–9.5	9.6–10.0	10.1–10.5	10.6–11.0	11.1–11.5
Equipment, Physical Teardown	0	0	0	1	1	0
Equipment, Catalog Teardown	2	0	0	2	0	3

TABLE II.2.—NUMBER OF COMMERCIAL UNITARY AIR CONDITIONERS SELECTED FOR TEARDOWN ANALYSIS IN THE ≥135,000 BTU/H TO <240,000 BTU/H EQUIPMENT CLASS

EER Range	8.6–9.0	9.1–9.5	9.6–10.0	10.1–10.5	10.6–11.0	11.1–11.5
Equipment, Physical Teardown	0	0	1	0	0	1
Equipment, Catalog Teardown	1	3	0	1	0	2

b. Cost Model

The cost model analysis created cost estimates for each of the 18 commercial unitary air conditioners, including all direct manufacturing costs and a manufacturer's markup, which covers corporate overhead expenses. This is the price at which DOE estimates a manufacturer sells the equipment to distributors, resellers, and similar parties; it is not the final cost to the end-user because it does not include the distribution markups and contractor installation costs.

In converting physical information about the equipment into cost information, the Department reconstructed manufacturing processes for each component, using internal expertise and knowledge of the methods used by the industry. The Department used assumptions regarding the manufacturing process parameters, *e.g.*, equipment use, labor rates, tooling depreciation, and cost of purchased raw materials, to determine the value of each component. It then summed the values of the components into assembly costs and, finally, the total equipment cost. The equipment cost includes the

material, labor, and overhead costs associated with the manufacturing facility. The material costs include both direct and indirect materials. The labor rates include fabrication, assembly, and indirect and overhead (burdened) labor rates. The overhead costs include equipment depreciation, tooling depreciation, building depreciation, utilities, equipment maintenance, and rework. The Department also applied a manufacturer markup of 1.23 to the equipment cost to arrive at a final manufacturer cost. The markup accounts for the corporate overhead that DOE believes to include sales and general administration, research and development, and profit.

Both ACEEE and NRDC commented that the actual, retrospective cost of compliance with appliance energy efficiency standards has been substantially less than forecast by industry, and suggested analyzing earlier cost-impact data to derive an appropriate discount for current cost projections. (ACEEE, No. 10 at p. 9; Public Workshop Tr., No. 2EE at p. 65; NRDC, No. 6 at p. 7) In response, Trane commented that although actual future equipment costs may or may not have approached predicted future equipment costs, these changes in costs reflect improvements in manufacturing efficiency and, because they apply to all equipment, do not necessarily result in a change in the marginal cost between equipment. (Public Workshop Tr., No. 2EE at pp. 65–66) Lennox commented on the importance of understanding costs for both standard equipment and custom-built equipment because they have different cost structures. (Lennox, No. 7 at p. 7) Lastly, NWPPC commented that the cost basis for equipment meeting the ASHRAE Standard 90.1–1999 levels should not include retooling costs because manufacturers already have had to retool to manufacture equipment satisfying this level. (Public Workshop Tr., No. 2EE at p. 132)

The Department acknowledges that manufacturing efficiency evolves over time, but notes that earlier trends do not necessarily reflect future trends and that the incremental cost impact is the cost metric for evaluating appliance energy efficiency standards via LCC analysis. Thus, the Department believes that thorough and rigorous manufacturing cost analysis based on actual equipment at all efficiency levels represents the most effective and appropriate way to estimate current and near term incremental manufacturing costs.

After deriving production cost estimates from the reverse engineering analysis, the Department solicited detailed feedback on the cost estimates from specific manufacturers of individual products. The industry feedback resulted in revisions to the reverse engineering production costs of specific components including: Controls equipment, materials (sheet metal, refrigerant), labor, and buildings/capital. For more detail on how the Department developed the manufacturing costs, refer to the engineering analysis section (Chapter 5) of the ANOPR TSD.

Regarding the manufacturer markup, ARI believes that a value of 1.23 is not representative of what industry uses. Specifically, a value of 1.23 does not produce an acceptable financial return on investment, *i.e.*, it underestimates manufacturers' operating expenses and profitability. (ARI, No. 14 at p. 1)

The Department included the following expenses in the determination of the manufacturer markup: Research and development, net profit, general and administrative expenses, warranty expenses, taxes, and sales and marketing. The Department based the value of 1.23 on its analysis of industry corporate financial records and excluded shipping expenses (out-bound) because these expenses were included in the equipment cost. The Department determined research and development expenses by assuming reallocation of engineering budgets from value-engineering and new-feature development to product development and redesign. The incremental cost of the equipment captures additional capital outlays and re-tooling investments. For more detail on how the Department developed the cost model, refer to the Engineering Analysis, section 5.6 of the ANOPR TSD.

c. Cost/Efficiency Curves

Creating the cost/efficiency curves involved a three-step process: Plotting raw data points as cost versus efficiency, normalizing the cost data to go from absolute costs to incremental costs, and using a linear regression analysis using the least-squares fitting technique to determine the empirical equation and corresponding 95 percent confidence interval that best defines the normalized data. This process gives industry average cost/efficiency curves with a predicted range of accuracy.

The Department refers to the manufacturer cost—what the cost model directly provides as output—as the ''absolute cost'' in this section. The Department correlated the absolute costs from the model as a function of each commercial unitary air conditioner's rated EER. Each manufacturer publishes the rated EER of its air conditioners according to ARI specifications. The resulting two curves of absolute cost versus efficiency—one for the ≥65,000 Btu/h to <135,000 Btu/h equipment class and one for the ≥135,000 Btu/h to <240,000 Btu/h equipment class—each has nine data points.

The absolute costs, represented as output by the cost model, are not central to the rulemaking process and DOE does not present them in this document (nor in the TSD) to avoid the possibility of exposing sensitive information about individual manufacturers' equipment. Different manufacturers might have substantially different costs for their equipment at the same efficiency level, but this fact on its own does not provide the required insight. To determine the relationship of incremental cost versus EER for each of the 18 teardown commercial unitary air conditioners, DOE normalized the absolute cost data for every manufacturer. That is, DOE adjusted the costs of every manufacturer's equipment so that the cost of its equipment was zero at the baseline ASHRAE/IESNA Standard 90.1–1999 EER levels (10.1 EER for the ≥65,000 Btu/h to <135,000 Btu/h equipment class and 9.5 EER for the ≥135,000 Btu/h to <240,000 Btu/h equipment class). To do this, DOE first fit an exponential curve to each manufacturer's data points separately. Then, DOE shifted each curve until the incremental cost equaled zero at the baseline efficiency. The Department shifted all data points for a given manufacturer by the same amount as the entire curve, so that the resulting data points represent incremental cost versus EER. The Department then discarded individual manufacturer curve-fits and continued the analysis with the normalized cost data points. The engineering analysis section (Chapter 5) of the ANOPR TSD provides more explanation and details of the normalization process.

After establishing the normalized data points, the Department used a least-squares regression analysis to fit curves to the data and established two cost/efficiency curves—one for each equipment class—that represent the average incremental cost of increasing efficiency above the ASHRAE/IESNA Standard 90.1–1999 levels. The curves do not represent any single manufacturer, nor do they describe any variance among manufacturers. The curves simply represent the industry's cost to increase the efficiency of the equipment.

The Department also produced confidence intervals from the regression analysis which describe the accuracy of the cost/efficiency curves representing the mean value of the industry. The

Department selected a confidence interval of 95 percent to define the probability that the actual industry average is within these bounds. The LCC analysis (*see* section II.F of this ANOPR) uses the cost/efficiency curves and confidence intervals to compute the mean, minimum, and maximum cost cases.

At the time the engineering analysis was conducted, the highest efficiency level available in the equipment's representative capacities was 11.5 EER. Because the engineering analysis relies on reverse engineering of existing equipment, extending the curve beyond 11.5 EER required extrapolation and then verification using design/option analysis. To limit the uncertainty associated with the part of the curve that was extrapolated, the maximum efficiency level that DOE evaluated was 12.0 EER.

Tables II.3 and II.4 show the incremental manufacturer costs and confidence intervals for the systems with cooling capacities of about 7.5 and 15 tons.

TABLE II.3.—THE ≥65,000 BTU/H TO <135,000 BTU/H (7.5-TON) EQUIPMENT CLASS INCREMENTAL COST/EFFICIENCY RELATIONSHIP AND 95 PERCENT CONFIDENCE INTERVAL

EER	Incremental cost	95% Confidence interval [±]
10.1	$0	$0
10.5	47	14
11.0	139	41
11.5	292	85
12.0	543	159

TABLE II.4—THE ≥135,000 BTU/H TO <240,000 BTU/H (15-TON) EQUIPMENT CLASS INCREMENTAL COST/EFFICIENCY RELATIONSHIP AND 95 PERCENT CONFIDENCE INTERVAL

EER	Incremental cost	95% Confidence interval [±]
9.5	$0	$0
10.0	62	35
10.5	165	94
11.0	334	191
11.5	613	351
12.0	1,072	615

For more detail on how the Department developed the industry cost efficiency curves, refer to the engineering analysis, section 5.7 of the ANOPR TSD.

4. Supplemental Design Option Analysis

The Department used the design option approach to validate the accuracy of the cost efficiency curves at efficiency levels between 11.5 and 12.0 EER. As noted earlier, DOE did not evaluate any existing equipment in that EER range during the teardown analysis, so there were no data points available for the curve-fit. Therefore, DOE did not know the level of accuracy of the cost/efficiency curves in this range. The design option analysis simulates equipment with efficiency levels above 11.5 EER to compare their costs with the costs that the extrapolated curve predicts.

The Department received comments from ACEEE and Trane about using the design option approach. The ACEEE recommended using the design option approach because it can consider technologies with limited market share and take into account their cost impact at higher production volumes. (ACEEE, No. 10 at p. 4; Public Workshop Tr., No. 2EE at p. 136) At the Framework Workshop, Trane commented that all design options the Department considered were mature technologies'at least 20 years old'and that the pricing for the options also is mature. Consequently, development of costs for mature technologies should be straightforward. (Public Workshop Tr., No. 2EE at pp. 133–34)

For the equipment simulation, DOE used a combination of modeling tools and techniques. For more detail on the Department's approach to the design option analysis and equipment simulation, refer to the engineering analysis, section 5.8 of the ANOPR TSD. The Department performed the refrigerant-side heat-transfer and balance calculations with a simulation model called the Oak Ridge National Laboratory (ORNL) Heat Pump Design Model using compressor map data from commercially available compressors. A custom heat-exchanger software program provided estimates of the air-side heat transfer and pressure-drops associated with the equipment variations. The Department used a combination of manufacturer data, test data, fan curves, and motor curves to determine fan power and airflow.

To validate the accuracy of the simulations, the Department simulated the performance of the four existing, physically torn down, unitary air conditioners. In addition, DOE had a third-party testing laboratory test and measure the specific performance limits of one of the air conditioners. The Department then used the test data generated from the tests to calibrate the performance model.

After constructing and calibrating the performance model, DOE analyzed various combinations of design options to simulate equipment with increased efficiencies. Then, through discussions with manufacturers and reliance on sound engineering judgment, the Department established guidelines to limit the design option simulations.

The Department requests stakeholder comments regarding its design option analysis. This concern is identified as Issue 4 under ''Issues on Which DOE Seeks Comment'' in section IV.E. of this ANOPR.

5. Alternative Refrigerant Analysis

The ACEEE, ARI, and Lennox noted that the engineering analysis should consider alternative refrigerants because R–22 refrigerant will phaseout in 2010 in compliance with EPA requirements and this will affect equipment component costs. (ACEEE, No. 10 at pp. 9–10; ARI, No. 11 at p. 4; Lennox, No. 7 at p. 1) Both ARI and Lennox stated that significant uncertainty exists concerning what refrigerant will be the likely replacement for R–22 in commercial unitary air conditioner and heat pump equipment, thereby complicating analyses. (ARI, No. 11 at p. 4; Lennox, No. 7 at p. 1) During the October 1, 2001, Framework Workshop, Trane commented that alternative refrigerants can behave differently than R–22 at higher temperatures. (Public Workshop Tr., No. 2EE at p. 160) The ACEEE commented that DOE should base the cost impact of alternative refrigerants on a least-cost strategy incorporating efficiency and refrigerant re-designs in a single design cycle, along with changes in assembly processes. (ACEEE, No. 10 at p. 9)

The Department acknowledges that the phaseout of R–22 will occur shortly after the effective date of any new standards and therefore it is important to consider the impact of new refrigerants on incremental cost/efficiency relationships. In addition, the Department recognizes that it is not certain that R–410a will be the ultimate replacement for R–22 in future unitary air conditioner and heat pump equipment. Two refrigerants, R–410a and R–407c, are currently under serious consideration as substitutes for R–22. While R–407c has similar pressure/temperature characteristics as R–22 and thus easily adapts to existing R–22 designs, it is less efficient. By contrast, R–410a operates at higher pressures than R–22, thus requiring redesign of R–22 equipment. However, R–410a offers efficiency benefits relative to R–407c.

During the rulemaking process, the Department contacted manufacturers and the consensus was that R–410a would be the most likely replacement for R–22 in new commercial unitary equipment as the phaseout of R–22 approaches.

Although some unitary air conditioners using R–410a are commercially available, none were available in the ≥65,000 Btu/h to <240,000 Btu/h range when the engineering analysis was conducted. However, since the analysis was conducted, the Department has learned that there is one R–410a commercial unitary air conditioner now available on the market in the 15-ton representative capacity. Most air conditioners that use R–410a are sold primarily for residential applications. Consequently, the Department's analysis compared the design differences between R–22 and R–410a equipment in smaller packaged units (*i.e.*, <65,000 Btu/h units) to gain general engineering insight. In addition, the Department used performance information from manufacturers of R–410a compressors to develop engineering models of the larger R–410a systems.

The Department carried out preliminary performance analyses to simulate R–410a equipment using the same performance models applied to the R–22 equipment, and calculated the R–410a equipment costs using the same cost model applied to the R–22 equipment. The engineering analysis section (Chapter 5) of the ANOPR TSD presents additional details of the R–410a analyses. The Department generated cost/efficiency curves that represented the R–410a equipment using the performance analysis and estimated equipment costs.

The Department realizes that the absolute costs of R–410a equipment differ from those of the R–22 equipment. However, the analysis focuses on the difference in the incremental costs between the two curves. The Department intends to consider the absolute costs of the R–22 phaseout in the manufacturer impact analysis. The alternative refrigerant analysis provided no evidence to suggest that the incremental cost/efficiency behavior of R–410a equipment in the ≥65,000 Btu/h to <135,000 Btu/h and ≥135,000 Btu/h to <240,000 Btu/h equipment classes differs substantially from the R–22 cost/efficiency behavior. For more detail on the alternative refrigerant analysis, refer to the engineering analysis, section 5.9 of the ANOPR TSD.

The Department requests comments from interested parties about its proposed approach to the alternative refrigerant analysis, and has identified it as Issue 2 under ''Issues on Which DOE Seeks Comment'' in section IV.E. of this ANOPR.

D. Building Energy Use and End-Use Load Characterization

Energy savings from commercial unitary air conditioning equipment vary according to the rated efficiency level of the equipment and a number of other factors, including: Climate, building-type, and building occupation schedule and use. Operating cost savings are a result of reduced electricity consumption and a decrease in the peak electric demand charge. The Department conducted building simulations to estimate the energy use of the commercial unitary air conditioning equipment at candidate standard levels for various combinations of the above-mentioned factors. The simulations yielded hourly estimates of the buildings' electric loads that included lighting, plug, and air conditioning equipment. The Department uses these estimates in the life-cycle cost analysis to assess the cost savings that the air conditioning equipment provides at each of the efficiency levels analyzed. For more detail on the building energy use and end-use load characterization analysis, refer to Chapter 6 of the ANOPR TSD.

1. Approach

The 1995 CBECS (CBECS 95) data set was the primary source of the data used to develop the building characteristics. The Department considered the use of the 1999 CBECS (CBECS 99), but the entire microdata set was not available in time for this analysis. In addition, the sampling procedure for CBECS 99 specifically excluded new buildings of less than 10,000 square feet, which is the type of building that uses commercial unitary air conditioners. Using the CBECS 99 data would have resulted in a biased data set. The Department used a subset of the CBECS 95 representative building types to characterize the energy use and loads for this analysis. It selected six building types that included most of the top eight, energy-using building types in the commercial sector based on CBECS data.

The Department did not explicitly include health care buildings. Instead, because of similarities in modeling the outpatient segment of a health care building and an office building, the Department added the outpatient segment of a health care building into the office-building category. However, the Department did not include the inpatient segment of the health care building type, because there are insufficient data to characterize the buildings for the purpose of energy simulations. The Department did not consider the lodging building type because the number of observations nationwide in the CBECS data set was small and because these buildings do not typically use unitary packaged air conditioning equipment for most of their conditioned spaces. For more details on the engineering approach to building energy use, representative building types, modeling methodology, climate and building locations, and annual building energy use, refer to Chapter 6 of the ANOPR TSD.

Lennox provided comments indicating that industrial and light manufacturing applications use a large fraction of unitary equipment, which the DOE omitted from the building sample. (Lennox, No. 15 at p. 1) The CBECS data set excludes manufacturing facilities from its sample. The Manufacturing Energy Consumption Survey (MECS) includes manufacturing facilities, but the detailed data on building characteristics and operation are not available in the MECS data set. The lack of such data, including the square footage cooled by commercial unitary air conditioning equipment, makes it difficult to establish how significant this building category would be in the analysis. The Department believes that, in the case of office space attached to industrial or light manufacturing buildings, its analytical approach provides a reasonable representation of the cooling loads experienced by these building spaces. This issue is also discussed later with regard to the development of electricity prices from utility tariffs for the LCC analysis (*see* section II.F.1.b.(2)(a) of this ANOPR). This concern is identified as Issue 5 under ''Issues on Which DOE Seeks Comment'' in section IV.E of this ANOPR.

The Department further screened the individual CBECS buildings within the six building types to include only buildings with at least 70 percent of their total floor space cooled by unitary packaged equipment. The Department based the 70 percent value on the need to keep the sample size reasonable, yet still representative of the building stock that uses packaged cooling equipment. Using an 80 percent value would be too restrictive and using a 60 percent value would be too extensive and make the sample size too large. The total number of observations in the six building types meeting the 70 percent threshold was 1033. These buildings accounted for over 73 percent of the annual cooling energy use and 67 percent of the square

footage of commercial buildings with at least part of their floor space being cooled with packaged equipment.

The Department modeled each CBECS sample building using the BLAST software. The Department computed the building loads by simulating a prototypical three-story, 48,000-square-foot building with five thermal zones per floor with schedule and envelope characteristics chosen to represent each building sampled. The Department used the ventilation requirements of ASHRAE Standard 62.1–1999 as the basis for the ventilation rates in the building simulations. The Department scaled the results of that prototype's simulation to match the specific geometry of the CBECS building being represented, e.g., conditioned floor area, aspect ratio (defined as the ratio of the length to the width of a building), number of floors, and number of thermal zones per floor. The Department simulated the buildings with equipment at ten different EER levels to determine the annual energy impacts of changes in EER.

Lennox commented that the default part-load performance curve in the BLAST simulation tool appears to be representative of equipment that uses cylinder unloading at part-load, instead of multi-compressor staging that is common in commercial unitary air conditioners. The impact of using the BLAST default part-load performance curve is some overestimation of the energy use of the compressors when lightly loaded. (Lennox, No. 15 at p. 1) Due to the lack of available published data on part-load performance of commercial unitary air conditioners, the Department requests data on the part-load operating characteristics to adjust the BLAST part-load performance curve.

Also, in view of the complexity of the BLAST analysis, and Lennox's comments concerning the selection, characterization, and simulation of the building set used for the building energy use and end-use load characterization analysis (Lennox, No. 15 at p. 1), the Department had an independent third-party expert review its analysis. The results of the third-party review are available to interested parties on the Department's website at *http://www.eere.doe.gov/buildings/appliance_standards/ac_hp.html.* This third-party review is addressed as issue 16 under ''Issues on Which DOE Seeks Comment'' in section IV.E, of this ANOPR.

Also, Lennox provided comments on the ventilation rates used in the DOE building simulation analysis. (Lennox, No. 15 at p. 1) Lennox and ARI asserted that the DOE analysis overstates the ventilation load for most buildings by assuming all commercial buildings typically operate at ASHRAE Standard 62–1989 ventilation levels (15 cfm/person typical). Lennox wrote that most existing building applications as well as half of the new building applications of unitary air conditioning equipment operate at pre-ASHRAE Standard 62–1989 ventilation levels (5 to 7.5 cfm/person typical), which accounts for nearly 85 percent of the total shipments of commercial unitary air conditioning equipment. (Lennox, No. 15 at p. 1; ARI, No. 18 at pp. 1–8) Consultation between the Department and designers suggests that designers use ASHRAE Standard 62.1–1999 for establishing design ventilation rates, particularly since many designers wish to avoid potential litigation arising from adverse health effects attributable to low ventilation rates. (See the discussion of building energy use and end-use load characterization that addresses ventilation rates in section 6.2.5.5, ''Ventilation and Infiltration,'' of the ANOPR TSD.) For commercial unitary air-conditioning equipment, the ventilation rate is typically established by an outside air damper setting on the installed equipment. It is not a function of the age of the building, but rather is set at the time of installation. Concern over the health effects of low ventilation rates are the same regardless of the age of the building or the minimum ventilation rates in effect at the time the building was constructed.

Consequently, the Department believes that the use of ASHRAE Standard 62.1–1999 for setting ventilation requirements is the approach most representative of that used in the construction industry today. The Department is unaware of any field studies that would support use of a different ventilation rate than that required by ASHRAE Standard 62.1–1999, and thus is inclined to use this as the basis for the analysis for the ANOPR. However, in view of the complexity of the analysis and issues concerning ventilation rates that Lennox addresses, the Department had an independent third-party expert review its analysis. The results of the third party review are available to interested parties on the Department's website at *http://www.eere.doe.gov/buildings/appliance_standards/ac_hp.html.* This concern is addressed as Issue 16 under ''Issues on Which DOE Seeks Comment'' in section IV.E. of this ANOPR.

The Department received several comments that expressed concern about whether the higher efficiency equipment provided adequate humidity control while meeting ASHRAE Standard 62.1–1999 ventilation requirements. (ACEEE, No. 10 at p. 5; Public Workshop Tr., No. 2EE at p. 72; Lennox, No. 7 at p. 3; Public Workshop Tr., No. 2EE at p. 71) The Department established maximum sensible heat ratios for equipment analyzed via the design option process in the engineering analysis, indicating that there could be high EER equipment designs that provide acceptable humidity control (or adequate sensible heat ratio performance) under ARI Standard Rating Conditions for cooling.

In addition, DOE received several comments concerning the simulation of economizers. Lennox and the Oregon Office of Energy (OOE) commented that economizer operation or failure to operate is difficult to capture in a building simulation analysis. (Lennox, No. 7 at p. 4; Public Workshop Tr., No. 2EE at p. 163) The Department agrees with Lennox and OOE. However, for this ANOPR analysis, DOE assumed that if CBECS data indicated the use of an economizer then it was a fully functioning economizer. This might result in some underestimation of the actual cooling loads in the buildings.

The Department requests comments from interested parties regarding its proposed approach to economizers. This matter is identified as Issue 6 under ''Issues on Which DOE Seeks Comment'' in section IV.E. of this ANOPR.

Fan power in the energy analysis was raised as one of the issues in the Framework Workshop. A written comment from ACEEE proposed (in addition to the EER requirement) establishing a second requirement for fan power as a function of flow rate in Watts per cubic feet per minute (Watts/cfm) using the existing fan static pressures. (ACEEE, No. 10 at p. 9) The Department notes that the current EER performance metric includes fan power and has incorporated annual fan energy use in its estimate of total system energy use for the simulations. Because DOE is not planning to amend the test procedure at this time to extract the fan power measurement, it does not anticipate adding a requirement for fan efficiency (Watts/cfm).

In a related comment on the fan power issue, Lennox raised the issue of the inclusion of supply fan energy during all operational modes of the air conditioner (cooling, heating, and ventilating) in the energy analysis. (Lennox, No. 15 at p. 1) The Department understands that the supply fan is an integral part of a unitary air conditioner and its operation contributes to the energy use of the equipment. Including supply fan energy during hours when a commercial unitary air conditioner is

operating in the heating or ventilating mode will increase the energy use of that equipment, in comparison to including supply fan energy only when the equipment is providing cooling. For the purposes of the ANOPR analysis, the Department has included all energy from the supply fan and welcomes public comments on this approach. This concern is addressed in Issue 7 under ''Issues on Which DOE Seeks Comment'' in section IV.E of this ANOPR.

Furthermore, in view of the complexity of the analysis concerning fan energy and the issues addressed by Lennox, the Department had an independent third party review its analysis. The results of the third-party review are available to interested parties on the Department's Web site at *http://www.eere.doe.gov/buildings/appliance_standards/ac_hp.html.* Also, this concern is addressed as Issue 16 under ''Issues on Which DOE Seeks Comment'' in section IV.E of this ANOPR.

The end result of the simulation analysis was an hourly end-use energy stream of data for the following end-use categories:

- Cooling package equipment;
- Heating (gas);
- Lights;
- Plug and miscellaneous loads;
- Package-equipment fan;
- Nnon-package cooling; and
- Non-package fan.

2. Preliminary Results

The distribution of cooling energy use intensity (EUI) for all buildings simulated at the 8.9 EER efficiency level shows that EUI varies widely, from 0.33 kBtu/square-foot/year to a maximum of 63.3 kBtu/square-foot/year. However, the vast majority of the buildings fall into the 5 to 20 kBtu/square-foot/year range. Chapter 6 of the ANOPR TSD provides a comparison of the simulated cooling EUI for each building with the calculated cooling EUI using the CBECS estimated cooling energy use. On a square-footage-weighted basis, the BLAST simulation cooling EUIs agree reasonably well with the CBECS estimated EUIs. The CBECS estimated EUIs are higher for two of the building types (Office and Food Service), while the BLAST simulation cooling EUIs are higher for the four remaining building types (Retail, Education, Assembly, Warehouse). The square-footage-weighted cooling EUI for this set of buildings was 10.5 kBtu/square-foot/year for the BLAST simulations compared to 9.6 kBtu/square-foot/year for the CBECS estimates.

The hourly cooling energy use is only one of the energy inputs to the LCC analysis. All the electric energy end-uses play some part in determining which rate structure applies and where end-users are in the rate structure for any given hour. The electric energy use of the cooling equipment relative to the other electric energy use within a building is a strong function of the building type, climate, and time of use (seasonal as well as hourly). The peak hourly energy use becomes particularly important when analyzing the marginal cost of energy saved by higher EER levels.

In the progression to higher EER levels, the simulation runs indicated reduced cooling and fan energy consumption. The Department made a comparison of the change in cooling EUI (not including the fan energy) for two buildings from the representative building set as the equipment efficiency progressed from an EER of 8.5 to 12.0. As expected, the cooling EUI decreases with each incremental EER increase, but with a declining EUI benefit at higher EERs. This trend is the same for all buildings, even though the base EUI is different for each of them. The change in total fan energy use from the simulation as a function of EER is less pronounced. This is because, while the simulation model assumes that fan energy during the EER rating test is reduced, a substantial fraction of the fan energy consumption is a function of the external fan static pressure, which is assumed not to change between efficiency levels. The Department used the hourly simulated building electric-energy loads directly as inputs to the detailed LCC analysis discussed in the next section of this ANOPR. See Chapter 6 of the TSD for more details on this building load simulation analysis.

In determining the reduction in cooling and fan energy consumption due to higher EER levels, the Department did not take into account a rebound effect. The rebound effect occurs when a piece of equipment that is made more efficient is used more intensively, so that the expected energy savings from the efficiency improvement do not fully materialize. Because unitary air conditioners are a commercial appliance, the person owning the equipment (*i.e.*, the building owner) is often not the person operating the equipment (*i.e.*, the renter). Because the operator does not own the equipment, they will not have the information necessary to influence their operation of the equipment. In other words, a rebound effect would appear to be unlikely. The Department seeks comments on whether a rebound effect should be included in the determination of annual energy savings. If a rebound effect should be included, the Department seeks data for basing the calculation of the rebound effect. This matter is identified as Issue 20 under ''Issues on Which DOE Seeks Comment'' in section IV.E. of this ANOPR.

E. Markups To Determine Equipment Price

The Department understands that the price of a commercial unitary air conditioner depends on how the customer purchases such equipment. Because the customer price of such equipment is not generally known, the Department used the manufacturers' costs developed from the engineering analysis and applied multipliers called ''markups'' to arrive at the final equipment price. The derivation of the equipment price depends on the distribution channel the customer uses to purchase the equipment. Typical distribution channels consist of wholesalers, mechanical contractors, and general contractors. The Department based the wholesale and contractor markups on a combination of firm balance sheet data and U.S. Census Bureau data. For each of the markups, DOE further differentiated between a baseline markup and an incremental markup. The Department defines baseline markups as coefficients that relate the manufacturer's price of baseline equipment to the wholesaler's or contractor's sales price of such equipment. Incremental markups are coefficients that relate changes in the manufacturer's price of baseline equipment to changes in the wholesaler's or contractor's sales price. For more detail on equipment prices and markups, refer to Chapter 7 of the ANOPR TSD.

1. Approach

To carry out the LCC calculations, DOE needed to determine the cost to the customer of a baseline commercial unitary air conditioning unit and the cost of more efficient units. The customer price of such units is not generally known. However, by applying a multiplier called a ''markup'' to the manufacturer's prices that DOE derived, DOE could estimate customer prices both for baseline and more-efficient equipment.

Both Lennox and Trane noted the importance of the methodology used to determine markups and equipment prices. Lennox stated that markups are dependent on how commercial equipment is sold and involve complex distribution channels that include distributors (also known as wholesalers), installing contractors, and business or building owners. (Lennox,

No. 2 at p. 3; Public Workshop Tr., No. 2EE at p. 142) Trane also noted that any publicly available price lists are not useful for estimating equipment prices. (Public Workshop Tr., No. 2EE at p. 125) In response to Trane, OOE commented that invoices are available for estimating the installed cost of commercial unitary air conditioners. (Public Workshop Tr., No. 2EE at p. 126)

The Department understands that the equipment price to the customer depends on how the customer purchases the equipment. Based on manufacturer input, DOE defined two types of distribution channels to describe how the equipment passes from manufacturer to customer. In the first distribution channel, the manufacturer sells the equipment to a wholesaler, who in turn sells it to a mechanical contractor, who in turn sells it (and its installation) to a general contractor, who in turn sells it to the customer. In the second distribution channel, the manufacturer sells the equipment directly to the customer through a national account. The Department further subdivided the first distribution channel by mechanical contractor size (as measured in annual revenues). In its methodology for estimating equipment prices, the Department relied solely on the above approach, *i.e.*, defining distribution channels and determining markups at each point in the distribution channel. The Department could not collect any price lists or invoices to assist in its determination of equipment prices. For more detail on the distribution channels for commercial air conditioners, refer to the introduction to Chapter 7, figure 7.1.1, and section 7.7 of the ANOPR TSD.

Based on information provided by equipment manufacturers through informal interviews, as well as the judgment of individuals familiar with how commercial unitary air conditioning equipment is distributed to commercial customers, the Department assumes that end use customers purchase 50 percent of equipment through small mechanical contractors, 32.5 percent through large mechanical contractors, and the remaining 17.5 percent through national accounts. In addition, the Department understands that 30 percent of commercial unitary air conditioning equipment is purchased for the new construction market, while the remaining 70 percent serves the replacement market. In the case of the replacement market, where equipment is purchased through a mechanical contractor, the mechanical contractor generally purchases equipment directly from the wholesaler (*i.e.*, a general contractor is not involved in the distribution of equipment). The mechanical contractor markup is a function of contractor size and whether the contractor serves primarily the new construction or the replacement market. For more detail on the new construction and replacement markets and their effects on the mechanical contractor markups, refer to section 7.4.1 of the ANOPR TSD.

For each of the markups, DOE further differentiated between a baseline markup and an incremental markup. The Department defines baseline markups as coefficients that relate the manufacturer price of baseline equipment to the wholesale or contractor sales price of such equipment. Incremental markups are coefficients that relate changes in the manufacturer price of baseline equipment to changes in the wholesale or contractor sales price. For more detail on the methodology the Department used to determine baseline, incremental, and overall markups, refer to sections 7.1.1 through 7.1.3 of the ANOPR TSD.

The Department based the wholesale and mechanical contractor markups on firm balance sheet data, while it based the general contractor markups on U.S. Census Bureau data for the commercial and institutional building construction industry. The Department obtained balance sheets from the trade associations representing wholesalers and mechanical contractors. The Department put the building construction industry data into the same format as the balance sheet data for wholesalers and mechanical contractors to derive the markups for general contractors. The key assumptions used to estimate markups using this financial data are:

- The firm balance sheets faithfully represent the various average costs incurred by firms distributing and installing commercial air conditioning.
- There are two categories of costs: (1) Costs that vary in proportion to the manufacturer price of commercial air conditioners (variable costs); and (2) costs that do not vary with the manufacturer price of commercial air conditioners (fixed costs).
- Commercial air conditioner wholesale and contractor prices across different efficiency levels vary in proportion to commercial air conditioner wholesaler and contractor costs included in the balance sheets.

For more detail on the basic assumptions the Department used to estimate markups, wholesale markups, and mechanical contractor markups, refer to sections 7.2 through 7.5 of the ANOPR TSD.

Commercial unitary air conditioning equipment purchased through national accounts is an exception to the usual distribution of HVAC equipment to end users. Large customers of HVAC equipment, such as national retail chains, use national accounts to circumvent the typical chain of distribution. Due to the large volume of equipment purchased, large customers can purchase equipment directly from the manufacturer at significantly lower prices than could be obtained through the typical distribution chain.

To derive a national account markup, the Department considered costs that are added to the manufacturer price as additional markups and costs that are subtracted from the customer price as markups that are avoided in a more typical manufacturer-to-wholesaler-to-mechanical-contractor-to-general-contractor-to-customer distribution system. Costs that are added include:

- Freight charges (less-than-a-truck-load rates are higher than trailer-load rates);
- Account management and administration expenses (billing, collections and warranty issues); and
- Cost-of-sale increases (technical support and personalized service).

Costs that are deducted include:

- Wholesaler account management and administration expenses;
- Wholesaler warehousing and handling expenses;
- Mechanical contractor markup on equipment sale (profit, labor warranty, and service reserve);
- Mechanical contractor account management and administration expenses;
- Mechanical contractor warehousing and handling expenses;
- General contractor account management and administration expenses; and
- General contractor project oversight markup.

In view of these additions and deductions, the Department derived a national account markup assuming that the resulting equipment price increase was one-half of that realized from a typical chain of distribution. In other words, if the price increase resulting from the multiplicative product of the wholesale, mechanical contractor, and general contractor markups is $100, the national account markup is such that the price increase is one-half of that, or $50. The Department assumed that the resulting national account markup must fall somewhere between the manufacturer price (*i.e.*, a markup of 1.0) and the customer price under a typical chain of distribution. Because

DOE did not know precise values (between zero and one for the markups) for the actual national account equipment price, DOE used 0.5 to represent a mid-point value between manufacturer price and customer price. For more detail on national account markups, refer to section 7.7 of the ANOPR TSD.

As a final step, DOE applied a sales tax, which represents state and local sales taxes that are applied to the customer price of the equipment. The Department derived sales taxes representative of both state and local sales taxes from 1997 state sales tax data and 1997 local sales tax data. Using state unitary air conditioner shipment data from 1994, DOE weighted the state and local sales tax data by the percentage of unitary air conditioners shipped to each state. The sales tax has a mean value of 6.7 percent. The Department updated its calculation of sales taxes based on 2003 state and local sales tax data from the Sales Tax Clearinghouse (*http://thestc.com/STrates.stm*). Although the updated mean sales tax value is 6.6 percent, virtually unchanged from the value based on 1997 data, the Department intends to update the sales tax data in its analysis for the NOPR. The Department applied sales taxes to the customer equipment price irrespective of the distribution channel and the market in which the customer is located. The Department assumes the state and local sales tax rate is the same for residential products and commercial/industrial equipment.

For more detail on the Department's approach to state and local sales taxes, refer to section 7.6 of the ANOPR TSD. The Department invites comments and data from interested parties on its assumption. Also, the Department was not able to gather more recent state-by-state shipments of >65,000 Btu/h to <240,000 Btu/h commercial unitary air conditioners. The Department requests more recent data from interested parties.

2. Estimated Markups

The Department multiplied the wholesale and contractor markups described above by the sales tax to get the overall baseline and incremental markups shown in Tables II.5 and II.6, respectively. Overall markups are based on one of three assumed distribution channels as well as whether the commercial unitary air conditioning equipment is purchased for the new construction or the replacement market. The Department based the distribution channel on whether such equipment is purchased through small mechanical contractors, large mechanical contractors, or national accounts. The tables show a weighted-average overall markup, assuming that: (1) The new construction and replacement markets represent 30 percent and 70 percent of the market, respectively; and (2) end-use customers purchase 50 percent of equipment through small mechanical contractors, 32.5 percent through large mechanical contractors, and the remaining 17.5 percent through national accounts. The weighted-average overall baseline markup equals 2.31, while the weighted-average overall incremental markup equals 1.56. For more details on how the Department derived overall markups, refer to section 7.8 of the ANOPR TSD.

The Department used the overall markup to estimate the customer price of baseline equipment, using the manufacturer price of baseline equipment. For example, if the manufacturer price of a baseline commercial air conditioner is $100, DOE multiplied this by the weighted-average overall baseline markup to estimate the baseline customer price of the equipment as $231. Similarly, DOE used the overall incremental markup to estimate changes in the customer price, in view of changes in the manufacturer price above the baseline price resulting from a standard to raise equipment efficiency. For example, if a standard increases the commercial air conditioner manufacturer price by $25, DOE multiplied this by the weighted-average overall incremental markup to estimate that the customer price will increase by $39.

TABLE II.5.—OVERALL BASELINE MARKUPS

Market sector	New construction			Replacement			Weighted-average
	Small mech.	Large mech.	National account	Small mech.	Large mech.	National account	
Wholesale	1.36	1.36	.....	1.36	1.36		
Mechanical Contractor	1.48	1.35	1.69	1.70	1.55	1.60	
General Contractor	1.24	1.24	.....	NA	NA		
Sales Tax	1.07	1.07	1.07	1.07	1.07	1.07	
Overall	2.66	2.42	1.80	2.47	2.24	1.71	2.31

TABLE II.6.—OVERALL INCREMENTAL MARKUPS

Market sector	New construction			Replacement			Weighted-average
	Small mech.	Large mech.	National account	Small mech.	Large mech.	National account	
Wholesale	1.11	1.11	.....	1.11	1.11		
Mechanical Contractor	1.26	1.18	1.27	1.37	1.29	1.24	
General Contractor	1.13	1.13	.....	NA	NA		
Sales Tax	1.07	1.07	1.07	1.07	1.07	1.07	
Overall	1.68	1.59	1.35	1.63	1.53	1.32	1.56

Referring specifically to the above wholesaler baseline and incremental markups of 1.36 and 1.11, respectively, ARI's comments reject the assumption that incremental markups should be less than baseline markups. ARI states that these correspond to margins of 27 percent and 9 percent respectively, and that the underlying assumption is that ''the wholesaler will accept one-third the margin on the incremental cost that he receives on the baseline.'' (ARI, No. 14 at pp. 1 and 2) According to ARI, this is saying that the wholesaler is expected to sell premium goods for a lower

markup than commodity goods, which is counter to the trends in all industries. Also, ARI states that ''premium goods demand premium markups.'' By using incremental markups, the effect of any increase in the standard would be to decrease the profit margins of the wholesalers and all others in the distribution chain. Further, ARI states that, over a period of time, ''this is a sure formula for bankruptcy and collapse of an industry.'' (ARI, No. 14 at p. 1)

As ARI notes, the wholesale incremental markups are one-third of the wholesale baseline markups. (ARI, No. 14 at p. 1) However, the Department does not agree with ARI's characterization of these estimates as counter to industry trends and ''a formula for bankruptcy.'' Rather, the Department believes that the above incremental markups are consistent with industry trends and sufficient to maintain industry profits. There appears to be some fundamental disagreement between ARI and the Department on whether growth in cost of goods sold (CGS) must always be matched by a proportionate growth in sales revenue. While this may be true within the context of a general business expansion, the Department believes that it is not an appropriate assumption within the context of an increase in equipment price due to an increase in the minimum efficiency standard. To develop markups, energy efficiency standards involve little or no change in the number of units sold or in the labor needed to handle those units. This situation is quite different from a market trend where both the number of units sold and CGS increase. The following example illustrates this case.

The Department uses a simple hypothetical example of a firm setting prices before and after implementation of an efficiency standard (see Table II.7). For illustration, the hypothetical standard is assumed to raise equipment cost by 25 percent, from $5 million CGS in the Baseline to $6.25 million CGS with the New Standard. For simplicity, the number of units sold in this example is assumed to remain constant. The DOE analyses of national energy savings and manufacturer impact takes into account changes in sales as a result of energy efficiency standards. Consequently, with the New Standards, labor and occupancy costs remain constant and other overhead costs and profit are assumed to rise in proportion to changes in CGS.

TABLE II.7.—EXAMPLE ILLUSTRATING IMPACT OF PROFIT ON MARKUP

Baseline		New standard (proportional profit)		New standard (fixed markup)	
Total CGS ($thousand)	$5,000	Total CGS ($thousand)	$6,250	Total CGS ($thousand)	$6,250
Labor and Occupancy ($thousand)	$659	Labor and Occupancy ($thousand).	$659	Labor and Occupancy ($thousand).	$659
Other Overhead ($thousand)	$659	Other Overhead ($thousand)	$824	Other Overhead ($thousand)	$824
Profit ($thousand)	$333	Profit ($thousand)	$416	Profit ($thousand)	$580
Total Revenue ($thousand)	$6,650	Total Revenue ($thousand)	$8,150	Total Revenue ($thousand)	$8,313
Markup	1.33	Markup	1.30	Markup	1.33

The New Standard (proportional profit) shown in the middle column of Table II.7 illustrates what would happen if the Department assumes profits are proportional to CGS. Even though baseline profit rises from $333,000 to $416,000, the apparent markup declines, compared to Baseline. The apparent decline is the result of an arithmetic change in the ratio of Total Revenue to Total CGS. In other words, if profitability increases proportionally with CGS from $333,000 to $416,000, then the markup declines from 1.33 to 1.30.

The New Standards (fixed markup) case illustrates the implications if instead the Department were to assume a fixed markup. The results (right column in Table II.7) show that if the markup is fixed at the pre-standard level of 1.33, then firm profits will rise after the standard becomes effective. In other words, with a fixed markup, revenue after the standard becomes effective would be 1.33 multiplied by the CGS, or $8,313,000. The profit that is consistent with this amount is the revenue minus the sum of CGS, labor and occupancy, and other overhead. This provides a profit of $580,000 after the standard, or a 74 percent increase in profit.

The Department does not believe that it is possible for firms to increase profits in this manner simply as a result of an increase in equipment efficiency. In a competitive market, DOE believes increases in profits do not persist because high profits attract competing firms which results in an increase in equipment supply and lower prices. The Department believes that a firm that used an efficiency standard as an opportunity to increase profits would eventually lose market share to firms that maintain profitability nearer to the pre-standard levels.

All this indicates that markups on goods sold after an energy efficiency standard becomes effective would be lower than the baseline markups. Thus, the Department believes that, due to implementation of an energy efficiency standard, CGS would increase but the number of units sold and associated labor costs would not increase.

Two sources of industry data support the Department's finding concerning incremental markups. First, the incremental markup the Department calculated is consistent with incremental markups calculated from a statistical analysis of U.S. Census Bureau data covering the HVAC sector. (See Wholesalers: U.S. Census Bureau, Gross Profit, Employment and Gross Margin for Merchant Wholesalers for NAICS 42173. By State: 1997. Refer to section 7.3 of the ANOPR TSD for details on the derivation of incremental markups based on the use of U.S. Census Bureau data.) Second, there are empirical observations of instances where industry growth in revenue exceeds growth in profits. For example, net sales of firms in the refrigeration and service industry grew at 18.6 percent over a period of five years while operating income grew by 12.6 percent. (See Ibbotson: 2001 Cost of Capital Yearbook. Statistics for SIC Code 358. Medium firm growth rates.) The Department concludes that many factors influence the relationship between CGS and operating profits.

The Department believes that the use of incremental markups is the most appropriate methodology for developing equipment prices for more energy efficient equipment. Because fewer

expenses need to be covered by an incremental markup, it has a lower value than its corresponding baseline markup. Nevertheless, the Department understands that identifying expenses that need to be covered by the incremental markup is essential to deriving its value. Therefore, the Department seeks comments on whether the wholesale, general contractor, and mechanical contractor incremental markups should cover more or fewer expenses. This is addressed as Issue 8 under ''Issues on Which DOE Seeks Comment'' in section IV.E of this ANOPR.

In addition, in view of the complexity of the analysis and issues addressed by ARI concerning markups (ARI, No. 14 at pp. 1 and 2), the Department had an independent third-party expert review and comment on its analysis. The results of the third-party review are available to interested parties on the Department's Web site at *http://www.eere.doe.gov/buildings/appliance_standards/ac_hp.html.* This subject is addressed as Issue 16 under ''Issues on Which DOE Seeks Comment'' in section IV.E of this ANOPR.

Concerning the Department's characterization of distribution channels, ARI states that replacement installations often need a general contractor. (ARI, No. 14 at pp. 1 and 2) Specifically, ARI states that replacements are divided between those due to equipment failures and those required as part of a major building renovation. In the latter case, ARI states that a general contractor is almost always involved and estimates that 50 percent of the replacement market includes a general contractor markup. (ARI, No. 14 at pp. 1 and 2)

As noted earlier, the Department developed the distribution channels based on data collected from manufacturers as well as the judgment of individuals familiar with how air conditioning equipment is distributed to commercial customers. Based on ARI's input, and any future comments from other interested parties in response to this ANOPR, the Department may change the distribution channels for the NOPR to be more reflective of how equipment is actually distributed.

For equipment purchased through national accounts, ARI states that general and mechanical contractors remain involved in the distribution and installation of the equipment. However, it adds that the contractors may use a slightly lower effective markup if they do not have to cover expenses associated with the cost of the equipment. Thus, national accounts are more similar to a typical distribution channel than not. ARI comments that the principal advantage of a national account to a manufacturer is volume reduction of incremental selling cost. The result is that some savings are shared with the customer in the form of reduced cost for the installed equipment. Although there are customer savings, ARI states that the large difference between baseline and incremental markups is not representative of actual market dynamics, and that national account markups should be 0.2 to 0.25 greater than the values shown in chart 13. (ARI, No. 14 at pp. 1 and 2) The Department understands that ARI is referring to chart 13 (Image 14) in the ''Life Cycle Cost Analysis Presentation: Inputs and Results,'' on the DOE Web site at *http://www.eere.doe.gov/buildings/appliance_standards/ac_hp.html.* In this case, chart 13 (Image 14) presents the same information as Tables II.5 and II.6 in this ANOPR.

As noted earlier, the Department derived a national account markup under the assumption that the resulting equipment price increase was one-half of that realized from a typical chain of distribution. In view of ARI's comments, and any future comments received from other interested parties in response to this ANOPR, the Department may change the national account markups for the NOPR to better reflect the actual distribution of commercial unitary air conditioning equipment.

The ACEEE and ASE commented that DOE should extrapolate future equipment prices from historical producer price trends for commercial unitary air conditioners published by the U.S. Census Bureau. (ACEEE, No. 10 at pp. 9 and 10; ASE, No. 9 at p. 4)

For other rulemakings, the Department used production input costs and production technologies based on the best information available at the time. The Department has not made any assumptions about productivity improvements and material cost changes over time. The Department believes historical price trends for commercial unitary air conditioners (or other related equipment) do not apply to forecast equipment prices where there are no data to show that the trends will continue. Therefore, without specific data on the likely costs to manufacture a piece of equipment, the Department does not plan to apply a productivity improvement factor in this rulemaking.

F. Life-Cycle Cost and Payback Period Analysis

The LCC and PBP analysis determines the impact of potential standards on consumers. The effects of standards on individual commercial consumers include changes in operating expenses (usually lower) and changes in total installed cost (usually higher). The Department analyzed the net effect of these changes by calculating the changes in LCCs compared to a base case. The LCC calculation considers total installed cost (equipment purchase price plus installation cost), operating expenses (energy, repair, and maintenance costs), equipment lifetime, and discount rate. The Department performed the LCC analysis from the perspective of the user of commercial unitary air conditioning equipment.

The Department also determined the economic impact of potential standards on consumers by calculating the PBP of potential standards relative to a base case. The PBP measures the amount of time it takes the commercial consumer to recover the assumed higher purchase expense of more-energy-efficient equipment through lowering operating costs. Similar to the LCC, the PBP is based on the total installed cost and the operating expenses. But unlike the LCC, only the first year's operating expenses are considered in the calculation of the PBP. Because the PBP does not take into account changes in operating expense over time or the time value of money, it is also referred to as a ''simple'' payback period. For more detail on the life-cycle cost and payback period analysis, refer to Chapter 8 of the ANOPR TSD.

The Department generated LCC and PBP results as probability distributions using a simulation based on Monte Carlo statistical analysis methods, in which inputs to the analysis consist of probability distributions rather than single-point values. As a result, the Monte Carlo analysis produces a range of LCC and PBP results. A distinct advantage of this type of approach is that the Department can identify the percentage of users achieving LCC savings or attaining certain PBP values due to an increased efficiency standard, in addition to the average LCC savings or average PBP for that standard. Because DOE conducted the analysis in this way, it can express the uncertainties associated with the various input variables as probability distributions. During the post-ANOPR consumer analysis, the Department may evaluate additional parameters and prepare a comprehensive assessment of the impacts on sub-groups of users.

Lennox and NRDC had some general concerns regarding the LCC analysis. Lennox commented that the technical analysis of the commercial air conditioner market, building loads, and equipment operation are much more

complex than past analyses conducted for residential central air conditioners. (Lennox, No. 7 at p. 1) The NRDC stated that the analysis must be credible and transparent. (NRDC, No. 6 at p. 3)

To make the analysis transparent, the Department developed a spreadsheet model in Microsoft Excel. An add-on to Microsoft Excel called Crystal Ball (a commercially available software program) allows a user to characterize input variables with probability distributions. Past LCC analyses conducted for residential central air conditioners also used Microsoft Excel spreadsheets with Crystal Ball. Although the residential and commercial air conditioner analyses are similar in this respect, the commercial analysis is more complicated in that it requires conducting whole-building simulations to derive equipment energy use and demand.

In addition, the Department derived two sets of electricity prices to estimate annual energy expenses: A tariff-based estimate and an hourly based estimate. The tariff-based approach estimates an annual energy expense using electricity prices determined from electric utility tariffs collected in the year 2002. The hourly based approach estimates annual energy expense using electricity prices that may exist, assuming all electricity markets are deregulated. Under this approach, the Department collected electricity production prices that vary on an hourly basis and used them to model a scenario in which customers are directly charged for the costs incurred by an electricity provider to supply energy for air conditioning. For electricity markets that are already deregulated, the Department collected actual wholesale hourly electricity prices. For markets that are still regulated, it collected hourly system load and generation cost data and used them as a proxy for wholesale prices that might exist if those markets were deregulated.

1. Inputs to LCC Analysis

For each efficiency level analyzed, the LCC analysis requires input data for the total installed cost of the equipment and the operating cost. Table II.8 summarizes the inputs used to calculate the customer economic impacts of various energy efficiency levels. A more detailed discussion of the inputs follows.

TABLE II.8. SUMMARY OF INPUTS USED IN THE LCC ANALYSIS

Input	Description
Equipment Price	Derived by multiplying manufacturer cost by manufacturer, distributor, mechanical contractor, and general contractor markups and sales tax. Manufacturer costs and markup discussed in section II.C. and summarized in Tables II.3 and II.4. Other markups and sales tax discussed in section II.E and summarized in Tables II.5 and II.6.
Installation Cost	≥65,000 Btu/h to <135,000 Btu/h—$1585; ≥135,000 Btu/h to <240,000 Btu/h—$2142. Installation costs vary as a function of equipment weight.
Annual Energy Use and Demand	Derived through whole-building energy use simulations. Discussed in section II.D.
Annual Energy Expenses	Derived from tariff-based and hourly based electricity prices. Average marginal tariff-based electricity price—10.0¢ per kilowatt/hour (kWh). Average marginal hourly based electricity price—9.9¢/kWh.
Repair Costs	≥65,000 Btu/h to <135,000 Btu/h annual repair cost—$151; ≥135,000 Btu/h and <240,000 Btu/h annual repair cost—$279. Annual repair costs vary as a function of manufacturer price.
Maintenance Costs	Annual maintenance cost equals $200; does not vary as a function of cooling capacity or efficiency.
Lifetime	Mean lifetime equals 15.4 years.
Discount Rate	Mean discount rate equals 6.1 percent.
Effective Date*	2008.

* Refer to section II.F.1.b.(8).

As noted by its absence in Table II.8, the Department chose not to include the impact of income taxes in the LCC analysis for this ANOPR. The Department understands that there are two ways in which taxes affect the net impacts attributed to purchasing more energy efficient equipment compared to baseline equipment: (1) Energy efficient equipment typically costs more to purchase than baseline equipment, which in turn lowers net income and may lower company taxes; and (2) efficient equipment typically costs less to operate than baseline equipment, which in turn increases net income and may increase company taxes. In general, the Department believes that the net impact of taxes on the LCC analysis depends on firm profitability and expense practices (how firms expense the purchase cost of equipment). For more detail on the inputs to the life-cycle cost analysis, refer to section 8.2 of the ANOPR TSD. The Department seeks input on whether income tax effects are significant enough to warrant inclusion in the LCC analysis for the NOPR. The Department specifically requests information on how many firms that purchase commercial unitary air conditioners actually pay taxes and, if they do, what expense-accounting practices they use to depreciate the purchase costs. This is addressed as Issue 17 under ''Issues on Which DOE Seeks Comment'' in section IV.E of this ANOPR.

a. Total Installed Cost Inputs

The total installed cost is the sum of the equipment price and the installation cost. The equipment price includes the distribution markups (as determined in section II.E) that are applied to the manufacturer costs estimated in the engineering analysis (section II.C).

The Department derived installation costs for commercial air conditioners from data in *RS Means Mechanical Cost Data, 2002.* The Department decided that data for 7.5-ton and 15-ton rooftop air conditioners are representative of installation costs for the ≥65,000 Btu/h to <135,000 Btu/h and ≥135,000 Btu/h to <240,000 Btu/h air conditioning equipment classes, respectively. The Department derived nationally representative installation costs of $1,585 and $2,142 for 7.5-ton and 15-ton commercial unitary air conditioners, respectively. Because labor rates vary significantly in each region of the country, DOE used data from *RS Means Mechanical Cost Data, 2002* to identify how installation costs vary from state to state and incorporated these costs into the analysis.

Lennox, Trane, and ARI stated that installation costs will increase with efficiency because of the increased

weight and size of more efficient equipment. (Lennox, No. 7 at p. 3; Public Workshop Tr., No. 2EE at p. 146–148; ARI, No. 14 at p. 2 and No. 17 at p. 2) Lennox added that installation costs for the replacement market would increase substantially if larger and heavier equipment requires new roof mounting frames or structural modifications. (Lennox, No. 7 at p. 3) Regarding replacements, ARI stated that most of the equipment being replaced is likely to be older and rated 8.0 EER or lower. The ARI stated that the more efficient equipment will be larger and heavier, and is likely to need an adapter curb or rebooting and perhaps structural modifications to carry the weight. Retrofit installations use adapter curbs. An adapter curb consists of structural members that provide a transition or alignment between existing roof curbs and new equipment with a different size or configuration. Also, ARI stated that the cost of adaptation may be significantly greater if parapets must be increased (to meet building codes) to hide a unit sitting on a tall adapter. The ARI provided rough estimates of $2500 for a 7.5-ton adapter curb and $3500 for a 15-ton adapter curb (parts and labor included). (ARI, No. 14 at p. 2)

The Department could not find data that explicitly showed how installation costs vary with equipment efficiency. As a result, the Department considered varying installation costs in direct proportion to the weight of the equipment. The Department developed linear relationships of operating weight as a function of equipment efficiency for 7.5-ton and 15-ton commercial unitary air conditioners and assumed the installation cost increased in the same proportion. The Department does not believe the weight increases are great enough to warrant structural modifications and so it has excluded the cost of adaptor curbs and increased parapets. Therefore, DOE did not develop a separate set of installation costs for the replacement market. Spreadsheets used in evaluating the LCC and PBP can also be used to evaluate LCC and PBP based on a constant installation cost.

The Department will review the engineering analysis data for the NOPR to determine when manufacturers increase box size and in what direction (height, footprint, or both). Based on that review, the Department will determine whether the current installation cost analysis captures all the associated costs of installing more efficient equipment. The Department did not include in the analysis the incremental cost of replacing older equipment (*i.e.*, equipment rated 8.0 EER or lower). This is because the analysis establishes the incremental cost of installations exceeding the baseline efficiency levels (*i.e.*, the ASHRAE/IESNA 90.1–1999 efficiency levels of 10.1 EER for the ≥65,000 Btu/h to <135,000 Btu/h equipment class, and 9.5 EER for the ≥135,000 Btu/h to <240,000 Btu/h class), not the cost of upgrading older equipment to baseline EER levels. Therefore, if baseline equipment requires adaptor curbs or increased parapets to replace older equipment, but upgrading baseline equipment to more efficient equipment does not need further curb adaption or parapet increases, then the analysis would not include the costs of adaptor curbs or increased parapets. For more detail on the total installed cost inputs, refer to section 8.2.2 of the ANOPR TSD.

b. Operating Cost Inputs

The operating costs consist of a series of discounted cash flows that capture the cost of the electricity needed to operate the equipment, the repair costs, and the maintenance costs over the lifetime of the equipment beginning at the effective date of the standard. The Department calculated the annual electricity expense from the energy use data supplied by the whole-building simulations and electricity prices. As discussed above, the Department used two approaches to estimate electricity prices: A tariff-based approach and an hourly based approach. Because data were not available to indicate how repair costs (*i.e.*, those costs associated with the repair or replacement of failed components) vary with equipment efficiency, the Department assumed that repair costs vary directly with the cost of the equipment. Because equipment costs increase with efficiency and, to a large extent, equipment replacement costs drive repair costs, the Department reasonably assumes that repair costs will vary directly with the cost of the equipment. On the other hand, the Department assumed that maintenance costs remain constant regardless of equipment cost. Because maintenance costs correspond to the upkeep of equipment operation (*e.g.*, cleaning heat-exchanger coils and recharging refrigerant) and are not associated with repair or replacement of system components, the Department reasonably assumed that maintenance costs are not part of the cost of the equipment and, therefore, will not vary with the equipment cost. Also, the Department used a survival function to define the probable lifetime of the equipment with the mean being 15.4 years. For the analyses conducted for this ANOPR, the Department assumed that an energy efficiency standard for commercial unitary air conditioning equipment would become effective in 2008. (42 U.S.C. 6313(a)(6)(C)) For more detail on operating cost inputs to the life-cycle cost analysis, refer to section 8.2.3 of the ANOPR TSD.

(1) Use of Whole-Building Simulations

As discussed in the building energy use and end-use load characterization analysis (section II.C of this ANOPR), the whole-building simulation analysis generates building energy consumption data for each hour of a typical meteorological year. For each of the 1,033 records in the building sample, DOE disaggregated the hourly whole-building energy consumption into the air conditioning energy consumption (*i.e.*, the consumption due to the compressor and condenser fan), the supply or ventilation fan energy consumption, and the energy consumption due to all other electric end-uses in the building. Since the supply fan is integral to commercial unitary air conditioning equipment, DOE included energy consumption for ventilation even during periods where mechanical cooling is not required for space-conditioning (*i.e.*, when the compressor is not operating).

(2) Electricity Price Analysis

The electric power industry is currently in a state of transition between two different business models, from regulated monopoly utilities providing bundled service to all customers in their service area, to a system of deregulated independent suppliers who compete for customers. While it is unclear when this transition will be finished, it is possible that in the future customers will see a very different pricing structure for electricity. To account for the impacts of this change on the LCC, DOE used two different electricity price models in this analysis. The first analysis uses information on utility tariffs for commercial customers collected in 2002. The Department based the second analysis on electricity production prices that vary on an hourly basis and used them to model a scenario in which customers are directly charged for the costs incurred by an electricity provider to supply energy for air conditioning. The Department refers to the two analyses as tariff-based and hourly based, respectively.

To account for the wide regional variation in electricity usage patterns, wholesale costs, and retail rates across the country, the Department divided the continental U.S. into 17 subdivisions. The breakdown started with the nine census divisions, which were further

subdivided to take into account significant climate variation and the existence of different electricity market or grid structures. The Department based climate divisions on the nine climate regions defined for the continental U.S. by the National Climatic Data Center. It separated out Texas, Florida, New York, and California because their electric grids operate independently. Finally, it assigned each record from the 1,033 building sample to one of the 17 subdivisions. Both the tariff-based and hourly based approaches used the complete set of 1033 buildings to develop electricity prices.

(a) Tariff-Based Approach

The tariff-based analysis uses tariffs for commercial customers collected for a sample of 90 utilities across the country. The Department used three main criteria in developing the utility sample: (1) The sample of utilities should reflect the distribution of population across the country, with more utilities drawn from more populated areas; (2) the sample should reflect the proportion of customers served by privately owned utilities (investor-owned utilities (IOUs) and power marketers) versus publicly owned utilities (municipals, cooperatives, State, and Federal); and (3) the sample should cover as many customers as possible. The Department used data from DOE's Energy Information Administration (EIA) Form 861 filings for the year 2000 to determine the number of customers served by utilities of different types. The Department determined the representativeness of the sample by the percentage of the total number of commercial and industrial (C&I) customers who were covered. The sampled utilities serve 60 percent of the C&I customers of private utilities, and 14.4 percent of C&I customers for public utilities. The combined total for the U.S. is 48.5 percent of all C&I customers. For more detail on the tariff-based approach, refer to subsection 8.2.3.1 of the ANOPR TSD.

Pacific Gas and Electric (PG&E), ACEEE, NRDC, OOE, and NWPPC stated that electricity prices should reflect actual rates faced by customers. (Public Workshop Tr., No. 2EE at p. 202; ACEEE, No. 10 at p. 4; NRDC, No. 6 at pp. 4–5; Public Workshop Tr., No. 2EE at pp. 197 and 210; Public Workshop Tr., No. 2EE at p. 195) All but PG&E commented that electricity rates used in the LCC analysis must reflect demand or peak load pricing as well as time-of-use (TOU) or time-of-day (TOD) pricing. (ACEEE, No. 10 at p. 4; NRDC, No. 6 at pp. 4–5; Public Workshop Tr., No. 2EE at pp. 197 and 210; Public Workshop Tr., No. 2EE at p. 195) The OOE also stated that electricity prices should be based on marginal rates. (Public Workshop Tr., No. 2EE at pp. 194 and 195) Counter to the above comments, Southern Company stated that pricing strategies will be much more simple in a deregulated electricity market, so [DOE] should not consider real-time or TOU pricing in the analysis. (Public Workshop Tr., No. 2EE at p. 194)

The Department collected tariff documents for the 90 utilities in the sample to establish the actual electricity prices paid by commercial air conditioner customers. The tariff documents encompassed a variety of pricing strategies, including TOU rates. Because the Department did not want to speculate whether TOU rates would exist in a partially or fully deregulated market, DOE kept TOU rates in the tariff-based analysis. As will be described below, based on the electricity prices described in the tariffs, marginal pricing is the basis for establishing electricity expenses in the LCC analysis. For most of the utilities in the sample, the Department collected tariff documents directly from their web sites. When web documents were not available, the Department contacted the utilities directly. An archive of the tariff documents is available at: *http://eetd.lbl.gov/ea/ees/tariffs/index.php*. The tariff documents reflect actual rates that customers pay for electricity.

Utility companies have many tariffs separated into residential, non-residential, and special-use, such as public street-lighting or agricultural uses. Typically, a specific tariff is assigned to a particular customer based on that customer's annual peak demand. Following common utility practice, in the tariff analysis the Department combined commercial and industrial customers into one category. The Department's sampling strategy was to take the default tariff for each customer type, including TOU tariffs where appropriate. The Department assigned every building in the 1033 building simulation sample to one of the 17 subdivisions, and treated each building as a single customer. To increase the sample size and avoid bias in the electricity bill calculations, the Department assigned each customer to each utility in its subdivision. In other words, if the Department assigns six utilities to a particular subdivision, it then assigns the default tariff from each of the six utilities to each customer residing in that subdivision. Then the Department calculates an electric utility bill from each tariff assigned to the customer (the calculation of customer bills is explained below). Because the Department assigned, on average, almost six utilities to each of the 17 subdivisions, the above customer assignment method enabled the Department to effectively expand its building sample from 1033 to 6178 buildings. The particular tariff assigned to each customer was based on the annual peak demand for the base case EER level. The Department kept the customer on the same tariff for all standard levels.

For each of the 1033 buildings simulated, the Department processed the hourly simulation data for each standard level to compute the peak demand and total energy consumption for the 12 calendar months. For buildings assigned to TOU tariffs, DOE re-processed the hourly data to compute the peak demand and total energy consumption for the 12 calendar months during the peak, off-peak, and shoulder hours as defined by the utility. The Department entered into a bill-calculating spreadsheet tool that estimated the total customer bill in each month. The Department repeated the calculation for each standard level and then totaled the monthly bills to arrive at an annual electricity bill. The difference between the annual bills for each standard level gave the associated operating cost savings. To compute the base case air conditioning expense, DOE took the annual bill and multiplied it by the ratio of the total air conditioning energy use to the total building electricity use. It calculated customer marginal prices as the net change in the total bill divided by the net change in energy consumption between two standard levels. The Department implemented a version of the ''Bill Calculator'' in a spreadsheet that includes customer data for a set of representative buildings. Interested parties can get the Bill Calculator spreadsheet at *http://eetd.lbl.gov/ea/ees/tariffs/index.php*.

Lennox commented that the energy analysis does not include the effect of units operating on industrial tariffs. In particular, Lennox stated that: (1) The building set analyzed is a subset of the CBECS data set for commercial buildings; (2) the exclusion of manufacturing sites excludes 30 percent of the electricity used for cooling; and (3) the average rate for electricity in buildings specified in the MECS is 40 percent less than in CBECS buildings. As a result, Lennox commented that the energy analysis overstates the cost of energy consumption by 10 to 15 percent and has the effect of biasing the life-cycle cost and payback period analyses

so that higher efficiency levels would look more favorable to customers. (Lennox, No. 15 at p. 1)

Overall, while the Department agrees that the analysis would be improved by explicitly considering industrial buildings, it does not believe that this will result in a meaningful change to the LCC results.

First, the tariff data collection and analysis do, in fact, include the effect of units operating on industrial tariffs. Through its research, DOE found that utilities typically do not distinguish between commercial and industrial customers in their tariffs. Instead, utilities assign customers General Service tariffs where customer classes are based on annual peak load. The Department's analysis for this ANOPR included only tariffs for customers taking electrical service at secondary voltage, which represents the largest non-residential customer sub-class. The Department understands that utilities could charge different rates to customers taking service at primary voltage and plans to expand its database to include them, although only about 10 percent of utility customers are on primary voltage tariffs.

Concerning the issue of industrial electricity rates, Lennox cited EIA data on estimates of U.S. electric utility average revenue per kWh as the basis for its statement that the average electricity rate for industrial/manufacturing buildings is 40 percent less than that for commercial buildings. (Lennox, No. 15 at p. 1) The Department's analysis for this ANOPR confirms the Lennox observations and shows that the average revenues per kWh for the commercial and industrial categories are 7.4 cents/kWh and 4.6 cents/kWh, respectively. However, because of ambiguities in the definition of customer type and the weighting of customer electricity bills, the Department believes that 4.6 cents/kWh cannot be a proxy for the marginal price charged to customers in industrial buildings. For example, EIA calculates average electricity rates by dividing total electricity revenues by total sales, which is equivalent to assigning equal weight to each kWh sold and giving much greater weight to large consumers. Since most consumers in the Department's analysis are relatively small, DOE believes that EIA's weighting greatly exaggerates the effect of any difference in the per-kWh average price paid by industrial and commercial customers. Also, the Department believes that the average electricity rate is not appropriate for an LCC analysis because energy savings are priced at marginal rates that are heavily dependent on both the building load and the marginal load for a particular end use. The Department's analysis, as detailed in the LCC section (Chapter 8) of the ANOPR TSD, found no clear dependence of the marginal price on the size of the customer. As a result, the Department sees no reason that customers with large peak loads will automatically see significantly lower marginal prices.

Lennox commented that excluding manufacturing sites from the DOE analysis excludes 30 percent of the energy used for cooling. (Lennox, No. 15 at p. 1) According to Manufacturing Energy Consumption Survey (MECS) of 1998, the industrial contribution to the total of commercial and industrial buildings facility heating, ventilating, and air conditioning energy use is about 30 percent. It is likely that manufacturers ship a much smaller percentage of the commercial unitary air conditioning equipment within the scope of this rulemaking to industrial buildings because, on average, industrial buildings are larger than commercial buildings and there is some correlation between building size and equipment size. Therefore, it is not expected that industrial buildings will use a large fraction of unitary air conditioners in the >65,000 Btu/h to <240,000 Btu/h range for their air conditioning needs.

Section II.D.1 addresses the impact of industrial/manufacturing facilities on the Department's analysis and is addressed as Issue 5 under the list of ''Issues on Which DOE Seeks Comment'' in section IV.E of this ANOPR. Also, in view of the above issues concerning industrial tariffs and their impact on electricity prices, the Department had an independent third-party expert review its analysis for this ANOPR. The results of the third-party review are available to interested parties on the Department's website at *http://www.eere.doe.gov/buildings/appliance_standards/ac_hp.html*. The Department intends to make the results of that review available for public comments concurrently with this ANOPR.

In summary, the Department made approximations that led both to over- and under-estimations of electricity prices. Moreover, the Department believes that the results are uncertain but not biased. In making further refinements to the LCC and PBP analyses, the Department believes that it is important not to introduce bias by including only refinements that lower the electricity price. Issues such as primary voltage tariffs, de-correlation between the hour of building peak load and air conditioning peak load, putting small buildings on large-building tariffs, using a distribution of fan power ratio, and so forth are second-order effects that tend to lower the energy cost savings. There are other second-order effects, such as sales taxes, seasonal ratchets, and additional riders (particularly fuel cost adjustments) that, when included, tend to raise the energy cost savings. The Department believes that all these effects have roughly the same order of magnitude and the net effect of their inclusion in the calculation of the LCC will be to reduce uncertainty but leave the results essentially unchanged.

(b) Hourly Based Approach

The goal of the hourly based electricity price analysis was to estimate the real cost of meeting air conditioning loads for each building in each subdivision, and to translate these to cost savings that result from a given standard level. In this analysis, the Department treated each subdivision as if it were a single electricity system or control area, with a single hourly varying marginal generation price. The dependence of system load on weather, and system price on load, creates a correlation between the weather-sensitive air conditioning load in each building and the time-varying generation marginal price. This substantially increases the cost of meeting air conditioning loads relative to base loads. Because DOE carried out the building simulations using Typical Meteorological Year (TMY) weather data to represent the correlations correctly, the Department had to produce a set of corresponding TMY system loads and prices for each subdivision. This was done by constructing a model for the load/temperature relationship, and a model for the price/load relationship, from historical data.

The analysis required hourly data for customer loads, local temperatures, system loads, and system prices. The Department took customer loads from the building simulations described above. Historical data on hourly loads are available to the public from the Federal Energy Regulatory Commission (FERC) website through Form 714 filings. See *http://www.ferc.gov/docs-filing/eforms-elec.asp#714*. Historical data on hourly prices come from two sources: Annual data submitted to FERC from regulated utilities and data developed from independent system operator websites. The FERC requires that each year a regulated utility submit FERC Form 714, which includes the ''control area hourly system lambda'' for each hour of the year in dollars per megawatt. A system lambda is the price of generating one additional unit of

electricity. In the FERC Form 714, the system lambda represents the cost to meet the next kilowatt of load, as computed for the local control area of a particular utility using FERC's automatic dispatch methodology. For areas in which there is substantial wholesale electricity market competition, *e.g.*, New England, New York, California, and Pennsylvania-New Jersey-Maryland (PJM), DOE collected load data and day-ahead market clearing prices directly from the independent system operator (ISO) websites. The analysis used data from 2000 for New York, PJM, and New England, and from 1999 for all other areas. The analysis required two types of weather data: Historical and year-typical data. The Department purchased historical data used to construct the models for the years 1999 and 2000 from the National Climatic Data Center. Refer to ANOPR TSD section 8.2.3.1.3 for more information.

The Department computed the energy-cost savings due to a given standard level, assuming that the electricity provider passed all savings on to the customer. The savings have two components: Avoided generation costs and avoided capacity costs. The Department computed avoided generation costs as the sum over each hour of the customer's marginal energy savings times the hourly marginal price, multiplied by factors accounting for additional costs that scale with generation (such as ancillary services) and energy losses. The Department computed the total avoided capacity costs as a total cost per kilowatt of capacity times the customer's load reduction during the hour of the system peak. The total cost per kilowatt for capacity included generation, transmission, and distribution capacity, and factors that account for losses and reserve margins. The Department converted the electricity provider's avoided capacity costs to annual customer savings by applying a fixed charge rate (FCR). The FCR is a factor that converts a given capacity investment to the annual revenue requirement needed to cover all costs associated with the investment. In deregulated wholesale markets, hourly prices are assumed to include a margin to cover generation capacity investments, so DOE did not include these costs in the model. Instead, the Department computed reductions to the electricity provider's annual installed capacity payments that result from the standard. For more detail on the hourly based approach, refer to subsection 8.2.3.1.3 of the ANOPR TSD. The computation of the hourly price is Issue 9 under ''Issues on Which DOE Seeks Comment'' in section IV.E of this ANOPR.

(c) Comparison of Tariff-Based and Hourly Based Prices

Table II.9 summarizes the results for the Department's electricity price analysis for both the tariff-based and hourly based methodologies. The Department computed the marginal price associated with air conditioning loads in each subdivision by taking the ratio for each building of the total cost savings to the total energy-savings between standard levels 9.5 EER and 11.0 EER. The Department then computed the weighted-average value for each subdivision. The table also includes the percentage of the marginal price attributable to demand charges for the tariff-based analysis and to capacity charges for the hourly based analysis.

TABLE II.9.—MARGINAL PRICES COMPUTED FROM AIR CONDITIONING LOAD REDUCTIONS USING THE TARIFF-BASED AND HOURLY BASED ELECTRICITY PRICE MODELS

Subdivision	Weight	Census division	Region	Tariff-based		Hourly based	
				Marginal ¢/kWh	% Demand	Marginal ¢/kWh	% Capacity
1	4.7	New England	New England	9.5	53	10.7	43
2.1	7.4	Middle Atlantic	New York	14.6	53	10.5	35
2.2	5.6	Middle Atlantic	PA, NJ	10.5	27	8.7	48
3	13.7	East North Central	WI, IL, IN, OH, MI	10.8	46	11.0	65
4.1	0.8	West North Central	MN, IA, MO	6.2	44	8.4	60
4.2	4.7	West North Central	ND, SD, NE, KS	7.1	30	9.8	60
5.1	5.6	South Atlantic	DE, MD, VA, WV	7.9	41	9.9	63
5.2	7.9	South Atlantic	NC, SC, GA	7.3	22	7.4	68
5.3	6.6	South Atlantic	Florida	8.0	36	11.0	66
6.1	5.1	East South Central	KY, TN	6.5	38	8.0	68
6.2	5.4	East South Central	MS, AL	6.1	39	12.8	70
7.1	5.3	West South Central	OK, AR, LA	5.8	26	11.6	76
7.2	9.5	West South Central	Texas	10.0	23	10.8	75
8.1	0.6	Mountain	MT, ID, WY	6.1	20	4.5	43
8.2	4.2	Mountain	NV, UT, CO, AZ, NM	8.8	35	9.5	69
9.1	1.7	Pacific	WA, OR	4.5	33	5.4	24
9.2	11.2	Pacific	California	18.5	21	8.5	46
USA	100.0		USA	10.0	35	9.9	60

As Table II.9 shows, the national average effective marginal prices computed from the two approaches are relatively close (within one percent). Thus, on a national basis, the estimated marginal electricity price a provider would charge customers to supply electricity for an air conditioning end use is not substantially different from the price a customer currently pays under today's tariffs. As a result, the LCC results from the two different approaches are not significantly different. The LCC results are discussed later in this section. Also, for more detail on the results of the tariff-based and hourly based electricity price analysis, refer to subsection 8.2.3.1.4 of the ANOPR TSD.

(3) Electricity Price Trend

The electricity price trend in this ANOPR provides the relative change in electricity prices for future years out to the year 2035. The ACEEE and ASE commented that future electricity prices will be difficult to forecast during a period of electricity price restructuring and early indications show that there will be greater price volatility under

deregulated markets. To substantiate its assertion of higher electricity rates in deregulated electricity markets, ACEEE referred to a report by Synapse Energy Economics, ''Marginal Price Assumptions for Estimating Customer Benefits of Air Conditioner Efficiency Standards,'' December 4, 2000, which demonstrates that summer, daytime, wholesale electric prices exceeded average prices by 2.5 ¢/kWh more than annual average wholesale prices and, as markets restructure, suppliers will increasingly pass these higher summer prices on to consumers as higher rates. Refer to *http://www.synapse-energy.com/publications.htm#repo*. The ACEEE also commented that price projections from EIA would not, at this time, be a good indicator of future electricity prices. (ACEEE, No. 10 at pp. 4 and 10; ASE, No. 9 at p. 2)

Rather than speculate on how current volatility in energy markets will affect future electricity prices, DOE has consistently relied on EIA energy price forecasts and has used other forecasts, including the various EIA scenarios, to delimit the energy prices used in standards analyses. For this commercial unitary air conditioner analysis, DOE applied a projected trend in national average electricity prices to each customer's marginal energy expenses. The default electricity price trend scenario used in the LCC analysis is the trend from EIA's *Annual Energy Outlook (AEO) 2003* Reference Case, which presents forecasts or energy supply, demand, and prices through 2005. Spreadsheets used in determining the LCC can be useful tools in evaluating other electricity price trend scenarios, namely, the *AEO 2003* High and Low Growth price trends and constant energy prices. The high economic growth case incorporates higher population, labor force, and productivity growth rates than the reference case. Due to the higher productivity gains, inflation and interest rates are lower compared to the reference case. Investment, disposable income, and industrial production are increased. Projections indicate that economic output will increase by 3.5 percent per year. The low economic growth case assumes lower population, labor force, and productivity gains, with resulting higher prices and interest rates and lower industrial output growth. In the low economic growth case, projections indicate that economic output will increase by 2.4 percent per year over the forecast horizon. The Department will update the analyses conducted for the NOPR to reflect the most recently available AEO.

The *AEO 2003* recognizes that, over the past few years, energy markets have been extremely volatile. (See U.S. Department of Energy-Energy Information Administration (EIA), Annual Energy Outlook 2003 with Projections to 2025, DOE–EIA–0383(2003), January 2003. EIA website: *http://www.eia.doe.gov/oiaf/aeo/pdf/0383(2003).pdf*.) As a result, *AEO 2003* incorporates recent energy market volatility in its short-term projections. The impact of recent energy market volatility is evidenced from the average commercial electricity price estimated by *AEO 2003* for the year 2001. The average rate estimated by *AEO 2003* for 2001 is 5.7 percent greater (or 0.4 ¢/kWh) than that estimated by the *AEO 2000*.[2] Although the *AEO 2003* short-term projections took into account recent events, EIA expects that long term volatility in energy markets will not occur from such future events as supply disruptions or political actions. In other words, EIA estimates that recent electricity market volatility will not impact long term electricity price trends.

Concerning Synapse Energy Economics' wholesale electricity price analysis, DOE does recognize that wholesale summertime electricity costs are on average 2½ ¢/kWh greater than average wholesale costs. The Department's own analysis of hourly based electricity prices showed that marginal generation costs for commercial air conditioning ranged from 0.4 to 3.2¢/kWh greater than average generation costs, depending on regional location. Although generation costs associated with supplying electricity to commercial air conditioning are higher than average generation costs, the national average of resulting customer marginal electricity rates (based on the Department's methodology for converting generation costs into customer rates) is no greater than the national average of those marginal rates derived from current electric utility tariffs. Although the marginal electricity rates can be higher than average rates, the Department sees no reason to adjust EIA's projections of future electricity prices. For more detail on electricity price trend, refer to subsection 8.2.3.2 of the ANOPR TSD. The Department's reliance on EIA's electricity price projections is addressed as Issue 10 under ''Issues on Which DOE Seeks Comment'' in section IV.E of this ANOPR.

[2] In the AEO 2003, EIA reports 2001 electricity prices from their ''*Annual Energy Review 2001*.''

(4) Repair Cost

The repair cost is the cost to the consumer for replacing or repairing components in the air conditioning equipment that have failed. The Department estimated the annualized repair cost for baseline efficiency commercial unitary central air conditioning equipment (*i.e.*, the cost the customer pays annually for repairing the equipment) as half of the equipment price divided by the average lifetime of the equipment. Because data were not available to show how repair costs vary with equipment efficiency, the Department considered two scenarios: repair costs that varied in direct proportion with the manufacturer price of the equipment, and repair costs that remained flat (*i.e.*, did not increase with efficiency).

The Department used repair costs that vary with manufacturer price as the default annualized repair cost scenario in the LCC and PBP analysis. The resulting weighted-average annualized repair cost is $151 and $279 for 7.5-ton and 15-ton commercial unitary central air conditioners, respectively. The repair cost increases with weight and efficiency. Because equipment prices are a function of distribution variables rather than single point-values (*i.e.*, manufacturer price, markups, and sales tax), repair costs reflect a distribution of values. For more detail on repair cost, refer to subsection 8.2.3.3 of the ANOPR TSD.

(5) Maintenance Cost

Maintenance cost is the cost to the commercial consumer of maintaining equipment operation. It is not the cost associated with the replacement or repair of components that have failed (this is covered by the repair cost discussed above). Rather, the maintenance cost is associated with general maintenance (*e.g.*, checking and maintaining refrigerant charge levels and cleaning heat-exchanger coils).

The Department took annualized maintenance costs for commercial air conditioners from data in *RS Means Facilities Maintenance & Repair Cost Data, 1995* (RS Means '95). These data provide estimates of person-hours, labor rates, and materials required to maintain commercial air conditioning equipment. Because data were not available to show how maintenance costs vary with equipment efficiency, the Department decided to use costs that stayed constant as equipment efficiency increased. The estimated, nationally representative, annualized maintenance cost for a commercial unitary air conditioner rated between 36,000 Btu/h and 288,000

Btu/h is $200. For more detail on maintenance cost, refer to subsection 8.2.3.4 of the ANOPR TSD.

ARI believes that the annual maintenance cost that the Department developed is too low. ARI states that commercial air conditioning units need servicing not less than four times per year for filter check/replacement and general cleanliness. As a result, the annual cost is closer to $800 per unit rather than $200. (ARI, No. 14 at p. 3)

As noted above, the Department based the annualized maintenance costs for commercial air conditioners on RS Means '95 data. In addition to providing estimates of person-hours, labor rates, and materials required to maintain commercial air conditioning equipment, RS Means '95 specifies eleven actions that constitute required annual maintenance, including a thorough check of all components in the unit. Because RS Means '95 provides an explicit accounting of the actions and costs of maintaining commercial unitary central air conditioning equipment, and no commenter has done so, the Department will retain its use of $200 annual maintenance cost in its analysis.

(6) Lifetime

The Department defines lifetime as the age at which a commercial unitary air conditioner is retired from service. It based the median lifetime of commercial unitary air conditioners on data from the 1999 *ASHRAE HVAC Applications Handbook*, which estimates a median lifetime of 15 years for commercial unitary air conditioners. The Department found no other data to show a different median lifetime for commercial unitary air conditioning equipment. Because a range of values rather than a single-point value more accurately represents the lifetime of such equipment, DOE created a survival function for commercial unitary air conditioners based on data for residential heat pump systems. Although residential heat pump systems are smaller in cooling capacity than commercial air conditioners, they are vapor compression systems that have components and designs that are similar to those of commercial systems. Thus, DOE believes that residential heat pumps provide a valid basis from which to construct a survival function for commercial unitary air conditioners. The Department created a Weibull distribution to approximate the actual survival function for residential heat pumps. The Department then modified the approximated residential-heat-pump-based survival function to yield a median lifetime equal to that for commercial air conditioners. The mean lifetime from the derived Weibull-based commercial air conditioner survival function is 15.4 years. For more detail on the lifetime analysis, refer to subsection 8.2.3.5 of the ANOPR TSD.

ARI provided an analysis of EIA's 2001 Residential Energy Consumption Survey (RECS) to show that the median life of air conditioning equipment is 7 years, as opposed to 15 years. Acknowledging the difficulty in getting lifetime data for commercial unitary air conditioning equipment, ARI stated that, although the RECS data are based on residential equipment, they are the best available surrogate data for commercial air conditioning. (ARI, No. 14 at p. 2)

After reviewing ARI's analysis, the Department determined that the data in RECS represent the age of the equipment, not the age at which the equipment was retired from service (*i.e.*, the equipment lifetime). In view of this important distinction, the equipment lifetime required for the commercial unitary air conditioner analysis is the operational life of the equipment. The RECS data do not represent the lifetime, rather, they simply represent the age of the equipment at the time of the survey. Thus, even if DOE assumes that the residential equipment data are a surrogate for commercial unitary air conditioning, the RECS data are not useful for establishing equipment lifetime. The Department continues to seek input from interested parties concerning equipment lifetime. This concern is addressed in Issue 11 under ''Issues on Which DOE Seeks Comment'' in section IV.E of this ANOPR.

(7) Discount Rate

The discount rate is the rate at which DOE discounted future expenditures to establish their present value. Both ACEEE and NRDC commented that DOE should use the weighted-average cost of capital (or the avoided return on capital) as the basis for estimating discount rates. (ACEEE, No. 10 at p. 6; NRDC, No. 6 at pp. 8 and 9) In stating that there is a wide range of expected payback periods for investments made in the commercial sector, Southern Company also appeared to imply that discount rates should be based on the weighted-average cost of capital. (Public Workshop Tr., No. 2EE at p. 119) The NRDC added that a valid estimate of market rates of return on capital investments requires a long-term perspective to factor out risk and short-term market volatility. It also noted that, when adjusting for survivorship biases and transaction costs, real rates of return on investments should range from zero to five percent, even for risky corporate investments. (NRDC, No. 6 at pp. 8–9) Advocating an approach based on the cost of capital, ACEEE also stated that discount rates used in the process of setting equipment standards for the ASHRAE/IESNA Standard 90.1–1999 were too high. (ACEEE, No. 10 at pp. 6 and 11) The Alliance to Save Energy concurred with ACEEE about the discount rates used in the process to update the ASHRAE/IESNA Standard 90.1–1999 equipment standards. (ASE, No. 9 at p. 2) Although not advocating a specific approach for developing discount rates, Trane stated that discount rates in the range of 12–15 percent are appropriate for users of commercial unitary air conditioning. Trane also noted that the Department should consider income tax effects if it intends to include them in the development of discount rates. (Public Workshop Tr., No. 2EE at pp. 189–190)

The Department believes the most accurate method for estimating the discount rate is by evaluating the cost of capital of companies that purchase commercial unitary air conditioning equipment. Most companies use both debt and equity capital to fund investments. Therefore, for most companies, the discount rate is the weighted average cost of debt and equity financing, or the weighted-average cost of capital (WACC), less the expected inflation. The Department calculated the expected inflation (2.3 percent) from the average of the last five quarters' change in gross domestic product (GDP) prices.

Because the WACC method is specific to commercial firms, the technique is specific to commercial equipment and, therefore, was not applied in past rulemakings covering residential products. However, recent residential product rulemakings, specifically central air conditioners and heat pumps, use a discount rate technique that is conceptually similar to the WACC methodology. The technique for residential products determines how an air conditioner or heat pump purchase would affect a household's financial situation, which is similar to what the WACC method attempts to do for commercial firms. (See U.S. Department of Energy, Energy Efficiency and Renewable Energy: *Technical Support Document: Energy Efficiency Standards for Consumer Products: Residential Central Air Conditioners and Heat Pumps (Including: Regulatory Impact Analysis)*, May, 2002, Washington, DC, Chapter 5, p. 5–71, at *http://www.eere.energy.gov/buildings/appliance_standards/residential/ac_central.html*.) For more detail on the discount rate for future expenditures,

refer to subsection 8.2.3.6 of the ANOPR TSD.

Lennox questioned who the consumer is and who would benefit from a life-cycle cost analysis: The person that owns the commercial unitary air conditioner, the person that owns the building, or the person that leases the building? Lennox then stated that consumers more often lease this equipment, which needs to be factored into the analysis. (Public Workshop Tr., No. 2EE at pp. 118 and 199) Trane and NRDC also addressed the issue of the user's identity. Trane noted that the analysis should encompass all users, whether they are building owners or occupants. The NRDC stated that a split incentive exists between building lessees and owners, *i.e.*, there is no incentive for building owners to purchase more efficient equipment because the lessee is paying the electricity bill. As a result, the market fails to encourage the use of more efficient air conditioning equipment, and standards are a way to correct this market failure. (Public Workshop Tr., No. 2EE at p. 215; NRDC, No. 6 at p. 5)

In addressing the user's identity, the Department included both building owners and lessors in its development of discount rates, established a sample of companies that use commercial air conditioning according to ownership categories, and collected pertinent financial data from those companies to derive an appropriate set of discount rates. Ownership here is defined by the building occupant. Included in these ownership categories are the owners of commercial buildings (property owners), retail firms, medical service and hospital companies, industrial firms, hotels, and food service companies (restaurants and grocery stores). The Department determined ownership shares by building square footage from the 1999 CBECS data. According to CBECS, about 60 percent of buildings are owner-occupied and the remaining 40 percent either are non-owner-occupied or leased by property owners. Of the 40 percent of buildings that are leased, half realized a WACC based on the building's occupancy, and the other half realized discount rates based on the WACC of the property owner. Pertinent financial data from companies using commercial air conditioning equipment were taken from Damodaran Online. (See Damodaran Online at *http://pages.stern.nyu.edu/~adamodar/New_Home_Page/data.html* and the ''compfirm.xls'' spreadsheet.)

The NRDC commented that values of 0 to 5 percent were appropriate, while Trane maintained that DOE should use values ranging from 12 to 15 percent. (NRDC, No. 6 at pp. 8 and 9; Public Workshop Tr., No. 2EE at pp. 189 and 190) Deducting expected inflation from the cost of capital provides estimates of the real discount rate by ownership category, shown in Table II.10. The mean real discount rate for these companies varies between 3.0 percent (public for-profit) and 7.3 percent (public not-for-profit). The weighted-average or mean discount rate across all companies is 6.1 percent. The Department's approach for estimating the cost of capital provides a measure of the discount rate spread as well as the average discount rate. The discount rate spread by ownership category represented by the standard deviation ranges between 0.7 percent and 3.2 percent. Thus, the variability in the discount rate is as low as less than 1 percent and as high as 14 percent. By characterizing the discount rates with probability distributions based on a standard deviation, the range of discount rates used in the analysis captures almost the full breadth of values suggested by the interested parties.

TABLE II.10.—REAL DISCOUNT RATES BY OWNERSHIP CATEGORY*

Ownership category	Standard industrial classification (SIC) code	Ownership shares (percent)	Mean real discount rate (WACC) (percent)	Standard deviation (percent)	Number observations
Retail stores	53, 54, 56	16.5	7.1	2.1	218
Property owners and managers	6720	21.2	5.2	0.7	11
Medical services	8000	6.7	7.0	1.7	115
Industrial companies	1000–4000	4.9	6.9	3.2	253
Hotels	7000	4.0	5.6	1.5	51
Food service companies	5400, 5812	5.3	6.1	1.4	88
Office/Service sector	5910–9913	19.4	6.9	2.1	128
Public for profit	N.A	11.0	3.0	0.7	41
Public not for profit	7950, 8299	11.0	7.3	1.8	68
Weighted Average		N.A	6.1	1.6	N.A.

*Sources: CBECS (1999), Damodaran Online (2002) and LBNL calculations.

(8) Effective Date

The effective date is the date on and after which a manufacturer must comply with an energy conservation standard in the manufacture of covered equipment. (See 10 CFR 430.2.) In accordance with 42 U.S.C. 6313(a)(6)(C), the effective date of any new energy efficiency standard for commercial unitary air conditioners and heat pumps that is established by rule and that is more stringent than the amended ASHRAE/IESNA Standard 90.1, is four years after the final rule is published in the **Federal Register**. Consistent with its published regulatory agenda, the Department assumed that the final rule would be issued in 2004 and that, therefore, the new standards would take effect in 2008 and used these dates in the ANOPR analyses. For the NOPR analyses, the Department will adjust these dates to accurately reflect then-current expectations for the timing of the issuance of a final rule. The Department calculated the LCC for customers as if each new commercial unitary air conditioner or heat pump purchase occurs in the year the standard takes effect. For purposes of conducting the analyses for this ANOPR, it based the cost of the equipment on year 2008; however, because the Department collected manufacturing cost data for the ANOPR engineering analysis in 2001, it expresses all dollar values as year 2001 dollars. Also, the effective date of a standard is addressed in subsection 8.2.3.7 of the ANOPR TSD.

2. Inputs to the Payback Period Analysis

The data inputs to the PBP analysis are the total installed cost of the equipment to the customer for each efficiency level and the annual (first

year) operating expenditures for each efficiency level. The PBP analysis uses the same inputs as the LCC analysis, except that the PBP analysis does not need electricity price trends and discount rates. Because the PBP is a ''simple'' payback, the required electricity rate is only for the year in which a new standard is to take effect, in the case of this ANOPR the year 2008. The electricity rate that DOE used in the PBP calculation was the price projected for that year. For more detail on payback period inputs, refer to section 8.3 of the ANOPR TSD.

3. Preliminary Results

The preliminary results of the LCC and PBP analyses are based on: (1) A sample of commercial buildings that represent all unitary air conditioner users; (2) output from the engineering, building simulation, and equipment price analyses; and (3) on current electric utility tariffs.

a. Life-Cycle Cost Results

This section presents LCC results for the efficiency-improvement levels specified in the engineering analysis. It provides only the LCC results from the tariff-based approach because the national average tariff-based and hourly based marginal electricity prices are so similar (refer to Table II.9). The hourly based approach provides important information because today's electric utility tariffs reflect, to some extent, the prices an electricity provider might charge a commercial customer for supplying electricity to operate a unitary air conditioner under an hourly based pricing structure. However, the hourly based prices are still an estimate and are not the actual electricity prices that commercial customers pay. As a result, the Department is designating the tariff-based approach as the primary analysis approach because it is based on electricity prices that commercial customers must actually pay for operating air conditioning equipment. The Department will use the hourly based approach as supplemental information that indicates what electricity pricing might be like under an hourly regime. The hourly based LCC results are very similar to the results from the tariff-based LCC analysis. For more detail on the results of the tariff-based and hourly based approaches to electricity prices, refer to sections 8.4 and 8.5 of the ANOPR TSD.

Most of the inputs to the LCC analysis are uncertain and are therefore represented by a distribution of values rather than a single-point value. As a result, the LCC analysis generates a distribution of results to represent the LCC for any given efficiency level.

The Department's first step in developing LCC results was to establish the baseline LCC for each of the two commercial air conditioner equipment classes. As noted earlier, DOE selected the ASHRAE/IESNA Standard 90.1–1999 levels as the baseline efficiency levels for the present rulemaking. Table II.11 summarizes the baseline distributions by showing the mean, median, minimum, and maximum LCCs.

TABLE II.11.—BASELINE LCC

Equipment class	Minimum	Median	Mean	Maximum
≥65,000 to <135,000 Btu/h	$6,667	$18,605	$20,514	$93,747
≥135,000 to <240,000 Btu/h	11,395	34,876	39,044	197,535

The Department presents the differences in the LCC of standard-level equipment relative to the baseline commercial unitary air conditioner design. The LCC differences are depicted as a distribution of values. Tables II.12 and II.13 show the mean and the percent of units with LCC savings for each standard level.

TABLE II.12.—SUMMARY OF LCC RESULTS FOR ≥65,000 TO <135,000 BTU/H COMMERCIAL UNITARY AIR CONDITIONERS

EER	Mean decrease in LCC from baseline (10.1 EER) (2001$)	Percent of units with LCC savings
10.5	$290	98
11.0	533	93
11.5	598	81
12.0	399	59

TABLE II.13.—SUMMARY OF LCC RESULTS FOR ≥135,000 TO <240,000 BTU/H COMMERCIAL UNITARY AIR CONDITIONERS

EER	Mean decrease in LCC from baseline (9.5 EER) (2001$)	Percent of units with LCC savings
10.0	$959	100
10.5	1,704	99
11.0	2,199	97
11.5	2,359	91
12.0	2,027	77

b. Payback Period Results

This section presents PBP results based on annual operating costs calculated from tariff-based electricity prices. Similar to the LCC differences, the Department depicts PBP results as a distribution of values. Tables II.14 and II.15 summarize the PBP results for each of the two commercial unitary air conditioner equipment classes.

TABLE II.14.—SUMMARY OF PBP RESULTS IN YEARS FOR ≥65,000 TO <135,000 BTU/H COMMERCIAL UNITARY AIR CONDITIONERS

EER	Median	Mean
10.5	2.3	2.6
11.0	3.1	3.5
11.5	4.3	5.1
12.0	6.4	8.1

TABLE II.15.—SUMMARY OF PBP RESULTS IN YEARS FOR ≥135,000 TO <240,000 BTU/H COMMERCIAL UNITARY AIR CONDITIONERS

EER	Median	Mean
10.0	1.5	1.6
10.5	1.8	2.0
11.0	2.4	2.7
11.5	3.2	3.7
12.0	4.5	5.5

G. National Impact Analysis

The national impacts analysis assesses the NPV of total customer LCC and NES. Assuming an effective date of 2008, the Department determined both the NPV and NES for all of the energy

efficiency levels considered for the two equipment classes of commercial unitary air conditioners. ARI requested a quick adoption of the ASHRAE/IESNA Standard 90.1–1999 energy efficiency levels. (ARI, No. 14 at p. 3). The Department defined quick adoption to mean an effective date of 2004, instead of 2008. In this way, the Department can evaluate the national benefits of adopting more stringent standards at a later effective date compared to adopting the ASHRAE/IESNA 90.1–1999 standard levels almost immediately.

To make the analysis more accessible and transparent to all stakeholders, the Department prepared a user-friendly NES Spreadsheet Model in Microsoft Excel to forecast energy savings and the national economic costs and savings resulting from new standards. Consequently, a stakeholder can change certain input quantities to assess any impacts of possible new standards on the NES and NPV. Unlike the LCC Analysis, the NES Spreadsheet Model does not use probability distributions for inputs or outputs. To assess the impact of input uncertainty on the NES and NPV results, the DOE can conduct sensitivity analyses as needed for future analyses by running scenarios on input variables that are of interest to stakeholders. The Department conducted a preliminary assessment of the aggregate impacts at the national level for this ANOPR. For more detail on the NES and NPV, refer to Chapter 10 of the ANOPR TSD.

Table II.16 summarizes the inputs used to calculate the NES and NPV of the various energy efficiency levels. Chapter 10 of the ANOPR TSD provides a more detailed discussion of these inputs.

TABLE II.16.—SUMMARY OF NES AND NPV INPUTS

Parameter	Data description
Annual Energy Consumption per Unit	Annual weighted-average values are a function of efficiency level (established from the Building Simulation Analysis, section II.C) and efficiency trend (base case and standards case efficiencies as noted below).
Base Case Efficiencies	Annual shipment-weighted efficiencies are based on historical residential central air conditioner shipment-weighted efficiency trends and limited commercial air conditioner shipment-weighted efficiencies. Before 1993: Efficiency trend growth rate equivalent to 1982–1991 residential equipment efficiency trend. 1993–1994: Efficiency jump equivalent to 1991 to 1992 residential equipment efficiency jump. 1994–1998: Efficiency trend growth rate equivalent to 1992–1999 residential equipment efficiency trend. 1999–2001: Actual shipment-weighted efficiencies from ARI. 2002–2035: Efficiency trend growth rate equivalent to ½ of 1992–1999 residential equipment efficiency trend.
Standards Case Efficiencies (2008–2035)	Annual shipment-weighted efficiencies are based on a roll-up efficiency scenario and parallel growth trend.
Shipments	Annual shipments from shipments model (see details in section II.G.3).
Equipment Stock	Number of air conditioning units of each vintage (age). Based on annual shipments and the age of the equipment. The age of the equipment is characterized with a retirement function with an average lifetime of 15.4 years.
National Energy Consumption	Product of the annual energy consumption per unit and the stock (*i.e.*, the number of air conditioning units of each vintage.
Electricity Site-to-Source Conversion Factors	Conversion varies yearly and is generated by DOE/EIA's National Energy Modeling System (NEMS) program (a time series conversion factor; includes electric generation, transmission, and distribution losses).
Total Annual Installed Cost	Annual per unit weighted-average values are a function of efficiency level (established from the Life-Cycle Cost Analysis, section II.F). Total annual costs are the per unit cost multiplied by the shipments forecasted.
Total Annual Operating Cost Savings	Annual per unit savings consist of the per unit electricity cost savings, the per unit repair costs, and the per unit maintenance costs (as noted below). Total annual costs are the per unit cost multiplied by the shipments forecasted.
Annual Electricity Cost Savings	Annual per unit weighted-average values are a function of the annual energy consumption, electricity prices (established from the Life-Cycle Cost Analysis, section II.F), and electricity price trends. Only expenses based on tariff-based electricity prices are used in the NES spreadsheet model.
Electricity Price Trends	2003 EIA Annual Energy Outlook forecasts (to 2025) and extrapolation for 2025 and beyond (see the Life-Cycle Cost Analysis, section II.F).
Annual Repair Costs	Annual per unit weighted-average values are a function of efficiency level (established from the Life-Cycle Cost Analysis, section II.F).
Annual Maintenance Costs	Annual per unit weighted-average value equals $200 (established from the Life-Cycle Cost Analysis, section II.F).
Discount Factor	Based on both a 3 percent and 7 percent real discount rate and the year in which the present value of costs and savings are being determined.
Present Value of Costs	Annual total installed cost in each year discounted to the present using the discount rate.
Present Value of Savings	Annual operating cost savings in each year discounted to the present using the discount rate.
Present Year	Future expenses are discounted to year 2001.
Effective Date of Standard	2008 (2004 for ASHRAE/IESNA 90.1–1999 efficiency levels).

1. National Energy Savings (NES)

The Department calculated the national energy consumption by multiplying the number or stock of commercial unitary air conditioners (by vintage) by the unit energy consumption (also by vintage). Vintage is the age of the equipment (varying from one to about 30 years). The Department calculated annual NES from the difference between national energy consumption in the base case (without new standards) and each standards case (with standards). Cumulative energy savings are the undiscounted sum of the

annual NES that DOE determined over specified time periods. The NES analysis which will accompany the NOPR will include both discounted and undiscounted values for future energy savings to account for their timing. For more detail on NES and consumer impacts, refer to Chapter 10 of the ANOPR TSD.

The stock of commercial unitary air conditioning equipment is dependent on annual shipments and the lifetime of the equipment. The Department developed shipments projections under a base case and standards cases for a variety of possible equipment efficiency scenarios and equipment efficiency trends. It determined that shipment projections under the standards cases were lower than those from the base case projection, due to the higher installed cost of the more efficient equipment. Higher installed costs caused some customers to forego equipment purchases. As a result, the Department used the standards case shipments projection and, in turn, the standards case stock to determine the NES and to avoid the inclusion of savings due to displaced shipments.

a. National Energy Savings Inputs

As summarized in Table II.16 above, the inputs for the determination of NES are: (1) Annual energy consumption per unit, (2) shipments, (3) equipment stock, (4) national energy consumption, and (5) electricity site-to-source conversion factors.

(1) Annual Energy Consumption per Unit

The annual energy consumption per unit is the energy consumed by a commercial unitary air conditioning unit per year. The annual energy consumption is directly tied to the efficiency of the unit. Thus, knowing the efficiency of a commercial unitary air conditioning unit allows for the determination of the corresponding annual energy consumption. As described below, the Department determined annual historical and forecasted shipment-weighted average equipment efficiencies which, in turn, allowed for the determination of shipment-weighted, annual, energy-consumption values.

The Department based historical, shipment-weighted, average efficiency trends for commercial air conditioners on a combination of commercial air conditioner efficiency data from 1999 through 2001 and residential central air conditioner efficiency trends. Once DOE established historical efficiency trends, it established future trends of equipment efficiency and, in turn, annual energy consumption by extrapolating it from the historical trend. The Department forecasted future trends of equipment efficiency for a base case and for standards cases. The difference in equipment efficiency between the base and standards cases was the basis for determining the reduction in per-unit annual energy consumption due to new standards. For more detail on annual energy consumption per unit, refer to subsection 10.2.2.1 of the ANOPR TSD.

The Department chose a growth rate for its forecasted, base-case efficiency trends of one-half the observed growth rate of the historical residential air conditioner efficiency trend during the 1990s. The Department made this decision based on observed trends in the historical commercial air conditioner efficiency data. The three years of commercial air conditioner efficiency data revealed a significant shift to higher equipment efficiencies from the year 2000 to 2001. Although the ASHRAE/IESNA 90.1–1999 standards are not mandatory, it appears that their effect has been to move the commercial air conditioner market to higher equipment efficiencies. Historical efficiency trends for residential central air conditioners indicate that the most significant effect of ASHRAE/IESNA 90.1–1999 standards on transforming the market is in the short term. In the case of residential central air conditioners, for years immediately after a new minimum standard became effective the shipment-weighted efficiencies grew at an annual rate of less than one percent. Therefore, if historical efficiency trends for related products and equipment are any indication, the growth rate of the commercial unitary air conditioner efficiency trend in the long term (*i.e.*, for years after 2001) should be much lower than the shift in equipment efficiencies observed between 2000 and 2001.

The Department based its standards case forecasts (*i.e.*, forecasts of efficiency trends after standards take effect) on a roll-up efficiency scenario and parallel growth trend. The roll-up scenario moves or rolls-up all equipment efficiency levels from below a prospective standard to the minimum efficiency level allowed under the new standard. The distribution of equipment at efficiency levels above the prospective standards is unaffected (*i.e.*, this equipment remains at its pre-standard efficiency levels). The roll-up efficiency scenario dictates how DOE determined efficiency distributions in the first year a new standard takes effect, but does not define future distribution of equipment efficiencies. Under the parallel growth trend, the Department assumes that the standards case efficiency trend parallels the base case efficiency trend. In other words, the initial jump in shipment-weighted efficiency that occurs when the standard first becomes effective carries on throughout the forecast.

The 11.5 EER and 12.0 EER standards-case efficiency trends are notable exceptions to the use of the parallel growth trend for the entire time span of the forecast (*i.e.*, through 2035). Because the maximum technologically feasible design is 12.0 EER, the maximum shipment-weighted efficiency for any given year is 12.0 EER. As a result, because the efficiency trend for the 11.5 EER standards case achieves a shipment-weighted efficiency of 12.0 EER in the year 2023, the forecasted efficiency trend remains flat from the year 2023 through 2035. In the case of the 12.0 EER standards case, there is a shipment-weighted efficiency of 12.0 EER immediately after the standard becomes effective. Thus, the efficiency trend is flat (*i.e.*, stays fixed at 12.0 EER) throughout the entire forecast.

(2) Shipments

The Department forecasted shipments for the base case and all standards cases. Forecasted shipments are addressed in subsection 10.2.2.2 of the TSD ANOPR. The Shipments Model is discussed in more detail in section II.G.3 of this ANOPR.

(3) Equipment Stock

The commercial unitary air conditioner stock is the number of unitary air conditioners purchased or shipped in a particular year that survive in a later year. The NES Spreadsheet Model keeps track of the number of commercial unitary air conditioners shipped each year. The Department assumes that commercial unitary air conditioners have an increasing probability of retiring as they age. The probability of survival, as a function of years after purchase, is the survival function. Commercial unitary air conditioner lifetimes, otherwise called the vintage, range from one to about 30 years, with an average value of 15.4 years. Note that the resulting stock of commercial unitary air conditioners under all standards cases is less than that under the base case due to the smaller number of shipments forecasted for the standards cases. For more detail on equipment stock, refer to subsection 10.2.2.3 of the ANOPR TSD.

(4) National Annual Energy Consumption

The national annual energy consumption is the annual energy consumption per commercial unitary air conditioner multiplied by the number of commercial unitary air conditioners of each vintage. This approach accounts for differences in unit energy consumption from year to year.

In determining national annual energy consumption, DOE initially calculated the annual energy consumption at the site (*i.e.*, electricity in kWh consumed by the commercial unitary air conditioning unit inside the building it is serving). The Department then calculated primary energy consumption from site energy consumption by applying a conversion factor to account for losses, such as those losses associated with the generation, transmission, and distribution of electricity. For more detail on national annual energy consumption, refer to subsection 10.2.2.4 of the ANOPR TSD.

(5) Electricity Site-to-Source Conversion Factors

To transform site energy savings into source energy savings, DOE uses electricity site-to-source energy conversion factors that vary from year to year. The Department based the annual source conversion factors used for the analysis conducted for this ANOPR on U.S. average values from the commercial sector, calculated from the *AEO 2003*. For analyses conducted in the future, the Department plans to use marginal conversion factors specific to the type of generation sources (*i.e.*, power plants) displaced from decreases in national energy consumption resulting from the use of more efficient commercial unitary air conditioners. The resulting conversion factors will change over time. For more information on electricity site-to-source conversion factors, refer to subsection 10.2.2.5 of the ANOPR TSD.

2. National Net Present Value

The NPV is the sum over time of discounted net savings. The national NPV of each candidate standards level is the difference between the base case national average LCC and the national average LCC in the standards case. For more detail on national net present value, refer to section 10.3 of the ANOPR TSD.

a. National Net Present Value Calculations

The Department calculated net savings each year as the difference between total operating cost savings (including electricity, repair, and maintenance cost savings) and increases in total installed costs (including equipment price and installation cost). The Department calculated savings over the life of the equipment, which accounts for the differences in yearly energy rates. The Department calculated the NPV as the difference between the present value of operating cost savings and the present value of increased total installed costs. It discounted future costs and savings to the present with a discount factor. The Department calculated the discount factor from the discount rate and the number of years between 2001 (the year to which DOE discounted the sum) and the year in which the costs and savings occur. An NPV greater than zero shows net savings (*i.e.*, the energy efficiency standard reduces customer expenditures in the standards case relative to the base case). An NPV that is less than zero indicates that the energy efficiency standard incurs net costs.

The elements of the NPV can be expressed in another form, as the benefit/cost ratio. The benefit is the savings in decreased operating cost (including electricity, repair, and maintenance), while the cost is the increase in the total installed cost (including equipment price and installation cost) due to standards, relative to the base case. When the NPV is greater than zero, the benefit/cost ratio is greater than one.

In the determination of the NPV, the Department calculated costs as the product of the difference in the total installed cost between the base case and standards case, and the annual sales volume or number of shipments in the standards case. Because costs of the more efficient equipment purchased in the standards case are higher than those of equipment purchased in the base case, price increases appear as negative values in the NPV.

The Department depicted monetary savings as decreases in operating costs associated with the higher energy efficiency of equipment purchased in the standards case compared to the base case. Total operating cost savings are the product of savings per unit and the number of units of each vintage surviving in a particular year. Savings appear as positive values in the NPV.

As noted earlier, the Department determined that shipment projections under the standards cases were lower than those from the base case projection, due to the higher installed cost of the more efficient equipment. As a result, DOE used the standards case shipments projection and, in turn, the standards case stock, to determine the NPV, to avoid the inclusion of operating cost savings and increased total installed costs due to displaced shipments.

b. Net Present Value Inputs

The inputs for the determination of NPV are: (1) Total annual installed cost, (2) total annual operating cost savings, (3) discount factor, (4) present value of costs, and (5) present value of savings. Net present value inputs are discussed below. Also, for more detail on net present value inputs, refer to subsection 10.3.2 of the ANOPR TSD.

(1) Total Annual Installed Cost

An increase in the total annual installed cost to the Nation is the annual change in the per-unit total installed cost (the difference between the base case and the standards case) multiplied by the shipments forecasted in the standards case. As noted earlier concerning the national energy savings, DOE used the standards case shipments forecast to avoid miscounting the reduction in shipments as a reduction in total installed costs.

The total installed cost includes both the equipment cost and the installation price, and is a function of equipment efficiency. The equipment cost includes the distribution markups (as determined in section II.E of this ANOPR) that are applied to the manufacturer costs estimated in the engineering analysis (section II.C of this ANOPR). The resultant equipment prices increase with equipment efficiency. The Department based average per-unit equipment costs on average manufacturer prices, multiplied by average overall markup values. With regard to installation prices, the Department varies installation prices in direct proportion to the weight of the equipment (section II.F.1.a of this ANOPR). The Department developed linear relationships of operating weight as a function of equipment efficiency for 7.5-ton and 15-ton commercial unitary air conditioners and assumed the installation price increased in the same proportion. It based average per-unit installation prices on nationally representative values for each of the two commercial unitary air conditioner equipment classes. Because DOE calculated the total installed cost as a function of equipment efficiency, it could determine historical and forecasted total installed costs based on the annual shipment-weighted efficiency levels specified in the base case and standards case efficiency trends.

(2) Total Annual Operating Cost Savings

The annual operating cost savings to the Nation is the annual change in the

per-unit annual operating costs (the difference between base case and standards case) multiplied by the shipments forecasted in the standards case. As just noted earlier concerning the total annual installed cost, DOE used the standards case forecast to avoid miscounting the reduction in shipments as an operating cost savings. The annual operating cost includes the electricity, repair, and maintenance costs.

As described in the discussion of the LCC Analysis, the Department calculated annual electricity expenses based on two approaches: A tariff-based approach and an hourly based approach. The hourly based approach resulted in annual energy expenses which were, on average, less than one percent different from those in the tariff-based analysis. As discussed in section II.F.3.b. (LCC results), because the resulting national customer economic impacts from the two approaches would not be significantly different, the Department designated the tariff-based analysis as the primary analysis approach. Thus, the NPV calculations are based only on the results from the tariff-based approach.

The Department determined weighted-average per-unit annual energy expenses as a function of equipment efficiency. As discussed in the Building Simulation Analysis, Chapter 6 of the ANOPR TSD, DOE conducted whole-building simulations on a representative sample of commercial buildings that use commercial unitary air conditioning equipment. The Department assigned tariff-based electricity rates to each building to determine the annual energy expense for air conditioning in that building. Using the representative set of buildings, DOE performed a weighted-average calculation to arrive at the net present values as a function of equipment efficiency. The Department based the weighting not only on the representativeness of the building, but also on the representativeness of the electric utility to which the building was assigned, as well as the number of air conditioning units that were required to meet the simulated cooling load.

As discussed in the LCC Analysis, Chapter 8 of the ANOPR TSD, the Department based the average annual repair costs on the weight of the equipment, and in turn, the equipment efficiency, while it determined average annual maintenance costs to be $200 regardless of cooling capacity or efficiency level. Thus, annual maintenance costs did not factor into the determination of the total operating cost savings.

Because the Department calculated the annual energy expense and repair costs as a function of equipment efficiency, it could determine historical and forecasted annual energy expenses and repair costs based on the annual shipment-weighted efficiency levels specified in the base case and standards case efficiency trends. Further, the Department characterized each standards case with three efficiency scenarios and three growth trends, and from them it developed annual energy expense and repair cost trends for a total of nine standards cases for each possible new standard.

(3) Discount Factor

The discount factor is the factor by which DOE multiplied monetary values in one year to determine the present value in a different year. The discount factor is a function of the discount rate, the year of the monetary value, and the year in which the present value is being determined. For example, assuming a discount rate of seven percent, to discount monetary values in the year 2010 to values in the year 2001, DOE would use a discount factor of $1/(1.07)^9$ or 0.544.

The ACEEE commented that long-term social discount rates are appropriate for assessing the national impacts of standards. (Public Workshop Tr., No. 2EE at p. 201) Consistent with the Process Rule, the Department estimated national impacts with both a three-percent and a seven-percent real discount rate as the average real rate of return on private investment in the U.S. economy. These discount rates are used in accordance with the Office of Management and Budget's (OMB) guidelines on Regulatory Analysis. (OMB Circular A–4, section E, September 17, 2003) See Chapter 10 of the TSD for more details on national impacts based on three-percent and seven-percent discount rates. The Department defines the present year as 2001 for consistency with the year in which the Department collected manufacturer cost data.

(4) Present Value of Costs

The present value of increased total installed costs is the total installed cost increase (i.e., the difference between the standards case and base case) discounted to the present, and summed over the time period for which DOE evaluated the impact of standards (i.e., from the effective date of standards for this ANOPR in year 2008 to the year 2035).

Costs are increases in total installed cost (including both equipment cost and installation price) associated with the higher energy efficiency of commercial unitary air conditioners purchased in the standards case compared to the base case. The Department calculated total equipment costs as the difference in total installed cost for new equipment purchased each year, multiplied by the shipments in the standards case.

(5) Present Value of Savings

The present value of operating cost savings is the annual operating cost savings (i.e., the difference between the base case and standards case) discounted to the present, and summed.

Savings are decreases in operating costs (including electricity, repair, and maintenance) associated with the higher energy efficiency of commercial unitary air conditioners purchased in the standards case compared to the base case. Total operating cost savings are the savings per unit multiplied by the number of units of each vintage surviving in a particular year. Equipment consumes energy over its entire lifetime, and for units purchased in 2035 the present value of savings includes energy expenses incurred until the unit is retired from service.

3. Shipments Model

The Department chose an accounting model to prepare shipment scenarios for the baseline and the various standard levels considered for commercial unitary air conditioners. The model tracks the stocks (inventory of installed equipment) and purchases of equipment in the two equipment classes of commercial unitary air conditioners. Events and customer decisions influence how the stock and supply of commercial air conditioners flow from one category to another. The Department modeled decisions that are influenced by economic parameters (*i.e.,* total installed cost, operating cost, and income) with a logit probability model. The logit probability model is described later in this section.

The Department organized the model into three classes of elements: Stocks, events, and decisions. It divided stocks of commercial unitary air conditioners into ownership categories, and units are assigned to age categories. Events are things that happen to stocks independent of economic conditions, *i.e.*, breakdowns requiring repair or replacement. Decisions are customer reactions to market conditions, *e.g.*, whether to repair or replace equipment, or purchase an air conditioner for a building which does not have one. The model characterizes customer purchase decisions by market segments. The model uses decision trees to describe customer choices for purchases and

repairs. A logit probability model simulates customer purchase decisions that are based on equipment price, operating costs, and business income level. A logit model allows a person to pinpoint variables that affect the probability of purchase. For more detail on the shipments model, refer to Chapter 9 of the ANOPR TSD.

a. Ownership Categories

The Department first divided buildings into commercial air conditioner markets, then further divided the two markets into four different ownership categories, including: (1) New buildings; (2) existing buildings with a commercial unitary air conditioner; (3) buildings without a commercial unitary air conditioner; and (4) buildings with an extended-life commercial unitary air conditioner (*i.e.*, equipment repaired to extend its life). The Department refers to the population of commercial unitary air conditioner units in each ownership category as the stock of commercial unitary air conditioner units of that category. Accounting equations relate annual changes in stocks to activities in the various market segments.

b. Market Segments

The Department divided commercial unitary air conditioner purchases into four market segments:

- *Net New Building Market:* Net increases in the building stock that force the purchase of new commercial unitary air conditioners.
- *Regular Replacement Market:* Most commercial unitary air conditioner purchases are to replace an existing system that has broken down after completion of its useful life.
- *Extra Repair Market:* Because replacement of commercial unitary air conditioners is costly, a few customers will rebuild or repair a malfunctioning system (thus extending its lifetime), rather than purchasing a new system. Eventually, even extended-life commercial unitary air conditioners are replaced.
- *Buildings Without a Commercial Air Conditioner:* Owners of some buildings without a commercial air conditioner will purchase and become new users of commercial unitary air conditioners.

The Department modeled events and decisions (*e.g.*, the probability that an existing commercial unitary air conditioner has a problem and the customer's course of action) separately for each market segment.

Trane stated that large increases in energy efficiency standards levels for commercial unitary air conditioners will cause users to repair their equipment rather than replace it, thereby decreasing shipments. (Public Workshop Tr., No. 2EE at p. 226) As noted above, the Department explicitly accounts for those customers that choose to repair their equipment rather than purchase a new system. Due to the increased equipment purchase price from higher efficiency standards, the shipments model estimates that some existing commercial unitary air conditioner customers, when faced with a replacement decision, will forego the purchase of a new piece of equipment and, instead, extend its normal life by repairing it. As a result, DOE estimated shipment projections under any standards case to be lower than those from the base case projection. Also, the shipments model forecasted that a greater number of existing customers would defer the purchase of a new system and extend the life of their equipment as the purchase price increased due to higher minimum efficiency standards.

c. Logit Probability Model

The Department used the logit probability-of-purchase model to estimate the impact of standards-induced price and features changes on customer decisions. The model accounts for customer responsiveness to total installed cost, operating costs, and business income to capture the effect of these three variables on future shipments. The Department developed a coefficient of elasticity for the responsiveness to these three factors for each of the market segments. The elasticity was established by calibrating equipment forecasts to historical shipments. This ensured that estimates were consistent with the recent history of commercial unitary air conditioner shipments, market structure, and customer preferences.

However, the Department understands that there are certain drawbacks to this method which include: (1) The need to forecast saturation of units in new and stock buildings; (2) the need to forecast building starts (although the AEO does provide readily available forecasts); and (3) the need to make assumptions concerning the lifetime of a unit to determine its retirement date. Concerning equipment saturation, the Department estimates that a maximum of ten percent of the total commercial floor space is eligible to receive equipment of the type covered by this rulemaking. Concerning building starts, the Department believes that unitary air conditioners would continue to be installed in the same types of buildings in which they are currently being used, and future equipment installations of commercial unitary air conditioners would not be preferentially installed in particular building types (*e.g.*, retail or office). Although the Department believes its estimates for equipment saturations and building starts are reasonable, the Department invites comments from interested parties on the reasonableness of these estimates. The equipment saturation and building start issues are addressed as Issues 12 and 13 under ''Issues on Which DOE Seeks Comment'' in section IV.E of this ANOPR.

Table II.17 summarizes the various inputs and sources of the commercial unitary air conditioner shipments model.

TABLE II.17.—SUMMARY OF SHIPMENTS MODEL INPUTS

Parameter	Data description
New Commercial Building Starts	DOE-Energy Information Administration, Annual Energy Outlook 2003.
Historical Commercial Building Starts	U.S. Census Bureau, Statistical Abstract of the United States: 2002.
Regular Replacement Market	Based on a survival function constructed from a Weibull distribution function normalized to produce a 15-year median lifetime. DOE based the 15-year median lifetime on data from the 1999 ASHRAE HVAC Applications Handbook.
Extra Repair Market	Same survival function as used for regular replacement market but with a six-year extended life.
Buildings Without an Air Conditioner	This is a function of shipments going to new commercial buildings and existing floor space.
Business Income	Building Owners and Managers Association (BOMA) International, Historical Experience Exchange Reports.

TABLE II.17.—SUMMARY OF SHIPMENTS MODEL INPUTS—Continued

Parameter	Data description
Total Installed Cost	Average values from LCC and PBP Analysis.
Operating Cost	Average values from LCC and PBP Analysis.
Elasticities	Developed by calibrating logit probability model to historical shipments.
Historical Shipments	U.S. Census Bureau, Current Industrial Reports, Refrigeration, Air Conditioning and Warm Air Heating Equipment (MA333M series 1970 through 2000).

Unlike the LCC Analysis, the shipments model does not use probability distributions of values for inputs. As noted in the above discussion of the NES spreadsheet model, the shipments model uses the same basic input data as the LCC model for energy use and cost of equipment, but uses shipment-weighted average values instead of probability distributions.

4. Preliminary Results

Tables II.18 and II.19 show the forecasted NES for the two primary equipment classes at each of the candidate standard levels. Note that in the case of both equipment classes, although the ASHRAE/IESNA Standard 90.1–1999 energy efficiency levels allow for four additional years of energy savings over the other standards cases, the amount is not great enough to offset the additional energy savings realized from adopting more stringent standards.

TABLE II.18.—SUMMARY OF CUMULATIVE NES IMPACTS (QUADS) THROUGH THE YEAR 2035 FOR ≥65,000 TO <135,000 BTU/H COMMERCIAL AIR CONDITIONERS

Candidate standard level	Effective date of standard	NES (quads)
ASHRAE 90.1—1999	2004	0.31
10.5 EER	2008	0.39
11.0 EER	2008	0.70
11.5 EER	2008	0.98
12.0 EER	2008	1.08

TABLE II.19.—SUMMARY OF CUMULATIVE NES IMPACTS (QUADS) THROUGH THE YEAR 2035 FOR ≥135,000 TO <240,000 BTU/H COMMERCIAL AIR CONDITIONERS

Candidate standard level	Effective date of standard	NES (quads)
ASHRAE 90.1—1999	2004	0.20
10.0 EER	2008	0.31
10.5 EER	2008	0.53
11.0 EER	2008	0.79
11.5 EER	2008	1.02
12.0 EER	2008	1.09

Tables II.20 and II.21 show the national NPVs for the two primary equipment classes for each of the candidate standard levels evaluated at discount rates of three-percent and seven-percent real per OMB's guidelines contained in *Circular A–4, Regulatory Analysis,* September 17, 2003. Based on the use of a seven-percent real discount rate, note that the NPV increases with the stringency of the standard level until the 12.0 EER standards case. Although the 12.0 EER standards case provides additional operating cost savings, the higher equipment purchase costs incurred under the standard result in an NPV that is lower than that realized under the 11.5 EER standards case. Use of a three-percent discount rate, as called for by OMB guidelines, increases both future equipment purchase costs and operating cost savings. But because future annual operating cost savings in latter years grow at a faster rate than annual equipment purchase costs, use of a three-percent discount rate dramatically increases the NPV at all standard levels for both equipment classes. For example, in the 11.5 EER standard level scenario for the ≥65,000 Btu/h to <135,000 Btu/h commercial unitary air conditioning equipment class, the $1.08 billion NPV based on a seven-percent discount rate becomes $3.06 billion under a three-percent discount rate. Chapter 10 of the ANOPR TSD also provides the full set of NPV results.

TABLE II.20.—SUMMARY OF CUMULATIVE NET PRESENT VALUE IMPACTS (IN BILLION 2001 DOLLARS) FOR ≥65,000 TO <135,000 BTU/H COMMERCIAL AIR CONDITIONERS CALCULATED WITH A SEVEN-PERCENT AND THREE-PERCENT REAL DISCOUNT RATE

Candidate standard level	Effective date of standard	NPV (billion 2001$)	
		7% discount rate	3% discount rate
ASHRAE 90.1–1999	2004	0.52	1.25
10.5 EER	2008	0.57	1.52
11.0 EER	2008	0.93	2.53
11.5 EER	2008	1.08	3.06
12.0 EER	2008	1.02	3.05

TABLE II.21.—SUMMARY OF CUMULATIVE NET PRESENT VALUE IMPACTS (IN BILLION 2001 DOLLARS) FOR ≥135,000 TO <240,000 BTU/H COMMERCIAL AIR CONDITIONERS CALCULATED WITH A SEVEN-PERCENT AND THREE-PERCENT REAL DISCOUNT RATE

Candidate standard level	Effective date of standard	NPV (billion 2001$)	
		7% discount rate	3% discount rate
ASHRAE 90.1–1999	2004	0.38	0.90
10.0 EER	2008	0.51	1.33
10.5 EER	2008	0.83	2.19
11.0 EER	2008	1.12	3.02
11.5 EER	2008	1.24	3.44
12.0 EER	2008	1.20	3.44

The engineering analysis, section II.C of the ANOPR, established a maximum technologically feasible (*i.e.*, ''max tech'') efficiency level of 12.0 EER. However, the engineering analysis also described a process (to be used for the NOPR) to ascertain whether the max tech level is actually greater than 12 EER. In anticipation that a greater max tech level could exist beyond 12.0 EER, the Department ran a sensitivity analysis to determine the effect on NES and NPV of a max tech efficiency level greater than 12.0 EER. For purposes of conducting the sensitivity analysis, the Department assumed that the max tech efficiency level would be 2 EER rating points beyond a given candidate standard level. This means that under the ASHRAE/IESNA Standard 90.1–1999 and 10.0 EER standards cases, the max tech level remains unchanged at 12.0 EER. But for all other standards cases, the max tech level is greater than 12.0 EER (*i.e.*, 12.5 EER for the 10.5 EER standards case, 13.0 EER for the 11.0 EER standards case, 13.5 EER for the 11.5 EER standards case, and 14.0 EER for the 12.0 EER standards case). Although under these standards cases the max tech level is allowed to go beyond 12.0 EER, equipment with efficiencies equal to the max tech level are assumed to be gradually phased in over time. As a result, the forecasted efficiency trends for these candidate standards are not very different from those developed with a max tech level of 12.0 EER. As a result, only the NES and NPV results for the 11.5 EER and 12.0 EER standards cases are significantly different from those results based on a max tech level of 12.0 EER. For more details on the NES and NPV results for the max tech sensitivity analysis, refer to subsection 10.4.5 of the ANOPR TSD.

H. LCC Sub-Group Analysis

The LCC sub-group analysis evaluates impacts on identifiable groups of customers, such as customers of different business types, who may be disproportionately affected by any national energy efficiency standard level. The Department will accomplish this, in part, by analyzing the LCC and PBPs for those customers that fall into those identifiable groups.

Also, the Department plans to evaluate variations in energy prices and variations in energy use that might affect the NPV of a standard to customer sub-populations. To the extent possible, the Department will get estimates of the variability of each input parameter and consider this variability in its calculation of customer impacts. Variations in energy use for a particular equipment type depend on factors such as climate, building type, and type of business. The Department plans to perform sensitivity analyses to consider how differences in energy use will affect sub-groups of customers.

The Department will then determine the effect on customer sub-groups using the LCC spreadsheet model. The standard LCC analysis includes various commercial building types that use unitary air conditioners. Where different data points are input to the spreadsheet model, the Department can analyze the LCC for any sub-group, such as office buildings in the U.S., by sampling only that sub-group. For more detail on the LCC sub-group analysis, refer to Chapter 11 of the ANOPR TSD.

The Department will be especially sensitive to purchase price increases (''first cost'' increases) to avoid negative impacts on identifiable population groups such as small businesses (*i.e.*, those with low annual revenues) which may not be able to afford a significant increase in the price of commercial unitary air conditioning equipment. Increased first costs to commercial customers which result from standards are especially important to smaller businesses because this group is most sensitive to price increases. For these types of customers, an increase in first cost for a piece of unitary air conditioning equipment might preclude the purchase of a new model of that equipment. As a result, some commercial customers may keep a unitary air conditioner past its anticipated useful life. An older unitary air conditioner is generally less efficient than a new one and its efficiency may further deteriorate if it keeps operating beyond that useful life. Further, an increase in first cost might altogether preclude the purchase and use of new equipment and potentially result in a great loss of utility.

Although the Department does not know the actual business income and annual revenues for the buildings analyzed in the LCC analysis, the Department will attempt to identify a building characteristic that correlates to annual income (*e.g.*, floor space). If a characteristic can be found, the Department will be able to perform sub-group analyses on smaller businesses. If the Department cannot identify a building characteristic that correlates with income, then the Department may not be able to perform sub-group analyses on smaller businesses. The issue of business income and how it might relate to a particular building characteristic is addressed as Issue 14 under ''Issues on Which DOE Seeks Comment'' in section IV.E of this ANOPR.

The ACEEE stated that a sub-group analysis is unnecessary, stating that analyzing customer sub-groups will lead to an analytical quagmire. (ACEEE, No. 10 at p. 11) The Department understands ACEEE's concerns because the LCC analysis of numerous sub-groups could require an inordinate amount of time and resources. However, as long as there are valid reasons for analyzing certain sub-groups, such as those businesses that may be affected more severely than the general population by increases in purchase

price, the Department will analyze the LCC impacts on those sub-groups.

I. Manufacturer Impact Analysis

The purpose of the manufacturer analysis is to identify the likely impacts of efficiency standards on manufacturers. Consistent with the policies outlined in the Department's Process Rule, 10 CFR Part 430, Subpart C, Appendix A, the Department will analyze the impact of standards on manufacturers with substantial input from manufacturers and other interested parties. The use of quantitative models will be supplemented by qualitative assessments by industry experts.

The Department intends to conduct the manufacturer impact analysis in three phases, and further tailor the analytical framework based on stakeholder comments. In Phase I, an industry profile is created to characterize the industry, and identify important issues that require consideration. In Phase II, an industry cash flow model and an interview questionnaire are prepared to guide subsequent discussions. In Phase III, manufacturers are interviewed, and the impacts of standards are assessed both quantitatively and qualitatively. First, industry and sub-group cash flow and net present value are assessed through use of the government regulatory impact model (GRIM). Second, impacts on competition, manufacturing capacity, employment, and regulatory burden are assessed based on manufacturer interview feedback and discussions. For more detail on the manufacturer impact analysis, refer to Chapter 12 of the ANOPR TSD.

1. Sources of Information for the Manufacturer Impact Analysis

Many of the analyses described above provide important information concerning the manufacturer impact analysis. Such information includes manufacturing costs (section II.C), shipments forecasts (section II.G.3), and price forecasts (section II.E). The Department supplemented this information with information gathered during interviews with manufacturers. The interview process has a key role in the manufacturer impact analysis because it allows interested parties to privately express their views on important issues, and allows DOE to consider confidential or sensitive information in the rulemaking decision.

The Department intends to conduct detailed interviews with as many manufacturers as necessary to gain insight into the range of potential impacts of standards. Typically during the interviews, DOE solicits information on the possible impacts of potential efficiency levels on sales, direct employment, capital assets, and industry competitiveness. Both qualitative and quantitative information is valuable. The Department intends to schedule interviews well in advance to provide every opportunity for key individuals to be available for comment. Although a written response to a questionnaire would otherwise be acceptable, DOE prefers an interactive interview process because it helps clarify responses and identify additional issues.

Before the interviews, the Department will prepare and distribute to the manufacturers estimates of the financial parameters that it plans to use in the manufacturer impact analysis. During the interviews, the Department will seek comment and suggestions regarding the values selected for those parameters.

The Department will ask interview participants to give, either in writing or orally, notice of any confidential information that is being provided. The Department will consider all relevant information in its decision-making process. However, DOE will not make confidential information available in the public record. The Department also will ask participants to identify all information that they wish to have included in the public record and whether they want it to be presented with, or without, attribution.

The Department will review the results of the interviews and prepare a summary of the major issues and outcomes. For more detail on the methodology used in the manufacturer impact analysis, refer to section 12.2 of the ANOPR TSD.

2. Industry Cash Flow Analysis

The industry cash flow analysis relies primarily on the Government Regulatory Impact Model (GRIM). The Department uses the GRIM to analyze the financial impacts of more-stringent energy efficiency standards on the industry.

The GRIM analysis uses several factors to determine annual cash flows beginning with the first public announcement of a new standard and for the several years after its implementation: Annual expected revenues; manufacturer costs such as costs of sales, selling, and general administration costs; taxes; and capital expenditures related to depreciation, new standards, and maintenance. The Department compares the results against baseline projections that involve no new standards. The financial impact of new standards is the difference between the two sets of discounted annual cash flows. Other performance metrics, such as return on invested capital, also are available from the GRIM. For more information on the industry cash flow analysis, refer to subsection 12.2.2.1 of the ANOPR TSD.

3. Manufacturer Sub-Group Analysis

Industry cost estimates are not adequate to assess differential effects among sub-groups of manufacturers. For example, there could be greater negative effects on smaller manufacturers, niche players, or manufacturers exhibiting a cost structure that differs largely from the industry average. Ideally, the Department would consider the impact on every firm individually; however, it typically uses the results of the industry characterization to group manufacturers exhibiting similar characteristics.

During the interview process, DOE will discuss the potential sub-groups and sub-group members that it has identified for the analysis. The Department will encourage the manufacturers to suggest what sub-groups or characteristics are most appropriate for the analysis. For more detail on the manufacturer sub-group analysis, refer to subsection 12.2.3 the ANOPR TSD.

4. Competitive Impacts Assessment

The Department must examine whether any lessening of competition is likely to result if a standard is set above the levels established in the ASHRAE/IESNA Standard 90.1–1999 and the Attorney General must determine the impacts, if any, of any lessening of competition. (42 U.S.C. 6313(6)(B)(i)(V)) The Department will make a determined effort to gather and report firm-specific financial information and impacts. The competitive analysis will focus on assessing the impacts to smaller manufacturers. The Department will base the assessment on manufacturing cost data and on information collected from interviews with manufacturers. The manufacturer interviews will focus on gathering information that will help in assessing asymmetrical cost increases to some manufacturers, increased proportions of fixed costs that could potentially increase business risks, and potential barriers to market entry (*e.g.*, proprietary technologies).

5. Cumulative Regulatory Burden

The Department recognizes and seeks to mitigate the overlapping effects on manufacturers of amended DOE standards and other regulatory actions affecting the same equipment or companies. See the Department's Process Rule, 10 CFR Part 430, Subpart C, Appendix A, sections 4(d)(7)(ii) and (vi), and 5(e)(3)(i)(B).

The Department understands that the phaseout in 2010 of R–22 refrigerant may occur shortly after the effective date of any new standards for commercial unitary air-conditioning equipment. Two refrigerants, R–410a and R–407c, are currently under consideration as substitutes for R–22. In either case, the Department understands that there may be additional capital conversion and production conversion costs associated with the phaseout. The firms that manufacture the commercial equipment, for the most part, also manufacture residential central air conditioners and will face that conversion expense in 2010.

J. Utility Impact Analysis

To estimate the effects of candidate commercial unitary air conditioner standard levels on the electric utility industry, the Department intends to use a variant of DOE/EIA's National Energy Modeling System (NEMS).[3] The DOE/EIA used this model to produce the Annual *Energy Outlook.* The Department will use a variant known as NEMS-Building Technologies (BT) to provide key inputs to the analysis. The utility impact analysis is a comparison between model results for the base case and candidate standards cases. The analysis will consist of forecasted differences between the base and standards cases for electricity generation, installed capacity, sales, and prices. Because the Department attempts to use a variant of the latest version of NEMS, the NOPR analyses will use the most recently available version of NEMS, which in all likelihood will be the version used to generate the *AEO 2004.*

The use of NEMS for the utility analysis offers several advantages. As the official DOE energy forecasting model, it relies on a set of assumptions that are transparent and have received wide exposure and commentary. This model allows an estimate of the interactions between the various energy supply and demand sectors and the economy as a whole. The utility analysis will report the changes in installed capacity and generation by fuel type for each trial standard level, as well as changes in electricity sales to the commercial sector.

The Department conducts the utility analysis as a policy deviation from the AEO, applying the same basic set of assumptions. For example, the utility analysis uses the operating characteristics (*e.g.*, energy conversion efficiency, emissions rates) of future electricity generating plants and the prospects for natural gas supply as specified in the AEO reference case.

The Department also will explore deviations from some of the reference case assumptions to represent alternative futures. Two alternative scenarios use the high and low economic growth cases of the AEO. The AEO reference case projects that the U.S. economy, as measured by gross domestic product (GDP), will grow at an average rate of three percent from 2001 to 2025. The high economic growth case assumes higher projected growth rates for population, labor force, and labor productivity, resulting in lower predicted inflation and interest rates relative to the reference case and higher overall aggregate economic growth. The opposite is true for the low-growth case. While supply-side growth determinants are varied in these cases, AEO assumes the same reference case energy prices for all three economic growth cases. Different economic growth scenarios will affect the rate of growth of electricity demand.

This model provides reference case load shapes for several end uses by census division, including commercial space cooling. The Department uses predicted growth in demand for each end use to project the total electric system load growth for each region, which in turn DOE uses to predict the necessary additions to capacity. The NEMS–BT model accounts for the implementation of efficiency standards by decreasing the value of certain variables in the appropriate reference case load shape. The Department determines the amount of decrease in a variable by using data for the per-unit energy savings developed in the LCC and PBP analyses and the shipments forecast developed for the NES analysis. For more detail on the utility impact analysis, refer to Chapter 13 of the ANOPR TSD.

The Southern Company stated that in conducting the utility analysis, it is important to consider the effect on utilities from changes that affect load factor and peak demand. (Public Workshop Tr., No. 2EE at p. 246) The Department recognizes the Southern Company's concerns, and because the predicted reduction in capacity additions is very sensitive to the peak load impacts of the standard, the Department will also use the hourly load data from the building simulations to provide an independent estimate of the total system load reduction that results from a given trial standard level.

Because the current AEO (*AEO 2003*) version of NEMS forecasts only to the year 2025, DOE must extrapolate results to 2035. The Department will use the approach which the EIA uses to forecast fuel prices for the Federal Energy Management Program (FEMP).[4] The Federal Energy Management Program uses these prices to estimate LCC of federal equipment procurements. For petroleum products, FEMP uses the average growth rate for the world oil price over the years 2010 to 2025, in combination with the refinery and distribution markups from the year 2025, to determine the regional price forecasts. Similarly, FEMP derives natural gas prices from an average growth rate figure in combination with regional price margins from the year 2025.

Results of the analysis will include changes in commercial electricity sales, and installed capacity and generation by fuel type, for each trial standard level, in five-year forecasted increments extrapolated to the year 2035. The Natural Resources Defense Council stated that increases in the commercial unitary air conditioner standards will protect lives by reducing electricity blackouts. (NRDC, No. 6 at p. 5) Although the Department recognizes the possibility that a reduction in installed capacity could reduce the likelihood of blackouts, the Department does not intend to correlate reductions in installed capacity to possible reductions in electricity outages.

K. Environmental Assessment

The Department will conduct an assessment of the impacts of candidate commercial unitary air conditioner standard levels on certain environmental indicators using NEMS–BT to provide key inputs to the analysis. Results of the environmental assessment are similar to those provided in the AEO. Because the Department attempts to use a variant of the latest version of NEMS, the analyses conducted for the NOPR will use the most recently available version of NEMS, which in all likelihood will be the version used to generate the AEO 2004.

[3] For more information on NEMS, refer to the U.S. Department of Energy, Energy Information Administration documentation. A useful summary is *National Energy Modeling System: An Overview 2000,* DOE/EIA–0581(2000), March, 2000. DOE/EIA approves use of the name NEMS to describe only an official version of the model without any modification to code or data. Because this analysis entails some minor code modifications and the model is run under various policy scenarios that are variations on DOE/EIA assumptions, DOE refers to it by the name NEMS–BT (BT is DOE's Building Technologies program that performs this work).

[4] Memorandum from the Office of Integrated Analysis and Forecasting, Energy Information Administration, to the Federal Energy Management Program Office, dated January 23, 2003, ''Energy Price Projections for Federal Life Cycle Cost Analysis.''

The Department intends the environmental assessment to provide emissions results to policymakers and stakeholders, and to fulfill relevant legal requirements concerning the evaluation of environmental effects of new rules. The environmental assessment considers only two pollutants, sulfur dioxide (SO_2) and nitrogen oxides (NO_X), and one emission, carbon. The only form of carbon NEMS–BT tracks is carbon dioxide (CO_2), so the carbon discussed in this report is only in the form of CO_2. For each of the standard levels, DOE will calculate total undiscounted and discounted emissions using NEMS–BT and will use external analysis as needed.

The Department will conduct the environmental assessment as a policy deviation from the AEO applying the same basic set of assumptions. For example, the emissions characteristics of an electricity generating plant will be exactly those used in AEO. The Southern Company stated that the environmental impacts calculated from a standards increase must consider other factors that may also be affecting power plant emissions. (Public Workshop Tr., No. 2EE at p. 254) Forecasts conducted with NEMS–BT also take into consideration the supply-side and demand-side effects on the electric utility industry. Thus, the Department's analysis takes into account any factors affecting the type of electricity generation and, in turn, the type and amount of airborne emissions the utility industry generates.

The NEMS–BT model tracks carbon emissions using a detailed carbon module. This gives good results because of its broad coverage of all sectors and inclusion of interactive effects. Past experience with carbon results from NEMS suggests that emissions estimates are somewhat lower than emissions estimates based on simple average factors. One of the reasons for this divergence is that NEMS tends to predict that conservation displaces renewable generating capacity in the out years. On the whole, NEMS–BT provides carbon emissions results of reasonable accuracy, at a level consistent with other Federal published results.

The NEMS–BT model reports the two airborne pollutant emissions that DOE has reported in past analyses, SO_2 and NO_X. The Clean Air Act Amendments of 1990 set an SO_2 emissions cap on all power generation. The attainment of this target, however, is flexible among generators through the use of emissions allowances and tradable permits. The NEMS–BT model includes a module for SO_2 allowance trading and delivers a forecast of SO_2 allowance prices. Accurate simulation of SO_2 trading tends to imply that physical emissions effects will be zero, as long as emissions are at the ceiling. This fact has caused considerable confusion in the past. However, there is an SO_2 benefit from conservation in the form of a lower allowance price as a result of additional allowances from this rule, and, if it is big enough to be calculable by NEMS–BT, DOE will report this value. The NEMS–BT model also has an algorithm for estimating NO_X emissions from power generation. Two recent regulatory actions proposed by the EPA regarding regulations and guidelines for best available retrofit technology determinations and the reduction of interstate transport of fine particulate matter and ozone are tending towards further NO_X reductions and likely to an eventual emissions cap on nation-wide NO_X. 69 FR 25184 (May 5, 2004) and 69 FR 32684 (June 10, 2004). As with SO_2 emissions, a cap on NO_X emissions will likely result in no physical emissions effects from equipment efficiency standards.

The results for the environmental assessment are similar to a complete NEMS run as published in the AEO. These include power sector emissions for SO_2, NO_X, and carbon, and SO_2 prices, in five-year forecasted increments extrapolated to the year 2035. The Department reports the outcome of the analysis for each trial standard level as a deviation from the AEO reference cases. The Natural Resources Defense Council stated that increases in the commercial unitary air conditioner standards will protect lives by reducing airborne emissions. (NRDC, No. 6 at p. 5) Although the Department recognizes the possibility that a reduction in airborne emissions could result in improved health benefits, the Department has not correlated reductions in installed capacity to possible improvements in public health for appliance standards rulemakings. The Department requests data from stakeholders that identify specific health benefits from reductions in installed generation capacity. For more detail on the environmental assessment, refer to the environmental assessment report in Chapter 14 of the ANOPR TSD. Also, see ''Issues on Which DOE Seeks Comment'' in section IV.E of this ANOPR.''

L. Employment Impact Analysis

The Process Rule includes employment impacts among the factors to be considered in selecting a proposed standard. The Department usually would not issue any proposed standard level that would cause significant plant closures or losses of domestic employment. See the Department's Process Rule, 10 CFR Part 430, Subpart C, Appendix A, sections 4.(d)(7)(ii) and (vi), and 10.

The Department estimates the impacts of standards on employment for equipment manufacturers, relevant service industries, energy suppliers, and the economy in general. The estimates cover both the indirect and direct effects on employment. Direct employment impacts would result if standards led to a change in the number of employees at manufacturing plants and related supply and service firms. The discussion of the manufacturer sub-group analysis in section II.I.3 of this ANOPR covers estimates of the direct effects on employment.

Indirect impacts are impacts on the national economy other than in the manufacturing sector being regulated. Indirect impacts may result both from expenditures shifting among goods (substitution effect) and changes in income which lead to a change in overall expenditure levels (income effect). The Department defines indirect employment impacts from standards as net jobs eliminated or created in the general economy as a result of increased spending on the purchase price of equipment and reduced customer spending on energy.

The Department expects new commercial unitary air conditioner standards to increase the total installed cost of equipment (customer purchase price plus sales tax, and installation). It expects the new standards to decrease energy consumption, and therefore to reduce customer expenditures for energy. Over time, the energy savings will pay back the increased total installed cost. Customers that benefit from the savings in energy expenditures may spend those savings on new commercial investments and other items. Using an input/output model of the U.S. economy, this analysis seeks to estimate the effects on different sectors and the net impact on jobs. The Department will estimate national impacts for major sectors of the U.S. economy in the NOPR. Public and commercially available data sources and software will be used to estimate employment impacts. The Department will make all methods and documentation available for review.

In recent energy efficiency standards rulemakings, the Department has used the Impact of Building Energy Efficiency Programs (IMBUILD) spreadsheet model to analyze indirect employment impacts. The Department's Building Technologies program office developed

IMBUILD, which is a special-purpose version of the Impact Analysis for Planning (IMPLAN) national input/output model. IMPLAN specifically estimates the employment and income effects of building energy technologies. The IMBUILD model is an economic analysis system that focuses on those sectors most relevant to buildings, and characterizes the interconnections among 35 sectors as national input/output matrices using data from the Bureau of Labor Statistics (BLS). The IMBUILD model estimates changes in employment, industry output, and wage income in the overall U.S. economy resulting from changes in expenditures in the various sectors of the economy. Changes in expenditures due to commercial air conditioning standards are modeled by IMBUILD as changes to economic flows (*e.g.*, increased equipment prices and increased commercial sector investment). The economic flow changes provide IMBUILD with the means to estimate the net national effect on employment by sector.

While ACEEE generally supports the inclusion of a net national employment impacts analysis, it stated that any model or tool used to estimate employment impacts must be robust and sensitive enough to reveal effects as small as those that can be foreseen. ACEEE commented that DOE must show that any direct employment impacts differ significantly from productivity-related employment changes. (ACEEE, No. 10 at p. 15) The IMBUILD model estimates standards-induced impacts on the economy while holding constant all other economic factors that can affect national employment (such as recessions, government stimulus packages, and government budget deficits). While this approach to estimating employment impacts cannot determine the impacts due to small changes (such as productivity gains) on any particular industry, it does provide an approximation of the impact that equipment standards have on employment, barring any significant changes to the U.S. economy. Nevertheless, increases or decreases in the net demand for labor in the economy estimated by the input/output model due to commercial unitary air conditioners and heat pump standards are likely to be very small relative to total national employment. For the following reasons, it is doubtful that even modest changes in employment will be predicted in the NOPR.

- Although unemployment has increased over the past few years, it is still at a relatively low rate. If unemployment remains low during the period when amended energy efficiency standards go into effect, it is unlikely that the efficiency standards alone would cause any change in national employment levels;
- Neither the BLS data nor the input/output model used by DOE include the quality or wage level of the jobs. The losses or gains from any potential employment change might be offset if job quality and pay also change; and
- The net benefits or losses from potential employment changes are a result of the estimated net present value of benefits or losses that are likely to result from amended commercial unitary air conditioner and heat pump energy efficiency standards. It may not be appropriate to separately identify and consider any employment impacts beyond the calculation of NPV.

Taking into consideration these legitimate concerns regarding the interpretation and use of the employment impact analysis, the Department expects that any energy efficiency standards for commercial unitary air conditioners and heat pumps are likely to produce employment benefits that are sufficient to offset fully any adverse impacts on employment in the commercial air conditioning equipment or energy industries. Employment impact analyses for products that have recently gone through a standards rulemaking for energy efficiency, such as residential water heaters and clothes washers, have demonstrated that losses in the appliance and energy industries have been offset by gains in other sectors of the economy.

Although the Department intends on using IMBUILD for its analysis of employment impacts, the Department welcomes any input on tools that might be better than IMBUILD. For more information on the net national employment impacts analysis, refer to Chapter 14 of the ANOPR TSD.

M. Regulatory Impact Analysis

The Department will prepare a draft regulatory impact analysis under Executive Order 12866, ''Regulatory Planning and Review,'' (58 FR 51735 (October 4, 1993)) which will be subject to review under the Executive Order by the Office of Information and Regulatory Affairs (OIRA).

As part of the regulatory analysis, the Department will identify and seek to mitigate the overlapping effects on manufacturers of revised DOE standards and other regulatory actions affecting the same equipment. Through manufacturer interviews and literature searches, the Department will compile information on burdens from existing and impending regulations affecting commercial unitary air conditioners (*e.g.*, HCFC refrigerant phaseout) and other equipment (*e.g.*, non-unitary commercial air conditioners). Northeast Energy Efficiency Partnerships (NEEP) stated that existing incentive programs have demonstrated that commercial consumers need modest incentives to select equipment with efficiencies that are greater than the minimum standard requirements in ASHRAE Standard 90.1–1999. (NEEP, No. 8 at p. 3) The Department takes note of NEEP's comment and intends to address its concerns in the regulatory impact analysis discussion. The Department also seeks input from other stakeholders regarding other regulations that it should consider.

The NOPR will include a complete quantitative analysis of alternatives to the proposed energy conservation standards. The Department plans to use the NES spreadsheet model (as discussed earlier in the section on the national impact analysis) to calculate the NES and the NPV corresponding to specified alternatives to the proposed conservation standards. For more information on the regulatory impact analysis, refer to the regulatory impact analysis report in Chapter 16 of the ANOPR TSD.

III. Candidate Energy Conservation Standards Levels

The Process Rule requires the Department to specify candidate standards levels in the ANOPR, but not to propose a particular standard. 10 CFR Part 430, Subpart C, Appendix A, 4(c)(1). These candidate levels appear in Tables II.18 through II.21 of today's ANOPR. The Department intends to review the public comments received during the public comment period following the ANOPR public meeting and to update the analyses appropriately for each equipment class, before issuing the NOPR.

Also, the Department requests comments from interested parties about the phaseout of R–22 refrigerant, and has identified it as Issue 15 under ''Issues on Which DOE Seeks Comment'' in section IV.E. of this ANOPR.

IV. Public Participation

A. Attendance at Public Meeting

The time and date of the public meeting are listed in the DATES section at the beginning of this notice of proposed rulemaking. The public meeting will be held at the U.S. Department of Energy, Forrestal Building, Room 1E–245, 1000 Independence Avenue, SW.,

Washington, DC, 20585. Those stakeholders who want to attend the public meeting should notify Ms. Brenda Edwards-Jones at (202) 586–2945. Foreign nationals visiting DOE Headquarters are subject to advance security screening procedures, requiring a 30-day advance notice. A foreign national who wishes to participate in the meeting, must tell DOE of this fact as soon as possible by contacting Ms. Brenda Edwards-Jones to initiate the necessary procedures.

B. Procedure for Submitting Requests To Speak

Any person who has an interest in today's notice, or who is a representative of a group or class of persons that has an interest in these issues, may request an opportunity to make an oral presentation. Hand-deliver requests to speak, along with a computer diskette or CD in WordPerfect, Microsoft Word, PDF, or text (ASCII) file format, to the address shown at the beginning of this advance notice of proposed rulemaking between the hours of 9 a.m. and 4 p.m., Monday through Friday, except Federal holidays. They may be submitted by mail or e-mail to: *Brenda.Edwards-Jones@ee.doe.gov.*

Persons requesting to speak should briefly describe the nature of their interest in this rulemaking and provide a telephone number for contact. The Department requests persons selected to be heard to submit an advance copy of their statements at least two weeks before the public meeting. At its discretion, DOE may permit persons who cannot supply an advance copy of their statement to participate, if that person has made advance alternative arrangements with the Building Technologies Program. The request to give an oral presentation should ask for such alternative arrangements.

C. Conduct of Public Meeting

The Department will designate a DOE official to preside at the public meeting and may also use a professional facilitator to aid discussion. The meeting will not be a judicial or evidentiary-type public hearing, but DOE will conduct it in accordance with 5 U.S.C. 553 and section 336 of EPCA. (42 U.S.C. 6306) A court reporter will be present to record the transcript of the proceedings. The Department reserves the right to schedule the order of presentations and to establish the procedures governing the conduct of the public meeting. After the public meeting, interested parties may submit further comments on the proceedings as well as on any aspect of the rulemaking until the end of the comment period.

The public meeting will be conducted in an informal, conference style. The Department will present summaries of comments received before the public meeting, allow time for presentations by participants, and encourage all interested parties to share their views on issues affecting this rulemaking. Each participant will be allowed to make a prepared general statement (within time limits determined by DOE), before the discussion of specific topics. The Department will permit other participants to comment briefly on any general statements.

At the end of all prepared statements on a topic, DOE will permit participants to clarify their statements briefly and comment on statements made by others. Participants should be prepared to answer questions by DOE and by other participants concerning these issues. Department representatives may also ask questions of participants concerning other matters relevant to the public meeting. The official conducting the public meeting will accept additional comments or questions from those attending, as time permits. The presiding official will announce any further procedural rules or modification of the above procedures that may be needed for the proper conduct of the public meeting.

The Department will make the entire record of this rulemaking, including the transcript from the public meeting, available for inspection at the U.S. Department of Energy, Forrestal Building, Room 1J–018 (Resource Room of the Building Technologies Program), 1000 Independence Avenue, SW., Washington, DC, (202) 586–9127, between 9 a.m. and 4 p.m., Monday through Friday, except Federal holidays. Any person may buy a copy of the transcript from the transcribing reporter.

D. Submission of Comments

The Department will accept comments, data, and information regarding the ANOPR before or after the public meeting, but no later than the date provided at the beginning of this advance notice of proposed rulemaking. Please submit comments, data, and information electronically. Send them to the following e-mail address: *commercialaircon ditioner.anopr@ee.doe.gov.* Submit electronic comments in WordPerfect, Microsoft Word, PDF, or text (ASCII) file format and avoid the use of special characters or any form of encryption. Comments in electronic format should be identified by the docket number EE-RM/STD–01–375, and wherever possible carry the electronic signature of the author. Absent an electronic signature, comments submitted electronically must be followed and authenticated by submitting the signed original paper document. No telefacsimiles (faxes) will be accepted.

Pursuant to 10 CFR 1004.11, any person submitting information that he or she believes to be confidential and exempt by law from public disclosure should submit two copies: One copy of the document including all the information believed to be confidential, and one copy of the document with the information believed to be confidential deleted. The Department of Energy will make its own determination about the confidential status of the information and treat it according to its determination.

Factors of interest to the Department when evaluating requests to treat submitted information as confidential include: (1) A description of the items, (2) whether and why such items are customarily treated as confidential within the industry, (3) whether the information is generally known by or available from other sources, (4) whether the information has previously been made available to others without obligation concerning its confidentiality, (5) an explanation of the competitive injury to the submitting person which would result from public disclosure, (6) when such information might lose its confidential character due to the passage of time, and (7) why disclosure of the information would be contrary to the public interest.

E. Issues on Which DOE Seeks Comment

The Department is particularly interested in receiving comments (including data) concerning:

1. Approaches to Analyses for Split Systems, Heat Pumps, and Niche Equipment

The Department assumes that the cost/efficiency relationship for commercial single-package unitary air-conditioning equipment in the ANOPR is similar to that of commercial split air-conditioning systems. Is this a reasonable assumption for the DOE to make in its approach to developing the cost/efficiency curves? (*See* section II.C.1 of this ANOPR for details.)

This ANOPR and the analyses detailed in the accompanying TSD address only commercial unitary air conditioning equipment. The Department proposes to address energy efficiency standards for commercial unitary heat pump equipment in a way that is consistent with the ASHRAE methodology used to set the ASHRAE/IESNA Standard 90.1–1999 levels for unitary air conditioning systems with

heat pump heating. The Department requests comments on this proposed approach. (*See* section II.C.1 of this ANOPR for details.)

The Department did not consider any niche equipment classes in the engineering analysis. Should the Department consider any niche classes of commercial unitary air conditioning equipment (*e.g.*, portable units and explosion-proof/hazardous-duty units) that would fall under the definitions of either small unitary air conditioner, large unitary air conditioner, small unitary heat pump, or large unitary heat pump, in section I.C.3. of this ANOPR, apart from these general classes of commercial unitary air-conditioning equipment?

2. Alternative Refrigerant Analysis

The Department based its alternative refrigerant analysis on the use of R–410a refrigerant. The Department concluded that the incremental manufacturing cost and efficiency relationship derived for equipment using R–22 refrigerant would not be substantially different for equipment using R–410a. The Department requests data concerning the incremental cost/efficiency relationship associated with the use of R–410a in commercial unitary air conditioners. Also, the Department requests stakeholders to identify and provide similar information for any other alternative refrigerants DOE should consider. (*See* section II.C.5 of this ANOPR for details.)

3. Candidate Standards Levels

The Department has identified candidate energy efficiency standards levels ranging from 10.0 to 12.0 EER. The Department seeks comments on these efficiency standards levels and any other alternatives it should consider. (*See* sections III. and II.G.4 of this ANOPR for details.)

4. Design-Option Analysis and Maximum Energy Efficiency Levels

Because there were no commercial unitary air conditioners that had efficiencies beyond 11.5 EER when the Department conducted its engineering analysis for commercial unitary air conditioners rated ≥65,000 Btu/h through <240,000 Btu/h, the Department had to rely on its design-option analysis modeling to estimate the manufacturing cost and efficiency relationship beyond 11.5 EER. The Department requests comments from stakeholders on: (1) Whether the design options presented in the engineering analysis accurately estimate cost and efficiency trends beyond 11.5 EER, (2) whether the Department's assumptions for evaluating a maximum technologically feasible design were appropriate, and (3) what other design options should the Department consider in its analysis.

Since the Department completed its engineering analysis in late 2002, several new commercial unitary air conditioners, with rated efficiency levels greater than 12.0 EER, have become available on the market. The Department requests comments from stakeholders on any commercial unitary air-conditioning equipment with rated efficiency levels above 12.0 EER. (See sections II.C.1.a and II.C.4 of this ANOPR for details.)

5. Industrial Buildings

The Department's analysis relies on simulations of electric loads in commercial buildings to determine the relative impact of the standard. The analysis is also intended to cover equipment installed in light-manufacturing buildings. Light-manufacturing buildings are those engaged in the process of making, assembling, altering, converting, fabricating, finishing, processing or treatment of a manufactured product utilizing a relatively clean and quiet process which does not include or generate significant objectionable or hazardous elements such as smoke, odor, vibration, water pollution or dust. As such, commercial unitary air-conditioning equipment covered under this rulemaking could serve to provide space conditioning to light-manufacturing buildings. If the electric load shapes and magnitudes, and in particular the degree of correlation between the hour of the peak air conditioning load and the hour of the peak building load, are substantially different for light-manufacturing buildings, a separate analysis for these buildings might be necessary. The Department seeks comments about whether adding light-manufacturing buildings to its analysis is necessary and what, if any, impact it would have on the results. (See sections II.D.1 and II.F.1.b.(2)(a) of this ANOPR for details.)

6. Economizer Performance

In its building simulation analysis, the Department assumed that the economizers operated flawlessly where economizer presence was indicated by CBECS data. This might result in some underestimation of the actual cooling loads in the buildings. Should the Department revise this assumption, and if so, what assumptions are appropriate? (See section II.D.1 of this ANOPR for details.)

7. Fan Energy Consumption

The Department included fan energy consumption as part of the total energy consumption of the commercial unitary air-conditioning equipment in the ANOPR analysis. This analysis includes fan energy consumption that occurs whenever the fan is in operation (*i.e.*, during cooling, heating, and ventilation). Should the Department revise this approach in the NOPR analysis, and if so, what approach is appropriate? (See section II.D.1 of this ANOPR for details.)

8. Equipment Markups

For purposes of deriving customer prices for more efficient equipment, the Department differentiated between a baseline markup and an incremental markup for wholesalers, general contractors, and mechanical contractors. The incremental markup covers only those expenses associated with a change in the manufacturer price and is used to derive the incremental change in customer equipment price due to higher EER levels. Because the incremental markup covers fewer expenses, it has a lower value than its corresponding baseline markup. Nevertheless, it is essential to identify all expenses the incremental markup should cover. Therefore, the Department seeks comments on whether more or fewer expenses should be covered by the wholesale, general contractor, and mechanical contractor incremental markups. (See section II.E.2 of this ANOPR for details.)

9. Hourly Based Electricity Prices

The Department's hourly based electricity price analysis uses extensive data to develop estimates of generation and coincident peak load savings due to the standard for each building in the sample. The Department enters these savings estimates into a customer price model to compute annual energy bill savings as an input to the LCC. The Department's price model is based on the avoided-cost methodologies traditionally used to value demand reduction programs. Should the Department consider price models other than those based on avoided-cost methodologies? (See section II.F.1.b.(2)(b) of this ANOPR for details.)

10. Forecasts of Electricity Prices

The Department has relied on EIA energy price forecasts, including the various EIA scenarios, to bound projected energy prices used in the standards analyses. The Department applied EIA's projected trend in national average electricity prices to each customer's marginal energy

expenses. Although the Department believes the EIA forecasts are the most credible projections available, the Department is open to using other sources of credible information. Are there alternative electricity price forecasts that are credible and warrant consideration by the Department? (See section II.F.1.b.(3) of this ANOPR for details.)

11. Equipment Lifetime

The Department based its equipment lifetime assumption on data from the 1999 *ASHRAE HVAC Applications Handbook,* which gives a median lifetime of 15 years for commercial unitary air conditioners. The Department found no other data to indicate a different median or mean lifetime for commercial unitary air conditioning equipment. The Department seeks data concerning whether a 15-year median lifetime is appropriate for commercial unitary air conditioners and heat pumps. (See section II.F.1.b.(6) of this ANOPR for details.)

12. Maximum Market Share of Commercial Unitary Air Conditioning Equipment

The shipments model uses a logit decision model to represent the probability that a new building will have unitary air conditioning equipment installed. Even if all eligible commercial customers decided to acquire a unitary air conditioner, there is still only a finite fraction of floor space that would contain the particular equipment covered by the standard (due, for example, to the climate, the building size or type, etc.). The Department estimates that the maximum fraction of floor space that is eligible to receive the unitary air conditioning equipment covered by the standard is about 10 percent for each equipment category. The Department seeks data to determine whether it should revise its estimate. (See section II.G.3.c of this ANOPR for details.)

13. Future Building Types Using Commercial Unitary Equipment

Future shipments of unitary air conditioning equipment depend in part on the rate of growth of commercial floor space. The Department uses the average growth rate for all commercial buildings as provided by AEO. The shipments model should cover the effects of any commercial unitary air conditioning equipment that is preferentially installed in particular types of buildings (*e.g.*, retail or office) and any growth rate of floor space for these building types that is substantially different from the average. The Department seeks comments concerning whether to base floor space growth rate on specific building types rather than the average growth rate. (See section II.G.3.c. of this ANOPR for details.)

14. Customer Sub-Groups

The Department has identified smaller businesses, as measured by annual revenue, as a possible sub-group in which to conduct a separate LCC analysis. Although the Department does not know the annual revenues for the businesses in the buildings analyzed in the LCC analysis, the Department hopes to identify a building characteristic that is an indicator of annual revenues. The Department seeks comments from interested parties on whether there is any building characteristic that correlates to business income. (See section II.H. of this ANOPR for details.)

15. Effective Date of New Standards and Phaseout Date of R–22 Refrigerant

For purposes of conducting the shipments and manufacturer impact analyses, should the Department assume that manufacturers will change over to a new refrigerant (R–410a) at the same time new standards levels become effective? (See section III. of this ANOPR for details.)

16. Independent Expert Third-Party Reviews

ARI and Lennox raised the following issues: (a) Sample of buildings, (b) BLAST simulation and CBECS data, (c) supply fan energy use while ventilating, and (d) incremental markups. (ARI, Nos. 14, 17, 18, and 19; Lennox, No. 15; and Memo to the File: Meeting with ARI/Lennox, March 12, 2003, No. 16) The Department engaged independent third-party experts to review the approaches, assumptions, data, and analytical methods used for the ANOPR analyses for these four issues. The results of these third-party reviews are available to interested parties on the Department's website at *http://www.eere.doe.gov/buildings/appliance_standards/ac_hp.html.* The Department seeks comments about each of these issues and the third-party review of these issues. (See sections I.A.5, II.D.1 and II.E.2 of this ANOPR and below discussion for more details.)

a. Sample of Buildings

The Department's economic analysis examined energy-use estimates in a sample of buildings from the EIA's CBECS database. The sample represents a diversity of cooling loads where commercial unitary air conditioning equipment is installed in six building types: assembly, education, food services, office, retail, and warehouse (non-refrigerated). Because of the complexity of this analysis, the Department also obtained an independent third-party expert review to ensure that the sample of buildings represented the operating conditions associated with the population of commercial unitary air conditioning equipment with rated cooling capacities of ≥65,000 Btu/h to <240,000 Btu/h. The Department seeks comments from interested parties about this third-party review.

b. Building Loads and System Thermodynamics Simulation and Commercial Buildings Energy Consumption Survey Estimates of Energy Use

The Department simulated load shapes for each of the above-sampled buildings at various efficiency levels by using the Building Loads and System Thermodynamics (BLAST) software. In doing so, the Department found that cooling energy use intensity (EUI) predicted by BLAST is higher than the cooling EUI estimated by CBECS for buildings with commercial unitary air conditioning equipment, although both the BLAST and CBECS calculations of energy end uses for cooling and ventilation are derived from modeled data. In view of these findings, the Department used a third party to examine the differences between the BLAST simulation EUI and the CBECS estimated EUI. The Department seeks comments from interested parties about the third-party review of the BLAST simulation and CBECS estimates of energy use. (See section II.D.1 of this ANOPR for details.)

c. Supply Fan Energy Use While Ventilating

The Department's analysis examines the total energy impact of commercial unitary air conditioning equipment on building energy consumption and therefore includes both the energy use and savings associated with the supply fan during non-cooling hours. The Department presumes that the fan is an integral component of a commercial unitary air conditioner and operates continuously to provide fresh air and air circulation at established ASHRAE Standard 62–1989 air quality levels when the building is occupied. The Department seeks comments from interested parties about the third-party review of fan energy use in the Department's ANOPR analysis. (See section II.D.1 of this ANOPR for details.)

d. Incremental Markups

To determine customer prices for more efficient commercial unitary air conditioning equipment, the ANOPR analysis addresses both the manufacturer's baseline markup and incremental markups for wholesalers, general contractors, and mechanical contractors. It addresses those overhead expenses that may vary with an increase in equipment efficiency for each step of the distribution channel, and in particular those overhead expenses that can be attributed to higher EER levels. The Department seeks comments from interested parties about the third-party review of incremental markups in the ANOPR analysis. (See section II.E.2 of this ANOPR for details.)

17. Effect of Income Taxes on Life-Cycle Cost

The Department did not include the effect of income taxes in the LCC analysis for this ANOPR because it believes the net impact of taxes on the LCC analysis depends upon how a firm's accounting procedures expense the purchase cost of commercial equipment and measure profitability. The Department requests comments as to whether DOE should perform such an analysis. The Department also requests information from interested parties on the number of firms that purchase commercial unitary air conditioning equipment and actually pay taxes, and for those that pay taxes, how the purchase of such equipment is expensed and subsequently depreciated over time. (See section II.F.1 of this ANOPR for details.)

18. Technologies That Affect Full- or Part-Load Performance

The Department understands that there are other technologies that operate under full- or part-load conditions and that can improve the net annual energy performance of a system, but which generally reduce the EER of commercial unitary air-conditioning equipment, or, at best, have no effect on EER. Such technologies include, for example, multiple compressors, economizers, inverter-driven variable-speed fans, and exhaust air enthalpy recovery devices. The Department did not examine such technologies because EPCA requires the commercial unitary air conditioners that are under consideration in this rulemaking meet certain energy levels measured in terms of EER. Moreover, EPCA establishes minimum EER levels for these air-cooled commercial unitary air conditioners and any amended national standard for that equipment must be more stringent—in other words, have an increased EER. Nevertheless, the Department understands that part-load and seasonal performance of a commercial unitary air conditioner is important because of the impact on national energy consumption. Therefore, the Department seeks comments and recommendations from interested stakeholders on how best to analyze the effects of those technologies that can reduce EER or are EER-neutral, and the implications both on national energy savings and consumer life cycle costs. (See section II.B of this ANOPR for details.)

19. Environmental Assessment

The Department recognizes the possibility that a reduction in airborne emissions may result from energy efficient commercial unitary air conditioners and heat pumps which, in turn, could result in improved health benefits. The Department has not correlated reductions in installed generation capacity to possible improvements in public health for this ANOPR. Nevertheless, the Department requests data from stakeholders which identify specific health benefits from reductions airborne emissions. (See section II.K of this ANOPR for details.)

20. Rebound Effect

As part of the building energy use and end-use load characterization, the Department did not take into account a rebound effect in determining the reduction in cooling and fan energy consumption due to higher EER levels. The rebound effect occurs when a piece of equipment that is made more efficient is used more intensively, so that the expected energy savings from the efficiency improvement do not fully materialize. The Department seeks comments on whether a rebound effect should be included in the determination of annual energy savings. If a rebound effect should be included, the Department seeks data on which to base the calculation of the rebound effect. (See section II.D.2 of this ANOPR for details.)

V. Regulatory Review and Procedural Requirements

This advance notice of proposed rulemaking was submitted for review to the Office of Information and Regulatory Affairs (OIRA) in the Office of Management and Budget under Executive Order 12866, ''Regulatory Planning and Review,'' 58 FR 51735 (October 4, 1993). If DOE later proposes amended energy conservation standards for certain air-cooled, electrically operated, unitary central air conditioners and heat pumps for commercial applications, the rulemaking would likely constitute a significant regulatory action, and DOE would prepare and submit to OIRA for review the assessment of costs and benefits required by section 6(a)(3) of the Executive Order. In addition, various other analyses and procedures may apply to such future rulemaking action, including those required by the National Environmental Policy Act, 42 U.S.C. 4321 *et seq.*; the Unfunded Mandates Act of 1995, Public Law 104–4; the Paperwork Reduction Act, 44 U.S.C. 3501 *et seq.*; the Regulatory Flexibility Act, 5 U.S.C. 601 *et seq.*; and certain other Executive Orders.

VI. Approval of the Office of the Secretary

The Secretary of Energy has approved publication of today's Advance Notice of Proposed Rulemaking.

Issued in Washington, DC, on July 13, 2004.

David K. Garman,

Assistant Secretary, Energy Efficiency and Renewable Energy.

[FR Doc. 04–16575 Filed 7–28–04; 8:45 am]

BILLING CODE 6450–01–U

Federal Register

Thursday,
July 29, 2004

Part V

Department of Energy

Office of Energy Efficiency and Renewable Energy

10 CFR Part 432

Energy Conservation Program: Test Procedures for Distribution Transformers; Proposed Rule

DEPARTMENT OF ENERGY

Office of Energy Efficiency and Renewable Energy

10 CFR Part 432

[Docket No. EE–TP–98–550]

RIN 1904–AA85

Energy Conservation Program: Test Procedures for Distribution Transformers

AGENCY: Office of Energy Efficiency and Renewable Energy, Department of Energy.

ACTION: Supplemental notice of proposed rulemaking and public meeting.

SUMMARY: The Department of Energy (DOE or the Department) previously published a notice of proposed rulemaking to adopt test procedures for measuring the energy efficiency of distribution transformers under the Energy Policy and Conservation Act (EPCA or the Act), definitions to delineate the products covered by the test procedures and provisions (including a sampling plan) for implementing the test procedures. The Department now proposes to adopt revised test procedures for distribution transformers, primarily based upon existing industry standards. The proposed rule also contains revised definitions and provisions to implement the test procedures, calculation methods that manufacturers could use to determine the efficiency of some of their models, and enforcement methods for distribution transformers. The Department would use the test procedures in evaluating whether, and to what extent, energy conservation standards are warranted for distribution transformers. If standards are promulgated, then these test procedures and the other provisions proposed today would be used to determine efficiency and assess compliance of the transformers subject to the standards.

DATES: The Department will hold a public meeting on the matters addressed in this document, on Monday, September 27, 2004, beginning at 9 a.m. in Room 1E–245, in Washington, DC. The Department must receive requests to speak at the meeting, and a signed original and electronic copy of statements to be given at the meeting, no later than 4 p.m., Monday, September 13, 2004. The Department will accept written comments, data, and information in response to this notice before or after the public meeting, but no later than Monday, November 8, 2004. See section IV, ''Public Participation,'' of this notice for details.

ADDRESSES: You may submit comments, identified by docket number EE–TP–98–550 and/or RIN number 1904–AA85, by any of the following methods:

- Federal eRulemaking Portal: *http://www.regulations.gov.* Follow the instructions for submitting comments.
- E-mail: *DistTransformersTP–SNOPR@ee.doe.gov.* Include EE–TP–98–550 and/or RIN 1904–AA85 in the subject line of the message.
- Mail: Ms. Brenda Edwards-Jones, U.S. Department of Energy, Building Technologies Program, Mailstop EE–2J, SNOPR for Distribution Transformer Test Procedures, EE–TP–98–550 and/or RIN 1904–AA85, 1000 Independence Avenue, SW., Washington, DC, 20585–0121. Telephone: (202) 586–2945. Please submit one signed original paper copy.
- Hand Delivery/Courier: Ms. Brenda Edwards-Jones, U.S. Department of Energy, Building Technologies Program, Room 1J–018, 1000 Independence Avenue, SW., Washington, DC, 20585.

Instructions: All submissions received must include the agency name and docket number or Regulatory Information Number (RIN) for this rulemaking. For detailed instructions on submitting comments and additional information on the rulemaking process, see section IV of this document (Public Participation).

Docket: For access to the docket to read background documents or comments received, go to the U.S. Department of Energy, Forrestal Building, Room 1J–018 (Resource Room of the Building Technologies Program), 1000 Independence Avenue, SW., Washington, DC, (202) 586–9127, between 9 a.m. and 4 p.m., Monday through Friday, except Federal holidays. Please call Ms. Brenda Edwards-Jones at the above telephone number for additional information regarding visiting the Resource Room. Please note: The Department's Freedom of Information Reading Room (formerly Room 1E–190 at the Forrestal Building) is no longer housing rulemaking materials.

FOR FURTHER INFORMATION CONTACT: Cyrus Nasseri, Project Manager, Test Procedures for Distribution Transformers, Docket No. EE–TP–98–550, U.S. Department of Energy, Energy Efficiency and Renewable Energy, Building Technologies Program, EE–2J, 1000 Independence Avenue, SW., Washington, DC 20585–0121, (202) 586–9138, E-mail: *cyrus.nasseri@ee.doe.gov.*

Francine Pinto, Esq., or Thomas B. DePriest, Esq., U.S. Department of Energy, Office of General Counsel, GC–72, 1000 Independence Avenue, SW., Washington, DC 20585–0121, (202) 586–9507, E-mail: *Francine.Pinto@hq.doe.gov,* or *Thomas.DePriest@hq.doe.gov.*

SUPPLEMENTARY INFORMATION:

I. Introduction
A. Authority and Background
B. Summary of the Proposed Rule
II. Discussion
A. The Test Procedure for Distribution Transformers
1. General Discussion
2. Reference Conditions
B. Transformers Subject to the Test Procedure
1. Background
2. Changes to, and retention of, provisions in the 1998 proposed rule
3. Exclusions discussed in the 1999 reopening notice
4. Additional exclusions drawn from NEMA TP 1
5. Definitions of excluded transformers
C. Basic Model
D. Manufacturer's Determination of Efficiency
E. Enforcement Procedures
F. New Part 432
III. Procedural Requirements
A. Review Under Executive Order 12866
B. Review Under the Regulatory Flexibility Act
C. Review Under the Paperwork Reduction Act
D. Review Under the National Environmental Policy Act
E. Review Under Executive Order 13132
F. Review Under Executive Order 12988
G. Review Under the Unfunded Mandates Reform Act of 1995
H. Review Under the Treasury and General Government Appropriations Act, 1999
I. Review Under Executive Order 12630
J. Review Under the Treasury and General Government Appropriations Act, 2001
K. Review Under Executive Order 13211
L. Review Under Section 32 of the Federal Energy Administration Act of 1974
IV. Public Participation
A. Attendance at Public Meeting
B. Procedure for Submitting Requests to Speak
C. Conduct of Public Meeting
D. Submission of Comments

I. Introduction

A. Authority and Background

Part C of Title III of the Energy Policy and Conservation Act (EPCA) provides for an energy conservation program for certain industrial equipment. (42 U.S.C. 6311–6317) Section 346 of EPCA states that the Secretary of Energy (Secretary) must prescribe testing requirements and energy conservation standards for those ''distribution transformers'' for which the Secretary determines that standards ''would be technologically feasible and economically justified, and would result in significant energy savings.'' (42 U.S.C. 6317(a)) On October 22, 1997, the

Department issued a notice setting forth its determination (hereafter referred to as the ''Determination'') that, based on the best information currently available, energy conservation standards for electric distribution transformers appear to be technologically feasible and economically justified, and are likely to result in significant energy savings. 62 FR 54809. The Determination was based, in part, on analyses conducted by the Oak Ridge National Laboratory (ORNL), as explained in reports issued in July 1996 and September 1997.[1] 62 FR at 54811–54816.

The Department subsequently began the process for its adoption of test procedures for distribution transformers. On February 10, 1998, the Department held a public workshop (1998 workshop) to discuss the following issues: (a) Adoption of national and international consensus standards as the test procedures for determining the energy efficiency of distribution transformers, (b) defining the transformers that the test procedures will cover, (c) imposition of a burden on industry, especially on manufacturers, with additional testing and data processing, (d) definition of ''basic model'' for distribution transformers, (e) sampling plan for units to be tested, (f) selection of an energy consumption measure for distribution transformers, (g) selection of reference temperatures, (h) requirements for applying corrections to measurement data, and (i) requirements for quality assurance in testing. The Department also gave interested parties an opportunity to submit comments on these issues.

In 1998, the National Electrical Manufacturers Association (NEMA) published ''NEMA Standards Publication No. TP 2–1998, *Standard Test Method for Measuring the Energy Consumption of Distribution Transformers,*'' (NEMA TP 2) a publication that extracts and presents the pertinent parts of the current industry standards for distribution transformer efficiency testing. NEMA TP 2 presents a weighted average method to use to compute the energy efficiency of transformers, in order to demonstrate compliance with the efficiency levels in NEMA Standard TP 1–1996 (NEMA TP 1).[2] Comments received at the 1998 workshop, written comments associated with this workshop, and NEMA TP 2 formed the basis for preparing the November 12, 1998, Notice of Proposed Rulemaking (the ''1998 proposed rule''). 63 FR 63359.

In the 1998 proposed rule, the Department proposed to adopt test procedures that (1) it would use to evaluate distribution transformers for efficiency standards, and (2) manufacturers and DOE would use to determine the efficiency of any transformers which the standards covered. DOE proposed to incorporate by reference as its test procedures, provisions from either Institute of Electrical and Electronics Engineers (IEEE) Standards C57.12.90–1993 and C57.12.91–1993 (using IEEE C57.12.00–1993 as an additional reference source), or NEMA TP 2. The 1998 proposed rule also included proposed definitions of ''distribution transformer'' and related terms, of terms used in the test procedure provisions, and of ''basic model,'' and proposed a sampling plan for applying the test procedures to perform compliance testing. The sampling approach was based on the plan for compliance testing in 10 CFR part 430, which contains energy efficiency requirements for consumer products, but with modifications geared to transformers and a minimum sample size of five units. The Department selected this approach because it appeared to provide a satisfactory balance between assuring accuracy of efficiency ratings for distribution transformers and minimizing the test burden on manufacturers. The Department also sought comment on three alternative compliance approaches for basic models produced in small numbers.

DOE held a public hearing on January 6, 1999, on the 1998 proposed rule and received nine written comments. After reviewing the oral and written comments, DOE concluded that the comments raised a number of significant issues that required additional analysis. On June 23 1999, the Department reopened the comment period on the 1998 proposed rule, 64 FR 3343, (the ''1999 reopening notice'') to provide an opportunity for additional public comment on the following issues: (a) The suitability of NEMA TP 2 for adoption as the DOE test procedure; (b) the adequacy of stakeholder opportunity to review NEMA TP 2; (c) the transformers covered under the definition of ''distribution transformer;'' (d) the suitability of the definition of ''basic model'' for the purpose of grouping transformers to limit the test burden; and (e) the appropriateness of the proposed sampling plan and a number of alternatives for demonstrating compliance. The Department received five comments in response to the 1999 reopening notice and two additional comments during the development of today's proposed test procedure. These comments are addressed throughout section II of this supplemental notice of proposed rulemaking.

Finally, concurrent with this rulemaking, the Department has evaluated the establishment of energy conservation standards for distribution transformers. On October 2, 2000, the Department made available a *Framework Document for Distribution Transformer Energy Conservation Standards Rulemaking*, which was the subject of a public workshop on November 1, 2000, and on which stakeholders submitted written comments before and after the workshop. 65 FR 59761 (October 6, 2000). Thereafter, the Department visited manufacturers of distribution transformers and posted on DOE's Web site[3] several draft reports concerning the development of standards for these transformers. The next step in this process is the Department's issuance of an Advance Notice of Proposed Rulemaking (ANOPR) for distribution transformer standards. The Department expects to publish the ANOPR in the **Federal Register** later this year.

B. Summary of the Proposed Rule

In today's notice, the Department proposes to adopt a new test procedure for determining the energy efficiency of distribution transformers. The test procedure consists primarily of test methods contained in IEEE Standards C57.12.90–1999 and C57.12.91–2001, and NEMA TP 2. Initially, the Department would use the test procedure to test distribution transformers for which it is considering energy conservation standards. If DOE promulgates minimum efficiency standards, the Department would then require manufacturers to use the test procedure to determine compliance with the standards and as a basis for efficiency representations for transformers they produce that the standards cover. The Department would also use the test procedure in enforcement proceedings concerning compliance with standards or labeling requirements.

The proposed test procedure is a ''stand alone'' document. Thus, the

[1] The titles and references for these reports are ''Determination Analysis of Energy Conservation Standards for Distribution Transformers, ORNL–6847'' and ''Supplement to the 'Determination Analysis' (ORNL–6847) and Analysis of NEMA Efficiency Standard for Distribution Transformers, ORNL–6925.''

[2] NEMA TP 1 contains suggested efficiency levels. Its full name and title are ''NEMA Standards Publication No. TP 1–1996, *Guide for Determining Energy Efficiency for Distribution Transformers.*''

[3] *http://www.eere.energy.gov/buildings/appliance_standards/commercial/dist_transformers.html.*

language of today's proposed rule sets forth all testing requirements, without reference to other sources, for determining the energy efficiency of distribution transformers. The measurement of electric power consumed by the transformer is in the form of no-load and load losses. The proposed rule specifies methods with which to measure the following quantities: Temperature of the windings and the core, current, voltage, waveform, and direct current resistance of the windings. The proposed rule also contains definitions that establish which transformers the test procedure covers and that clarify terms used in the test procedure. In addition, to reduce the number of transformers that manufacturers would have to test, the Department proposes to define ''basic model,'' proposes a sampling plan, and proposes to allow manufacturers to use alternative methods, other than testing, for determining the efficiency of some basic models. Finally, the proposed rule also sets forth enforcement procedures, including a testing protocol, for distribution transformers.

The Department's adoption of uniform test procedures would not necessarily mean that it would adopt a single efficiency standard or set of labeling requirements for all transformers that today's proposed rule covers. In the separate rulemaking proceeding concerning energy conservation standards for distribution transformers, the Department intends to divide such transformers into classes and may conclude that standards are not warranted for some classes of transformers that are within the scope of today's test procedure. Furthermore, for the classes for which DOE decides to adopt standards, it may create a separate standard for each class of products where the record indicates the products include a utility or performance-related feature that other products lack and that affects energy efficiency.

II. Discussion

A. The Test Procedure for Distribution Transformers

1. General Discussion

The Department developed today's proposed test procedure in order to have a single primary reference standard that would clearly set forth all testing requirements for the distribution transformers that might be covered by an EPCA energy conservation standard. DOE adapted virtually all of the provisions of the test procedure from NEMA TP 2 and the following four widely used IEEE standards: (1) IEEE C57.12.90–1999, ''IEEE Standard Test Code for Liquid-Immersed Distribution, Power and Regulating Transformers and IEEE Guide for Short Circuit Testing of Distribution and Power Transformers,'' (2) IEEE C57.12.91–2001, ''IEEE Standard Test Code for Dry-Type Distribution and Power Transformers,'' (3) IEEE C57.12.00–2000, ''IEEE Standard General Requirements for Liquid-Immersed Distribution, Power and Regulating Transformers,'' and (4) IEEE C57.12.01–1998, ''IEEE Standard General Requirements for Dry-Type Distribution and Power Transformers Including those with Solid Cast and/or Resin Encapsulated Windings.'' [4]

IEEE C57.12.90–1999 and IEEE C57.12.91–2001 address tests and measurements leading to the energy consumption and efficiency values. IEEE C57.12.00–2000 and C57.12.01–1998 complement IEEE C57.12.90–1999 and IEEE C57.12.91–2001 by specifying requirements such as measurement tolerances, which are critical for defining the testing conditions. Each of these four IEEE standards contains different elements of the energy efficiency test procedure for distribution transformers, as well as material not required for efficiency testing. Thus, if the Department were to prescribe the transformer test procedure by reference to these sources, it would require the user to consult several references, and applicable sections and clauses within those references, in order to construct a single test procedure. DOE believes that having a single, reference test procedure document would enhance the convenience to users and reduce the potential for misinterpretation of testing requirements.

Because NEMA TP 2 was designed to be a document that would contain all applicable testing provisions, the Department considered adopting it as the DOE test procedure. 63 FR at 63362, 63370–72; 64 FR at 33431–32. The Department therefore reviewed NEMA TP 2 and compared it with the similar material in the IEEE standards. NEMA TP 2 excerpts the information pertinent to transformer efficiency testing from these standards (using earlier editions of the standards), and presents it in abbreviated form. As a result of its review, the Department determined that NEMA TP 2 lacks the clarity and detail required in a regulatory document, and also contains a number of technical and typographical errors. Consequently, DOE is not proposing to use it as the DOE test procedure. Nevertheless, because NEMA TP 2 brings transformer efficiency testing provisions into a single document, the Department used it to develop today's proposed test procedure, which is designed to approach the level of detail of the IEEE standards. The following are examples of the ways in which the Department found NEMA TP 2 to be unsatisfactory for use as the DOE test procedure, and in which today's proposed test procedure differs from NEMA TP 2:

(1) Section 3 in NEMA TP 2, Resistance Measurements, contains insufficient detail, particularly in describing instrumentation. The proposed test procedure provides greater detail on the description of instrumentation, especially resistance bridges and their operating equations, and provides more information on temperature measurements.

(2) Figures 2 and 3 in NEMA TP 2 are too crowded with information. As a result, the graphics and print symbols are too small, some to the point of being unreadable. The proposed test procedure seeks to improve the value of the diagrams, by incorporating four simplified diagrams instead of two.

(3) Table 3 of NEMA TP 2 lacks a descriptive title, the title of Table 3's first column should be ''Resistance to be Measured,'' and the titles of the remaining three columns should each be followed by the word ''Method.'' In addition, Table 3's identification of the ranges covered by various methods does not reflect the capabilities of modern instruments. Resistance meters are available to measure resistances on a four-terminal basis below 10 ohms, and voltmeter-ammeter methods are useable above 100 ohms. Hence, today's proposed rule does not contain a table that is a counterpart to Table 3, and but instead sets forth in narrative form the approximate ranges for the use of each method.

(4) Equation (2) for phase angle correction, in section 4.1.4 of NEMA TP 2, is incorrect. The equation should be $Pc = Pm - VmAm\ (Wd - Vd + Cd)\ \sin f$, where $f = \cos^{-1}(Pm/VmAm)$. Also, NEMA TP 2 fails to define the polarities of the phase angle errors. For example, Wd is positive if the phase angle between the voltage and current phasors as sensed by the wattmeter is smaller than the true phase angle. The Department believes that today's proposed test procedure correctly addresses these points based on the provisions of IEEE C57.12.90 and C57.12.91. The Department also notes that, although equation (4–3) in section 4.5.3.2 of the proposal does not appear in the IEEE standards, it provides information similar to that in Table 1 of

[4] This discussion does not address section 7 of NEMA TP 2, ''Demonstration of Compliance,'' which is discussed in section II–D.

the IEEE C57.12.90 as to whether phase angle correction is required.

(5) Section 4.3.4.2 of NEMA TP 2 lacks some of the steps needed to calculate the load loss from the previously measured quantities. The test procedure proposed in today's notice includes all of the necessary steps.

2. Reference Conditions

To establish a standard basis for test results, today's proposed test procedure specifies reference conditions for testing and rating the efficiency of distribution transformers. In particular, the test procedure would require that equipment efficiencies be rated at the loading levels of 35 percent for low-voltage, dry-type models and 50 percent for medium-voltage, dry-type and all liquid-immersed models, as specified in NEMA TP 2.

The Department recognizes that considerations other than efficiency commonly require manufacturers to test transformers at 100 percent of their rated load. Today's proposed test procedure includes analytical techniques that a manufacturer could use, where it has tested a transformer at 100 percent of its rated load, to calculate the transformer's efficiency at the loading point specified in the test procedure. Thus, the manufacturer would not have to test the transformer at both the loading point prescribed in the test procedure and at 100 percent of its rated load. Moreover, once today's test procedure has been implemented, should experience indicate that the loading levels specified in the test procedure are not appropriate for rating some distribution transformers, the Department would consider adopting different loading levels for those types of transformers.

B. Transformers Subject to the Test Procedure

1. Background

In essence, section 346 of EPCA directs the Department to consider whether an energy conservation program for ''distribution transformers'' is warranted. (42 U.S.C. 6317(a)(1)) However, the statute does not define ''distribution transformer.'' In the Determination notice, the Department interpreted the term ''distribution transformer'' in section 346 of EPCA to mean ''all transformers with a primary voltage of 480 V to 35 kV, a secondary voltage of 120 V to 480 V, and a capacity of either 10 to 2500 kVA for liquid-immersed transformers or 0.25 kVA to 2500 kVA for dry-type transformers,'' except for transformers which are not continuously connected to a power distribution system as a distribution transformer. 62 FR at 54811. The 1998 proposal proposed to adopt essentially this same definition, except that the upper limit on secondary voltage was increased from 480 V to 600 V because the Department learned that industry typically classifies transformers with a secondary voltage up to 600 V as distribution transformers. 63 FR 63370 (November 12, 1998).

The primary reason for defining distribution transformer in this rulemaking is to identify the transformers to which the Department's test procedure would apply. As indicated above, initially the test procedure would apply only to those transformers that the Department is evaluating for standards. Thus, the issue of which products should be within today's proposed definition of distribution transformer is identical to the issue of which products the Department will evaluate for standards. As the following discussion indicates, in developing this definition, the Department has considered information received in its rulemaking on transformer standards. The Department has also based the proposed definition on consideration of the nature of transformers that are commonly understood to be ''distribution transformers,'' and of whether energy conservation standards for such a transformer would result in significant energy savings.

2. Changes to, and Retention of, Provisions in the 1998 Poposed Rule

Today's proposal eliminates from the definition of distribution transformer the 1998 proposed rule's lower limits on primary voltage and secondary voltage of 480 V and 120 V, respectively. In the 1999 reopening notice, the Department stated that it did not intend to increase the lower limit on primary voltage to 600 V. 64 FR at 33432–33. In the proceedings on the development of standards, NEMA strongly advocated that the Department have no lower limits on the primary and secondary voltages of the transformers it evaluates for standards, reflecting the coverage of NEMA TP 1. (NEMA, No. 35 at p. 4 and No. 36 at p.2) [5] Consistent with NEMA's position, the Department is concerned that defining a distribution transformer as having a minimum primary and/or secondary voltage may result in eliminating distribution transformers from consideration in the standards rulemaking. The Department also believes that it can include other elements in its definition of ''distribution transformer'' to ensure that its test procedures and standards for transformers would cover only products that are truly ''distribution transformers.'' Therefore, in accordance with its planned approach in the standards rulemaking, and to ensure that its test procedure will apply to all distribution transformers evaluated for standards, the Department has removed the lower bounds on primary and secondary voltage from the definition of distribution transformer that the Department is proposing today.

With regard to the 1998 proposed rule's capacity criteria for defining a distribution transformer (10 kVA to 2500 kVA for liquid-immersed units and 0.25 kVA to 2500 kVA for dry-type units), the 1999 reopening notice stated the Department's intent to increase the lower capacity limit for dry-type units to either 1, 5, 10 or 15 kVA. 64 FR at 33433. The Department understands, based on information it has received in the course of its work on the standards rulemaking, that 5 and 10 kVA dry-type transformers are normally not used in the distribution of electric energy. Therefore, today's definition of distribution transformer proposes a lower capacity limit for dry-type units of 15 kVA. The Department, however, is still considering in the standards rulemaking whether to evaluate for standards dry-type transformers with ratings of 5 and 10 kVA. Therefore, DOE seeks comment in the instant rulemaking on whether such transformers are properly classified as distribution transformers, and whether it should adopt one of these levels as the lower capacity limit for dry-type units in the definition of distribution transformer, instead of the 15 kVA level in today's proposed rule.

The 1998 proposed rule's definition also excluded ''transformers which are not designed to be continuously connected to a power distribution system as a distribution transformer * * * [such as certain specifically identified types of transformers] and other transformers which are not designed to transfer electrical energy from a primary distribution circuit to a secondary distribution circuit, or within a secondary distribution circuit, or to a consumer's service circuit.'' 63 FR at 63370. The Department is concerned that these criteria may be too vague and imprecise, and subject to misinterpretation, and may fail to establish clearly which transformers are and are not covered under EPCA as

[5] No. 35 and No. 36 refer to the numbers of the written comments and supporting documents included or referenced in the docket for this rulemaking (Docket Number EE–TP–98–550). Numbers 4 and 2 refer to the cited page numbers in those written comments.

distribution transformers. This would be particularly true for parties that work with distribution transformers in non-utility related applications, where much of the terminology in these criteria—for example, phrases like ''to a consumer's service circuit''—is inapplicable and may be meaningless. In the standards rulemaking, NEMA has advocated that the Department adopt a definition of distribution transformer that aligns with the scope of NEMA TP 1. (NEMA No. 35 at p. 4) The scope provision of NEMA TP 1 states that the standard applies to transformers meeting numerical criteria of the types discussed above—for example, capacity in kVA—and then lists specific types of transformers to which the standard does not apply. (NEMA TP 1 at p. 1)

Today's proposed rule follows this approach in defining distribution transformer and is similar to the scope provision of NEMA TP 1. In addition to having numerical criteria, the proposed definition lists types of transformers that are made for applications unrelated to the distribution of electricity, or for which standards would not produce significant energy savings, and provides that they are not ''distribution transformers.'' Such a definition is clearer, more precise and less subject to misinterpretation than the 1998 proposed rule's definition. Although the list of excluded transformers is quite similar to that in NEMA TP 1, DOE has modified it slightly.[6] The proposed rule also contains a definition for each of these excluded transformers.

The 1998 proposed rule identified the following transformers as not being distribution transformers: grounding transformers, machine-tool (control) transformers, regulating transformers, testing transformers, and welding transformers. 63 FR at 63370. They were not addressed further in either the comments DOE received in this rulemaking or the 1999 reopening notice and they are listed as exclusions in the scope provision of NEMA TP 1. For all of these reasons, they are excluded from being ''distribution transformers'' in today's proposed rule.

The 1998 proposed rule also excluded ''converter and rectifier transformers with more than two windings per phase'' from the definition of distribution transformer, and provided definitions for these transformers. 63 FR at 63370. Comments on the 1998 proposed rule and the 1999 reopening notice supported these exclusions, as well as the exclusion of rectifier transformers with less than three windings. (Alexander D. Kline, P.E., No. 14 at pp.1–2; NEMA, No. 15 at p. 2, No 21 at p. 5, and No. 28 at p. 5; Howard Industries, Inc., No. 18 at p. 3 and No. 27 at p. 2) The Department now believes that exclusion of converter transformers is unnecessary. Today's proposed definition of distribution transformer has an upper limit on capacity of 2500 kVA, and it is the Department's understanding that a transformer connected to a converter, *i.e.*, a converter transformer, always has a capacity far above this level. Thus, their capacity automatically excludes them from the definition, and they need not be specifically excluded. Rectifier transformers, however, often have a capacity below 2500 kVA, but they are not connected to electric distribution systems and cannot be readily tested for losses. *See* 64 FR at 33433 (and comments cited there) and 63 FR at 63363. Therefore, in today's proposed rule they are in the list of products not included as distribution transformers. The Department is also proposing to adopt the definition of ''rectifier transformer'' that was recently incorporated into IEEE C57.12.80–2002, clause 3.379, rather than the definition proposed in the 1998 proposed rule. The Department believes the IEEE definition will be more widely understood and accepted, without any loss of technical precision.

3. Exclusions Discussed in the 1999 Reopening Notice

The 1999 reopening notice stated that the Department was also inclined to exclude autotransformers, and transformers with tap ranges greater than 15 percent, from the definition of distribution transformer. 64 FR at 33433–34. The notice identified comments on the 1998 proposed rule that advocated these exclusions and the Department's reasons for favoring them. Some of the comments in response to the reopening notice supported the exclusions and none opposed them. Therefore these exclusions are included in today's proposed rule.

The Department also discussed in the 1999 reopening notice whether it should exclude sealed or non-ventilated transformers, special impedance transformers, and harmonic transformers from the definition of distribution transformer. 64 FR at 33433–34. Each of these types of transformer can be a distribution transformer. The Department stated that it did not find persuasive the reasons commenters had advanced for excluding these products, and that it intended to include them unless it received information justifying their exclusion. As to non-ventilated or sealed transformers, in response to the 1999 reopening notice NEMA indicated that the unique features of these transformers could pose a hardship for some manufacturers in testing them, and that they are a small part of the market for distribution transformers. (NEMA, No. 28 at p. 5) Given their small market share, it appears that adopting standards for non-ventilated or sealed transformers would not result in significant energy savings. For these reasons, the Department has excluded them from today's proposed definition of distribution transformer. DOE specifically requests comment, however, on whether such exclusion is warranted.

With respect to special impedance distribution transformers, NEMA states that they have much higher load losses than standard impedance distribution transformers, and are designed to meet unusual performance functions. (NEMA, No. 28 at p. 5) It also asserts that, because they are relatively expensive to build, a lack of Federal efficiency standards for these products would not cause them to be manufactured and sold in increased volumes as substitutes for standard distribution transformers that were subject to standards. (NEMA, No. 15 at p. 2) The Department agrees with these points, and believes that the market for these products is small and therefore regulating them would not result in significant energy savings. For these reasons, today's proposed rule excludes special impedance transformers from the definition of distribution transformer.

DOE questions, however, the validity of NEMA's claim that any transformer with an impedance outside the range of four to eight percent is a special impedance transformer. (NEMA, No. 15 at p. 2) To address this issue, the Department is proposing a definition for

[6] Today's proposed definition of ''distribution transformer'' excludes almost verbatim 13 of the 17 types of transformers specifically excluded from NEMA TP 1. (The list of exclusions from TP 1 appears on page one of TP 1.) NEMA TP 1, however, also excludes ''transformers designed for high harmonics'' and ''harmonic transformers,'' but today's proposed definition addresses these transformers by excluding ''harmonic mitigating transformers'' and certain ''K-factor'' (harmonic tolerating) transformers. In addition, although TP 1 excludes ''retrofit transformers'' and ''regulation transformers,'' the proposed rule excludes neither—the former for reasons discussed in section II–B–3 in the text and the latter because DOE believes they are more accurately described as ''regulating transformers,'' which are already in the list of exclusions in NEMA TP 1 and the proposed rule. In addition, NEMA TP 1 excludes ''non-distribution transformers, such as UPS [uninterruptible power supply] transformers.'' Although the proposed definition excludes uninterruptible power supply transformers, the remainder of this exclusion is vague, and the Department believes that including it in the regulations would undercut the precision achieved by listing specific types of transformers as being excluded from the definition of ''distribution transformer.''

''special impedance transformer'' that incorporates tables which set forth the normal impedance range at each standard kVA rating for liquid-immersed and dry-type transformers. DOE would consider any transformer built with an impedance rating outside the ranges defined as normal to be considered special impedance, and would exclude it from the definition of distribution transformer. The Department specifically requests comments on the normal impedance ranges shown in Tables 1 and 2 of today's proposed definition of ''special impedance transformer.''

Concerning harmonic distribution transformers, the Department understands that there are two types of such transformers, those that correct harmonics (harmonic mitigating transformers) and those that simply tolerate, and do not correct, harmonics (called harmonic tolerating or K-factor transformers). NEMA appears to assert that neither type can be accurately tested to measure its efficiency. (NEMA, No. 28 at p. 5) Although the Department has doubts about the validity of this assertion, it agrees that harmonic mitigating transformers are a special type of transformer. Furthermore, DOE believes that few of them exist in the distribution system, regulating them would save little energy, and they are sufficiently expensive to manufacture that excluding them would be unlikely to result in a loophole if DOE adopted standards for other transformers. DOE is, therefore, excluding harmonic mitigating transformers from coverage in today's proposed rule.

The situation with harmonic tolerating (K-factor) transformers is not so clear cut. These transformers are designed for use in industrial situations where electronic apparatus can cause transformer losses that are much higher than normal, and they are designed to accommodate such losses without excessive temperature rise. But apparently it is economically viable to use K-factor distribution transformers that have low K-factors and relatively low efficiencies, in standard applications, instead of regular distribution transformers with higher efficiencies. The Department understands that, after the State of Minnesota began to require that dry-type distribution transformers installed in the state meet NEMA TP 1 efficiency levels, with an exemption for K-factor and other transformers excluded from NEMA TP 1, the installation of K–4 transformers increased substantially. These K–4 transformers had efficiencies that were not only below the levels mandated by NEMA TP 1, they were also below the prevailing efficiency levels of conventional distribution transformers that had been installed in Minnesota prior to the State's adoption of NEMA TP 1. As the K rating of K-factor transformers increases, however, they become increasingly sophisticated and expensive to produce, and their market share decreases. Thus, the risk that they would be used in place of more efficient transformers declines, and the potential energy savings from regulating them becomes insignificant.

The Department believes that K–13 is a reasonable demarcation between K-factor distribution transformers that should be evaluated for standards, and those for which standards appear to be unwarranted. Above the K–4 rating, K–9 and K–13 are the next higher standard K-factor rated transformers. The Department believes that while K–9 products are a small part of the market, it is uncertain whether, absent standards for them, K–9 distribution transformers would be substituted for transformers that are subject to standards (as happened in Minnesota with K–4 transformers). The Department is aware that K-factor transformers at K–13 and higher are significantly more expensive than conventional transformers, and believes it is very unlikely they would be purchased in place of distribution transformers subject to standards. Thus, today's proposed definition excludes transformers with a K-factor rating of K–13 or higher from the definition of a distribution transformer. The definition includes K-factor transformers with lower standard K-factors (K–4 and K–9), and DOE is evaluating them for standards during its rulemaking on transformer standards. The Department specifically invites comments on this issue.

Finally, information developed thus far in this proceeding indicates that ''retrofit distribution transformer'' refers to any transformer that replaces an existing distribution transformer. The Department understands, however, that the term also may refer more specifically to a transformer used in a distribution substation between primary and secondary switchgear 30 to 50 years old, which must be designed so that terminations are compatible with existing switchgear and for which other features must differ from present-day designs. Comments on the 1998 proposed rule asserted that the Department's exclusions from the definition of distribution transformer should provide for situations where existing distribution transformers cannot be replaced with more efficient retrofit transformers, which generally would be larger than, or configured differently from, the existing transformers. (NEMA, No. 21 at pp. 5–6) In the 1999 reopening notice the Department requested further, more detailed information on this issue. 64 FR at 33434. The Department has not received such information. Clearly retrofit distribution transformers are distribution transformers, and the Department lacks a basis for creating an exclusion for them in today's rule. In the standards rulemaking, however, the Department intends to gather information on the nature of, and dimensional restrictions for, these transformers, in order to decide whether to treat them separately, as for example by excluding them, by creating a separate class(es) or both, if the Department adopts energy conservation standards for distribution transformers.

4. Additional Exclusions Drawn From NEMA TP 1

In addition to excluding from its scope the types of transformers discussed in sections II–B–2 and 3, NEMA TP1 also excludes drive (isolation), traction-power, and uninterruptible power supply transformers. Drive or isolation transformers are a type of distribution transformer that is specially designed to accommodate added loads of drive-created harmonics, and mechanical stresses caused by an alternating current or direct current motor drive. Although intrinsically they have higher losses than conventional distribution transformers, DOE understands that they also have low sales volumes. Therefore, the Department believes standards for this product would not result in significant energy savings and is proposing to exclude them from the definition of distribution transformer. In addition, the Department notes that there are many kinds of drive transformers, and development of the varied test methods and multiple standard levels that would be necessary to achieve even the limited energy savings possible for this product would be a complex undertaking.

As to traction-power transformers, these are designed to supply power to railway trains or municipal transit systems, at frequencies of 16⅔ or 25 Hz in an alternating current circuit or as a rectifier transformer. These transformers are excluded from today's proposed definition of distribution transformer by provisions discussed above that exclude both transformers operating at these low frequencies as well as rectifier transformers. Therefore, DOE need not consider whether to specifically exclude them.

Finally, an uninterruptible power supply transformer is not a distribution transformer. It does not have as one of its functions stepping down voltage, but rather it is a transformer that is a system conditioning device. It is used as part of the electric supply system for sensitive equipment that cannot tolerate system interruptions or distortions, and counteracts such irregularities. Therefore, it is excluded from the definition of distribution transformer in today's proposed rule.

5. Definitions of Excluded Transformers

As noted above, today's proposed rule includes definitions for the transformers DOE is proposing to exclude from today's rule. This will help to make clear exactly which transformers the proposed rule covers. For the following excluded transformers, DOE has taken the definitions from IEEE C57.12.80–2002: autotransformers, grounding transformers, machine-tool (control) transformers, non-ventilated transformers, rectifier transformers, regulating transformers, and sealed transformers. For K-factor transformers, DOE took the definition from Underwriters Laboratories (UL) UL1561 and UL1562.

C. Basic Model

It is common for a manufacturer to make numerous models of a product covered by EPCA, and under the Act each model is potentially subject to testing for energy efficiency. In order to lessen the burden of testing, the Department allows manufacturers to group product models having essentially identical characteristics with respect to energy consumption into a single family of models. The Department has used the term ''basic model'' to represent such a family of models, consisting of models of a product that are essentially the same in some or all of the following respects: performance, physical, mechanical, electrical and functional characteristics. For each type of product, the Department's regulations set forth which of these characteristics applies in identifying basic models. Each manufacturer can then test a sufficient, representative sample of units of each basic model it manufactures, and derive an efficiency rating for each basic model that would apply to all models subsumed by that basic model. Components of similar design can be substituted in a basic model without requiring additional testing if the represented measures of energy consumption continue to satisfy applicable provisions for sampling and testing.

At the 1998 workshop, DOE presented a basic model definition for distribution transformers that incorporated these concepts. All groups and individuals who participated in that workshop opposed DOE's proposed definition because distribution transformers, unlike consumer appliances, are not produced in large numbers of virtually identical units. NEMA advocated at the workshop that DOE define basic model to include all transformers having the same nominal power (kVA) rating, the same insulation type (liquid immersed or dry-type), and the same number of phases (single or three), and operating within the same voltage range. (Public Workshop Tr., No. 2GG at pp. 54–55) [7] The Department proposed such a definition in the 1998 proposed rule. 63 FR at 63369. As the Department pointed out in the 1999 reopening notice, however, it later realized that this approach would allow a single basic model to include models of transformers that have significantly different utility or performance-related features that affect their efficiency. This would be inconsistent with the nature of the groupings that the ''basic model'' concept is meant to permit, since all models within a basic model should be in the same product class. 64 FR at 33435.

All of the comments to the 1999 reopening notice that addressed the basic model definition supported the approach in the 1998 proposed rule, but none addressed DOE's concern that the 1998 proposed rule definition would permit inclusion of models with different energy consumption characteristics in any particular basic model. One comment stated that the proposed definition would be a sound way to reduce the testing burden on manufacturers. (Howard Industries, No. 27 at p. 3) DOE continues to believe that any definition of basic model under its regulations must require that all of the models included in a basic model have similar energy consumption characteristics and be within the same product class. This is necessary to assure that the efficiency rating derived for the basic model would accurately represent the efficiency of all of these models. The Department is therefore proposing a definition of basic model for distribution transformers that includes essentially the same criteria contained in the definition proposed in the 1998 proposed rule, plus a requirement that the transformers included in the basic model ''not have any differentiating electrical, physical or functional features that affect energy consumption.''

Today's proposed definition includes two editorial modifications to the criteria included in the 1998 proposed rule definition. First, the proposed definition omits the provision that transformers within a basic model must ''operate within the same voltage range.'' This criterion need not be stated explicitly in the proposed definition because it is embodied in the new proposed requirement that transformers cannot have differentiating electrical features that affect energy consumption. Second, the provision in the 1998 proposed rule that all transformers in a basic model must ''have a comparable nominal output power (kVA) rating'' is replaced in today's proposed rule with language that they have ''the same standard KVA rating.'' Use of the word ''same'' instead of ''comparable'' better achieves the Department's intent in the 1998 proposed rule to require that all transformers in a basic model have the same standard kVA rating, an approach supported in comments on the 1998 proposed rule and 1999 reopening notice. (NEMA, No. 28 at p. 7; Howard Industries, No. 18 at p. 3 and No. 27 at p. 3) In addition, the Department's understanding is that ''standard kVA rating'' means the same thing as ''nominal output power (kVA) rating.'' The former terminology is proposed here because it is more succinct and straightforward.

Regarding the term ''standard kVA rating,'' the transformer industry normally groups transformers based on apparent power rating and over the years has developed a set of standard ratings, ANSI/IEEE C57.12.00–2000 for liquid-immersed transformers and ANSI/IEEE C57.12.01–1998 for dry-type transformers. These standard ratings are set forth in the table that follows, and are the ratings that the Department refers to when it uses the term ''standard kVA rating'' in today's proposed basic model definition. Thus, under today's proposal, grouping of distribution transformers into basic models would be based in substantial part on groupings already used by the transformer industry.

[7] ''Public Workshop Tr., No. 2GG at pp. 54–55'' refers to the page number of the transcript of the ''Workshop on Test Procedures for Distribution Transformers'' held in Washington, DC on February 10, 1998.

STANDARD kVA RATINGS FOR DISTRIBUTION TRANSFORMERS*

[kVA]

Single phase	
10**	167
15	250
25	333
37.5	500
50	667
75	833
100	.....
Three phase	
15	300
30	500
45	750
75	1000
112.5	1500
150	2000
225	2500

* The Department anticipates that it will subdivide the kVA ratings for the medium-voltage dry-type distribution transformers by basic impulse insulation level (BIL) rating during the standards rulemaking process, and develop separate efficiency ratings for each BIL rating associated with each kVA rating for these transformers. This would not affect manufacturers' basic model delineations under today's proposed definition of basic model. By providing that a basic model cannot include transformers that have differentiating electrical features, the proposed definition would already require that transformers with different BIL ratings be separated into different basic models.

** 10 kVA is a standard rating for liquid-immersed distribution transformers, but not necessarily for dry-type transformers.

The Department recognizes that any given manufacturer would likely have more basic models under today's proposed definition of basic model than under the 1998 proposed rule's definition. Potentially, this could increase the manufacturers' test burden. The Department believes, however, that this potential would be more than offset by its proposal, discussed below, to allow manufacturers to determine the efficiencies of a substantial number of their basic models by using alternative efficiency determination methods, instead of testing these basic models.

D. Manufacturer's Determination of Efficiency

In developing proposed requirements for distribution transformers, the Department initially examined as a model its regulations for consumer appliances in 10 CFR part 430, and later also examined its regulations for electric motors in 10 CFR part 431, after it adopted them in late 1999. Under both parts 430 and 431, each manufacturer must determine the efficiency rating for each of its basic models, to a substantial extent from testing the model. (Such testing is commonly referred to as ''compliance testing.'') As just discussed, use of the ''basic model'' concept is one means for reducing the potential compliance testing burden on manufacturers. The Department also reduces the compliance testing burden by allowing manufacturers to test a sample of units of each basic model. For each type of product, the regulations prescribe a statistical sampling plan designed to give a reasonable assurance that on average the performance of all units manufactured and sold of each basic model complies with (*i.e.*, equals or exceeds) the manufacturer's rating for the model and the applicable energy conservation standard mandated under EPCA.

In the 1998 proposed rule, the Department proposed to use part 430's sampling approach for compliance testing, with numerical criteria geared to distribution transformers and a minimum sample size of five units. 63 FR at 63366–67. But this approach is not well suited to situations where only a very small test sample (fewer than five units, for example) is available, and therefore it could be problematic for some distribution transformers.[8] Although some basic models of transformers are mass-produced, many are custom-designed with production runs of as few as one unit. Consequently, in the 1998 proposed rule the Department sought comment on three alternative approaches for basic models with limited production. 63 FR at 63366–67.

In response to the 1998 proposed rule, industry representatives commented that the proposed sampling plan might require manufacturers to do a large amount of testing, and, as DOE had indicated in the 1998 proposed rule, the plan appears unsuitable for basic models with small production volumes. (Public Meeting Tr., No. 11DD at p. 174; Howard Industries, No. 18 at p.5) [9] None of the comments, however, addressed the alternatives DOE had presented for dealing with these small production models. See 64 FR at 33434. NEMA advocated that DOE adopt the sampling plan set forth in NEMA TP 2, significant elements of which are (1) on-going testing during 180-day periods of either 100 percent of the units manufactured or a random sample of a statistically valid number of units (but not less than five per month), (2) discarding or reworking all tested units that exceed losses allowed under the applicable standard by more than eight percent,[10] and (3) for each 180-day period, aggregating the test results of different basic models (comprising all or a portion of a manufacturer's production) to determine their collective compliance with the applicable standards.

In the 1999 reopening notice, the Department expressed concern about aggregation as used in NEMA TP 2, particularly for basic models produced in relatively large volumes (50 or more in a six-month period). In DOE's view, compliance of the large volume models could be demonstrated without aggregation. But the Department stated that aggregation combined with testing all of the units of a basic model has some merit, particularly for limited production models. Therefore, DOE identified for consideration several alternatives to the proposal in the 1998 proposed rule, including variations on NEMA TP 2 that would allow manufacturers to demonstrate the compliance of aggregations of basic models subject to certain conditions. 64 FR at 33434–35. The goal of these alternatives was to provide a reasonable statistical method for deriving efficiency ratings from test results that would minimize the risk of false negatives for small volume basic models, *i.e.*, would make it unlikely that a manufacturer would determine a complying basic model to be out of compliance. The Department indicated, however, that although some of these options may be sufficient to assure compliance with efficiency standards by basic models that are included in aggregations, they may not be adequate to establish the validity of the represented efficiency level for particular basic models.

The comments on the 1999 reopening notice generally supported DOE's adoption of the sampling plan in NEMA TP 2, with Howard Industries urging DOE to adopt an approach that would minimize the number of units that a manufacturer must test. (American Council for an Energy-Efficient Economy, No. 29 at p. 3; Howard Industries, No. 27 at pp. 2–3; NEMA, No. 28 at pp. 6–7). None of the comments, however, addressed the

[8] The operating characteristics of the proposed compliance plan were examined and reported in National Institute of Standards and Technology (NIST) Technical Note (TN) 1427, ''An Analysis of Efficiency Testing under the Energy Policy and Conservation Act: A Case Study with Application to Distribution Transformers'' (NIST TN 1427). NIST TN 1427 noted for example that for a test sample of two units of a basic model that is designed and performing at a given rated value, and has a standard deviation of three percent, the probability of demonstrating compliance with that rated value is only about 0.12, and the probability of a false conclusion of noncompliance is about 0.88.

[9] ''Public Workshop Tr., No. 11DD at pp. 54–55'' refers to the page number of the transcript of the ''Public Hearing on Energy Efficiency Test Procedures—Distribution Transformers'' held in Washington, DC on January 6, 1999.

[10] For transformers, the industry practice is to measure power loss and evaluate performance in terms of such losses. Performance is expressed in terms of efficiency only at the final stage of rating the product.

alternatives DOE had presented in the reopening notice that would allow for aggregation of basic models. NEMA essentially reiterated its view that the Department should adopt the sampling plan in NEMA TP 2, but asserted in addition that the approach proposed in the 1998 proposed rule had only a 50-percent probability of accurately representing the mean efficiency level of all units of a basic model and was statistically unsound. (NEMA, No. 28 at pp. 6–7)

Upon consideration of the comments in this proceeding, and a further review of the sampling plan in NEMA TP 2, the Department continues to believe that NEMA TP 2's sampling plan is inappropriate for adoption as a DOE requirement. DOE has done considerable analysis of this issue since issuing the 1998 proposed rule. The Department's key concern regarding NEMA TP 2's sampling plan is the aggregation of test results. NEMA TP 2 allows a manufacturer to aggregate the test results of all or any portion of its basic models to determine their compliance with applicable standards. (The NEMA TP 2 sampling plan could also be used to determine compliance with rated efficiencies.) All of the basic models included in an aggregate grouping would be deemed to be in compliance (with applicable rated efficiencies and/or standards) so long as their weighted average efficiency measured from testing is equal to or larger than the weighted average rated efficiency or standard that applies to them. Thus, in a group of basic models found in compliance under NEMA TP 2's sampling plan, some of the basic models could have efficiencies below their applicable levels so long as other models exceed their levels. The Department recognizes that NEMA TP 2's eight percent limitation on total losses for individual tested units would encourage manufacturers to produce each basic model at or above the applicable efficiency level, and would provide some assurance that each basic model complies with that level. However, given the variability inherent in the manufacture of distribution transformers, the Department believes such assurance would be of limited value.

This approach is unacceptable to DOE for several reasons. First, the Department believes EPCA contemplates that each basic model of a distribution transformer must comply with the efficiency standard applicable to it, not that all or some other disparate grouping of models will comply on average with the applicable standards. Section 346(a) of EPCA directs DOE to prescribe energy conservation standards for those distribution transformers for which the Department determines standards would save significant amounts of energy and would be technologically feasible and economically justified. (42 U.S.C. 6317(a)) And section 346(f) in effect bars distribution of any transformer that does not conform to the standard applicable to it. (42 U.S.C. 6317(f)) The Department believes these provisions preclude it from mandating use of the sampling plan in NEMA TP 2, under which a manufacturer could determine all or groups of its basic models to be in compliance on average with applicable standards, with limited assurance that any particular basic model complies.

Second, NEMA TP 2's sampling plan does not provide a sufficient basis for a manufacturer to make representations as to the efficiency of individual basic models. Section 346(d) of EPCA requires the Department to prescribe efficiency labeling requirements for the distribution transformers for which DOE prescribes standards. (42 U.S.C. 6317(d)) Although the statute does not specify the content of such requirements, for other products the statute requires: (1) Efficiency labels that are based on or include the energy efficiency of the model on which the label appears, (see 42 U.S.C. 6293(b)(4), 6294(c), and 6315(d)–(e)) and (2) that any energy use or efficiency representation by a manufacturer or other distributor ''fairly discloses'' the results of testing the product under the DOE test procedure (42 U.S.C. 6293(c) and 6314(d)). In addition, for consumer products and electric motors, DOE requires manufacturers to certify to the Department the efficiency or energy use of particular basic models that are covered by energy conservation standards. 10 CFR 430.62 and 431.123. In 10 CFR 430.24 and 431.24, DOE provides the basis for manufacturers to comply with these requirements, by prescribing sampling plans and other methods for manufacturers to rate each basic model they produce. As indicated above, however, because of the aggregation of test results it contemplates, the sampling plan in NEMA TP 2 could not be used to establish the efficiency of any particular basic model. If the Department were to prescribe this sampling plan for distribution transformers, it would in effect be precluded from adopting for this product labeling and other energy representation requirements based on the energy use or efficiency of particular basic models, since no uniform basis would exist for assuring the accuracy of such representations. This would represent a considerable departure from the requirements for other products, and the Department believes it would be inconsistent with the intent of EPCA's labeling requirements.

Third, the NEMA TP 2 sampling provisions are problematic when one considers the enforcement of efficiency standards and of labeling requirements. On the one hand, in an enforcement action the Government assesses whether a basic model is out of compliance with its labeled efficiency or the applicable standard. NEMA TP 2 contemplates, however, that a manufacturer could distribute a non-compliant basic model provided the manufacturer included other ''overly compliant'' models in an aggregation with the non-compliant model. The Department believes this inconsistency in approaches is unacceptable. On the other hand, it could be argued that DOE should align the enforcement provisions for distribution transformers with NEMA TP 2's sampling plan. This would mean that any enforcement action would have to concern all of the basic models included in an aggregation that the manufacturer had used to establish compliance, possibly including the manufacturer's entire line of products. The Department strongly believes that such an approach would be untenable, and that it should address its enforcement efforts to individual basic models alleged to be out of compliance, not batches of basic models.

Finally, NEMA TP 2 contemplates more compliance testing than either part 430 or part 431. The sampling plan under part 430 prescribes no minimum size for a test sample, and the minimum sample size under part 431 is five units. Under NEMA TP 2, a manufacturer must do continuous testing either of 100 percent of the units it manufactures or of a random sample of a statistically valid number of units (but not less than five per month). Manufacturers are of course free to voluntarily do any amount of testing they deem necessary to meet their own contractual and other business requirements. DOE is reluctant, however, to require this amount of testing, and to impose this burden as a legal mandate.

For the foregoing reasons, the Department is not proposing to adopt the sampling plan in NEMA TP 2. Nevertheless, the Department agrees with NEMA that the sampling plan proposed in the 1998 proposed rule, using a methodology similar to that in 10 CFR part 430, could impose a significant risk of false negatives, *i.e.*, compliant basic models found to be non-compliant. The Department

recognizes that there are inherent differences between the products regulated in part 430 and distribution transformers, and that these differences warrant a sampling plan for distribution transformers that is different from that in part 430. Manufacturers of electric motors had similar concerns, and DOE adopted a new sampling plan for determining a motor's efficiency in 10 CFR part 431.

DOE is proposing today to adopt both a sampling plan and alternative methods (other than actual testing) for manufacturers to use to determine the efficiency of distribution transformers, which are similar to requirements that DOE has prescribed for electric motors. Today's proposals are a substantial departure from the approaches proposed in the 1998 proposed rule and 1999 reopening notice. The Department believes they would require manufacturers to do substantially less testing than contemplated either by the earlier proposals or by NEMA TP 2, while at the same time ensuring that products comply with applicable efficiency standards.

Today's proposed sampling plan is designed to have a significantly higher probability than the 1998 proposed rule proposal that a basic model would be found in compliance with its rated value where it is in fact manufactured at that value, without incurring a probability for significant false positives, *i.e.*, non-complying models being found in compliance. Similar to the sampling plan for motors, today's proposal is predicated on the principle that the mean power loss of the sample must be equal to or smaller than the rated loss plus five percent of the rated loss divided by the square root of the number of units in the sample. This translates into the ''Represented Efficiency'' expression in today's proposed section 432.12. The tolerance of the motors plan is constant, however, while that of today's proposed plan decreases with increases in the sample size. The motors plan also has an additional requirement that the power loss of a single unit in the sample must not exceed the rated loss by more than 15 percent. Today's plan includes no such provision in large part because the tolerance in today's proposal decreases with increased sample size. The proposed plan provides the same probability of demonstrating compliance for all sample sizes for a basic model that is manufactured at the rated efficiency. Finally, because the confidence limit varies with the standard deviation of the population, under the proposed plan a very high probability exists that complying basic models that have relatively small variabilities would pass compliance testing, *i.e.*, be found in compliance with their rated values. For example, there is a 96.8 percent probability that a complying basic model with a standard deviation of 2.7 percent would pass compliance testing. Therefore, the manufacturer of such a basic model could design and manufacture the product at very close to its rated value, with little risk that it would fail compliance testing. A more thorough analysis of today's proposed sampling plan is set forth in NIST Technical Note 1456, ''Operating Characteristics of the Proposed Sampling Plans for Testing Distribution Transformers,'' which has been placed in the docket for this rulemaking and is publicly available at *http://www.eere.energy.gov/buildings/appliance_standards/commercial/dist_transformers.html*.

Today's proposed sampling plan also would limit the testing burden on manufacturers. As with the motors plan, it prescribes a minimum test sample size of five units except when fewer than that number of units is manufactured in a 180-day period. It also handles samples as small as one.

The key element that limits the test burden on manufacturers in today's proposed rule, however, is the proposal to allow manufacturers of distribution transformers to determine the efficiency of some of their transformers through use of alternative efficiency determination methods (AEDMs). An AEDM is a predictive mathematical model, developed from engineering analyses of design data and substantiated by actual test data, that represents the energy consumption characteristics of one or more basic models. Under today's proposal, after it substantiates the accuracy of an AEDM, the manufacturer can apply it to basic models to determine their efficiencies without testing them. The manufacturer would, however, have to determine the efficiency of at least five of its basic models, selected in accordance with criteria specified in the rule, through actual testing. The proposal would not permit a manufacturer to use the AEDM to rate any model that it had tested.

Today's proposal requires a manufacturer to substantiate an AEDM based on actual testing of at least five basic models. (These could be the same five basic models just referred to.) The manufacturer would have to apply the AEDM to these basic models, and could use the AEDM to determine the efficiency of other basic models only if, (1) the predicted total power loss for each of these basic models, calculated by applying the AEDM, is within five percent of the mean total power loss determined from the testing of that basic model, and (2) the average of the predicted total power loss for the tested basic models, calculated by applying the AEDM, is within three percent of the average of the total power loss determined from testing these basic models. In making this second determination, the manufacturer would calculate the average predicted power loss of each basic model as a percentage of the average measured power loss, which in turn it would treat as 100 percent. This expression of power losses as percentages is necessary in order for the manufacturer to assign equal weight to each basic model used to substantiate the AEDM.

The Department selected the above tolerances because the power loss predicted from an AEDM will differ from that predicted from testing sample units of a basic model, due to the variability of units within each model. The magnitude of such differences depends on the degree of variability, quantified as the standard deviation, and the sample size. As the number of units in each sample and the number of samples increases the difference between the calculated and measured values should decrease, but as a practical matter it never disappears. DOE understands that a difference on the order of one to three percent is the minimum that can be achieved. The maximum difference of plus or minus three percent proposed in today's rule is appropriate for populations consisting of at least five basic models with at least five units in each. This allowable difference is equal to the allowable measurement error in the test procedure specified in proposed section 432.11. The higher five-percent tolerance permitted for any single basic model allows for situations where units of a basic model have unusually high variability resulting in a relatively high standard deviation of four percent. This can result from factors such as variation in the materials used to produce the basic model and variability in the manufacturing process. Such factors can affect an entire production run for the basic model.

E. Enforcement Procedures

As it did in developing proposals for manufacturers to rate the efficiency of distribution transformers, DOE reviewed the provisions of 10 CFR parts 430 and 431 in formulating proposed enforcement procedures for this product. Parts 430 and 431 contain enforcement provisions that apply when DOE examines whether a basic model of a covered product complies with

efficiency requirements set forth in those parts. Each part allows for enforcement testing where necessary, and each includes a sampling plan for such testing. Neither the 1998 proposed rule nor the 1999 reopening notice addressed enforcement. The Department believes, however, that it is desirable to consider methods for manufacturers to use to rate their distribution transformers, and methods for enforcement testing, in conjunction with one another. Therefore, today's proposal includes proposed enforcement procedures, including a sampling plan and other provisions for enforcement testing. Substantial elements of these procedures are drawn from part 431 and their application to distribution transformers should not be controversial, but the Department nevertheless welcomes comment on them. However, the provisions as to the number of units to be tested and the number of tests to be performed are not drawn from part 431, and the sampling plan was developed specifically for application to distribution transformers. These provisions reflect the fact that some basic models of distribution transformers are produced in limited quantities. The Department is particularly interested in receiving comments on these provisions.

The proposed enforcement sampling plan establishes detailed procedures for an enforcement action, and is similar to the enforcement sampling plans established in parts 430 and 431. All of these plans are based on a well established statistical method for obtaining a confidence interval on a mean, which first originated in Charles Stein, *A Two-sample Test For a Linear Hypothesis Whose Power is Independent of Variance*, 16 Annals of Mathematical Statistics 243–258 (1945). This procedure is discussed in Peter J. Bickel and Kjell A. Doksum, *Mathematical Statistics: Basic Ideas and Selected Topics* 158–159 (1977), for example. The sampling plan for enforcement testing included in part 430 covers both efficiency and energy consumption, and it is general. The enforcement sampling plan proposed here, in Appendix B to proposed part 432, has been adapted from part 430, but has been simplified to address only efficiency testing. It also includes provisions to allow tests of very small samples. These provisions assure consistency with today's proposed sampling plan for compliance testing, discussed above.

The proposed enforcement sampling plan is based on a *t*-test. The Department believes that the *t*-test is well suited for use in enforcement testing in that: (1) The *t*-test is insensitive to the exact nature of the distribution of performance of the item being evaluated, and (2) the risk of a false finding against a manufacturer can be set, by design, to a negligible level.

The nature of the distribution of efficiency performance may be at issue for some basic models of distribution transformers. Some of them are produced in small quantities, and it is difficult to establish with confidence an accurate distribution of efficiency performance for very small test samples. Moreover, even some basic models produced in relatively large quantities may not have a normally distributed efficiency performance. Although the *t*-test assumes a normal distribution, it is insensitive to departures from that assumption. The *t*-test is a test on a sample mean that is an average of independent values obtained from a random sample. Since sums of arbitrary, independent random values tend to have a distribution that is almost normal, *i.e.* is very close to normal, even if the values themselves are not normally distributed, the *t*-test is not strongly influenced by the exact form of the underlying distribution of these values (in this case transformer efficiencies).

Under parts 430 and 431, the test results obtained during enforcement testing may result in serious adverse actions against a manufacturer. For example, the manufacturer must cease distribution and sale of any basic model that the Department finds to be out of compliance, and the Department can assess a civil penalty for such noncompliance. Thus, the risk to a manufacturer of a false determination of noncompliance during an enforcement action is set, by design, to a negligible level. Today's proposed sampling plan for enforcement is based on a 97.5 percent statistical confidence, resulting in a risk of a false determination of noncompliance of not greater than 2.5 percent.

As mentioned above, some basic models of distribution transformers may have limited production, and thus, few units may be available for testing. The proposed sampling plan for compliance testing contemplates that a basic model would be in compliance with its rated efficiency so long as the mean, measured efficiency of the compliance test sample of the basic model meets the following test:

$$\overline{X} \geq \frac{100}{1+\left(1+\frac{0.05}{\sqrt{n}}\right)\left(\frac{100}{RE}-1\right)}$$

where RE is the rated efficiency and *n* is the number of units tested. Thus, the Department could find a basic model in compliance with its rated efficiency even if the mean efficiency of the test sample is less than the rated efficiency. This ''threshold efficiency'' establishes a reasonable lower control limit for compliance testing when very few units are available for testing.

Under the proposed plan for enforcement testing, DOE would test a random sample and would calculate the mean, $\bar{X}$, standard deviation, S, standard error in the mean, SE($\bar{X}$), and a sample size discount, SSD(m). In determining compliance with a rated efficiency, DOE would assume that the tested units are drawn from a population of transformers for which the mean efficiency is equal to or greater than the rated efficiency. Using the value for t at the 97.5 percentile of the t-distribution for n tests, that is for n–1 degrees of freedom, the probability of obtaining a mean efficiency

$$\overline{X} \geq RE - tSE(\overline{X})$$

is not less than 97.5 percent. The procedure recommends a lower control limit,

$$LCL = SSD(m) - tSE(\overline{X})$$

where the sample size discount,

$$SSD(m) = \frac{100}{1+\left(1+\frac{.05}{\sqrt{m}}\right)\left(\frac{100}{RE}-1\right)}$$

is included to be consistent with the provisions, just discussed, of the proposed plan for compliance testing. Here m is the number of units available for testing, which may not exceed 20 and can range between 1 and 20 under the proposed provisions for enforcement testing. Provided the mean efficiency obtained from the random sample is not less than the lower control limit and the condition

$$n \geq \left[\frac{tS(105-0.05RE)}{RE(5-0.05RE)}\right]^2$$

holds, the product is compliant.

In any statistical test there is some probability of a false conclusion. Under the proposed sampling plan for enforcement, the probability that the mean efficiency for a random sample drawn from a compliant population of transformers would fall below the lower control limit, and hence the risk of incorrectly concluding that the basic model is in noncompliance, is not greater than 2.5 percent. Furthermore, if both the proposed compliance and enforcement plans were applied to the same sample test units, the risk of a false determination of noncompliance with a represented efficiency under the

proposed enforcement testing plan is not greater than 2.5 percent for units tested and found to be in compliance with that same represented efficiency under the compliance testing plan. Finally, as in parts 430 and 431, today's proposed rule provides that after DOE determines a basic model to be in noncompliance through testing under the enforcement sampling plan, DOE will conduct additional testing if the manufacturer so requests, and such testing could result in a determination of compliance. This testing over and above that required under the enforcement sampling plan would further reduce the likelihood of a false determination of noncompliance and would thus allow a manufacturer to reduce the risk of a false conclusion.

F. New Part 432

Section 346 of EPCA, 42 U.S.C. 6317, addresses energy conservation requirements for distribution transformers, high-intensity discharge lamps and small electric motors. As set forth in the 1998 proposed rule, 63 FR at 63367, the Department is proposing to add a new Part 432 which would include efficiency regulations the Department adopts for these products. In this notice, the Department is proposing to adopt, and place in Part 432, regulations as to efficiency testing for distribution transformers. At such time as the Department adopts energy conservation standards and other requirements for distribution transformers, or requirements for high-intensity discharge lamps or small electric motors, it also intends to place them in Part 432.

III. Procedural Requirements

A. Review Under Executive Order 12866

The Office of Information and Regulatory Affairs of the Office of Management and Budget (OMB) has determined that today's regulatory action is not a ''significant regulatory action'' under Executive Order 12866, ''Regulatory Planning and Review,'' 58 FR 51735 (October 4, 1993). Accordingly, this action was not subject to review under the Executive Order.

B. Review Under the Regulatory Flexibility Act

The Regulatory Flexibility Act (5 U.S.C. 601 *et seq.*) requires preparation of an initial regulatory flexibility analysis for any rule that by law must be proposed for public comment, unless the agency certifies that the rule, if promulgated, will not have a significant economic impact on a substantial number of small entities. As required by Executive Order 13272, ''Proper Consideration of Small Entities in Agency Rulemaking,'' 67 FR 53461 (August 16, 2002), DOE published procedures and policies on February 19, 2003, to ensure that the potential impacts of its rules on small entities are properly considered during the rulemaking process (68 FR 7990). DOE has made its procedures and policies available on the Office of General Counsel's Web site: *http://www.gc.doe.gov*.

DOE reviewed today's rule under the provisions of the Regulatory Flexibility Act and the procedures and policies published on February 19, 2003, and, for reasons that follow, certifies that the proposed rule, if adopted as a final rule, will not impose a significant economic impact on a substantial number of small entities.

In another rulemaking, the Department is in the early stages of considering the adoption of mandatory energy conservation standards for distribution transformers. Today's proposed rule would prescribe test procedures that will be used to determine what standards, if any, DOE would adopt in that rulemaking, and it also contains certain related provisions. The proposed rule would likely become generally applicable only upon adoption of standards. Unless and until DOE adopts such standards, the Department anticipates that manufacturers will use the test procedures to voluntarily test their transformers and provide to DOE efficiency information about their products. But until energy conservation standards are adopted, no entities, small or large, would be required to comply with these test procedures, or with the other parts of today's proposed rule. Therefore, DOE believes today's proposed rule would not have a ''significant economic impact on a substantial number of small entities,'' and the preparation of a regulatory flexibility analysis is neither required nor warranted at this point.

If the Department adopts standards for distribution transformers, DOE's regulations would require manufacturers to produce transformers that meet the standards. That requirement would have the effect of also requiring manufacturers to comply with the provisions in today's proposed rule (if it is subsequently adopted as a final rule), with respect to the distribution transformers that are subject to the standards. At that point, today's proposed rule would become binding on, and could have an economic impact on, small entities. But the nature and extent of any such impact cannot be assessed until the Department develops standards. Until then, neither the identity nor the proportion of distribution transformers covered by standards can be known. Since today's proposed rule would only be mandatory as to transformers covered by standards, only when that information is known will it be possible to determine what if any burdens the proposed rule would impose on small entities. In light of these circumstances, at an appropriate point in conjunction with the standards rulemaking, the Department will conduct further review under the Regulatory Flexibility Act.

Accordingly, DOE has not prepared a regulatory flexibility analysis for this rulemaking. DOE will transmit the certification and supporting statement of factual basis to the Chief Counsel for Advocacy of the Small Business Administration for review pursuant to 5 U.S.C. 605(b).

C. Review Under the Paperwork Reduction Act

Today's proposed rule contains certain record-keeping requirements. For example, proposed § 432.12(a)(4)(ii) would require manufacturers to have records as to AEDMs available for DOE inspection, and proposed § 6.0 of Appendix A to Subpart B would require maintenance of calibration records. But for the reasons explained in Section III. B. above, unless and until the Department requires manufacturers to comply with energy conservation standards for distribution transformers, no manufacturer would be required to comply with these record-keeping provisions. Therefore, today's notice of proposed rulemaking would not impose any new reporting requirements requiring clearance by OMB under the Paperwork Reduction Act, 44 U.S.C. 3501 *et seq.*

The Department recognizes, however, that if it adopts standards for distribution transformers, once the standards become operative manufacturers will become subject to the record-keeping requirements in today's proposed rule (if it has been adopted in a final rule). Prior to that time, therefore, these requirements, if covered by the Paperwork Reduction Act, must be reviewed and approved by OMB. In addition, in conjunction with proposing any standards for transformers, the Department may propose additional reporting and/or record-keeping requirements for this product that are similar to requirements already in place for consumer products in 10 CFR 430.62 and for electric motors in 10 CFR 431.123 and 431.124. Any such additional requirements also may be subject to clearance under the

Paperwork Reduction Act. The Department anticipates a Paperwork Reduction Act submission that will cover any such additional requirements and the information collection requirements in today's proposed rule.

For these reasons, the Department will comply with the Paperwork Reduction Act with respect to the record-keeping requirements in today's rule at the appropriate point in conjunction with the standards development rulemaking. DOE nonetheless invites public comment on the collections of information proposed today.

D. Review Under the National Environmental Policy Act

In this rulemaking, DOE proposes to adopt test procedures and related provisions for distribution transformers. The test procedures would be used initially for the purpose of considering the adoption of energy conservation standards for transformers, and DOE would require their use only if standards are subsequently adopted. The proposed test procedures will not affect the quality or distribution of energy and, therefore, will not result in any environmental impacts. DOE, therefore, determined that this rule falls into a class of actions that are categorically excluded from review under the National Environmental Policy Act of 1969 (42 U.S.C. 4321 *et seq.*) and the Department's implementing regulations at 10 CFR part 1021. More specifically, today's rule is covered by the Categorical Exclusion in paragraph A6 to subpart D, 10 CFR part 1021. Accordingly, neither an environmental assessment nor an environmental impact statement is required.

E. Review Under Executive Order 13132

Executive Order 13132, ''Federalism,'' 64 FR 43255 (August 4, 1999) imposes certain requirements on agencies formulating and implementing policies or regulations that preempt State law or that have federalism implications. The Executive Order requires agencies to examine the constitutional and statutory authority supporting any action that would limit the policymaking discretion of the States and carefully assess the necessity for such actions. The Executive Order also requires agencies to have an accountable process to ensure meaningful and timely input by State and local officials in the development of regulatory policies that have federalism implications. On March 14, 2000, DOE published a statement of policy describing the intergovernmental consultation process it will follow in the development of such regulations (65 FR 13735). DOE has examined today's proposed rule and has determined that it does not preempt State law and does not have a substantial direct effect on the States, on the relationship between the national government and the States, or on the distribution of power and responsibilities among the various levels of government. No further action is required by Executive Order 13132.

F. Review Under Executive Order 12988

With respect to the review of existing regulations and the promulgation of new regulations, section 3(a) of Executive Order 12988, ''Civil Justice Reform'' (61 FR 4729, February 7, 1996), imposes on Federal agencies the general duty to adhere to the following requirements: (1) Eliminate drafting errors and ambiguity; (2) write regulations to minimize litigation; and (3) provide a clear legal standard for affected conduct rather than a general standard and promote simplification and burden reduction. Section 3(b) of Executive Order 12988 specifically requires that Executive agencies make every reasonable effort to ensure that the regulation: (1) Clearly specifies the preemptive effect, if any; (2) clearly specifies any effect on existing Federal law or regulation; (3) provides a clear legal standard for affected conduct while promoting simplification and burden reduction; (4) specifies the retroactive effect, if any; (5) adequately defines key terms; and (6) addresses other important issues affecting clarity and general draftsmanship under any guidelines issued by the Attorney General. Section 3(c) of Executive Order 12988 requires Executive agencies to review regulations in light of applicable standards in section 3(a) and section 3(b) to determine whether they are met or it is unreasonable to meet one or more of them. DOE has completed the required review and determined that, to the extent permitted by law, this proposed rule meets the relevant standards of Executive Order 12988.

G. Review Under the Unfunded Mandates Reform Act of 1995

Title II of the Unfunded Mandates Reform Act of 1995 (Pub. L. 104–4) (UMRA) requires each Federal agency to assess the effects of Federal regulatory actions on State, local, and tribal governments and the private sector. With respect to a proposed regulatory action that may result in the expenditure by State, local and tribal governments, in the aggregate, or by the private sector of $100 million or more (adjusted annually for inflation), section 202 of UMRA requires a Federal agency to publish estimates of the resulting costs, benefits, and other effects on the national economy. (2 U.S.C. 1532(a), (b)) UMRA also requires a Federal agency to develop an effective process to permit timely input by elected officers of State, local, and tribal governments on a proposed ''significant intergovernmental mandate,'' and requires an agency plan for giving notice and opportunity for timely input to potentially affected small governments before establishing any requirements that might significantly or uniquely affect small governments. On March 18, 1997, DOE published a statement of policy on its process for intergovernmental consultation under UMRA (62 FR 12820) (also available at *http://www.gc.doe.gov*). The proposed rule published today does not provide for any Federal mandate likely to result in an aggregate expenditure of $100 million or more. Therefore, the UMRA does not require a cost benefit analysis of today's proposal.

H. Review Under the Treasury and General Government Appropriations Act, 1999

Section 654 of the Treasury and General Government Appropriations Act, 1999 (Pub. L. 105–277) requires Federal agencies to issue a Family Policymaking Assessment for any rule that may affect family well-being. This proposed rule would not have any impact on the autonomy or integrity of the family as an institution. Accordingly, DOE has concluded that it is not necessary to prepare a Family Policymaking Assessment.

I. Review Under Executive Order 12630

DOE has determined pursuant to Executive Order 12630, ''Governmental Actions and Interference with Constitutionally Protected Property Rights,'' 53 FR 8859 (March 18, 1988) that this proposed rule would not result in any takings which might require compensation under the Fifth Amendment to the United States Constitution.

J. Review Under the Treasury and General Government Appropriations Act, 2001

The Treasury and General Government Appropriations Act, 2001 (44 U.S.C. 3516, note) provides for agencies to review most disseminations of information to the public under guidelines established by each agency pursuant to general guidelines issued by OMB. OMB's guidelines were published at 67 FR 8452 (February 22, 2002), and DOE's guidelines were published at 67 FR 62446 (October 7, 2002). DOE has

reviewed today's notice under the OMB and DOE guidelines and has concluded that it is consistent with applicable policies in those guidelines.

K. Review Under Executive Order 13211

Executive Order 13211, ''Actions Concerning Regulations That Significantly Affect Energy Supply, Distribution, or Use,'' 66 FR 28355 (May 22, 2001) requires Federal agencies to prepare and submit to the Office of Information and Regulatory Affairs (OIRA), Office of Management and Budget, a Statement of Energy Effects for any proposed significant energy action. A ''significant energy action'' is defined as any action by an agency that promulgated or is expected to lead to promulgation of a final rule, and that: (1) Is a significant regulatory action under Executive Order 12866, or any successor order; and (2) is likely to have a significant adverse effect on the supply, distribution, or use of energy, or (3) is designated by the Administrator of OIRA as a significant energy action. For any proposed significant energy action, the agency must give a detailed statement of any adverse effects on energy supply, distribution, or use should the proposal be implemented, and of reasonable alternatives to the action and their expected benefits on energy supply, distribution, and use. Today's regulatory action is not a significant regulatory action under Executive Order 12866. Moreover, it would not have a significant adverse effect on the supply, distribution, or use of energy. Therefore, it is not a significant energy action, and DOE has not prepared a Statement of Energy Effects.

L. Review Under Section 32 of the Federal Energy Administration Act of 1974

Under section 301 of the Department of Energy Organization Act (Pub. L. 95–91), the Department of Energy must comply with section 32 of the Federal Energy Administration Act of 1974, as amended by the Federal Energy Administration Authorization Act of 1977. (15 U.S.C. 788) Section 32 provides in part that, where a proposed rule contains or involves use of commercial standards, the rulemaking must inform the public of the use and background of such standards.

The rule proposed in this notice incorporates testing methods contained in the following commercial standards: (1) IEEE Standard C57.12.90–1999, ''IEEE Standard Test Code for Liquid-Immersed Distribution, Power and Regulating Transformers and IEEE Guide for Short Circuit Testing of Distribution and Power Transformers,'' (2) IEEE Standard C57.12.91–2001, ''IEEE Standard Test Code for Dry-Type Distribution and Power Transformers,'' (3) IEEE Standard C57.12.00–2000, ''IEEE Standard General Requirements for Liquid-Immersed Distribution, Power and Regulating Transformers,'' (4) IEEE Standard C57.12.01–1998, ''IEEE Standard General Requirements for Dry-Type Distribution and Power Transformers Including those with Solid Cast and/or Resin Encapsulated Windings,'' and (5) NEMA Standards Publication No. TP 2–1998, ''Standard Test Method for Measuring the Energy Consumption of Distribution Transformers.'' The Department has evaluated these standards and is unable to conclude whether they fully comply with the requirements of section 32(b) of the Federal Energy Administration Act, *i.e.*, they were developed in a manner that fully provides for public participation, comment and review.

As required by section 32(c) of the Federal Energy Administration Act, of 1974, as amended, DOE will consult with the Attorney General and the Chairman of the Federal Trade Commission, prior to prescribing a final rule, concerning the impact on competition of requiring use of methods contained in these standards to test distribution transformers.

IV. Public Participation

A. Attendance at Public Meeting

The time and date of the public meeting are listed in the DATES section at the beginning of this notice of proposed rulemaking. The public meeting will be held at the U.S. Department of Energy, Forrestal Building, Room 1E–245, 1000 Independence Avenue, SW., Washington, DC, 20585. To attend the public meeting, please notify Ms. Brenda Edwards-Jones at (202) 586–2945. Foreign nationals visiting DOE Headquarters are subject to advance security screening procedures, requiring a 30-day advance notice. Any foreign national wishing to participate in the meeting should advise DOE of this fact as soon as possible by contacting Ms. Brenda Edwards-Jones to initiate the necessary procedures.

B. Procedure for Submitting Requests To Speak

Any person who has an interest in today's notice, or who is a representative of a group or class of persons that has an interest in these issues, may request an opportunity to make an oral presentation. Such persons may hand-deliver requests to speak, along with a computer diskette or CD in WordPerfect, Microsoft Word, PDF, or text (ASCII) file format to the address shown in the **ADDRESSES** section at the beginning of this supplemental notice of proposed rulemaking between the hours of 9 a.m. and 4 p.m., Monday through Friday, except Federal holidays. Requests may also be sent by mail or e-mail to: *Brenda.Edwards-Jones@ee.doe.gov.*

Persons requesting to speak should briefly describe the nature of their interest in this rulemaking and provide a telephone number for contact. The Department requests persons selected to be heard to submit an advance copy of their statements at least two weeks before the public meeting. At its discretion, DOE may permit any person who cannot supply an advance copy of their statement to participate, if that person has made advance alternative arrangements with the Building Technologies Program. The request to give an oral presentation should ask for such alternative arrangements.

C. Conduct of Public Meeting

The Department will designate a DOE official to preside at the public meeting and may also use a professional facilitator to aid discussion. The meeting will not be a judicial or evidentiary-type public hearing, but DOE will conduct it in accordance with 5 U.S.C. 553 and section 336 of EPCA. A court reporter will be present to record the proceedings and prepare a transcript. The Department reserves the right to schedule the order of presentations and to establish the procedures governing the conduct of the public meeting. After the public meeting, interested parties may submit further comments on the proceedings as well as on any aspect of the rulemaking until the end of the comment period.

The public meeting will be conducted in an informal, conference style. The Department will present summaries of comments received before the public meeting, allow time for presentations by participants, and encourage all interested parties to share their views on issues affecting this rulemaking. Each participant will be allowed to make a prepared general statement (within time limits determined by DOE), before the discussion of specific topics. The Department will permit other participants to comment briefly on any general statements.

At the end of all prepared statements on a topic, DOE will permit participants to clarify their statements briefly and comment on statements made by others. Participants should be prepared to answer questions by DOE and by other

participants concerning these issues. Department representatives may also ask questions of participants concerning other matters relevant to this rulemaking. The official conducting the public meeting will accept additional comments or questions from those attending, as time permits. The presiding official will announce any further procedural rules or modification of the above procedures that may be needed for the proper conduct of the public meeting.

The Department will make the entire record of this proposed rulemaking, including the transcript from the public meeting, available for inspection at the U.S. Department of Energy, Forrestal Building, Room 1J–018 (Resource Room of the Building Technologies Program), 1000 Independence Avenue, SW., Washington, DC 20585, (202) 586–9127, between 9 a.m. and 4 p.m., Monday through Friday, except Federal holidays. Any person may buy a copy of the transcript of the public hearing proceedings from the transcribing reporter.

D. Submission of Comments

The Department will accept comments, data, and information regarding the proposed rule before or after the public meeting, but no later than the date provided at the beginning of this notice of proposed rulemaking. Please submit comments, data, and information electronically. Send them to the following e-mail address: *DistTransformersTP-SNOPR@ee.doe.gov.* Submit electronic comments in WordPerfect, Microsoft Word, PDF, or text (ASCII) file format and avoid the use of special characters or any form of encryption. Comments in electronic format should be identified by the docket number EE-TP–98–550 and/or RIN number, and wherever possible carry the electronic signature of the author. Absent an electronic signature, comments submitted electronically must be followed and authenticated by submitting the signed original paper document. No telefacsimiles (faxes) will be accepted.

According to 10 CFR 1004.11, any person submitting information that he or she believes to be confidential and exempt by law from public disclosure should submit two copies: one copy of the document including all the information believed to be confidential, and one copy of the document with the information believed to be confidential deleted. The Department of Energy will make its own determination about the confidential status of the information and treat it according to its determination.

Factors of interest to the Department when evaluating requests to treat submitted information as confidential include: (1) A description of the items; (2) whether and why such items are customarily treated as confidential within the industry; (3) whether the information is generally known by or available from other sources; (4) whether the information has previously been made available to others without obligation concerning its confidentiality; (5) an explanation of the competitive injury to the submitting person which would result from public disclosure; (6) when such information might lose its confidential character due to the passage of time; and (7) why disclosure of the information would be contrary to the public interest.

List of Subjects in 10 CFR Part 432

Administrative practice and procedure, Energy conservation, Distribution transformers.

The Secretary of Energy has approved publication of today's rule.

Issued in Washington, DC on May 26, 2004.

David K. Garman,

Assistant Secretary, Energy Efficiency and Renewable Energy.

For the reasons set forth in the preamble, Chapter II of Title 10, Code of Federal Regulations, is proposed to be amended by adding a new Part 432 to read as set forth below.

PART 432—ENERGY CONSERVATION PROGRAM FOR DISTRIBUTION TRANSFORMERS

Subpart A—General Provisions

Sec.

432.1 Purpose and scope.
432.2 Definitions.

Subpart B—Distribution Transformers

432.10 Definitions.
432.11 Test procedures for measuring energy consumption of distribution transformers.
432.12 Manufacturer's determination of efficiency for distribution transformers.
432.13 Enforcement testing for distribution transformers.
Appendix A to Subpart B of Part 432—Uniform Test Method for Measuring the Energy Consumption of Distribution Transformers
Appendix B to Subpart B of Part 432—Sampling Plan for Enforcement Testing

Subpart C—[Reserved]

Subpart D—[Reserved]

Authority: 42 U.S.C. 6317.

Subpart A—General Provisions

§ 432.1 Purpose and scope.

This part contains energy conservation requirements that the Department has promulgated pursuant to section 346 of EPCA, 42 U.S.C. 6317.

§ 432.2 Definitions.

The following definitions apply for purposes of this part:

Act means the Energy Policy and Conservation Act of 1975, as amended, 42 U.S.C. 6291–6317.

DOE or *the Department* means the Department of Energy.

EPCA means the Energy Policy and Conservation Act of 1975, as amended, 42 U.S.C. 6291–6317.

Secretary means the Secretary of the Department of Energy.

Subpart B—Distribution Transformers

§ 432.10 Definitions.

The following definitions apply for purposes of this subpart:

Autotransformer means a transformer that:

(1) Has one physical winding that consists of a series winding part and a common winding part;

(2) Has no isolation between its primary and secondary circuits; and

(3) During step-down operation, has a primary voltage that is equal to the total of the series and common winding voltages, and a secondary voltage that is equal to the common winding voltage.

Basic model means a group of distribution transformers manufactured by a single manufacturer, that have the same insulation type (*i.e.*, liquid-immersed or dry-type), have the same number of phases (*i.e.*, single or three), have the same standard kVA rating, and do not have any differentiating electrical, physical or functional features that affect energy consumption.

Distribution transformer means a transformer with a primary voltage of equal to or less than 35 kV, a secondary voltage equal to or less than 600 V, a frequency of 55–65 Hz, and a capacity of 10 kVA to 2500 kVA for liquid-immersed units and 15 kVA to 2500 kVA for dry-type units, and does not include the following types of transformers:

(1) Autotransformer;

(2) Drive (isolation) transformer;

(3) Grounding transformer;

(4) Harmonic mitigating transformer;

(5) K-Factor Transformer;

(6) Machine-Tool (Control) Transformer;

(7) Non-ventilated Transformer;

(8) Rectifier Transformer;

(9) Regulating Transformer;

(10) Sealed Transformer;
(11) Special-Impedance Transformer;
(12) Testing Transformer;
(13) Transformer with Tap Range greater than 15 percent;
(14) Uninterruptible Power Supply Transformer; or
(15) Welding Transformer.

Drive (isolation) transformer means a transformer that:
(1) Isolates an electric motor from the line;
(2) Accommodates the added loads of drive-created harmonics; and
(3) Is designed to withstand the additional mechanical stresses resulting from an alternating current adjustable frequency motor drive or a direct current motor drive.

Dry-type distribution transformer means a distribution transformer in which the core and coil assembly is immersed in a gaseous or dry-compound insulating medium.

Efficiency means the ratio of the useful power output to the total power input.

Excitation current or *no-load current* means the current that flows in any winding used to excite the transformer when all other windings are open-circuited.

Grounding transformer means a three-phase transformer intended primarily to provide a neutral point for system-grounding purposes, either by means of:
(1) A grounded wye primary winding and a delta secondary winding; or
(2) An autotransformer with a zig-zag winding arrangement.

Harmonic mitigating transformer means a transformer designed to cancel or reduce the harmonics drawn by computer equipment and other non-linear power electronic loads.

K-Factor transformer means a transformer with a K-Factor of 13 or greater that is designed to tolerate the additional eddy-current losses resulting from harmonics drawn by non-linear loads, usually when the ratio of the non-linear load to the linear load is greater than 50 percent.

Liquid-immersed distribution transformer means a distribution transformer in which the core and coil assembly is immersed in an insulating liquid.

Load loss means, for a distribution transformer, those losses incident to a specified load carried by the transformer, including losses in the windings as well as stray losses in the conducting parts of the transformer. It does not include no-load losses.

Low-voltage distribution transformer means a dry-type distribution transformer with a rated primary voltage of 600 V or less.

Machine-tool (control) transformer means a transformer that is equipped with a fuse or other over current protection device, and is generally used for the operation of a solenoid, contactor, relay, portable tool, or localized lighting.

Medium-voltage distribution transformer means a dry-type distribution transformer with rated primary voltage between 601 V and 35 kV.

No-load loss means those losses that are incident to the excitation of the transformer.

Non-ventilated transformer means a transformer constructed so as to prevent external air circulation through the coils of the transformer while operating at zero gauge pressure.

Phase angle means the angle between two phasors, where the two phasors represent progressions of periodic waves of either:
(1) Two voltages;
(2) Two currents; or
(3) A voltage and a current of an alternating current circuit.

Phase angle correction means the adjustment (correction) of measurement data to negate the effects of phase angle error.

Phase angle error means incorrect displacement of the phase angle, introduced by the components of the test equipment.

Rectifier transformer means a transformer that operates at the fundamental frequency of an alternating-current system and that is designed to have one or more output windings connected to a rectifier.

Reference temperature means 20 °C for no-load loss, 55 °C for liquid-immersed distribution transformers at 50% load, and 75 °C for both low-voltage and medium-voltage dry-type distribution transformers, at 35% load and 50% load, respectively. It is the temperature at which the transformer losses must be determined, and to which such losses must be corrected if testing is done at a different point. (These temperatures are specified in the test method in Appendix A to this part.)

Regulating Transformer means a transformer that varies the voltage, the phase angle, or both voltage and phase angle, of an output circuit and compensates for fluctuation of load and input voltage, phase angle or both voltage and phase angle.

Sealed Transformer means a transformer designed to remain hermetically sealed under specified conditions of temperature and pressure.

Special-Impedance Transformer means any transformer built to operate at an impedance outside of the normal impedance range for that transformer's kVA rating. The normal impedance range for each kVA rating for liquid-immersed and dry-type transformers is shown in Tables 1 and 2, respectively.

TABLE 1.—NORMAL IMPEDANCE RANGES FOR LIQUID-IMMERSED TRANSFORMERS

Single-phase transformers		Three-phase transformers	
kVA	Impedance (%)	kVA	Impedance (%)
10	1.0–4.5	15	1.0–4.5
15	1.0–4.5	30	1.0–4.5
25	1.0–4.5	45	1.0–4.5
37.5	1.0–4.5	75	1.0–5.0
50	1.5–4.5	112.5	1.2–6.0
75	1.5–4.5	150	1.2–6.0
100	1.5–4.5	225	1.2–6.0
167	1.5–4.5	300	1.2–6.0
250	1.5–6.0	500	1.5–7.0
333	1.5–6.0	750	5.0–7.5
500	1.5–7.0	1000	5.0–7.5
667	5.0–7.5	1500	5.0–7.5
833	5.0–7.5	2000	5.0–7.5
		2500	5.0–7.5

TABLE 2.—NORMAL IMPEDANCE RANGES FOR DRY-TYPE TRANSFORMERS

Single-phase transformers		Three-phase transformers	
kVA	Impedance (%)	kVA	Impedance (%)
15	1.5–6.0	15	1.5–6.0
25	1.5–6.0	30	1.5–6.0
37.5	1.5–6.0	45	1.5–6.0
50	1.5–6.0	75	1.5–6.0
75	2.0–7.0	112.5	1.5–6.0
100	2.0–7.0	150	1.5–6.0
167	2.5–8.0	225	3.0–7.0
250	3.5–8.0	300	3.0–7.0
333	3.5–8.0	500	4.5–8.0
500	3.5–8.0	750	5.0–8.0
667	5.0–8.0	1000	5.0–8.0
833	5.0–8.0	1500	5.0–8.0
		2000	5.0–8.0
		2500	5.0–8.0

Temperature Correction means the mathematical correction(s) of measurement data, obtained when a transformer is tested at a temperature that is different from the reference temperature, to the value(s) that would have been obtained if the transformer had been tested at the reference temperature.

Test Current means the current of the electrical power supplied to the transformer under test.

Test Frequency means the frequency of the electrical power supplied to the transformer under test.

Test Voltage means the voltage of the electrical power supplied to the transformer under test.

Testing Transformer means a transformer used in a circuit to produce a specific voltage or current for the purpose of testing electrical equipment. This type of transformer is also commonly known as an Instrument Transformer.

Total Loss means the sum of the no-load loss and the load loss for a transformer.

Transformer means a static electric device consisting of a winding or two or more coupled windings, with a magnetic core, for introducing mutual coupling between electric circuits.

Transformer with Tap Range greater than 15 percent means a transformer with a tap range in the primary winding greater than the range accomplished with six, 2.5-percent taps, 3 above and 3 below the rated primary voltage (e.g., 6 times 2.5 percent = 15 percent).

Uninterruptible Power Supply Transformer means a transformer that supplies power to an uninterruptible power system, which in turn supplies power to loads that are sensitive to power failure, power sags, over voltage, switching transients, line noise, and other power quality factors.

Waveform Correction means the adjustment(s) (mathematical correction(s)) of measurement data obtained with a test voltage that is non-sinusoidal, to a value(s) that would have been obtained with a sinusoidal voltage.

Welding Transformer means a transformer designed for use in arc welding equipment or resistance welding equipment.

§ 432.11 Test procedures for measuring energy consumption of distribution transformers.

The test procedures for measuring the energy efficiency of distribution transformers for purposes of EPCA are specified in Appendix A to this subpart (''Appendix A'').

§ 432.12 Manufacturer's determination of efficiency for distribution transformers.

When a manufacturer or other party (both of which this section refers to as a ''manufacturer'') determines the efficiency of a distribution transformer in order to comply with an obligation imposed on it by or pursuant to Part C of Title III of EPCA, 42 U.S.C. 6311–6317, this section applies. This section does not apply to enforcement testing conducted pursuant to § 432.13 of this part.

(a) *Methods used to determine efficiency.*

(1) *General Requirements.* A manufacturer must determine the efficiency of each basic model of distribution transformer either by testing in accordance with § 432.11 of this part and paragraph (b)(2) of this section, or by application of an alternative efficiency determination method (AEDM) that meets the requirements of paragraphs (a)(2) and (a)(3) of this section; provided, however, that a manufacturer may use an AEDM to determine the efficiency of one or more of its untested basic models only if it determines the efficiency of at least five of its other basic models (selected in accordance with paragraph (b)(1) of this section) through actual testing.

(2) *Alternative efficiency determination method.* A manufacturer may apply an AEDM to a basic model only if:

(i) The AEDM has been derived from a mathematical model that represents the electrical characteristics of that basic model;

(ii) The AEDM is based on engineering and statistical analysis, computer simulation or modeling, or other analytic evaluation of performance data; and

(iii) In applying the AEDM to distribution transformers, the manufacturer uses the AEDM only for one or more of its basic models in one of the following groups of distribution transformers: low-voltage dry-type transformers, medium-voltage dry-type transformers, and liquid-immersed transformers.

(3) *Substantiation of an alternative efficiency determination method.* Before using an AEDM, the manufacturer must substantiate the AEDM's accuracy and reliability as follows:

(i) Apply the AEDM to at least five of the manufacturer's basic models that have been selected for testing in accordance with paragraph (b)(1) of this section, and calculate the power loss for each of these basic models;

(ii) Test at least five units of each of these basic models in accordance with the applicable test procedure and paragraph (b)(2) of this section, and determine the power loss for each of these basic models;

(iii) The predicted total power loss for each of these basic models, calculated by applying the AEDM pursuant to paragraph (a)(3)(i) of this section, must be within plus or minus five percent of

the mean total power loss determined from the testing of that basic model pursuant to paragraph (a)(3)(ii) of this section; and

(iv) Calculate for each of these basic models the percentage that its power loss calculated pursuant to paragraph (a)(3)(i) is of its power loss determined from testing pursuant to paragraph (a)(3)(ii), compute the average of these percentages, and that calculated average power loss, expressed as a percentage of the average power loss determined from testing, must be no less than 97 percent and no greater than 103 percent.

(4) *Subsequent verification of an AEDM.*

(i) Each manufacturer shall periodically select basic models representative of those to which it has applied an AEDM, and for each basic model selected shall either:

(A) Subject a sample of at least five units to testing in accordance with the applicable test procedure and paragraph (b)(2) of this section by an independent testing laboratory; or

(B) Have an independent state-registered professional engineer, who is qualified to perform an evaluation of distribution transformer efficiency in a highly competent manner and who is not an employee of the manufacturer, review the manufacturer's representations and certify that the results of the AEDM accurately represent the total power loss and efficiency of the basic model.

(ii) Each manufacturer that has used an AEDM under this section shall have available for inspection by the Department of Energy records showing: the method or methods used; the mathematical model, the engineering or statistical analysis, computer simulation or modeling, and other analytic evaluation of performance data on which the AEDM is based; complete test data, product information, and related information that the manufacturer has generated or acquired pursuant to paragraphs (a)(3) and (a)(4)(i) of this section; and the calculations used to determine the efficiency and total power losses of each basic model to which the AEDM was applied.

(iii) If requested by the Department, the manufacturer shall conduct simulations to predict the performance of particular basic models of distribution transformers specified by the Department, analyses of previous simulations conducted by the manufacturer, sample testing of basic models selected by the Department, or a combination of the foregoing.

(b) *Additional testing requirements.*

(1) *Selection of basic models for testing if an AEDM is to be applied.*

(i) A manufacturer must select basic models for testing in accordance with the following criteria:

(A) Two of the basic models must be among the five basic models with the highest unit volumes of production by the manufacturer in the prior year, or during the prior 12-calendar-month period beginning in 2003,[1] whichever is later;

(B) No two basic models should have the same combination of power and voltage ratings; and

(C) At least one basic model should be single-phase and at least one should be three-phase.

(ii) In any instance where it is impossible for a manufacturer to select basic models for testing in accordance with all of these criteria, the criteria shall be given priority in the order in which they are listed. Within the limits imposed by the criteria, basic models shall be selected randomly.

(2) *Selection of units for testing within a basic model.* For each basic model a manufacturer selects for testing, it shall select a sample of units at random and test them. The sample shall be comprised of production units of the basic model, or units that are representative of such production units. The sample size shall be not fewer than five units, except that when the manufacturer would produce fewer than five units of a basic model over a reasonable period of time (approximately 180 days), then it must test each unit. However, a manufacturer may not use a basic model with a sample size of fewer than five units to substantiate or verify an AEDM pursuant to paragraphs (a)(3) or (a)(4) of this section. In a test of compliance with a represented efficiency:

The average efficiency of the sample, $\bar{X}$, which is defined by

$$\overline{X} = \frac{1}{n}\sum_{i=1}^{n} X_i$$

where X_i is the measured efficiency of unit i and n is the number of units tested, must satisfy the condition:

$$\overline{X} \geq \frac{100}{1+\left(1+\frac{0.05}{\sqrt{n}}\right)\left(\frac{100}{RE}-1\right)}$$

where RE is the represented efficiency.

[1] When identifying these five basic models, any basic model that does not comply with Federal energy conservation standards for distribution transformers that may be in effect shall be excluded from consideration.

§ 432.13 Enforcement testing for distribution transformers.

(a) *Test notice.* Upon receiving information in writing, concerning the energy performance of a particular distribution transformer sold by a particular manufacturer or private labeler, which indicates that the transformer may not be in compliance with the applicable energy efficiency standard, or upon undertaking to ascertain the accuracy of the efficiency rating on the nameplate or in marketing materials for a distribution transformer, disclosed pursuant to this part, the Department may conduct testing of that equipment under this subpart by means of a test notice addressed to the manufacturer in accordance with the following requirements:

(1) The test notice procedure will only be followed after the Department has examined the underlying test data (or, where appropriate, data as to use of an AEDM) provided by the manufacturer and after the manufacturer has been offered the opportunity to meet with the Department to verify, as applicable, compliance with the applicable efficiency standard, or the accuracy of labeling information, or both. In addition, where compliance of a basic model was certified based on an AEDM, the Department shall have the discretion to pursue the provisions of § 432.12(a)(4)(iii) prior to invoking the test notice procedure. The Department shall be permitted to observe any reverification procedures undertaken pursuant to this subpart, and to inspect the results of such reverification.

(2) The Department will mail or deliver the test notice to the plant manager or other responsible official, as designated by the manufacturer.

(3) The test notice will specify the basic model to be selected for testing, the method of selecting the test sample, the date and time at which testing shall be initiated, the date by which testing is scheduled to be completed and the facility at which testing will be conducted. The test notice may also provide for situations in which the specified basic model is unavailable for testing, and may include alternative basic models. The specified basic model may be one either that the manufacturer has rated by actual testing or that it has rated by the use of an AEDM.

(4) The Department may require in the test notice that the manufacturer shall ship at his expense a reasonable number of units of a basic model specified in such test notice to a testing laboratory designated by the Department. The number of units of a basic model specified in a test notice shall not exceed twenty (20).

(5) Except as required or provided in paragraphs (a)(6) or (a)(7) of this section, initially the Department will test five units.

(6) Except as provided in paragraph (a)(7) of this section, if fewer than five units of a basic model are available for testing when the manufacturer receives the test notice, then

(i) DOE will test the available unit(s); or

(ii) If one or more other units of the basic model are expected to become available within six months, DOE may instead, at its discretion, test either:

(A) The available unit(s) and one or more of the other units that subsequently become available (up to a maximum of twenty); or

(B) Up to twenty of the other units that subsequently become available.

(7) Notwithstanding paragraphs (a)(5) and (a)(6) of this section, if testing of the available or subsequently available units of a basic model would be impractical, as for example where a basic model is very large, has unusual testing requirements, or has limited production, the Department may in its discretion decide to base the determination of compliance on the testing of fewer than the available number of units, if the manufacturer so requests and demonstrates that the criteria of this paragraph are met.

(8) When testing units under paragraphs (a)(5), (a)(6), or (a)(7) of this section, DOE shall perform the following number of tests:

(i) If DOE tests four or more units, it will test each unit once;

(ii) If DOE tests two or three units, it will test each unit twice; or

(iii) If DOE tests one unit, it will test that unit four times.

(9) Within five working days of the time the units are selected, the manufacturer shall ship the specified test units of the basic model to the testing laboratory.

(b) *Testing laboratory.* Whenever the Department conducts enforcement testing at a designated laboratory in accordance with a test notice under this section, the resulting test data shall constitute official test data for that basic model. Such test data will be used by the Department to make a determination of compliance or noncompliance.

(c) *Sampling.* The determination that a manufacturer's basic model complies with its labeled efficiency, or the applicable energy efficiency standard, shall be based on the testing conducted in accordance with the statistical sampling procedures set forth in Appendix B of this subpart and the test procedures specified for distribution transformers.

(d) *Test unit selection.* The Department shall select a batch, a batch sample, and test units from the batch sample in accordance with the following provisions of this paragraph and the conditions specified in the test notice.

(1) The batch may be subdivided by the Department utilizing criteria specified in the test notice.

(2) The Department will then randomly select a batch sample of up to 20 units from one or more subdivided groups within the batch. The manufacturer shall keep on hand all units in the batch sample until such time as the basic model is determined to be in compliance or non-compliance.

(3) The Department will randomly select individual test units comprising the test sample from the batch sample.

(4) All random selection shall be achieved by sequentially numbering all of the units in a batch sample and then using a table of random numbers to select the units to be tested.

(e) *Test unit preparation.*

(1) Prior to and during the testing, a test unit selected in accordance with paragraph (d) of this section shall not be prepared, modified, or adjusted in any manner unless such preparation, modification, or adjustment is allowed by the applicable Department of Energy test procedure.

(2) No quality control, testing, or assembly procedures shall be performed on a test unit, or any parts and sub-assemblies thereof, that is not performed during the production and assembly of all other units included in the basic model.

(3) A test unit shall be considered defective if such unit is inoperative or is found to be in noncompliance due to failure of the unit to operate according to the manufacturer's design and operating instructions. Defective units, including those damaged due to shipping or handling, shall be reported immediately to the Department. The Department shall authorize testing of an additional unit on a case-by-case basis.

(f) *Testing at manufacturer's option.*

(1) If a manufacturer's basic model is determined to be in noncompliance with the applicable energy performance standard at the conclusion of Department testing in accordance with the sampling plan specified in Appendix B of this subpart, the manufacturer may request that the Department conduct additional testing of the basic model according to procedures set forth in Appendix B of this subpart and the test procedures specified for distribution transformers.

(2) All units tested under this paragraph shall be selected and tested in accordance with the provisions given in paragraphs (a)(9), (b), (d) and (e) of this section.

(3) The manufacturer shall bear the cost of all testing conducted under this paragraph.

(4) The manufacturer shall cease distribution of the basic model tested under the provisions of this paragraph from the time the manufacturer elects to exercise the option provided in this paragraph until the basic model is determined to be in compliance. The Department may seek civil penalties for all units distributed during such period.

(5) If the additional testing results in a determination of compliance, a notice of allowance to resume distribution shall be issued by the Department.

Appendix A to Subpart B of Part 432—Uniform Test Method for Measuring the Energy Consumption of Distribution Transformers

1.0 Definitions

The definitions contained in §§ 432.2 and 432.10 are applicable to this Appendix A.

2.0 Accuracy Requirements

Equipment and methods for loss measurement shall be sufficiently accurate that measurement error will be limited to the values shown in Table 2.1.

TABLE 2.1—TEST SYSTEM ACCURACY REQUIREMENTS FOR EACH MEASURED QUANTITY

Measured quantity	Test system accuracy
Power Losses	± 3.0 %
Voltage	± 0.5 %
Current	± 0.5 %
Resistance	± 0.5 %
Temperature	± 1.0 °C

Only instrument transformers meeting the 0.3 metering accuracy class, or better, may be used under this test method.

3.0 Resistance Measurements

3.1 General Considerations

Measure or establish the winding temperature at the time of the winding resistance measurement.

Measure the direct current resistance (R_{dc}) of transformer windings by one of the methods outlined in section 3.3. The methods of section 3.5 must be used to correct load losses to the applicable reference temperature from the temperature at which they are measured. Observe precautions while taking measurements, such as those in section 3.4, in order to maintain measurement uncertainty limits specified in Table 2.1.

3.2 Temperature Determination of Windings and Pre-conditions for Resistance Measurement

Make temperature measurements in protected areas where the air temperature is

stable and there are no drafts. Determine the winding temperature (T_{dc}) for liquid-immersed and dry-type distribution transformers by the methods described in sections 3.2.1 and 3.2.2, respectively.

3.2.1 Liquid-Immersed Distribution Transformers

Record the winding temperature (T_{dc}) of liquid-immersed transformers as the average of top and bottom thermocouples or other temperature sensing devices applied to the outside of the transformer tank. The top sensor should be located at the level of the oil and the bottom sensor should be near the tank bottom or at the lower radiator header if applicable.

Make this determination under either of the following conditions:

(a) The windings have been under insulating liquid with no excitation and no current in the windings for four hours before the dc resistance is measured; or

(b) The temperature of the insulating liquid has stabilized, and the difference between the top and bottom temperature does not exceed 5 °C.

3.2.2 Dry-Type Distribution Transformers

Record the winding temperature (T_{dc}) of ventilated dry-type transformers as the average of readings of four or more thermometers, thermocouples, or other suitable temperature sensors inserted within the coils. Sensing points of the measuring devices must be placed as close as possible to the winding conductors.

For sealed units such as epoxy-coated or epoxy-encapsulated distribution transformers, the temperature of the windings must be recorded as either:

(1) The average of four or more temperature sensors located on the enclosure and cover as close to different parts of the winding assemblies as possible; or

(2) After allowing a stabilizing interval with no excitation and no current in the windings for at least 24 hours, the ambient temperature of the test area.

The following conditions must be met immediately before taking cold-resistance measurements:

(a) All internal temperatures measured by the internal temperature sensors must not differ from the test area ambient temperature by more than 2 °C.

(b) Enclosure surface temperatures for sealed units must not differ from the test area ambient temperature by more than 2 °C.

(c) Test area ambient temperature should not have changed by more than 3 °C for 3 hours before the test.

(d) Neither voltage nor current has been applied to the unit under test for 24 hours. In addition, the period since application of voltage or current must exceed 24 hours by any added amount of time necessary for the temperature of the transformer windings to stabilize at the level of the ambient temperature. However, this added amount of time need not exceed 24 hours.

3.3 Resistance Measurement Methods

Make resistance measurements using either the resistance bridge method, the voltmeter-ammeter method or a resistance meter. In each instance when this Uniform Test Method is used to test more than one unit of a basic model to determine the efficiency of that basic model, the resistance of the units being tested may be determined from making resistance measurements on only one of the units.

3.3.1 Resistance Bridge Methods

If the resistance bridge method is selected, use either the Wheatstone or Kelvin bridge circuit (or the equivalent of either).

3.3.1.1 Wheatstone Bridge

This bridge is best suited for measuring resistances larger than ten ohms. A schematic diagram of a Wheatstone bridge with a representative transformer under test is shown in Figure 3.1.

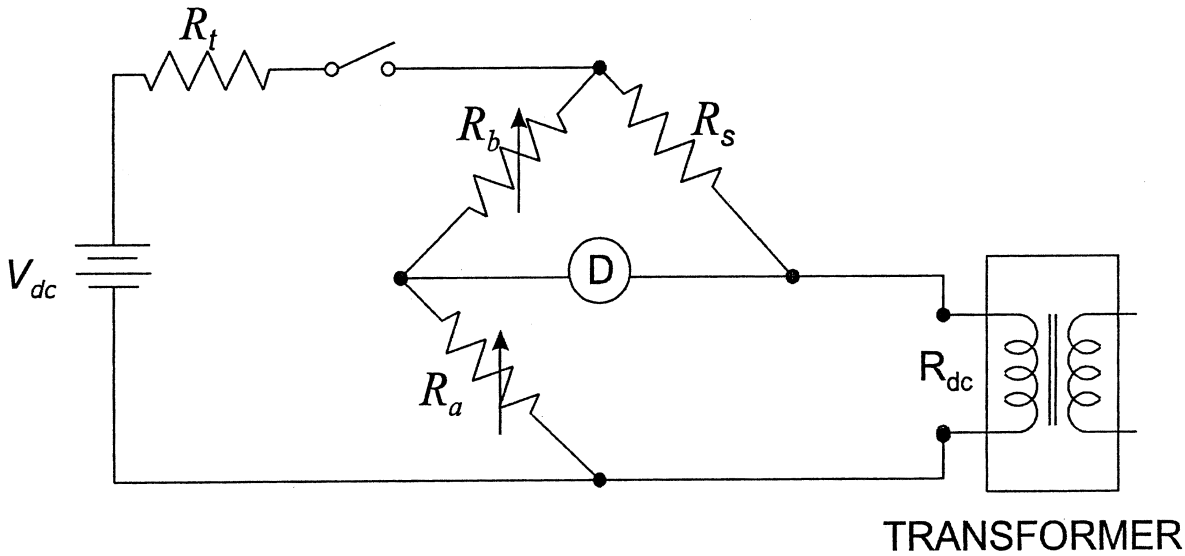

Figure 3.1 Wheatstone Bridge

Where:

R_{dc} is the resistance of the transformer winding being measured,

R_s is a standard resistor having the resistance R_s,

R_a, R_b are two precision resistors with resistance values R_a and R_b, respectively; at least one resistor must have a provision for resistance adjustment,

R_t is a resistor for reducing the time constant of the circuit,

D is a null detector, which may be either a micro ammeter or microvoltmeter or equivalent instrument for observing that no signal is present when the bridge is balanced, and

V_{dc} is a source of dc voltage for supplying the power to the Wheatstone Bridge.

In the measurement process, turn on the source (V_{dc}), and adjust the resistance ratio (R_a/R_b) to produce zero signal at the detector (D). Determine the winding resistance by using equation 3–1 as follows:

$$R_{dc} = R_s\,(R_a/R_b) \qquad (3\text{–}1)$$

3.3.1.2 Kelvin Bridge

This bridge separates the resistance of the connecting conductors to the transformer winding being measured from the resistance of the winding, and therefore is best suited for measuring resistances of ten ohms and smaller. A schematic diagram of a Kelvin bridge with a representative transformer under test is shown in Figure 3.2.

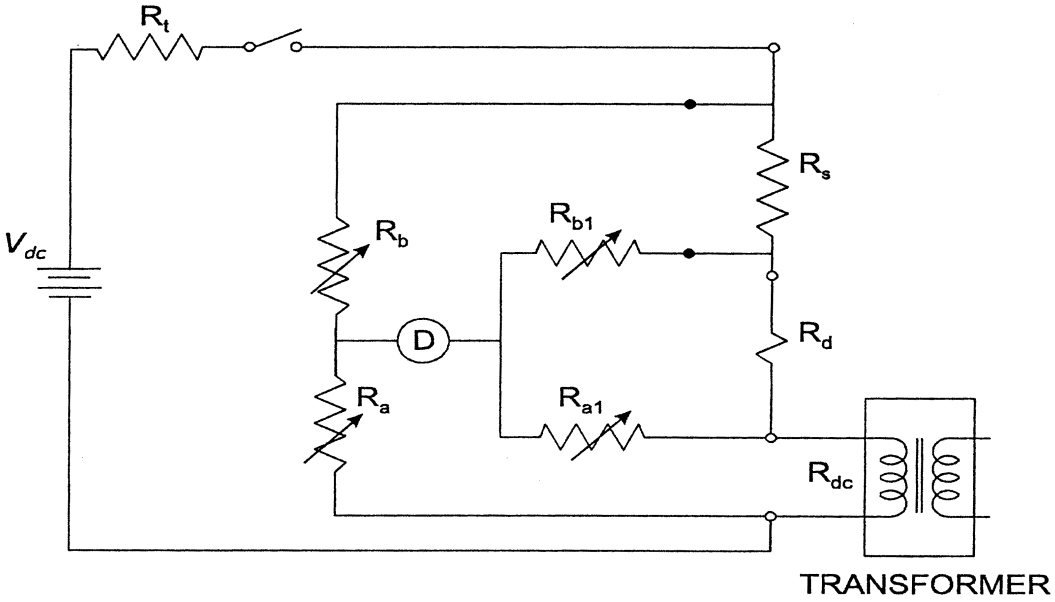

Figure 3.2 Kelvin Bridge

The Kelvin Bridge has seven of the same type of components as in the Wheatstone Bridge. It has two more resistors than the Wheatstone bridge, R_{a1} and R_{b1}. At least one of these resistors must have adjustable resistance. In the measurement process, the source is turned on, two resistance ratios (R_a/R_b) and (R_{a1}/R_{b1}) are adjusted to be equal, and then the two ratios are adjusted together to balance the bridge producing zero signal at the detector. Determine the winding resistance by using equation 3–2 as follows:

$R_{dc} = R_s (R_a/R_b)$ (3–2),

as with the Wheatstone bridge, with an additional condition that:

$(R_a/R_b) = (R_{a1}/R_{b1})$ (3–3)

The Kelvin bridge provides two sets of leads, current-carrying and voltage-sensing, to the transformer terminals and the standard resistor, thus eliminating voltage drops from the measurement in the current-carrying leads as represented by R_d.

3.3.2 Voltmeter-Ammeter Method

Employ the voltmeter-ammeter method only if the rated current of the winding is greater than one ampere and the test current is limited to 15% of the winding current. Connect the transformer winding under test to the circuit shown in Figure 3.3.

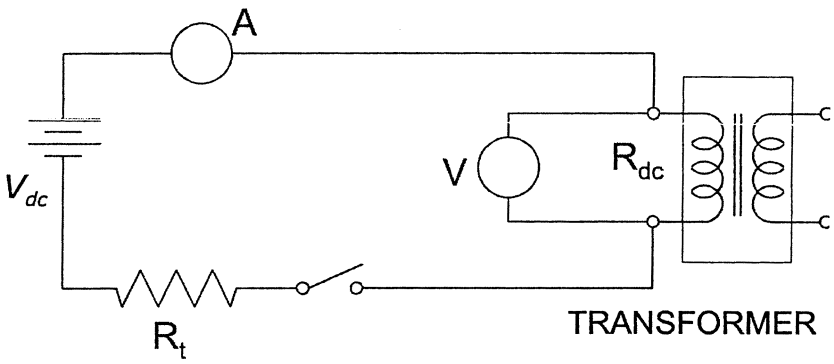

Figure 3.3 Voltmeter-Ammeter Method

Where:

A is an ammeter or a voltmeter-shunt combination for measuring the current (I_{mdc}) in the transformer winding,

V is a voltmeter with sensitivity in the millivolt range for measuring the voltage (V_{mdc}) applied to the transformer winding,

R_{dc} is the resistance of the transformer winding being measured,

R_t is a resistor for reducing the time constant of the circuit, and

V_{dc} is a source of dc voltage for supplying power to the measuring circuit.

To perform the measurement, turn on the source to produce current no larger than 15 percent of the rated current for the winding. Wait until the current and voltage readings have stabilized and then take simultaneous readings of voltage and current. Determine the winding resistance R_{dc} by using equation 3–4 as follows:

$R_{dc} = (V_{mdc}/I_{mdc})$ (3–4)

Where:

V_{mdc} is the voltage measured by the voltmeter V, and

I_{mdc} is the current measured by the ammeter A.

As shown in Figure 3.3, separate current and voltage leads must be brought to the transformer terminals. (This eliminates the errors due to lead and contact resistance.)

3.3.3 Resistance Meters

Resistance meters may be based on voltmeter-ammeter, or resistance bridge, or some other operating principle. A particular meter may be used to measure a transformer's winding resistance only if the meter's specifications for resistance range, current range, and ability to measure highly inductive resistors cover the characteristics of the transformer being tested. Also the meter's specifications for accuracy must meet the applicable criteria of Table 2.1 in section 2.0.

3.4 Precautions in Measuring Winding Resistance

3.4.1 Required actions

The following guidelines must be observed when making resistance measurements:

(a) Use separate current and voltage leads when measuring small (< 10 ohms) resistance.

(b) Use null detectors in bridge circuits, and measuring instruments in voltmeter-ammeter circuits, that have sensitivity and resolution sufficient to enable observation of at least 0.1 percent change in the measured resistance.

(c) Maintain the dc test current at or below 15 percent of the rated winding current.

(d) Inclusion of a stabilizing resistor R_t (see section 3.4.2) will require higher source voltage.

(e) Disconnect the null detector (if a bridge circuit is used) and voltmeter from the circuit before the current is switched off, and switch off current by a suitable insulated switch.

3.4.2 Guideline for Time Constant

The following guideline is suggested for the tester as a means to facilitate the measurement of resistance in accordance with the accuracy requirements of section 2.0:

The accurate reading of resistance R_{dc} may be facilitated by shortening the time constant. This is done by introducing a resistor R_t in series with the winding under test in both the bridge and voltmeter-ammeter circuits as shown in Figures 3.1 to 3.3. The relationship for the time constant is:

$$T_c = (L_{tc}/R_{tc}) \qquad (3\text{–}5)$$

Where:

T_c is the time constant in seconds,

L_{tc} is the total magnetizing and leakage inductance of the winding under test, in henries, and

R_{tc} is the total resistance in ohms, consisting of R_t in series with the winding resistance R_{dc}.

Because R_{tc} is in the denominator of the expression for the time constant, increasing the size of resistor R_{tc} will decrease the time constant. If the time constant in a given test circuit is too high for the resistance readings to be stable, then a higher resistance can be substituted for the existing R_{tc}, and successive replacements can be made until adequate stability is reached.

3.5 Conversion of Resistance Measurements

Resistance measurements must be corrected, from the temperature at which the winding resistance measurements were made, to the reference temperature. As specified in these test procedures, the reference temperature for liquid-immersed transformers loaded at 50 percent of the rated load is 55 °C. For medium-voltage, dry-type transformers loaded at 50 percent of the rated load, and for low-voltage, dry-type transformers loaded at 35 percent of the rated load, the reference temperature is 75°C.

Correct measurement temperatures to the DOE reference temperature using equation 3–6 as follows:

$$R_{ts} = R_{dc}\,[(T_s + T_k)/(T_{dc} + T_k)] \qquad (3\text{–}6)$$

Where:

R_{ts} is the resistance at the reference temperature, T_s,

R_{dc} is the measured resistance at temperature, T_{dc},

T_s is the reference temperature in °C,

T_{dc} is the temperature at which resistance was measured in °C, and

T_k is 234.5 °C for copper or 225 °C for aluminum. Where copper and aluminum windings are employed in the same transformer, use 229 °C.

4.0 Loss Measurement

4.1 General Considerations

The efficiency of a transformer is computed from the total transformer losses, which are determined from the measured value of the no-load loss and load loss power components. Each of these two power loss components is measured separately using functionally identical test sets. The measured quantities will need correction for instrumentation losses and may need corrections for known phase angle errors in measuring equipment and for the wave form distortion in the test voltage. Any power loss not measured at the applicable reference temperature must be adjusted to that reference temperature. The measured load loss must also be adjusted to a specified output loading level if not measured at the specified output loading level.

4.2 Measurement of Power Losses

4.2.1 No-Load Loss

Measure the no-load loss and apply corrections as described in section 4.4, using the appropriate test set as described in section 4.3.

4.2.2 Load Loss

Measure the load loss and apply corrections as described in section 4.5, using the appropriate test set as described in section 4.3.

4.3 Test Sets

The same test set may be used for both the no-load loss and load loss measurements provided the range of the test set encompasses the test requirements of both tests. Calibrate the test set to national standards to meet the tolerances in Table 2.1 in section 2.0. In addition, the wattmeter, current measuring system and voltage measuring system must be calibrated separately if the overall test set calibration is outside the tolerance as specified in section 2 or the individual phase angle error exceeds the values specified in section 4.5.3.

A test set based on the wattmeter-voltmeter-ammeter principle may be used to measure the power loss and the applied voltage and current of a transformer where the transformer's test current and voltage are within the measurement capability of the measuring instruments. Current and voltage transformers, known collectively as instrument transformers, or other scaling devices such as resistive or capacitive dividers for voltage, may be used in the above circumstance, and must be used in place of an instrument to measure current or voltage where the current or voltage of the transformer under test exceeds the measurement capability of such instrument. Thus, a test set may include a combination of measuring instruments and instrument transformers (or other scaling devices), so long as the current or voltage of the transformer under test does not exceed the measurement capability of any of the instruments.

4.3.1 Single Phase Test Sets

Use these for testing single phase distribution transformers.

4.3.1.1 Without Instrument Transformers

A single-phase test set without an instrument transformer is shown in Figure 4.1.

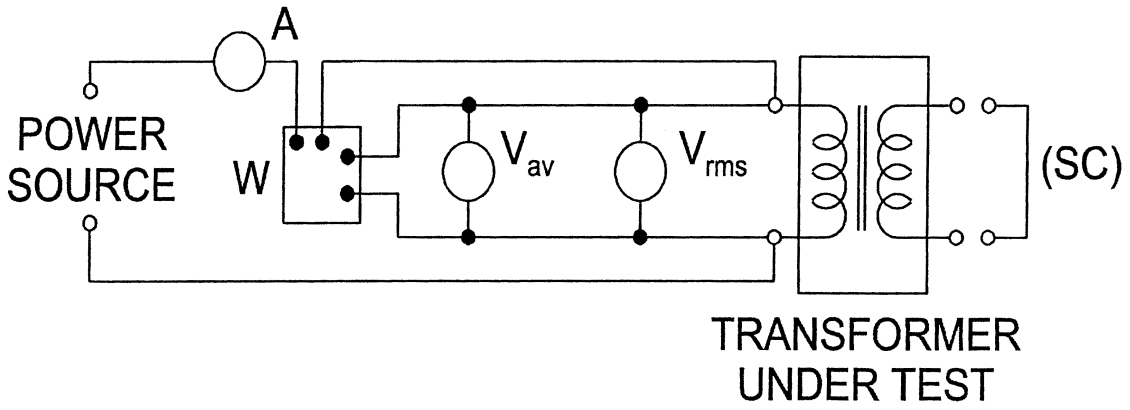

Figure 4.1 Single-Phase Test Set Without Instrument Transformers

Where:

W is a wattmeter used to measure P_{nm} and P_{lm}, the no-load and load loss power, respectively,

V_{rms} is a true root-mean-square (rms) voltmeter used to measure $V_{r(nm)}$ and V_{lm}, the rms test voltages in no-load and load loss measurements, respectively,

V_{av} is an average sensing voltmeter, calibrated to indicate rms voltage for sinusoidal waveforms and used to measure $V_{a(nm)}$, the average voltage in no-load loss measurements,

A is an rms ammeter used to measure test current, especially I_{lm}, the load loss current, and

(SC) is a conductor for providing a short-circuit across the output windings for the load loss measurements.

Either the primary or the secondary winding can be connected to the test set. However, more compatible voltage and current levels for the measuring instruments are available if for no-load loss measurements the secondary (low voltage) winding is connected to the test set, and for load loss measurements the primary winding is connected to the test set. Use the average-sensing voltmeter, V_{av}, only in no-load loss measurements.

4.3.1.2 With Instrument Transformers

A single-phase test set with instrument transformers is shown in Figure 4.2. This circuit has the same four measuring instruments as that in Figure 4.1. The current and voltage transformers, designated as (CT) and (VT), respectively, are added.

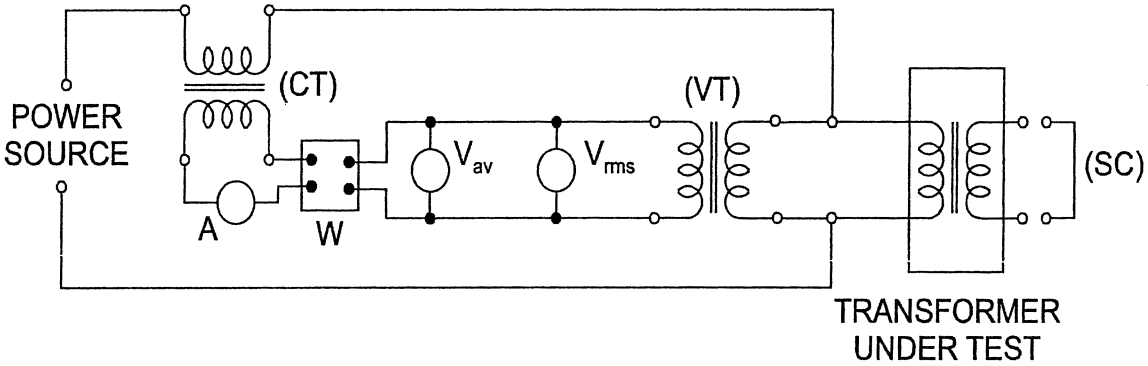

Figure 4.2 Single-Phase Test Set With Instrument Transformers

4.3.2 Three-Phase Test Sets

Use these for testing three-phase distribution transformers.

4.3.2.1 Without Instrument Transformers

A three-phase test set without instrument transformers is shown in Figure 4.3. This test set is essentially the same circuit shown in Figure 4.1 repeated three times, and the instruments are individual devices as shown. As an alternative, the entire instrumentation system of a three-phase test set without transformers may consist of a multi-function analyzer.

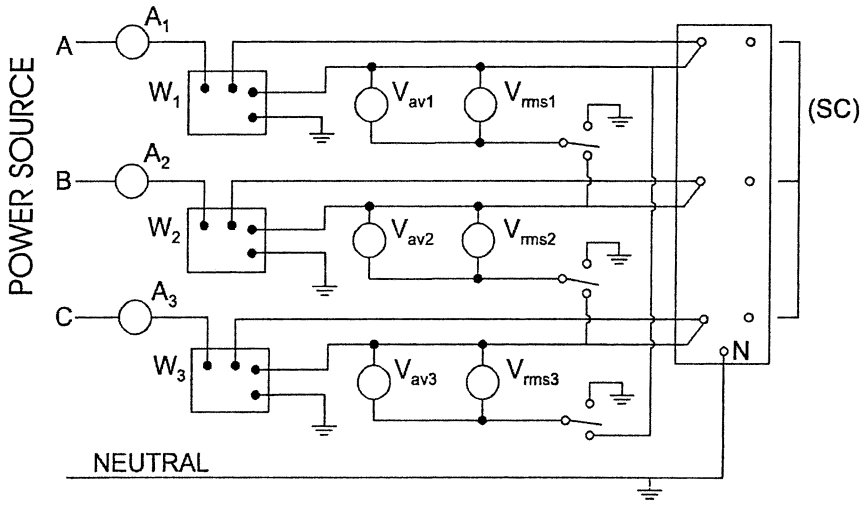

Figure 4.3 Three-Phase Test Set Without Instrument Transformers

Either group of windings, the primary or the secondary, can be connected in wye or delta configuration. If both groups of windings are connected in the wye configuration for the no-load test, the neutral of the winding connected to the test set must be connected to the neutral of the source to provide a return path for the neutral current.

In the no-load loss measurement, the voltage on the winding must be measured. Therefore a provision must be made to switch the voltmeters for line-to-neutral measurements for wye-connected windings and for line-to-line measurements for delta-connected windings.

4.3.2.2 With Instrument Transformers

A three-phase test set with instrument transformers is shown in Figure 4.4. This test set is essentially the same circuit shown in Figure 4.2 repeated three times. Provision must be made to switch the voltmeters for line-to-neutral and line-to-line measurements as in section 4.3.2.1. The voltage sensors (''coils'') of the wattmeters must always be connected in the line-to-neutral configuration.

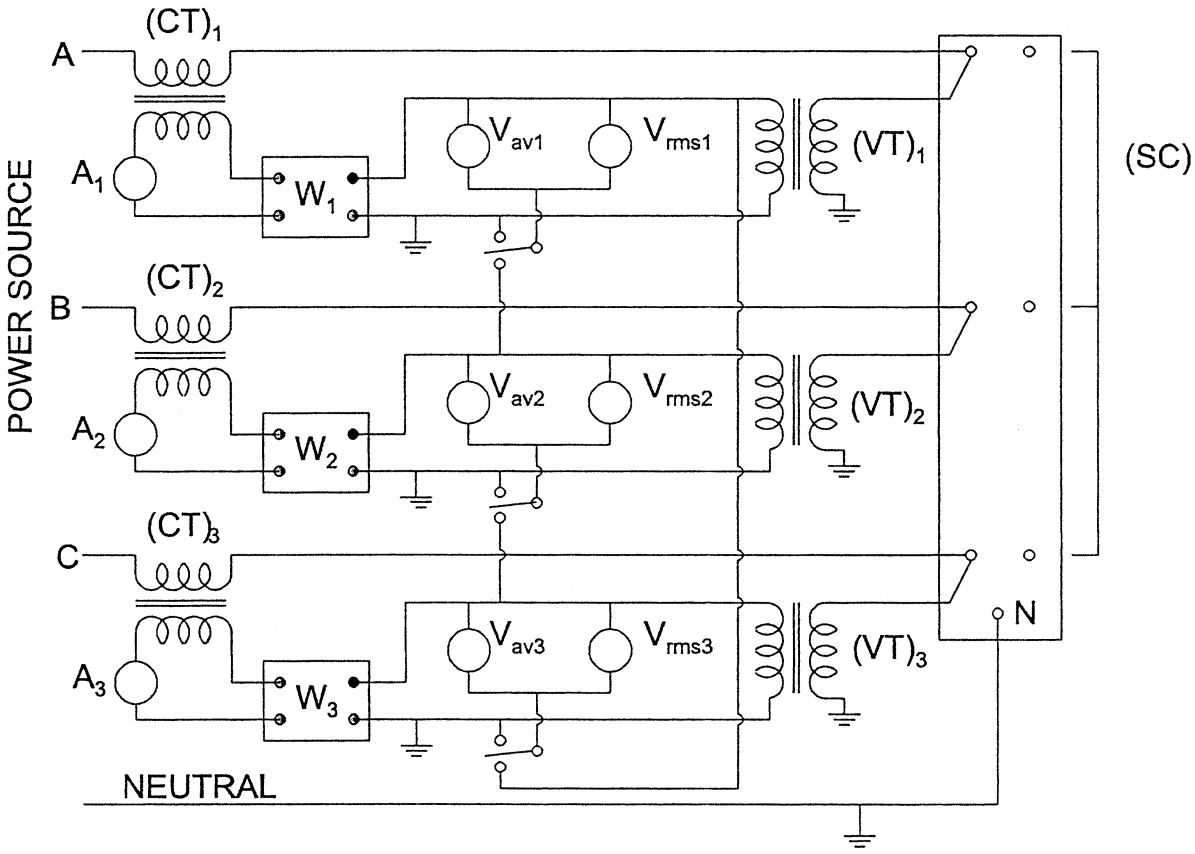

Figure 4.4 Three-Phase Test Set with Instrument Transformers

4.3.3 Test Set Neutrals

A four-wire, three-wattmeter test circuit must be used in making measurements. For delta-wound transformers, a neutral deriving transformer must be used to obtain neutral and ground for the test.

4.4 No-Load Losses: Measurement and Calculations

4.4.1 General Considerations

Make measurement corrections:

(1) For instrumentation losses;

(2) When the waveform of the applied voltage is non-sinusoidal; and

(3) When the core temperature or liquid temperature is outside the 20 °C ± 10 °C range.

4.4.2 No-Load Loss Test

The purpose of the no-load loss test is to measure no-load losses at a specified excitation voltage and a specified frequency. The no-load loss determination must be based on a sine-wave voltage corrected to the reference temperature. Connect either of the transformer windings, primary or secondary, to the appropriate test set of Figures 4.1 to 4.4, giving consideration to precaution (b) below. Leave the unconnected winding(s) open circuited. Apply the rated voltage at rated frequency, as measured by the average-sensing voltmeter, to the transformer. Take the readings of the wattmeter(s) and the average-sensing and true rms voltmeters. Observe the precautions (a), (b), and (c) below:

(a) Voltmeter connections. When correcting to a sine-wave basis using the average-voltmeter method, the voltmeter connections must be such that the waveform applied to the voltmeters is the same as the waveform across the energized windings.

(b) Energized windings. Either the high voltage or the low voltage winding of the transformer under test may be energized. Energize not less than 25 percent of the winding.

(c) Voltage and frequency. The no-load loss test must be conducted with rated voltage impressed across the transformer terminals using a voltage source at a frequency equal to the rated frequency of the transformer under test, unless otherwise specified.

Adjust the voltage to the specified value as indicated by the average-sensing voltmeter. Record the values of rms voltage, rms current, electrical power, and average voltage as close to simultaneously as possible. For a three-phase transformer, take all of the readings on one phase before proceeding to the next, and record the average of the three rms voltmeter readings as the rms voltage value.

Note: When the tester uses a power supply that is not synchronized with an electric utility grid, such as a dc/ac motor-generator set, check the frequency and maintain it within ±0.5 percent of the rated frequency of the transformer under test. A power source that is directly connected to, or synchronized with, an electric utility grid need not be monitored for frequency.

4.4.3 Corrections

4.4.3.1 Correction for Instrumentation Losses

Determine the losses attributable to the voltmeters, ammeter, and wattmeter, and to the instrument transformers if they are used, and deduct these losses from the measurement of total no-load losses.

4.4.3.2 Correction for Non-Sinusoidal Applied Voltage

The measured value of no-load loss must be corrected to a sinusoidal voltage, except when waveform distortion in the test voltage causes the magnitude of the correction to be less than 1%. In such a case, no correction is required.

To make a correction where the distortion requires a correction of 5% or less, use equation 4–1. If the distortion requires a correction to be greater than 5%, improve the test voltage and re-test. Repeat until the distortion requires a correction of 5% or less.

Determine the no-load losses of the transformer corrected for sine-wave basis from the measured value by using equation 4–1 as follows:

$$P_{ncl} = \frac{P_{nm}}{P_1 + kP_2} \qquad (4\text{-}1)$$

Where:

P_{ncl} is the no-load loss corrected to a sine-wave basis at the temperature (T_{nm}) at which no-load loss is measured,

P_{nm} is the measured no-load loss at temperature T_{nm},

P_1 is the per unit hysteresis loss,

P_2 is the per unit eddy-current loss,

$P_1 + P_2 = 1$,

$$k = \left(\frac{V_{r(nm)}}{V_{a(nm)}}\right)^2,$$

$V_{r(nm)}$ is the test voltage measured by rms voltmeter, and

$V_{a(nm)}$ is the test voltage measured by average-voltage voltmeter.

The two loss components (P_1 and P_2) are assumed equal in value, each assigned a value of 0.5 per unit, unless the actual measurement-based values of hysteresis and eddy-current losses are available (in per unit form), in which case the actual measurements apply.

4.4.3.3 Correction of No-Load Loss to Reference Temperature

After correcting the measured no-load loss for waveform distortion, correct the loss to the reference temperature of 20 °C. If the no-load loss measurements were made between 10 °C and 30 °C, this correction is not required. If the correction to reference temperature is applied, then the core temperature of the transformer during no-load loss measurement (T_{nm}) must be determined within ± 10 °C of the true average core temperature. Correct the no-load loss to the reference temperature by using equation 4–2 as follows:

$$P_{nc}=P_{ncl}\,[(1 + 0.00065\,(T_{nm} - T_{nr})] \qquad (4\text{–}2)$$

Where:

P_{nc} is the no-load losses corrected for waveform distortion and then to the reference temperature of 20°C,

P_{ncl} is the no-load losses, corrected for waveform distortion, at temperature T_{nm},

T_{nm} is the core temperature during the measurement of no-load losses, and

T_{nr} is the reference temperature, 20 °C.

4.5 Load Losses: Measurement and Calculations

4.5.1 General Considerations

The load losses of a transformer are those losses incident to a specified load carried by the transformer. Load losses consist of ohmic loss in the windings due to the load current and stray losses due to the eddy currents induced by the leakage flux in the windings, core clamps, magnetic shields, tank walls, and other conducting parts. The ohmic loss of a transformer varies directly with temperature, whereas the stray losses vary inversely with temperature.

For a transformer with a tap changer, the test must be conducted at the rated current and voltage of the nominal tap position.

4.5.2 Tests for Measuring Load Losses

Connect the transformer with either the high-voltage or low-voltage windings to the appropriate test set. Then short-circuit the winding that was not connected to the test set. Apply a voltage at the rated frequency (of the transformer under test) to the connected windings to produce the rated current in the transformer. Take the readings of the wattmeter(s), the ammeters(s), and rms voltmeter(s).

Regardless of the test set selected, the following preparatory requirements must be satisfied for accurate test results:

(a) Determine the temperature of the windings using the applicable method in section 3.2.1 or section 3.2.2.

(b) The conductors used to short-circuit the windings must have a cross-sectional area equal to, or greater than, the corresponding transformer leads.

(c) When the tester uses a power supply that is not synchronized with an electric utility grid, such as a dc/ac motor-generator set, follow the provisions of the **Note** in section 4.4.2.

4.5.3 Corrections

4.5.3.1 Correction for Instrumentation Losses

Determine the losses attributable to the voltmeters, ammeter, wattmeter and short-circuiting conductor (SC), and to the instrument transformers if they are used, and deduct these losses from the measurement of total load losses.

4.5.3.2 Correction for Phase Angle Errors

Corrections for phase angle errors are not required if the instrumentation is calibrated over the entire range of power factors and phase angle errors. Otherwise, determine whether to correct for phase angle errors from the magnitude of the normalized per unit correction, β_n, obtained by using equation 4–3 as follows:

$$\beta_n = \frac{V_{lm} I_{lm} (\beta_w - \beta_v + \beta_c) \sin\phi}{P_{lm}} \qquad (4\text{-}3)$$

The correction must be applied if β_n is outside the limits of ±0.01. If β_n is within the limits of ±0.01, the correction is permitted but not required.

If the correction for phase angle errors is to be applied, first examine the total system phase angle (β_w–β_v+β_c). Where the total system phase angle is equal to or less than ±12 milliradians (±41 minutes), use either equation 4–4 or 4–5 to correct the measured load loss power for phase angle errors, and where the total system phase angle exceeds ±12 milliradians (±41 minutes) use equation 4–5, as follows:

$$P_{lc1} = P_{lm} - V_{lm} I_{lm} (\beta_w - \beta_v + \beta_c) \sin\phi \qquad (4\text{-}4)$$

$$P_{lc1} = V_{lm} I_{lm} \cos(\phi + \beta_w - \beta_v + \beta_c) \qquad (4\text{-}5)$$

The symbols in this section (4.5.3.2) have the following meanings:

P_{lc1} is the corrected wattmeter reading for phase angle errors,

P_{lm} is the actual wattmeter reading,

V_{lm} is the measured voltage at the transformer winding,

I_{lm} is the measured rms current in the transformer winding,

$$PF = \frac{P_{lm}}{V_{lm} I_{lm}} \text{ is the measured power factor of the load loss impedance,}$$

$$\phi = \cos^{-1} \frac{P_{lm}}{V_{lm} I_{lm}} \text{ is the measured phase angle between } V_{lm} \text{ and } I_{lm},$$

β_w is the phase angle error (in radians) of the wattmeter; the error is positive if the phase angle between the voltage and current phasors as sensed by the wattmeter is smaller than the true phase angle, thus effectively increasing the measured power,

β_v is the phase angle error (in radians) of the voltage transformer; the error is positive if the secondary voltage leads the primary voltage, and

β_c is the phase angle error (in radians) of the current transformer; the error is positive if the secondary current leads the primary current.

The instrumentation phase angle errors used in the correction equations must be specific for the test conditions involved.

4.5.3.3 Temperature Correction of Load Loss

When the measurement of load loss is made at a temperature T_{lm} that is different from the reference temperature, use the procedure summarized in the equations 4–6 to 4–10 to correct the measured load loss to the reference temperature.

Calculate the ohmic loss (P_e) by using equation 4–6 as follows:

$$\begin{aligned} P_e &= P_{e(p)} + P_{e(s)} \\ &= I^2_{lm(p)} R_{dc(p)} \frac{T_{k(p)} + T_{lm}}{T_{k(p)} + T_{dc}} + I^2_{lm(s)} R_{dc(s)} \frac{T_{k(s)} + T_{lm}}{T_{k(s)} + T_{dc}} \\ &= I^2_{lm(p)} \left[R_{dc(p)} \frac{T_{k(p)} + T_{lm}}{T_{k(p)} + T_{dc}} + \left[\frac{N_1}{N_2}\right]^2 R_{dc(s)} \frac{T_{k(s)} + T_{lm}}{T_{k(s)} + T_{dc}} \right] \end{aligned} \qquad (4\text{-}6)$$

Obtain the stray loss by subtracting the calculated ohmic loss from the measured load loss, by using equation 4–7 as follows:

$$P_s = P_{lc1} - P_e \qquad (4\text{-}7)$$

Correct the ohmic and stray losses to the reference temperature for the load loss by using equations 4–8 and 4–9, respectively, as follows:

$$P_{er} = P_{e(p)} \frac{T_{k(p)} + T_{lr}}{T_{k(p)} + T_{lm}} + P_{e(s)} \frac{T_{k(s)} + T_{lr}}{T_{k(s)} + T_{lm}}$$

$$= I_{lm(p)}^2 \left[R_{dc(p)} \frac{T_{k(p)} + T_{lr}}{T_{k(p)} + T_{dc}} + \left[\frac{N_1}{N_2} \right]^2 R_{dc(s)} \frac{T_{k(s)} + T_{lr}}{T_{k(s)} + T_{dc}} \right] \qquad (4\text{-}8)$$

$$P_{sr} = \left(P_{lc1} - P_e \right) \frac{T_k + T_{lm}}{T_k + T_{lr}} \qquad (4\text{-}9)$$

Add the ohmic and stray losses, corrected to the reference temperature, to give the load loss, P_{lc2}, at the reference temperature, by using equation (4–10) as follows:

$$P_{lc2} = P_{er} + P_{sr}$$

$$= I_{lm(p)}^2 \left[R_{dc(p)} \frac{T_{k(p)} + T_{lr}}{T_{k(p)} + T_{dc}} + \left[\frac{N_1}{N_2} \right]^2 R_{dc(s)} \frac{T_{k(s)+} T_{lr}}{T_{k(s)} + T_{dc}} \right]$$

$$+ \left[P_{lc1} - I_{lm(p)}^2 \left[R_{dc(p)} \frac{T_{k(p)} + T_{lm}}{T_{k(p)} + T_{dc}} + \left[\frac{N_1}{N_2} \right]^2 R_{dc(s)} \frac{T_{k(s)+} T_{lm}}{T_{k(s)} + T_{dc}} \right] \right] \frac{T_k + T_{lm}}{T_k + T_{lr}} \qquad (4\text{-}10)$$

The symbols in this section (4.5.3.3) have the following meanings:

$I_{lm(p)}$ is the primary current in amperes,
$I_{lm(s)}$ is the secondary current in amperes,
P_e is the ohmic loss in the transformer in watts at the temperature T_{lm},
$P_{e(p)}$ is the ohmic loss in watts in the primary winding at the temperature T_{lm},
$P_{e(s)}$ is the ohmic loss in watts in the secondary winding at the temperature T_{lm},
P_{er} is the ohmic loss in watts corrected to the reference temperature,
P_{lc1} is the measured load loss in watts, corrected for phase angle error, at the temperature T_{lm},
P_{lc2} is the load loss at the reference temperature,
P_s is the stray loss in watts at the temperature T_{lm},
P_{sr} is the stray loss in watts corrected to the reference temperature,
$R_{dc(p)}$ is the measured dc primary winding resistance in ohms,
$R_{dc(s)}$ is the measured dc secondary winding resistance in ohms,
T_k is the critical temperature in degrees Celsius for the material of the transformer windings. Where copper is used in both primary and secondary windings, T_k is 234.5 °C; where aluminum is used in both primary and secondary windings, T_k is 225 °C; where both copper and aluminum are used in the same transformer, the value of 229 °C is used for T_k,
$T_{k(p)}$ is the critical temperature in degrees Celsius for the material of the primary winding: 234.5 °C if copper and 225 °C if aluminum,
$T_{k(s)}$ is the critical temperature in degrees Celsius for the material of the secondary winding: 234.5 °C if copper and 225 °C if aluminum,
T_{lm} is the temperature in degrees Celsius at which the load loss is measured,
T_{lr} is the reference temperature for the load loss in degrees Celsius,
T_{dc} is the temperature in degrees Celsius at which the resistance values are measured, and
N_1/N_2 is the ratio of the number of turns in the primary winding (N_1) to the number of turns in the secondary winding (N_2); for a primary winding with taps, N_1 is the number of turns used when the voltage applied to the primary winding is the rated primary voltage.

5.0 Determining the Efficiency Value of the Transformer

This section presents the equations to use in determining the efficiency value of the transformer at the required reference conditions and at the specified loading level. The details of measurements are described in sections 3.0 and 4.0.

5.1 Output Loading Level Adjustment

If the output loading level for energy efficiency is different from the level at which the load loss power measurements were made, then adjust the corrected load loss power, P_{lc2}, by using equation 5–1 as follows:

$$P_{lc} = P_{lc2} \left[\frac{P_{os}}{P_{or}} \right] = P_{lc2} L^2 \qquad (5\text{-}1)$$

Where:

P_{lc} is the adjusted load loss power to the specified energy efficiency load level,
P_{lc2} is as calculated in section 4.5.3.3,
P_{or} is the rated transformer output power (name plate),
P_{os} is the specified energy efficiency load level, where P_{os}, = $P_{or}L^2$, and
L is the per unit load level, *e.g.,* if the load level is 50 percent then ''L'' will be 0.5.

5.2 Total Loss Power Calculation

Calculate the corrected total loss power by using equation 5–2 as follows:

$$P_{ts} = P_{nc} + P_{lc} \qquad (5\text{-}2)$$

Where:

P_{ts} is the corrected total loss power adjusted for the transformer output loading specified by the standard,
P_{nc} is as calculated in section 4.4.3.3, and
P_{lc} is as calculated in section 5.1.

5.3 Energy Efficiency Calculation

Calculate efficiency (η) at specified energy efficiency load level, P_{os}, by using equation 5–3 as follows:

$$\eta = \frac{P_{os}}{P_{os} + P_{ts}} \qquad (5\text{-}3)$$

Where:

P_{os} is as described and calculated in section 5.1, and
P_{ts} is as described and calculated in section 5.2.

5.4 Significant Figures in Power Loss and Efficiency Data

In measured and calculated data, retain enough significant figures to provide at least 1 percent resolution in power loss data and 0.01 percent resolution in efficiency data.

6.0 Test Equipment Calibration and Certification

6.1 Test Equipment

Test equipment and measuring instruments must be maintained properly, and calibration records must be maintained. The calibration of the test set shall confirm the accuracy of the test set to that specified in section 2.0.

The party performing the tests shall control, calibrate and maintain measuring and test equipment, whether or not it owns the equipment, has the equipment on loan, or the equipment is provided by another party. Equipment shall be used in a manner which assures that measurement uncertainty

is known and is consistent with the required measurement capability.

6.2 Calibration and Certification

The party performing the tests must:

(a) Identify the measurements to be made, the accuracy required (section 2.0) and select the appropriate measurement and test equipment;

(b) At prescribed intervals, or prior to use, identify, check and calibrate, if needed, all measuring and test equipment systems or devices that affect test accuracy, against certified equipment having a known valid relationship to nationally recognized standards; where no such standards exist, the basis used for calibration must be documented;

(c) Establish, document and maintain calibration procedures, including details of equipment type, identification number, location, frequency of checks, check method, acceptance criteria and action to be taken when results are unsatisfactory;

(d) Ensure that the measuring and test equipment is capable of the accuracy and precision necessary, taking into account the voltage, current and power factor of the transformer under test;

(e) Identify measuring and test equipment with a suitable indicator or approved identification record to show the calibration status;

(f) Maintain calibration records for measuring and test equipment;

(g) Assess and document the validity of previous test results when measuring and test equipment is found to be out of calibration;

(h) Ensure that the environmental conditions are suitable for the calibrations, measurements and tests being carried out;

(i) Ensure that the handling, preservation and storage of measuring and test equipment is such that the accuracy and fitness for use is maintained; and

(j) Safeguard measuring and test facilities, including both test hardware and test software, from adjustments which would invalidate the calibration setting.

Appendix B to Subpart B of Part 432—Sampling Plan for Enforcement Testing

Step 1. The number of units in the sample (m_1) shall be in accordance with §§ 432.13(a)(4), 432.13(a)(5), 432.13(a)(6) and 432.13(a)(7) and shall not be greater than twenty. The number of tests in the first sample (n_1) shall be in accordance with § 432.13(a)(8) and shall be not fewer than four.

Step 2. Compute the mean ($\bar{X}_1$) of the measured energy performance of the n_1 tests in the first sample by using equation 1 as follows:

$$\overline{X}_1 = \frac{1}{n_1}\sum_{i=1}^{n_1} X_i \qquad (1)$$

Where X_i is the measured efficiency of test i.

Step 3. Compute the sample standard deviation (S_1) of the measured efficiency of the n_1 tests in the first sample by using equation 2 as follows:

$$S_1 = \sqrt{\frac{\sum_{i=1}^{n_1}\left(X_i - \overline{X}_1\right)^2}{n_1 - 1}} \qquad (2)$$

Step 4. Compute the standard error ($SE(\bar{X}_1)$) of the mean efficiency of the first sample by using equation 3 as follows:

$$SE\left(\overline{X}_1\right) = \frac{S_1}{\sqrt{n_1}} \qquad (3)$$

Step 5. Compute the sample size discount ($SSD(m_1)$) by using equation 4 as follows:

$$SSD\left(m_1\right) = \frac{100}{1 + \left(1 + \frac{.05}{\sqrt{m_1}}\right)\left(\frac{100}{RE} - 1\right)} \qquad (4)$$

Where m_1 is the number of units in the sample, and

RE is the applicable EPCA efficiency when the test is to determine compliance with the applicable statutory standard, or is the labeled efficiency when the test is to determine compliance with the labeled efficiency value.

Step 6. Compute the lower control limit (LCL_1) for the mean of the first sample by using equation 5 as follows:

$$LCL_1 = SSD\left(m_1\right) - tSE\left(\overline{X}_1\right) \qquad (5)$$

Where t is the 2.5th percentile of a t-distribution for a sample size of n_1, which yields a 97.5 percent confidence level for a one-tailed *t*-test.

Step 7. Compare the mean of the first sample ($\bar{X}_1$) with the lower control limit (LCL_1) to determine one of the following:

(i) If the mean of the first sample is below the lower control limit, then the basic model is in non-compliance and testing is at an end.

(ii) If the mean is equal to or greater than the lower control limit, no final determination of compliance or non-compliance can be made; proceed to Step 8.

Step 8. Determine the recommended sample size (n) by using equation 6 as follows:

$$n = \left[\frac{tS_1(105 - 0.05RE)}{RE(5 - 0.05RE)}\right]^2 \qquad (6)$$

Where S_1 and t have the values used in Steps 3 and 6, respectively. The factor

$$\frac{105 - 0.05RE}{RE(5 - 0.05RE)}$$

is based on a 5-percent tolerance in the total power loss.

Given the value of n, determine one of the following:

(i) If the value of n is less than or equal to n_1 and if the mean energy efficiency of the first sample ($\bar{X}_1$) is equal to or greater than the lower control limit (LCL_1), the basic model is in compliance and testing is at an end.

(ii) If the value of n is greater than n_1, and no additional units are available for testing, testing is at an end and the basic model is in non-compliance. If the value of n is greater than n_1, and additional units are available for testing, select a second sample n_2. The size of the n_2 sample is determined to be the smallest integer equal to or greater than the difference $n - n_1$. If the value of n_2 so calculated is greater than $20 - n_1$, set n_2 equal to $20 - n_1$.

Step 9. After testing the n_2 sample, compute the combined mean ($\bar{X}_2$) of the measured energy performance of the n_1 and n_2 tests of the combined first and second samples by using equation 7 as follows:

$$\overline{X}_2 = \frac{1}{n_1 + n_2}\sum_{i=1}^{n_1+n_2} X_i \qquad (7)$$

Step 10. Compute the standard error ($SE(\bar{X}_2)$) of the mean efficiency of the n_1 and n_2 tests in the combined first and second samples by using equation 8 as follows:

$$SE\left(\overline{X}_2\right) = \frac{S_1}{\sqrt{n_1 + n_2}} \qquad (8)$$

(Note that S_1 is the value obtained above in Step 3.)

Step 11. Set the lower control limit (LCL_2) to,

$$LCL_2 = SSD\left(m_1\right) - tSE\left(\overline{X}_2\right) \qquad (9)$$

Where t has the value obtained in Step 5 and $SSD(m_1)$ is sample size discount from Step 5. Compare the combined sample mean ($\bar{X}_2$) to the lower control limit (LCL_2) to find one of the following:

(i) If the mean of the combined sample ($\bar{X}_2$) is less than the lower control limit (LCL_2), the basic model is in non-compliance and testing is at an end.

(ii) If the mean of the combined sample ($\bar{X}_2$) is equal to or greater than the lower control limit (LCL_2), the basic model is in compliance and testing is at an end.

Manufacturer-Option Testing

If a determination of non-compliance is made in Steps 6, 7 or 11, above, the manufacturer may request that additional

testing be conducted, in accordance with the following procedures.

Step A. The manufacturer requests that an additional number, n_3, of units be tested, with n_3 chosen such that $n_1 + n_2 + n_3$ does not exceed 20.

Step B. Compute the mean efficiency, standard error, and lower control limit of the new combined sample in accordance with the procedures prescribed in Steps 8, 9, and 10, above.

Step C. Compare the mean performance of the new combined sample to the lower control limit (LCL_2) to determine one of the following:

(a) If the new combined sample mean is equal to or greater than the lower control limit, the basic model is in compliance and testing is at an end.

(b) If the new combined sample mean is less than the lower control limit and the value of $n_1 + n_2 + n_3$ is less than 20, the manufacturer may request that additional units be tested. The total of all units tested may not exceed 20. Steps A, B, and C are then repeated.

(c) Otherwise, the basic model is determined to be in non-compliance.

Subpart C—[Reserved]

Subpart D—[Reserved]

[FR Doc. 04–16576 Filed 7–28–04; 8:45 am]

BILLING CODE 6450–01–P

Federal Register

Thursday,
July 29, 2004

Part VI

Office of Personnel Management

5 CFR Parts 451, 530, et al.

Senior Executive Service Pay and Performance Awards and Aggregate Limitation on Pay; Proposed Rule

OFFICE OF PERSONNEL MANAGEMENT

5 CFR Parts 451, 530, 534, and 575

RIN 3206–AK34

Senior Executive Service Pay and Performance Awards and Aggregate Limitation on Pay

AGENCY: Office of Personnel Management.

ACTION: Proposed rule.

SUMMARY: The Office of Personnel Management (OPM) is issuing proposed regulations to implement statutory provisions that establish a new performance-based pay system for the Senior Executive Service (SES) and a higher aggregate limitation on pay for SES members and employees in senior-level (SL) and scientific or professional (ST) positions. These regulations prescribe the criteria for the administration of rates of basic pay and performance awards under the SES performance-based pay system and the rules for applying the aggregate limitation on pay.

DATES: Comments must be received on or before August 30, 2004.

ADDRESSES: Send or deliver comments to Donald J. Winstead, Deputy Associate Director for Pay and Performance Policy, Office of Personnel Management, Room 7H31, 1900 E Street, NW., Washington, DC 20415–8200; by FAX at (202) 606–0824; or by e-mail at *pay-performance-policy@opm.gov*.

FOR FURTHER INFORMATION CONTACT: Jo Ann Perrini by telephone at (202) 606–2858; by FAX at (202) 606–0824; or by email at *pay-performance-policy@opm.gov*.

SUPPLEMENTARY INFORMATION: The Office of Personnel Management (OPM) is issuing proposed regulations to implement two statutory provisions that strengthen the linkage between the performance and pay of an agency's Senior Executive Service (SES), senior-level (SL), and scientific or professional (ST) employees. The new SES performance-based pay system requires agencies to make decisions on setting and adjusting rates of basic pay for SES members based on individual performance and/or contribution to the agency's performance as determined under a rigorous performance management system. OPM, jointly with the Office of Management and Budget (OMB), also is issuing regulations to prescribe the criteria and procedures for obtaining certification of an agency's performance appraisal system(s) for SES members and SL/ST employees. Agencies must receive certification of their performance appraisal systems to use the higher base pay limitation for SES members and to use the higher aggregate limitation on pay for SES and SL/ST employees. In these regulations, we interchangeably use the terms ''SES members'' and ''senior executives'' to mean members of the Senior Executive Service. In addition, we refer to SL/ST employees as ''senior professionals.''

On January 13, 2004, OPM issued interim regulations to establish the new SES performance-based pay system (69 FR 2048). In those interim regulations, OPM established the structure of the SES rate range, rules for conversion to the new pay system, and the criteria for providing pay adjustments to SES members on or after the first applicable pay period beginning on or after January 1, 2004 (January 11, 2004, for most employees). OPM has issued additional guidance on the SES pay system at *http://www.opm.gov/oca/compmemo/index.asp*. In these proposed regulations, we are prescribing rules for establishing and adjusting SES rates of basic pay, paying performance awards to senior executives, and applying the aggregate limitation on pay if an agency receives certification of an applicable performance appraisal system under 5 U.S.C. 5307(d).

New SES Performance-Based Pay System

Section 1125 of Public Law 108–136 (November 24, 2003) amended 5 U.S.C. 5382 to establish a new performance-based pay system for the SES that has an ''open-range'' pay band. Each member of the SES will be paid at one of the rates within the SES rate range. In the interim regulations issued on January 13, 2004, OPM established the minimum rate of basic pay for the SES rate range at the rate of basic pay (excluding locality payments) payable under 5 U.S.C. 5376 for senior-level positions ($104,927 in 2004). OPM established the maximum rate of basic pay for the SES rate range at the rate for level III of the Executive Schedule ($145,600 in 2004). These proposed regulations establish the maximum rate of basic pay for the SES rate range at the rate for level II of the Executive Schedule ($158,100 in 2004) for those agency senior executive performance appraisal systems that have been certified by OPM, with OMB concurrence, in accordance with 5 U.S.C. 5307 and OPM's regulations at 5 CFR part 430, subpart D. To receive certification, an agency must demonstrate that the applicable performance appraisal system makes meaningful distinctions based on relative performance.

The minimum rate of basic pay for the SES rate range will increase consistent with any increase in the minimum rate of basic pay for senior-level positions under 5 U.S.C. 5376, and the maximum rate of basic pay for the SES rate range will increase with any increase in the rates for levels II and III of the Executive Schedule. Section 534.404(f) allows agencies to review an initial determination to adjust a rate of basic pay and grant an additional increase, if warranted, to a senior executive if there is an additional increase in the rates for the Executive Schedule that is made effective on the first day of the first pay period beginning on or after January 1 of that year. Such additional adjustments in pay must be made effective as of the effective date of the initial determination to adjust the senior executive's rate of basic pay.

Conversion to the New SES Pay System

On January 13, 2004, OPM issued interim regulations on conversion to the new SES pay system. In these proposed regulations, we have revised § 534.406 to further clarify the rules for converting senior executives to the new system. Generally, upon conversion to the new SES pay system, an SES member was entitled to a new rate of basic pay equal to the existing rate of basic pay plus any applicable locality payment to which the employee was entitled immediately before the first day of the first applicable pay period beginning on or after January 1, 2004 (January 10, 2004, for most employees). However, under section 1125(c)(2) of Public Law 108–136, an SES member's rate of basic pay, plus any applicable locality-based comparability payment under 5 U.S.C. 5304 to which the employee was entitled on November 24, 2003, may not be reduced for 1 year after the first day of the first applicable pay period beginning on or after January 1, 2004 (January 11, 2004, for most employees). If an SES member's rate of basic pay, plus any applicable locality-based comparability payment under 5 U.S.C. 5304 to which the employee was entitled on November 24, 2003, is higher than the rate in effect on January 10, 2004, the agency must use the higher rate for the purpose of converting the SES member to the SES pay system.

On January 11, 2004, certain SES members who were assigned to positions that have geographic mobility requirements and who were assigned outside the 48 contiguous States and the District of Columbia continued to receive their rate of basic pay in effect on January 10, 2004, or, if higher, the

rate of basic pay in effect on November 23, 2003. However, upon reassignment to a position in the 48 contiguous States or the District of Columbia, these employees are entitled to have their rates of basic pay converted to a new SES rate of basic pay that equals their current rate of basic pay, plus the amount of locality pay authorized under 5 U.S.C. 5304 for the applicable locality pay area. A senior executive who is reassigned to a locality pay area is not automatically entitled to a rate of basic pay that is higher than the rate for level III of the Executive Schedule. If the senior executive's rate of basic pay did not exceed the rate for level III of the Executive Schedule while assigned to a position outside the 48 contiguous States or the District of Columbia, the senior executive's converted rate of basic pay may not exceed the rate for level III of the Executive Schedule upon reassignment to a locality pay area. Of course, an agency may choose to consider the applicable locality payment when setting or adjusting the rate of basic pay of a senior executive who transfers to a position within the 48 contiguous States, but whose position is not subject to a geographic mobility requirement.

On January 11, 2004, an SES law enforcement officer (LEO) continued to receive his or her rate of basic pay, plus any applicable special geographic pay adjustment established for LEOs under section 404(a) of the Federal Employees Pay Comparability Act of 1990 (Pub. L. 101–509) to which he or she was entitled on January 10, 2004, or, if higher, his or her rate of basic pay plus the LEO special geographic pay adjustment in effect on November 23, 2003. On March 3, 2004, the President issued Executive Order 13332, which increased General Schedule rates of pay and locality-based comparability payments effective on the first day of the first applicable pay period beginning on or after January 1, 2004 (January 11, 2004, for most employees). As a result, the remaining LEO special geographic pay adjustment in Boston was terminated as of January 11, 2004, because a higher locality pay percentage now applies to LEOs. Agencies must correct the rate of basic pay for SES law enforcement officers in Boston and base any pay adjustments approved on or after January 11, 2004, on the senior executive's newly reconstructed rate of basic pay. (See *http://www.opm.gov/oca/compmemo/2004/2004–05.asp*.) The newly reconstructed rate is the senior executive LEO's rate of basic pay.

Setting and Adjusting Rates of Pay for SES Members

The new subpart D in 5 CFR part 534 prescribes the rules for setting and adjusting rates of basic pay and granting awards to SES members. Section 534.404(g) requires agencies to establish a plan for setting and adjusting rates of basic pay for their senior executives. The agencies' plans may establish policies on the minimum increase in pay that may be offered to current employees upon initial appointment to the SES. An agency may set and adjust a senior executive's rate of basic pay at any rate within the applicable SES rate range, based on individual performance and/or contribution to the agency's performance, as determined under a rigorous performance management system. In this regard, agencies may consider any unique skills, qualifications, or competencies that the individual possesses, and their significance to the agency's mission, as well as the individual's current responsibilities. Agencies must ensure that only those senior executives who have demonstrated the highest levels of individual performance and/or made the greatest contributions to the agency's performance or, in the case of newly-appointed senior executives, those who possess superior leadership or other competencies, receive the highest rates of basic pay and pay adjustments.

Setting rates of basic pay higher than level III of the Executive Schedule. Rates of basic pay higher than the rate for level III of the Executive Schedule but less than or equal to the rate for level II of the Executive Schedule generally should be reserved for those senior executives who have demonstrated the highest levels of individual performance and/or made the greatest contributions to agency performance, as determined by the agency through the administration of its applicable performance appraisal system for senior executives, or, in the case of newly-appointed senior executives, those who possess superior leadership or other competencies, consistent with the agency's strategic human capital plan. For example, rates of pay higher than the rate for level III of the Executive Schedule should be reserved for a senior executive with an exceptionally meritorious accomplishment, for a senior executive who is assigned to a position with substantially greater scope and responsibility, or for a senior executive who is critical to the mission of the agency. In all cases, setting pay above the rate for level III of the Executive Schedule must be approved by the agency head or designee who performs the functions described in 5 CFR 430.404(a)(5) and (6) (oversight of senior executive appraisal process and communication of performance assessment and evaluation guidelines).

Setting pay upon initial appointment to the SES. Upon initial appointment to an SES position, an authorized agency official may set an SES member's rate of basic pay at any rate within the SES rate range consistent with the restrictions on setting pay above the rate for level III of the Executive Schedule. The authorized agency official must determine the new senior executive's appropriate rate of basic pay based on the nature and quality of the individual's experience, qualifications, and accomplishments as they relate to the requirements of the SES position, as well as the individual's current responsibilities.

Adjusting SES rates of basic pay. A senior executive who receives an annual summary rating of outstanding must be considered for an annual pay increase. A senior executive who receives a summary performance rating of less than fully successful may not receive an increase in pay for the current performance appraisal period. Subject to the 1-year prohibition in 5 U.S.C. 5382(c) on reducing a senior executive's rate of basic pay (see § 534.406(b)), an authorized agency official may reduce a senior executive's rate of basic pay for performance and/or disciplinary reasons. Such a reduction in pay for a career senior executive may not exceed 10 percent (compared to the former limitation on reductions in pay of one SES rate, or approximately 5 percent of basic pay). Any pay reduction may be appealed to the head of the agency. The agency head's decision is final and non-reviewable.

12-Month rule. Generally, an authorized agency official may adjust (*i.e.*, increase or reduce) the rate of basic pay of a senior executive not more than once in any 12-month period. The setting of pay upon initial appointment or reappointment to the SES and adjusting an SES rate of basic pay are considered pay adjustments for this purpose. However, under § 534.404(c)(4), an authorized agency official may approve an increase in a senior executive's rate of basic pay more than once during a 12-month period where the head of an agency or designee who performs the functions described in 5 CFR 430.404(a)(5) and (6) determines that an additional increase is warranted (1) for an exceptionally meritorious accomplishment, (2) for a senior executive who is reassigned to a position with substantially greater scope and responsibility, (3) for a senior

executive who is critical to the mission of the agency and who would be likely to leave the agency in the absence of a pay increase, or (4) to align a senior executive with the agency's senior executive appraisal and pay adjustment cycle (*e.g.*, in the case of a senior executive who was appointed to an SES position within the past 12 months or a senior executive who was transferred to an SES position from an agency with a different senior executive appraisal and pay adjustment cycle within the past 12 months).

OPM recognizes that as the rate of basic pay for levels II and III of the Executive Schedule are increased, the maximum rate of the SES rate range for an SES performance appraisal system also increases, which disadvantages agencies that have already granted pay increases to their senior executives following their SES performance appraisal periods. We therefore solicit the views of commenters on a proposal to establish an additional exception to the 12-month rule that would permit agencies, at their discretion, to grant an additional pay increase to a senior executive whose rate of basic pay is equivalent to the rate for level II or level III when the applicable maximum rate is increased and becomes effective after an agency has already granted a pay increase to the senior executive. An additional pay increase under this circumstance would not be considered a pay adjustment for the purpose of applying the 12-month rule.

Adjustments in pay prior to certification of performance appraisal system(s). Section 534.404(d) authorizes agencies to increase a senior executive's rate of basic pay on the first day of the first applicable pay period beginning on or after January 1, 2004, or on any date thereafter. Prior to obtaining certification of the agency's performance appraisal system(s) for senior executives under 5 CFR part 430, subpart D, an agency may increase a senior executive's rate of basic pay up to the rate for level III of the Executive Schedule where the individual's performance and/or contributions so warrant and the senior executive is otherwise eligible for such a pay increase (*i.e.*, he or she did not receive a pay adjustment during the previous 12-month period). On January 20, 2004, the Director of OPM delegated to the heads of agencies the authority to make limited exceptions to the 12-month rule. (See *http://www.opm.gov/oca/compmemo/2004/2004–04.asp.*) Because we are proposing to provide agencies, in these regulations, with authority to make exceptions to the 12-month rule under certain conditions, the Director of OPM intends to withdraw this delegated authority upon issuance of final regulations on SES pay and performance awards. An adjustment in pay prior to certification is considered a pay adjustment for the purpose of applying § 534.404(c).

Adjustments in pay after certification of performance appraisal system(s). Section 534.404(e) authorizes an agency that receives certification of its performance appraisal system(s) for senior executives under 5 CFR part 430, subpart D, to increase a senior executive's rate of basic pay up to the rate for level II of the Executive Schedule if warranted and the senior executive is otherwise eligible for such a pay increase (*i.e.*, he or she did not receive a pay adjustment during the previous 12-month period). In § 534.404(c)(4), OPM has provided agencies with authority to make exceptions to the 12-month rule under certain limited conditions. Agencies must comply with the limitations in § 534.403(a)(2) for setting a senior executive's rate of basic pay higher than the rate for level III of the Executive Schedule and reserve these higher rates of pay for those senior executives who have demonstrated the highest levels of individual performance and/or made the greatest contributions to the agency's performance or, in the case of a newly-appointed senior executive, those who possess superior leadership or other competencies. A post-certification adjustment in pay is considered a pay adjustment for the purpose of applying § 534.404(c).

No reduction in pay upon transfer to another agency or suspension of certification. A senior executive whose rate of basic pay is higher than the rate for level III of the Executive Schedule may not suffer a reduction in pay as a result of transfer from an agency with a maximum SES rate of basic pay equal to the rate for level II of the Executive Schedule to an agency with a maximum SES rate of basic pay equal to the rate for level III of the Executive Schedule (§ 534.404(h)(2)) or as the result of a decision to suspend certification of the applicable performance appraisal system under 5 CFR part 430, subpart D (§ 534.403(b)). The senior executive will continue to receive his or her current SES rate and is not eligible for a pay increase until the employing agency's applicable performance appraisal system is certified.

Setting rates of basic pay following a break in SES service. Upon reappointment to the SES, an agency may set the rate of basic pay of a former senior executive at any rate within the SES rate range if there has been a break in SES service of more than 30 days. If there has been a break in SES service of 30 days or less, the senior executive's rate of basic pay must be set at a rate at least equivalent to the employee's former SES rate of basic pay.

Performance Awards. As a result of the implementation of the new SES performance-based pay system, the limit on the total amount of performance awards that may be granted in a fiscal year and the actual amount of an individual performance award that may be granted will be greater than in the past, since both are derived from an SES rate of basic pay that now includes any applicable locality payment. To determine the total amount of performance awards that may be granted in FY 2004, agencies must include any applicable locality payments in effect at the end of FY 2003 for the purpose of applying the limitations in § 534.405(b)(1) and (2).

Additional Payments. Agencies must review any determination to provide additional payments to a senior executive that are calculated based on the senior executive's rate of basic pay (*e.g.*, retention allowances and extended assignment incentives). As a result of conversion to the new SES pay system, a senior executive's rate of basic pay has increased significantly to include locality payments. Payments that are calculated based on a senior executive's rate of basic pay also may have increased significantly.

Aggregate Limitation on Pay

Higher aggregate limitation on pay for senior executives and senior professionals. Section 1322 of the Chief Human Capital Officers Act of 2002 (Pub. L. 107–296, Title XIII, November 25, 2002) added a new paragraph (d) to 5 U.S.C. 5307 that permits agencies with certified appraisal systems for their senior executives and senior professionals, as applicable, to apply a higher annual aggregate limitation on pay to those employees. The higher annual aggregate limitation on pay is equivalent to the total annual compensation payable to the Vice President, under 3 U.S.C. 104, on the last day of the applicable calendar year ($203,000 in 2004). Agencies that are not covered by the performance appraisal system requirements set forth in 5 U.S.C., chapter 43, but which are subject to the aggregate limitation in 5 U.S.C. 5307, also must have a certified appraisal system in order to apply the higher aggregate limitation on pay to their senior executives and senior professionals.

Agencies without certification must continue to apply an annual aggregate

limitation on pay equivalent to the rate for level I of the Executive Schedule ($174,500 in 2004). The level I aggregate limitation also continues to apply to (1) other employees covered by 5 U.S.C. 5307; (2) employees paid under the Executive Schedule established under 5 U.S.C., chapter 53, subchapter II; and (3) equivalent categories of employees whose pay is linked directly to a rate of pay under the Executive Schedule. In addition, section 1322 of the Act increases the annual aggregate limitation on pay for judicial branch employees paid under 28 U.S.C. 332(f), 603, and 604. It also authorizes the Director of the Administrative Office of the United States Courts to prescribe regulations to implement the higher annual aggregate limitation on pay. The law requires the regulations of the Administrative Office of the United States Courts to be consistent with OPM's and OMB's regulations regarding certification.

Definitions. In § 530.202, we have revised the definition of *aggregate compensation* to clarify that it excludes student loan repayments under 5 U.S.C. 5379 and nonforeign area cost-of-living allowances under 5 U.S.C. 5941(a)(1). We have added a definition of *aggregate limitation* to avoid repeated extended references to the two statutory limitations—*i.e.*, the limitation in effect at the end of the calendar year that is equal to the rate for level I of the Executive Schedule or the rate payable to the Vice President, whichever limitation applies to the employee. Finally, we have revised the definition of *estimated aggregate compensation* to clarify that the term refers to the estimated compensation an employee would receive but for the application of the aggregate limitation to future payments. At any point during a calendar year, an agency may estimate the aggregate compensation that would be received but for application of the aggregate limitation to future payments. Excess amounts already deferred for payment at the beginning of the next calendar year are not considered in computing the current estimate, since those payments are not projected to be received in the current calendar year.

Also in § 530.202, we have added extended assignment incentives authorized under 5 U.S.C. 5757 to the list of payments that are covered by the definition of *aggregate compensation* and *discretionary payments.* Extended assignment incentives, which were established by section 207 of Public Law 107–273 (November 2, 2002), permit the head of an Executive agency to pay an extended assignment incentive to certain Federal employees assigned to positions located in a territory or possession of the United States, the Commonwealth of Puerto Rico, or the Commonwealth of the Northern Mariana Islands.

Deferring Discretionary Payments. We have clarified § 530.203(d) to require that a retention allowance must be reduced or terminated before deferring any other discretionary payment, consistent with 5 CFR 575.307(a). However, for a discretionary payment to be considered deferred, its payment in the current calendar year must be required by a mandatory personnel policy or it must have been officially approved to be paid within the current calendar year. Otherwise, the setting of the payment date for a discretionary payment in the next calendar year is not a deferral under these regulations and has no effect on the payment of retention allowances in the current year.

Overestimating an Employee's Aggregate Compensation. In § 530.203, we have added a new paragraph (h) to address situations where an agency overestimates an employee's aggregate annual compensation for the calendar year at an earlier point in the year and, as a result, unnecessarily defers payments. In this case, an agency may make corrective payments in the current calendar year rather than waiting to make the payments at the beginning of the next calendar year.

Change in Aggregate Limitation on Pay. In § 530.203(g) and (h), we have provided rules for taking corrective actions when the aggregate limitation is increased or decreased during a calendar year as a result of gaining or losing certification of a senior executive performance appraisal system.

Lump-Sum Payments in Excess of Aggregate Limitation on Pay. We have amended § 530.204(c) to require that if an employee transfers to another agency, the gaining agency is responsible for making any lump-sum payment in excess of the aggregate limitation. The previous employing agency must provide the gaining agency with documentation regarding the employee's excess amount. The previous employing agency must provide a fund transfer equal to the total cost of the lump-sum payment to the gaining agency through the Department of the Treasury's Intra-Governmental Payment and Collection System. If an employee leaves Federal service, the current employing agency is responsible for making the lump-sum payment to the employee as provided in § 530.204(d).

Recordkeeping. In § 530.205, we have added a number of specific recordkeeping requirements that deal with the source and payment of deferred excess amounts, consistent with other provisions in the regulations.

Plain Language. OPM is also taking this opportunity to revise and reorganize part 530, subpart B, Aggregate Limitation on Pay, to improve its readability. We also have made some substantive changes to the regulations to assist agencies in administering them. In addition, we have replaced the verb ''shall'' with ''must'' for added clarity and readability. In this regard, any provision using the verb ''must'' is intended to have the same meaning and effect as previous provisions using ''shall.''

Extended Award Authority

The Federal Employees Pay Comparability Act of 1990 established a specific authority to pay performance-based cash awards to employees paid under the General Schedule (GS) (5 U.S.C. 4505a). This law specifies that the President may extend application of this authority to groups of employees not covered by the General Schedule at the request of the agency head. This extension authority was delegated by E.O. 12828 to the Director of OPM. Over the years some agencies have incorrectly cited this law as the authority under which they pay performance-based awards to non-GS employees. OPM is extending by regulation the provisions of 5 U.S.C. 4505a to non-GS employees covered by 5 U.S.C. chapter 45 and 5 CFR part 451 who are not otherwise eligible for performance-based cash awards under another specific statutory authority, including 5 U.S.C. 5384 (SES performance awards). Extending this authority will avoid incorrect references and citations and provide agencies with a specific authority to grant performance-based cash awards to their SL/ST (and other non-GS) employees.

Recruitment and Relocation Bonuses and Retention Allowances

We have made technical amendments to the regulations on recruitment and relocation bonuses and retention allowances in 5 CFR part 575 to conform to the changes made to the aggregate limitation on pay in 5 CFR part 531, subpart B.

Regulatory Flexibility Act

I certify that these regulations will not have a significant economic impact on a substantial number of small entities because they will apply to only Federal agencies and employees.

E.O. 12866, Regulatory Review

This rule has been reviewed by the Office of Management and Budget in accordance with E.O. 12866.

List of Subjects in parts 451, 530, 534, 575

Decorations, medals, awards, Government employees, Law Enforcement Officers, Reporting and recordkeeping requirements, Hospitals, Students, and Wages.

Office of Personnel Management.

Kay Coles James,

Director.

Accordingly, OPM is proposing to amend parts 451, 530, 534, and 575 of title 5 of the Code of Federal Regulations as follows:

PART 451—EMPLOYEE AWARDS

Subpart A—Agency Awards

1. The authority citation for part 451 continues to read as follows:

Authority: 5 U.S.C. 4302, 4501–4509; E.O. 11438, 12828.

2. In § 451.101 paragraph (d), remove the reference ''§ 534.403'' and add the reference ''§ 534.405'' in its place, and add a new paragraph (e) to read as follows:

§ 451.101 Authority and coverage.

* * * * *

(e) An agency may grant performance-based cash awards (*i.e.*, on the basis of a rating of record) under the authority of 5 U.S.C. 4505a and the provisions of this part to eligible non-GS employees who are covered by 5 U.S.C. chapter 45 and this part, and who are not otherwise covered by an explicit statutory authority for the payment of such awards, including 5 U.S.C. 5384 (SES performance awards).

§ 451.104 [Amended]

3. In § 451.104(a)(3), remove the reference ''§ 534.403'' and add the reference ''§ 534.405'' in its place.

PART 530—PAY RATES AND SYSTEMS (GENERAL)

4. In part 530, the authority citation is revised to read as follows:

Authority: 5 U.S.C. 5305 and 5307; E.O. 12748, 56 FR 4521, 3 CFR, 1991 Comp., p. 316; Subpart B also issued under secs. 302(c) and 404(c), Public Law 101–509, 104 Stat. 1462 and 1466 (5 U.S.C. 5304 note, 5305 note).

Subpart C also issued under sec. 4, Public Law 103–89, 107 Stat. 983 (5 U.S.C. 5401 note); and sec. 1322, Title XIII, Public Law 107–296, 116 Stat. 2297 (5 U.S.C. 5307).

4a. Subpart B of Part 430 is revised to read as follows:

Subpart B—Aggregate Limitation on Pay

Sec.
530.201 Purpose.
530.202 Definitions.
530.203 Administration of aggregate limitation on pay.
530.204 Payment of excess amounts.
530.205 Records.

Subpart B—Aggregate Limitation on Pay

§ 530.201 Purpose.

This subpart establishes regulations for limiting an employee's aggregate annual compensation. An employee's aggregate compensation received in any given calendar year may not exceed the rate of pay for level I of the Executive Schedule or the rate payable to the Vice President at the end of the calendar year, whichever is applicable to the employee based on the certification status of the performance appraisal system covering that employee under 5 CFR part 430, subpart D. These regulations must be applied in conjunction with 5 U.S.C. 5307.

§ 530.202 Definitions.

In this subpart:

Agency means an executive agency as defined at 5 U.S.C. 105.

Aggregate compensation means the total of—

(1) Basic pay received as an employee of the executive branch or as an employee outside the executive branch to whom the General Schedule applies;

(2) Locality payments under 5 U.S.C. 5304; continued rate adjustments under 5 CFR part 531, subpart G; or special pay adjustments for law enforcement officers under section 404 of the Federal Employees Pay Comparability Act of 1990 (Public Law 101–509);

(3) Premium pay under 5 U.S.C. chapter 53, subchapter IV;

(4) Premium pay under 5 U.S.C. chapter 55, subchapter V;

(5) Incentive awards and performance-based cash awards under 5 U.S.C. chapters 45 and 53;

(6) Recruitment and relocation bonuses under 5 U.S.C. 5753;

(7) Retention allowances under 5 U.S.C. 5754 and extended assignment incentives under 5 U.S.C. 5757;

(8) Supervisory differentials under 5 U.S.C. 5755;

(9) Post differentials under 5 U.S.C. 5925;

(10) Danger pay allowances under 5 U.S.C. 5928;

(11) Post differentials based on environmental conditions for employees stationed in nonforeign areas under 5 U.S.C. 5941(a)(2);

(12) Physicians' comparability allowances under 5 U.S.C. 5948;

(13) Continuation of pay under 5 U.S.C. 8118;

(14) Lump-sum payments in excess of the aggregate limitation on pay as required by § 530.204; and

(15) Other similar payments authorized under title 5, United States Code, excluding—

(i) Overtime pay under the Fair Labor Standards Act of 1938, as amended, and 5 CFR part 551;

(ii) Severance pay under 5 U.S.C. 5595;

(iii) Lump-sum payments for accumulated and accrued annual leave upon separation under 5 U.S.C. 5551 or 5552;

(iv) Back pay awarded to an employee under 5 U.S.C. 5596 because of an unjustified personnel action;

(v) Student loan repayments under 5 U.S.C. 5379; and

(vi) Nonforeign area cost-of-living allowances under 5 U.S.C. 5941(a)(1).

Aggregate limitation means the limitation on aggregate compensation received in any given calendar year as established by 5 U.S.C. 5307. For an executive branch employee (including employees in Senior Executive Service positions paid under 5 U.S.C. 5383 and employees in senior-level or scientific or professional positions paid under 5 U.S.C. 5376), a General Schedule employee in the legislative branch, or General Schedule employee in the judicial branch (excluding those paid under 28 U.S.C. 332(f), 603, and 604), the limitation on aggregate compensation is equal to the rate for level I of the Executive Schedule in effect at the end of the applicable calendar year. For an employee in a Senior Executive Service position paid under 5 U.S.C. 5383 and an employee in a senior-level or scientific or professional position paid under 5 U.S.C. 5376 covered by an applicable performance appraisal system that has been certified under 5 CFR part 430, subpart D, the limitation on aggregate compensation is equal to the total annual compensation payable to the Vice President under 3 U.S.C. 104 at the end of a calendar year.

Basic pay means the total amount of pay received at a rate fixed by law or administrative action for the position held by an employee, before any deductions. Basic pay includes night and environmental differentials for prevailing rate employees under 5 U.S.C. 5343(f) and 5 CFR 532.511. Basic pay excludes additional pay of any other kind, including locality payments under 5 U.S.C. 5304.

Discretionary payment means a payment an agency has discretion to make or not to make to an employee. A retention allowance under 5 U.S.C. 5754 and an extended assignment incentive under 5 U.S.C. 5757 are discretionary payments. However, other payments that are preauthorized to be made to an employee at a regular fixed rate each pay period are not discretionary payments.

Employee has the meaning given that term in 5 U.S.C. 2105.

Estimated aggregate compensation means the agency's projection of the aggregate compensation an employee actually would receive during a calendar year but for application of the aggregate limitation to future payments. This projection must be based upon known factors. Estimated aggregate compensation includes—

(1) The total amount of basic pay the employee will receive during the calendar year;

(2) Any lump-sum payment of excess amounts from a previous calendar year, as described in § 530.204;

(3) The total amount of nondiscretionary payments the employee would be entitled to receive during the calendar year; and

(4) The total amount of discretionary payments the employee would be authorized to receive during the calendar year.

§ 530.203 Administration of aggregate limitation on pay.

(a) Except as provided in paragraph (b) of this section, no executive branch employee or General Schedule employee in the legislative branch (or General Schedule employee in the judicial branch, excluding those paid under 28 U.S.C. 332(f), 603, and 604), may receive any allowance, differential, bonus, award, or other similar cash payment under title 5, United States Code, in any calendar year which, in combination with the employee's basic pay (whether received under title 5, United States Code, or otherwise), would cause the employee's aggregate compensation to exceed the rate for level I of the Executive Schedule on the last day of that calendar year (*i.e.*, the aggregate limitation).

(b)(1) Subject to paragraph (b)(2) of this section, an employee in a Senior Executive Service position paid under 5 U.S.C. 5383 and an employee in a senior-level or scientific or professional position paid under 5 U.S.C. 5376 may not receive any allowance, differential, bonus, award, or other similar cash payment under title 5, United States Code, in any calendar year which, in combination with the employee's basic pay, would cause the employee's aggregate compensation to exceed the rate of pay for level I of the Executive Schedule.

(2) An employee covered by a performance appraisal system that has been certified under 5 CFR part 430, subpart D, may not receive any allowance, differential, bonus, award, or other similar cash payment under title 5, United States Code, in any calendar year which, in combination with the employee's basic pay, would cause the employee's aggregate compensation to exceed the total annual compensation payable to the Vice President under 3 U.S.C. 104 on the last day of that calendar year (*i.e.*, the aggregate limitation).

(3) An agency must make corrective actions as provided in paragraphs (g) and (h) of this section if the agency underestimated or overestimated an employee's aggregate compensation in a calendar year as a result of receiving or losing certification of its applicable performance appraisal system under 5 CFR part 430, subpart D.

(c) The aggregate limitations described in paragraphs (a) and (b) of this section apply to the aggregate compensation an employee actually received during the calendar year without regard to when the compensation was earned.

(d) When an agency authorizes a discretionary payment for an employee, the agency must defer any portion of such payment that, when added to the estimated aggregate compensation the employee is projected to receive, would cause the employee's aggregate compensation during the calendar year to exceed the applicable aggregate limitation. Any portion of a discretionary payment deferred under this paragraph must be available for payment as provided in § 530.204. Special rules apply to the authorization and payment of a retention allowance, which may not be deferred. (*See* 5 CFR 575.306(b) and 575.307(a).) A retention allowance must be reduced or terminated before deferring any other type of discretionary payment, as long as the other discretionary payment is required to be paid within the current calendar year under a mandatory personnel policy or has been officially approved by an authorized agency official for payment within the current calendar year. When a discretionary payment is authorized but not required to be paid in the current calendar year, an agency official's decision to set the payment date in the next calendar year is not considered a deferral under this paragraph.

(e) An agency may not defer or discontinue nondiscretionary payments for any period of time to make a discretionary payment that would otherwise cause an employee's pay to exceed the applicable aggregate limitation. An agency may not defer or discontinue basic pay under any circumstance.

(f) If, after an agency defers discretionary payments as required by paragraph (d) of this section, the estimated aggregate compensation to which an employee is entitled exceeds the applicable aggregate limitation, the agency must defer all nondiscretionary payments (other than basic pay) as necessary to avoid payments in excess of that limitation. An agency must defer all nondiscretionary payments at the time when otherwise continuing to pay such payments would cause an employee's estimated aggregate compensation for that calendar year to exceed the applicable aggregate limitation. An agency must pay any portion of a nondiscretionary payment deferred under this paragraph at a later date, as provided in § 530.204.

(g)(1) If an agency determines that it underestimated an employee's aggregate compensation at an earlier date in the calendar year, or the aggregate limitation applicable to the employee is reduced during the calendar year, the sum of the employee's remaining payments of basic pay may exceed the difference between the aggregate compensation the employee has actually received to date in that calendar year and the applicable aggregate limitation. In such cases, the employee will become indebted to the Federal Government for any amount paid in excess of the applicable aggregate limitation. The head of the agency may waive the debt under 5 U.S.C. 5584, if warranted.

(2) To the extent that any excess amount is attributable to amounts that should have been deferred and would have been payable at the beginning of the next calendar year, an agency must extinguish the excess amount on January 1 of the next calendar year. As part of the correction of the error, the agency must deem the excess amount to have been paid on January 1 of the next calendar year (when the debt was extinguished) as if it were a deferred excess payment, as described in § 530.204, and must consider this deemed deferred excess payment to be part of the employee's aggregate compensation for the new calendar year.

(3) To the extent that any excess amount is attributable to retention allowances that the agency inadvertently did not reduce or terminate under 5 CFR 575.307(a), the

employee will become indebted to the Federal Government for any amount attributable to retention allowance payments that were paid in excess of the applicable aggregate limitation. The head of the agency may waive the debt under 5 U.S.C. 5584, if warranted.

(h) If an agency determines that it overestimated an employee's aggregate compensation at an earlier date in the calendar year, which caused the agency to defer payments unnecessarily under this section, or the aggregate limitation applicable to the employee is increased during the calendar year, the agency may make appropriate corrective payments to the employee during the calendar year, notwithstanding § 530.204.

§ 530.204 Payment of excess amounts.

(a) An agency must pay the amounts that were deferred because they were in excess of the aggregate limitation (as described in § 530.203) as a lump-sum payment at the beginning of the following calendar year, except as otherwise provided in this section. This payment is part of the employee's aggregate compensation for the new calendar year.

(b) If a lump-sum payment under paragraph (a) of this section causes an employee's estimated aggregate compensation to exceed the aggregate limitation in the current calendar year, an agency must consider only the employee's basic pay that is expected to be paid in the current year in determining the extent to which the lump-sum payment may be paid. An agency must defer all other payments, as provided in § 530.203, in order to pay as much of the lump-sum excess amount as possible. Any payments deferred under this paragraph, including any portion of the lump-sum excess amount that was not payable, are payable at the beginning of the next calendar year, as provided in paragraph (a) of this section.

(c) If an employee transfers to another agency, the gaining agency is responsible for making any lump-sum payment required by paragraph (a) of this section. The previous employing agency must provide the gaining agency with documentation regarding the employee's excess amount, as provided in § 530.205. The previous employing agency must provide a fund transfer equal to the total cost of the lump-sum payment to the gaining agency through the Department of the Treasury's Intra-Governmental Payment and Collection System. If an employee leaves Federal service, the employing agency is responsible for making the lump-sum payment to the employee as provided in paragraph (d) of this section.

(d) An agency must pay any excess amount regardless of the calendar year limitation under the following conditions:

(1) If an employee dies, the employing agency must pay the entire excess amount as part of the settlement of accounts, in accordance with 5 U.S.C. 5582.

(2) If an employee separates from Federal service, the employing agency must pay the entire excess amount following a 30-day break in service. If the individual is reemployed in the Federal service within the same calendar year as the separation, any previous payment of an excess amount must be considered part of that year's aggregate compensation for the purpose of applying the aggregate limitation for the remainder of the calendar year.

§ 530.205 Records.

An agency must maintain appropriate records to administer this subpart and must transfer such records to any agency to which an employee may transfer. An agency must make such records available to any agency that may employ the employee later during the same calendar year. An agency's records must document the source of any deferred excess amount remaining to the employee's credit at the time of separation from the agency. In the case of an employee who separates from Federal service for at least 30 days, the agency records also must document any payment of a deferred excess amount made by the agency after separation.

PART 534—PAY UNDER OTHER SYSTEMS

5. The authority citation for part 534 is revised to read as follows:

Authority: 5 U.S.C. 1104, 3161(d), 5307, 5351, 5352, 5353, 5376, 5382, 5383, 5384, 5385, 5541, 5550a, and sec. 1125, Public Law 108–136, 117 Stat. 1392.

Subpart D—Pay and Performance Awards Under the Senior Executive Service

6. Section 534.401 is revised to read as follows:

§ 534.401 Purpose.

This subpart contains the rules for setting and adjusting rates of basic pay and granting performance awards for members of the Senior Executive Service (SES), as provided by 5 U.S.C. 5382, 5383, and 5384. An agency must set and adjust the rate of basic pay for an SES member on the basis of the employee's performance and/or contribution to the agency's performance, as determined by the agency through the administration of its performance management systems for senior executives. These regulations must be read in combination with applicable statutes and with the regulations for the approval of an SES performance management system under 5 CFR part 430, subpart C, and certification of an SES performance appraisal system under 5 CFR part 430, subpart D.

7. Section 534.402 is revised to read as follows:

§ 534.402 Definitions.

In this subpart—

Agency means an executive agency or military department, as defined by 5 U.S.C. 105 and 102.

Authorized agency official means the head of an agency or an official who is authorized to act for the head of the agency in the matter concerned. The agency's Inspector General is the *authorized agency official* for senior executive positions in the Office of the Inspector General, consistent with the requirements in section 3(a) of the Inspector General Act of 1978.

Outstanding performance means performance that substantially exceeds the normally high performance expected of any senior executive, as evidenced by exceptional accomplishments or contributions to the agency's performance.

PRB means Performance Review Board, as described in § 430.310.

Rate of basic pay means the rate of pay fixed by law or administrative action for the senior executive, within the established SES rate range or, in the case of a senior executive entitled to pay retention, the employee's retained rate of pay, excluding any applicable locality-based comparability payments under 5 U.S.C. 5304, but before any deductions and exclusive of additional pay of any other kind.

Senior executive means a member of the Senior Executive Service (SES).

SES or ES rate means a rate of basic pay within the SES or ES rate range assigned to a member of the SES under § 534.403(a).

SES or ES rate range means the range of rates of basic pay established for the SES under 5 U.S.C. 5382 and § 534.403(a).

§§ 534.403 and 534.405 [Redesignated as §§ 534.405 and 534.408]

8. Redesignate §§ 534.403 and 534.405 as §§ 534.405 and 534.408 respectively.

9. Add new § 534.403 to read as follows:

§ 534.403 SES rate range.

(a) *SES rate range.* (1) On the first day of the first applicable pay period beginning on or after January 1, 2004, the minimum rate of basic pay of the SES rate range is set at an amount equal to the minimum rate of basic pay under 5 U.S.C. 5376 for senior-level positions (excluding any locality-based comparability payment under 5 U.S.C. 5304). An SES member may not receive less than the minimum rate of the SES rate range. Except as provided in paragraph (a)(2) of this section, the maximum rate of basic pay of the SES rate range is set at the rate for level III of the Executive Schedule. An SES member's rate of basic pay must be set at one of the rates within the SES rate range based on the senior executive's performance and/or contribution to the agency's performance.

(2) The maximum rate of basic pay of the SES rate range is set at the rate for level II of the Executive Schedule for senior executives in an agency who are covered by a performance appraisal system that makes meaningful distinctions based on relative performance, as certified by the Office of Personnel Management (OPM), with concurrence by the Office of Management and Budget (OMB), under 5 U.S.C. 5307(d) and 5 CFR part 430, subpart D. A senior executive's rate of basic pay may not exceed the maximum rate of the applicable SES rate range, except as provided in § 534.404(h)(2).

(3) Rates of basic pay higher than the rate for level III of the Executive Schedule but less than or equal to the rate for level II of the Executive Schedule generally are reserved for those senior executives who have demonstrated the highest levels of individual performance and/or made the greatest contributions to the agency's performance, as determined by the agency through the administration of its performance appraisal system for senior executives, or, in the case of newly-appointed senior executives, those who possess superior leadership or other competencies, consistent with the agency's strategic human capital plan.

(b) *Suspension of certification of performance appraisal system.* A senior executive whose rate of basic pay is higher than the rate for level III of the Executive Schedule may not suffer a reduction in pay because his or her agency's applicable performance appraisal system certification is suspended under 5 CFR 430.405(h). The senior executive will continue to receive his or her current SES rate and is not eligible for a pay adjustment until the senior executive is assigned to a position that would allow the employee to receive a pay adjustment or until certification of the employing agency's applicable performance appraisal system is reinstated under 5 CFR part 430, subpart D. The SES rate of pay is not considered a retained rate of pay for the purpose of applying 5 U.S.C. 3594 and 5 CFR part 359, subpart G, or 5 U.S.C. 5363 and 5 CFR 536.104.

10. Section 534.404 is revised to read as follows:

§ 534.404 Setting and adjusting pay for senior executives.

(a) *Setting pay upon initial appointment to the SES.* An authorized agency official may set the rate of basic pay of an individual at any rate within the SES rate range upon initial appointment to the SES, subject to the limitation on the maximum rate of basic pay in § 534.403(a)(2). Rates of basic pay above the rate for level III of the Executive Schedule but less than or equal to the rate for level II of the Executive Schedule generally are reserved for those newly appointed senior executives who possess superior leadership or other competencies, as determined by the agency as part of its strategic human capital plan. In setting a new senior executive's rate of basic pay, an agency must consider the nature and quality of the individual's experience, qualifications, and accomplishments as they relate to the requirements of the SES position, as well as the individual's current responsibilities.

(b) *Adjusting the pay of SES members.* (1) An authorized agency official may adjust (increase or reduce) the rate of basic pay of a senior executive consistent with the agency's plan for setting and adjusting SES rates of basic pay under paragraph (g) of this section.

(2) An agency may provide an increase in pay only upon a determination by the authorized agency official that the senior executive's individual performance and/or contributions to agency performance so warrant. In assessing a senior executive's performance and/or contribution to the agency's performance, the authorized agency official may consider such things as unique skills, qualifications, or competencies that the individual possesses, and their significance to the agency's performance, as well as the senior executive's current responsibilities. Senior executives who demonstrate the highest levels of individual performance and/or make the greatest contributions to the agency's performance, as determined by the agency through the administration of its performance appraisal system, or, in the case of newly-appointed senior executives, those who possess superior leadership or other competencies, as determined by the agency as part of its strategic human capital plan, must receive the highest rates of basic pay and pay adjustments.

(3) A senior executive who receives an annual summary rating of outstanding performance must be considered for an annual pay increase, subject to the limitation on the maximum rate of basic pay in § 534.403(a)(2).

(4) A senior executive who receives a summary rating of less than fully successful may not receive an increase in pay for the current appraisal period.

(5) An authorized agency official may reduce the rate of basic pay of a senior executive for performance and/or disciplinary reasons, consistent with the restrictions on reducing the rate of basic pay of a career senior executive in paragraph (j) of this section and in § 534.406(b).

(c) *12-month rule.* (1) An authorized agency official may adjust (*i.e.*, increase or reduce) the rate of basic pay of a senior executive not more than once during any 12-month period, except as provided in paragraph (c)(4) of this section.

(2) The following pay actions are considered pay adjustments for the purpose of applying this paragraph:

(i) The setting of an individual's rate of basic pay upon initial appointment or reappointment to the SES under paragraphs (a) and (i)(1) of this section and upon reinstatement to the SES under paragraph (i)(2)(ii) of this section; and

(ii) Any adjustment (increase or reduction) in an SES rate of basic pay granted to a senior executive prior to certification of the applicable agency performance appraisal system as provided in paragraph (d) of this section or after certification of the applicable agency performance appraisal system as provided in paragraph (e) of this section.

(3) The following pay actions are not considered pay adjustments for the purpose of applying this paragraph:

(i) The conversion of senior executives to the new SES pay system under § 534.406 and the conversion of other employees to equivalent senior executive positions;

(ii) A determination by an authorized agency official to make a zero adjustment in pay after reviewing a senior executive's annual summary rating; and

(iii) A zero adjustment in pay made during the 12-month period preceding

the first day of the first applicable pay period beginning on or after January 1, 2004, caused by the former limitation on basic pay plus locality-based comparability payments under 5 U.S.C. 5304(g)(2) for a senior executive who was granted an increase in his or her rate of basic pay that did not result in an actual increase in pay.

(4) An authorized agency official may approve increases in a senior executive's rate of basic pay more than once during a 12-month period if the agency head or designee who performs the functions described in 5 CFR 430.404(a)(5) or (6) determines that—

(i) The senior executive's exceptionally meritorious accomplishment significantly contributes to the agency's performance;

(ii) The senior executive is reassigned to a position with substantially greater scope and responsibility;

(iii) The retention of the senior executive is critical to the mission of the agency and the senior executive would be likely to leave the agency in the absence of a pay increase; or

(iv) Such action conforms to an otherwise applicable executive appraisal and pay adjustment cycle (*e.g.*, in the case of a senior executive who was appointed to an SES position within the past 12 months or a senior executive who was transferred to an SES position from an agency with a different senior executive appraisal and pay adjustment cycle within the past 12 months).

(5) Any pay adjustment made as a result of a determination under paragraph (b)(4) of this section is considered a pay adjustment for the purpose of applying § 534.404(c) and begins a new 12-month period.

(d) *Adjustments in pay prior to certification of applicable performance appraisal system.* An authorized agency official may increase a senior executive's rate of basic pay converted under § 534.406 on the first day of the first applicable pay period beginning on or after January 1, 2004, or on any date thereafter prior to obtaining certification under 5 CFR part 430, subpart D, but only up to the rate for level III of the Executive Schedule. The authorized agency official may provide such an increase if warranted under the conditions prescribed in paragraph (b)(2) of this section and the senior executive is otherwise eligible for such a pay increase (*i.e.*, he or she did not receive a pay adjustment under § 534.404(c) during the previous 12-month period). An adjustment in pay made under this paragraph is considered a pay adjustment for the purpose of applying § 534.404(c).

(e) *Adjustments in pay after certification of applicable performance appraisal system.* In the case of an agency that obtains certification of a performance appraisal system for senior executives under 5 CFR part 430, subpart D, an authorized agency official may increase a covered senior executive's rate of basic pay up to the rate for level II of the Executive Schedule, consistent with the limitation on increasing pay above the rate for level III of the Executive Schedule in § 534.403(a)(2). The authorized agency official may provide an increase in pay if warranted under the conditions prescribed in paragraph (b)(2) of this section if the senior executive is otherwise eligible for such a pay increase (*i.e.*, he or she did not receive a pay adjustment under § 534.404(c) during the previous 12-month period). The agency head or designee who performs the functions described in 5 CFR 430.404(a)(5) and (6) may make exceptions to the 12-month rule in paragraph (c) of this section under certain limited conditions prescribed in paragraph (c)(4) of this section. An increase in pay made under this paragraph is considered a pay adjustment for the purpose of applying § 534.404(c).

(f) *Effect of Additional increases in Executive Schedule rates of pay.* If there is an additional increase in the rates for the Executive Schedule in a calendar year, and if that increase becomes effective on the first day of the first pay period beginning on or after January 1 (*i.e.*, the date prescribed in 5 U.S.C. 5318), an agency may review any previous determination to adjust the pay of a senior executive that was made effective on or after the effective date of the first increase in the rates for the Executive Schedule to determine whether, and to what extent, an additional pay increase may be warranted for senior executives based on the same criteria used for the previous determination. If the agency determines that an additional pay increase is warranted, that increase must be made effective as of the effective date of the previous pay increase and is not considered a pay adjustment for the purpose of applying § 534.404(c).

(g) *Agency plan for setting and adjusting SES rate of basic pay.* Each agency must establish a plan for setting and adjusting the rates of basic pay for SES members. The agency's plan must require that any decisions to adjust pay must reflect meaningful distinctions among senior executives based on individual performance and/or contribution to agency performance and must include—

(1) The criteria that will be used to set and adjust a senior executive's rate of basic pay;

(2) The criteria that will be used to set and adjust a senior executive's rate of basic pay at a rate that exceeds the rate for level III of the Executive Schedule if the applicable agency performance appraisal system has been certified under 5 CFR part 430, subpart D;

(3) The designation of the authorized agency official who has authority to set and adjust SES rates of pay for individual senior executives, subject to the requirement that the agency head or designee who performs the functions described in 5 CFR 430.404(a)(5) and (6) must approve any determination to set a senior executive's rate of basic pay higher than the rate for level III of the Executive Schedule and must approve any determination to increase a senior executive's rate of basic pay more than once in any 12-month period; and

(4) The administrative and management controls that will be applied to ensure compliance with applicable statutes, OPM's regulations, the agency's plan, and, where applicable, the certification requirements set forth in 5 CFR 430, subpart D, and the limitation on the maximum rate of basic pay in § 534.403(a)(2).

(h) *Setting pay upon transfer.* (1) An authorized agency official may set the pay of a senior executive transferring from another agency at any rate within the SES rate range, subject to the limitation on the maximum rate of basic pay in § 534.403(a)(2) and the restrictions on reducing the pay of career senior executives in paragraph (h)(2) of this section (upon transfer to an agency whose applicable performance appraisal system is not certified) and in § 534.406(b) (for 12 months following the effective date of the new SES pay system). If pay is set at the same SES rate the senior executive received in his or her former agency, the action is not considered a pay adjustment for the purpose of applying § 534.404(c).

(2) A senior executive whose rate of basic pay is higher than the rate for level III of the Executive Schedule may not suffer a reduction in pay as a result of transferring from an agency with a maximum SES rate of basic pay equal to the rate for level II of the Executive Schedule to an agency with a maximum SES rate of basic pay equal to the rate for level III of the Executive Schedule. The senior executive will continue to receive his or her current SES rate and is not eligible for a pay adjustment until the senior executive is assigned to a

position that would allow the employee to receive a pay adjustment or the employing agency's applicable performance appraisal system is certified under 5 CFR part 430, subpart D. The SES rate of pay is not considered a retained rate of pay for the purpose of applying 5 U.S.C. 3594 and 5 CFR part 359, subpart G, or 5 U.S.C. 5363 and 5 CFR 536.104.

(i) *Setting pay following a break in SES service.* (1) *General.* Upon reappointment to the SES, an authorized agency official may set the rate of basic pay of a former senior executive at any rate within the SES rate range, subject to the limitations in § 534.403(a), if there has been a break in SES service of more than 30 days. If there has been a break in SES service of 30 days or less, the senior executive's rate of basic pay must be set at a rate at least equal to the employee's former SES rate of basic pay. Setting a rate of basic pay upon reappointment to the SES is considered a pay adjustment under § 534.404(c).

(2) *Reinstatement from a Presidential appointment requiring Senate confirmation.* The following provisions apply to a former career senior executive who is reinstated under 5 CFR 317.703:

(i) If the individual elected to remain subject to the SES pay provisions while serving under a Presidential appointment, his or her SES rate may be adjusted upon reinstatement to the SES, whether in the agency where the individual held the Presidential appointment or in another agency, if at least 12 months have elapsed since the employee's last SES pay adjustment, unless a determination is made under § 534.404(c)(4) that an additional pay increase is warranted. Any pay adjustment must be made in accordance with paragraphs (b), (d), and (e) of this section and the agency's plan for adjusting SES rates of pay in paragraph (g) of this section.

(ii) If the individual did not elect to remain subject to the SES pay provisions while serving under a Presidential appointment, his or her SES rate may be set upon reinstatement to the SES at any rate within the SES rate range, subject to the limitations in § 534.403(a).

(iii) Setting a rate of basic pay upon reinstatement to the SES under paragraphs (i)(2)(i) and (ii) of this section is considered a pay adjustment for the purpose of applying § 534.404(c).

(j) *Restrictions on reducing the pay of career senior executives.* (1) An authorized agency official may reduce a career senior executive's SES rate of basic pay by not more than 10 percent for performance or disciplinary reasons, subject to the restriction on reducing the pay of career senior executives in § 534.406(b) or setting pay below the minimum rate of the SES rate range in § 534.403(a).

(2) The SES rate of basic pay of a career senior executive may be reduced without the employee's consent by the senior executive's agency or upon transfer of function to another agency only—

(i) If the senior executive has received a less than fully successful annual summary rating under 5 CFR part 430, subpart C, or has otherwise failed to meet the performance requirements for a critical element as defined in 5 CFR 430.303; or

(ii) As a disciplinary or adverse action resulting from conduct-related activity, including, but not limited to, misconduct, neglect of duty, or malfeasance.

(3) Prior to reducing a career senior executive's rate of basic pay, the agency must provide the senior executive with the following:

(i) Written notice of such reduction at least 15 days in advance of its effective date;

(ii) A reasonable period of time, but not less than 7 days, for the senior executive to respond to such notice orally and/or in writing and to furnish affidavits and other documentary evidence in support of that response;

(iii) An opportunity to be represented in the matter by an attorney or other representative;

(iv) A written decision and specific reasons for the pay reduction at the earliest practicable date after the senior executive's response, if any; and

(v) An opportunity to request, within 7 days after the date of that decision, reconsideration by the head of the agency, whose determination with respect to that request will be final and not subject to further review.

11. In newly redesignated § 534.405, revise paragraphs (a)(2)(i), (b), (c), and (f) to read as follows:

§ 534.405 Performance Awards.

(a) * * *

(2) * * *

(i) A former SES career appointee who elected to retain award eligibility under 5 CFR part 317, subpart H. If the rate of basic pay of the individual is higher than the maximum rate of basic pay for the applicable SES rate range, the maximum rate of that SES rate range is used for crediting the agency award pool under paragraph (b) of this section and the amount the individual may receive under paragraph (c) of this section.

* * * * *

(b)(1) The total amount of performance awards paid during a fiscal year by an agency may not exceed the greater of—

(i) Ten percent of the aggregate career SES rates of basic pay for the agency as of the end of the fiscal year prior to the fiscal year in which the award payments are made; or

(ii) Twenty percent of the average annual rates of basic pay for career SES appointees of the agency as of the end of the fiscal year prior to the fiscal year in which the award payments are made.

(2) In determining the aggregate career SES rates of basic pay and the average annual rate of basic pay as of the end of FY 2003 for the purpose of applying paragraph (b) of this section, agencies must use the annual rate of basic pay, plus any applicable locality-based comparability payment under 5 U.S.C. 5304 or special geographic pay adjustment established for law enforcement officers under section 404(a) of the Federal Employees Pay Comparability Act of 1990 (Public Law 101–509), which the SES appointees were receiving at the end of FY 2003.

(c) The amount of a performance award paid to an individual career appointee may not be less than 5 percent nor more than 20 percent of the appointee's SES rate of basic pay as of the end of the performance appraisal period.

* * * * *

(f) Performance awards must be paid in a lump sum except in those instances when it is not possible to pay the full amount because of the applicable aggregate limitation on pay during a calendar year under 5 CFR part 530, subpart B. In that case, any amount in excess of the applicable aggregate limitation must be paid at the beginning of the following calendar year in accordance with 5 CFR part 530, subpart B. The full performance award, however, is charged against the agency bonus pool under § 534.405(b) for the fiscal year in which the initial payment was made.

12. A new § 534.406 is added to read as follows:

§ 534.406 Conversion to the SES pay system.

(a) On the first day of the first applicable pay period beginning on or after January 1, 2004, agencies must convert an existing SES rate of basic pay for a senior executive to an SES rate of basic pay that is equal to the employee's rate of basic pay, plus any applicable locality-based comparability payment under 5 U.S.C. 5304 which the senior executive was receiving immediately before that date, except as provided in

paragraph (b) of this section. The newly converted rate is the senior executive's SES rate of basic pay. An agency's establishment of an SES rate of basic pay for a senior executive under this paragraph is not considered a pay adjustment for the purpose of applying § 534.404(c).

(b) An SES member's rate of basic pay, plus any applicable locality-based comparability payment under 5 U.S.C. 5304 to which the employee was entitled on November 24, 2003, may not be reduced for 1 year after the first day of the first applicable pay period beginning on or after January 1, 2004. If an SES member's rate of basic pay, plus any applicable locality-based comparability payment under 5 U.S.C. 5304 to which the employee was entitled on November 23, 2003, is higher than the rate in effect immediately prior to the first day of the first applicable pay period beginning on or after January 1, 2004, the agency must use the higher rate for the purpose of converting SES members to the SES pay system.

(c) Certain SES members in positions that have geographic mobility requirements and who are assigned outside the 48 contiguous States and the District of Columbia to a position overseas or in Alaska, Hawaii, Guam or the Commonwealth of the Northern Mariana Islands, Puerto Rico, the U.S. Virgin Islands, or other U.S. territories and possessions as of the first day of the first applicable pay period beginning on or after January 1, 2004, will be converted to a new rate of basic pay that equals their current rate of basic pay, plus the amount of locality pay authorized under 5 U.S.C. 5304 for the applicable locality pay area upon reassignment to a position in the 48 contiguous States or the District of Columbia. The adjustment will be prospective, not retroactive, and it will not be considered a pay adjustment for the purpose of applying § 534.404(c). If the senior executive's rate of basic pay did not exceed the rate for level III of the Executive Schedule while assigned to a position outside the 48 contiguous States or the District of Columbia, upon reassignment to a locality pay area the senior executive's converted rate of basic pay may not exceed the rate for level III of the Executive Schedule consistent with the limitations in § 534.403(a)(2) on increasing a senior executive's rate of basic pay up to the rate for level II of the Executive Schedule. The newly converted rate is the senior executive's SES rate of basic pay.

(d) On the first day of the first applicable pay period beginning on or after January 1, 2004, a law enforcement officer (LEO), as defined in 5 CFR 531.301, who is a member of the SES will have his or her rate of basic pay, plus any applicable special geographic pay adjustment established for LEOs under section 404(a) of the Federal Employees Pay Comparability Act of 1990 (Public Law 101–509) to which he or she was entitled immediately before that date, converted to a new SES rate of basic pay. The newly converted rate is the senior executive's SES rate of basic pay, and any pay adjustments approved on or after January 11, 2004, must be computed based on the senior executive's converted rate of basic pay. Conversion to a new SES rate of basic pay is not considered a pay adjustment for the purpose of applying § 534.404(c).

13. Section 534.407 is added to subpart D to read as follows:

§ 534.407 Pay computation and aggregate compensation.

(a) Except as provided in paragraph (b) of this section, pay for members of the SES must be computed in accordance with 5 U.S.C. 5504(b).

(b) To determine the hourly rate of pay for members of the SES, divide the annual SES rate of basic pay by 2,087 and round to the nearest cent, counting one-half cent and over as a whole cent. To derive the biweekly rate, multiply the hourly rate by 80.

(c) Senior executives are subject to the applicable aggregate limitation on pay in 5 CFR part 530, subpart B.

14. In newly redesignated § 534.408, remove the word ''subject'' and add in its place the word ''subpart'' in the last sentence of paragraph (b).

PART 575—RECRUITMENT AND RELOCATION BONUSES; RETENTION ALLOWANCES; SUPERVISORY DIFFERENTIALS, AND EXTENDED ASSIGNMENT INCENTIVES

15. The authority citation for part 575 continues to read as follows:

Authority: 5 U.S.C. 1104(a)(2), 5753, 5754, and 5755; secs. 302 and 404 of the Federal Employees Pay Comparability Act of 1990 (FEPCA) (Pub. L. 101–509), 104 Stat. 1462 and 1466, respectively; E.O. 12748, 3 CFR, 1992 Comp. p. 316.

Subpart C—Retention Allowances

16. In § 575.306, paragraph (b) is revised to read as follows:

§ 575.306 Payment of retention allowance.

* * * * *

(b) The head of an agency may not authorize a retention allowance for an employee if or to the extent that such an allowance, when added to the employee's estimated aggregate compensation, as defined in 5 CFR 530.202, would cause the aggregate compensation actually received by the employee during the calendar year to exceed the applicable aggregate limitation on pay under 5 CFR part 530, subpart B, at the end of the calendar year.

* * * * *

17. In § 575.307, paragraph (a) is revised to read as follows:

§ 575.307 Reduction or termination of retention allowance.

(a) The agency must reduce or terminate the authorized amount of a retention allowance to the extent necessary to ensure that the employee's estimated aggregate compensation, as defined in 5 CFR 530.202, does not exceed the applicable aggregate limitation on pay under 5 CFR part 530, subpart B, at the end of the calendar year.

* * * * *

[FR Doc. 04–17320 Filed 7–26–04; 4:54 pm]

BILLING CODE 6325–39–P

Federal Register

Thursday,
July 29, 2004

Part VII

Office of Personnel Management

Office of Management and Budget

5 CFR Parts 430 and 1330

Executive Performance and Accountability; Interim Rule

OFFICE OF PERSONNEL MANAGEMENT

5 CFR Part 430

OFFICE OF MANAGEMENT AND BUDGET

5 CFR Part 1330

RIN 3206–AJ86

Executive Performance and Accountability

AGENCY: Office of Personnel Management and Office of Management and Budget.

ACTION: Interim rule with request for comments.

SUMMARY: The Office of Personnel Management (OPM) is issuing interim regulations jointly with the Office of Management and Budget (OMB) to implement a statutory provision that strengthens the relationship between the performance and pay of senior employees of the Federal Government. These regulations establish rigorous conditions regarding an agency's performance appraisal systems for senior employees which, if met, would allow its appraisal systems to be certified. These regulations set forth the criteria and procedural requirements for such certification.

DATES: *Effective Date:* The regulations are effective on July 29, 2004.

Comment Date: Comments must be received by OPM on or before August 30, 2004.

ADDRESSES: Send or deliver comments to Donald J. Winstead, Deputy Associate Director for Pay and Performance Policy, Office of Personnel Management, Room 7H31, 1900 E Street, NW., Washington, DC 20415–8200; by FAX at (202) 606–0824; or by e-mail at *pay-performance-policy@opm.gov.*

FOR FURTHER INFORMATION CONTACT: Barbara Colchao by telephone at (202) 606–2720; by FAX at (202) 606–2395; or by e-mail at *pay-performance-policy@opm.gov.*

SUPPLEMENTARY INFORMATION: The President holds the head of each agency accountable for the performance of that agency. Because an agency's success depends in large part on the effective leadership provided by its senior executives and senior professionals, the President also holds each agency head accountable for effectively managing the performance of those key members of the agency's top management team. The Office of Personnel Management (OPM) is issuing interim regulations jointly with the Office of Management and Budget (OMB) to implement section 1322 of the Chief Human Capital Officers Act of 2002 (Title XIII of Public Law 107–296, the Homeland Security Act of 2002; November 25, 2002). This new statutory provision, as implemented by the regulations set forth below, will assist an agency head in assuring that the agency's senior employee performance management systems make meaningful distinctions based on relative performance for an agency's Senior Executive Service (SES), senior-level (SL), and scientific or professional (ST) employees, thereby strengthening the linkage between their performance and their pay.

Section 1322 of the Chief Human Capital Officers Act of 2002, added a new paragraph (d) to 5 U.S.C. 5307 establishing conditions that, if met, would permit an agency to apply a higher aggregate limitation on pay, equivalent to the rate payable to the Vice President, for certain SES members who are paid under 5 U.S.C. 5383 and employees in senior-level and scientific or professional positions paid under 5 U.S.C. 5376. However, in order to apply this higher aggregate pay limitation, the statute requires that an agency first demonstrate that it has developed and implemented performance appraisal systems for these employees that make meaningful distinctions based on relative performance, as certified by OPM, with OMB concurrence.

As a separate but related matter, OPM is issuing under separate cover regulations to implement section 1125 of the National Defense Authorization Act for Fiscal Year 2004 (Public Law 108–136, November 24, 2003) which (1) amends 5 U.S.C. 5382 and 5383 by replacing a six-level pay system for SES members with a single, open-range ''payband'' with only the minimum and maximum rates of pay set by law and (2) requires certification under 5 U.S.C. 5307 to allow an increase in the maximum rate of basic pay, from level III to level II of the Executive Schedule, for SES members.

In these regulations, we provide the criteria an agency must meet and the procedures it must follow to obtain certification of its appraisal system(s). These regulations refer to SES members as ''senior executives'' and SL and ST employees as ''senior professionals.'' When a distinction between executives and professionals is irrelevant or unnecessary, the regulations refer to them as ''senior employees.''

Certification of Performance Appraisal Systems

These regulations establish a new subpart D in part 430 of title 5, Code of Federal Regulations, and a new subpart D in a newly established part 1330 of title 5, Code of Federal Regulations. This new subpart includes the criteria and procedural requirements for certifying an agency's performance appraisal system(s). Agencies may seek certification of their OPM-approved appraisal systems for their senior employees. Note that under subchapters I and II of 5 U.S.C. chapter 43, an agency must establish separate performance appraisal systems for its senior professionals and its senior executives. However, such systems are subject to the same certification criteria, and an agency may choose to establish systems for these groups of employees that are essentially identical.

In some agencies, the performance appraisal system(s) covers employees in many organizations and/or components, and their ability to meet the criteria required by these regulations may vary significantly. In such cases, an agency, at its discretion, may establish separate performance appraisal systems for these distinct organizations and/or components to ensure timely certification of their performance appraisal system(s) for those organizations or components that meet the criteria. New appraisal systems established for this purpose must be approved by OPM. However, when an agency establishes a new appraisal system specifically for the purpose of seeking certification under these regulations, the agency may submit that system for certification even if it has not yet been approved by OPM. OPM, with OMB concurrence, will certify only those systems that OPM approves under subpart B or C of 5 CFR part 430. In addition, when an agency with a certified appraisal system(s) fails to maintain such system approval or is subjected to OPM-mandated corrective action relating to its application of the provisions of 5 U.S.C. chapter 43 or 5 CFR part 430, its system certification under these regulations is suspended automatically without the need for further action by OPM or OMB.

An agency that has not received appraisal system certification may adjust the rate of basic pay for its SES members only up to the rate for level III of the Executive Schedule and must apply an aggregate limitation on pay of level I of the Executive Schedule to its senior employees. Section 5307(d) of title 5, United States Code, requires that agencies design and apply performance appraisal systems for their senior executives and senior professionals that ''make meaningful distinctions based on relative performance'' in order to receive appraisal system certification.

As provided below, an agency's appraisal system(s) for its senior executives and senior professionals, as applicable, will be certified only if the agency meets the certification criteria and procedures for certifying appraisal systems set forth in these regulations. (Note that agencies not subject to the provisions and requirements of 5 U.S.C. chapter 43 and 5 CFR part 430 must still meet these criteria and procedural requirements to obtain certification of their appraisal systems.)

Certification Criteria. The following nine certification criteria constitute broad principles designed to guide agencies in the strategic use of their senior employee performance appraisal system(s) to support the development of a strong performance culture and the attainment of the agency's mission, goals, and objectives. The criteria place requirements on the design and application of agency appraisal systems that must be met to be certified. Although we have specified one particular criterion that derives from 5 U.S.C. chapter 43 (*i.e.*, consultation), all other requirements of chapter 43 must also be met by agencies subject to its provisions. Agency systems will differ in how they are designed and implemented and in how they meet these criteria. In applying these guidelines, agencies must rate performance in accordance with performance expectations, as appropriate and as defined and provided for in these regulations. The regulations define performance expectations as the critical and other performance elements and performance requirements established for senior executives, the performance elements and standards established for senior professionals, and other appropriate means authorized under performance appraisal systems not covered by chapter 43 for communicating work requirements to senior employees.

- Alignment—Performance expectations are linked to or derived from the agency's mission, strategic goals, program/policy objectives, and/or annual performance plan.
- Consultation—Performance expectations are based on senior employee involvement and input that are communicated at the beginning of the appraisal period and appropriate times thereafter, consistent with 5 CFR part 430, subparts B and C.
- Results—Performance expectations for senior employees apply to their respective areas of responsibility; reflect expected agency or organizational performance; clearly describe performance that is measurable, demonstrable, or observable; and focus on tangible outputs, outcomes, milestones, or other deliverables.
- Balance—Performance expectations for senior employees include appropriate measures or indicators of results; customer/stakeholder feedback; quality, quantity, timeliness, and cost effectiveness, as applicable; and competencies or behaviors that contribute to and are necessary to distinguish outstanding performance.
- Assessments and guidelines—The agency head, or an individual specifically designated for such purpose, provides assessments of performance of the agency overall, as well as each of its major program and functional areas, such as reports of the agency's Government Performance and Results Act (GPRA) goals and other program performance measures and indicators, and evaluation guidelines based, in part, upon those assessments to senior employees, appropriate senior employee rating and reviewing officials, and Performance Review Board members. These assessments and guidelines are to be provided at the conclusion of the appraisal period but before ratings are recommended, so that they may serve as a basis for individual performance evaluations, as appropriate. The guidance provided may not take the form of quantitative limitations on the number of ratings at any given rating level, and must conform to subpart B or C of 5 CFR part 430, as applicable.
- Oversight—Rigorous oversight of the appraisal process is provided by the agency head or designee, who certifies that (1) The senior employee appraisal process makes meaningful distinctions based on relative performance; (2) the results of that process take into account, as appropriate, the agency's assessment of its performance against program performance measures; and (3) pay adjustments, cash awards, and levels of pay accurately reflect and recognize both individual and organizational performance. The agency head or designee need not perform these duties personally, but does bear responsibility for seeing to it that they are done. Furthermore, the organizational performance assessment described in this criterion need not be a separate assessment done for the purposes of these interim final regulations, but may be any official or formal organizational assessment done for the purpose of determining how well the agency and its individual components have performed during the appraisal period.
- Accountability—Senior employee ratings (as well as subordinate employees' performance expectations and ratings for those with supervisory responsibilities) appropriately reflect the employee's performance expectations, relevant program performance measures, and any other relevant factors.
- Performance Differentiation—(1) The appraisal system includes a rating level that reflects outstanding performance or, for equivalent systems that do not use summary ratings, provides for clear differentiation of outstanding performance, as defined in these regulations; and (2) the appraisal process results in meaningful distinctions in relative performance based on senior employees' actual performance against rigorous performance expectations. ''Relative performance'' in this context has the meaning given that term in §§ 430.402 and 1330.402. It does not require ranking senior employees against each other. Indeed, such ranking is prohibited for the purpose of determining performance ratings. For the agency's senior executives covered by 5 CFR part 430 subpart C, appraisal systems must include at least four, but not more than five, summary rating levels—an outstanding level, a fully successful level, an optional level between outstanding and fully successful, a minimally satisfactory level, and an unacceptable level. For the agency's senior professionals covered by 5 CFR part 430 subpart B, appraisal systems must include at least three, but not more than five, summary rating levels—an outstanding level, a fully successful level, an optional level between outstanding and fully successful, an unacceptable level, and an optional level between fully successful and unacceptable.
- Pay Differentiation—Individual pay rates and pay adjustments, as well as their overall distribution, reflect meaningful distinctions among executives based on their relative contribution to agency performance. An agency's highest performing senior employees should receive the largest pay adjustments and/or highest pay levels (including both basic pay and performance awards), particularly above the rate for level III of the Executive Schedule. Agencies must provide for transparency in the processes for making pay decisions. For example, agencies should consider communicating the overall results of performance management decisions to senior employees, if individual confidentiality can be assured.

Certification Procedures. To receive appraisal system certification, an agency must provide documentation, including its performance ratings history where summary ratings are used, to

demonstrate that its appraisal system(s) meets the criteria and procedural requirements of the regulations. Based on that documentation and any additional information that OPM and OMB deem necessary, OPM, with OMB concurrence, may grant the agency's system(s) full certification for 2 calendar years.

Alternatively, in the case of an agency that has designed, but not yet fully implemented an appraisal system(s) for its senior executives and/or senior professionals, as applicable, and which may not have a history of performance ratings that meets the certification criteria and procedural requirements, OPM, with OMB concurrence, may grant provisional certification for 1 calendar year. OPM may extend provisional certification into the following calendar year in order to permit an agency to take any actions needed to adjust pay based on annual summary ratings, ratings of record, or other performance appraisal results determined during the calendar year for which the system was certified.

Agencies with fully or provisionally certified systems may set a senior executive's rate of basic pay up to the rate for level II of the Executive Schedule, consistent with 5 CFR part 534, subpart D, as and when such subpart is put into effect. In addition, such agencies' senior employees who are covered by a fully or provisionally certified appraisal system may receive aggregate compensation in a calendar year up to an amount equivalent to the total annual compensation payable to the Vice President (consistent with 5 CFR part 530, subpart B, as and when regulations relevant to the higher aggregate limitation on pay are put into effect).

A senior executive whose rate of basic pay is higher than the rate for level III of the Executive Schedule may not suffer a reduction in pay because his or her agency's applicable performance appraisal system certification is suspended under 5 CFR 430.405(h) and 1330.405(h). The senior executive will continue to receive his or her current SES rate and is not eligible for a pay adjustment until the senior executive is assigned to a position that would allow the employee to receive a pay adjustment or until certification of the employing agency's applicable performance appraisal system is reinstated under 5 CFR part 430, subpart D, and part 1330, subpart D.

Agencies with provisionally certified appraisal systems must reapply for certification in order to continue setting the rate of basic pay for senior executives up to the rate for level II of the Executive Schedule and applying the higher aggregate limitation on pay to its senior employees. OPM expects that most agencies granted provisional certification for 2 consecutive years will qualify for full certification. However, these agencies must request full certification by following the procedures contained in these regulations. OPM, with OMB concurrence, also may suspend (with appropriate advance notice) an agency's appraisal system certification if it determines that the agency is not in compliance with applicable certification requirements.

Regulatory Flexibility Act

I certify that these regulations will not have a significant economic impact on a substantial number of small entities, because they will apply only to Federal agencies and employees.

Waiver of Notice of Proposed Rulemaking and Delayed Effective Date

Pursuant to section 553(b)(3)(B) of title 5 of the United States Code, I find that good cause exists for waiving the general notice of proposed rule making. Also, pursuant to 5 U.S.C. 553(d)(3), I find that good cause exists for making this rule effective in less than 30 days. These regulations implement section 1322 of the Chief Human Capital Officers Act, which became effective on January 25, 2003, and permits the application of higher pay rates for members of the Senior Executive Service up to the rate for level II of the Executive Schedule as well as access to a higher aggregate limitation on pay up to the salary of the Vice President for certain employees. The waiver of the requirements for proposed rulemaking and a delay in the effective date are necessary to ensure timely implementation of the law as intended by Congress and to activate an important tool for the retention of high-performing senior executives that provides some relief for pay compression and provides for paying executives based on their individual performance and contribution to agency performance.

E.O. 12866, Regulatory Review

This rule has been reviewed by the Office of Management and Budget in accordance with E.O. 12866.

List of Subjects in 5 CFR Part 430 and 5 CFR Part 1330

Government employees.

Office of Management and Budget.

Joshua B. Bolten,

Director.

Office of Personnel Management.

Kay Coles James,

Director.

■ Accordingly, OPM and OMB are amending title 5 of the Code of Federal Regulations as follows:

5 CFR Chapter I—Office of Personnel Management

PART 430—PERFORMANCE MANAGEMENT

■ 1. The authority citation for part 430 is revised to read as follows:

Authority: 5 U.S.C. chapter 43 and 5307(d).

■ 2. In part 430, a new subpart D is added to read as follows. The text of the subpart is the same as the common rule text set out at the end of this document.

Subpart D—Performance Appraisal Certification for Pay Purposes

Sec.

430.401 Purpose.
430.402 Definitions.
430.403 System certification.
430.404 Certification criteria.
430.405 Procedures for certifying agency appraisal systems.

■ 3. The text of the new subpart is the same as the common rule text set out at the end of this document, with the following amendments:

■ a. In § 430.403, the references to ''§ ____.402,'' ''§ ____.404,'' and ''§ ____.405'' are revised to read ''§ 430.402,'' ''§ 430.404,'' and ''§ 430.405,'' respectively.

■ b. In § 430.404, the reference to ''§ ____.402'' is revised to read ''§ 430.402.''

■ c. In § 430.405, the references to ''§ ____.402,'' ''§ ____.403,'' and ''§ ____.404'' are revised to read ''§ 430.402,'' ''§ 430.403,'' and ''§ 430.404,'' respectively.

■ d. Add the following note to subpart D:

Note to Subpart D: Regulations identical to this subpart appear at 5 CFR part 1330, subpart D.

5 CFR Chapter III—Office of Management and Budget

■ 1. 5 CFR chapter III is amended by establishing a new subchapter C consisting of part 1330, subpart D, to read as follows:

Subchapter C—Joint Regulations with the Office of Personnel Management

PART 1330—HUMAN RESOURCES MANAGEMENT

Subparts A—C [Reserved]

Subpart D—Performance Appraisal Certification for Pay Purposes

Sec.
1330.401 Purpose.
1330.402 Definitions.
1330.403 System certification.
1330.404 Certification criteria.
1330.405 Procedures for certifying agency appraisal systems.

Authority: 5 U.S.C. 5307(d).

■ 2. The text of the new subpart is the same as the common rule text set out at the end of this document, with the following amendments:

■ a. In § 1330.403, the references to ''§ ____.402,'' ''§ ____.404,'' and ''§ ____.405'' are revised to read ''§ 1330.402,'' ''§ 1330.404,'' and ''§ 1330.405,'' respectively.

■ b. In § 1330.404, the reference to ''§ ____.402'' is revised to read ''§ 1330.402.''

■ c. In § 1330.405, the references to ''§ ____.402,'' ''§ ____.403,'' and ''§ ____.404'' are revised to read ''§ 1330.402,'' ''§ 1330.403,'' and ''§ 1330.404,'' respectively.

■ d. Add the following note to subpart D:

Note to Subpart D: Regulations identical to this subpart appear at 5 CFR part 430, subpart D.

Text of the Common Rule

The text of the common rule for 5 CFR part 430, subpart D, and 5 CFR part 1330, subpart D, adopted as set forth above, reads as follows:

Subpart D—Performance Appraisal Certification for Pay Purposes

Sec.
____.401 Purpose.
____.402 Definitions.
____.403 System certification.
____.404 Certification criteria.
____.405 Procedures for certifying agency appraisal systems.

§ ____.401 Purpose.

(a) This subpart implements 5 U.S.C. 5307(d), as added by section 1322 of the Chief Human Capital Officers Act of 2002 (Title XIII of Public Law 107–296, the Homeland Security Act of 2002; November 25, 2002), which provides a higher aggregate limitation on pay for certain members of the Senior Executive Service (SES) under 5 U.S.C. 5382 and 5383 and employees in senior-level (SL) and scientific or professional (ST) positions paid under 5 U.S.C. 5376. In addition, this subpart is necessary to administer rates of basic pay for members of the SES under 5 U.S.C. 5382, as amended by section 1125 of the National Defense Authorization Act for Fiscal Year 2004. The regulations in this subpart strengthen the application of pay-for-performance principles to senior executives and senior professionals. Specifically, the statutory provisions authorize an agency to apply a higher maximum rate of basic pay for senior executives (consistent with 5 CFR part 534, subpart D, when effective) and apply a higher aggregate limitation on pay (consistent with 5 CFR part 530, subpart B) to its senior employees, but only after OPM, with OMB concurrence, has certified that the design and application of the agency's appraisal systems for these employees make meaningful distinctions based on relative performance. This subpart establishes the certification criteria and procedures that OPM will apply in considering agency requests for such certification.

(b) Senior executives generally may receive an annual rate of basic pay up to the rate for level III of the Executive Schedule under 5 U.S.C. 5382 and 5 CFR part 534, subpart D, when effective. Senior employees generally may receive total compensation in a calendar year up to the rate for level I of the Executive Schedule under 5 U.S.C. 5307(a) and 5 CFR 530.203(a). Only employees covered by an appraisal system that OPM, with OMB concurrence, certifies under this subpart are eligible for a maximum annual rate of basic pay for senior executives up to the rate for level II of the Executive Schedule (consistent with 5 U.S.C. 5382 and 5 CFR part 534, subpart D, when effective) and a higher aggregate pay limitation equivalent to the total annual compensation payable to the Vice President (consistent with 5 U.S.C. 5307(d) and 5 CFR 530.203(b)).

§ ____.402s Definitions.

In this subpart—

Appraisal system means the policies, practices, and procedures an agency establishes under 5 U.S.C. chapter 43 and 5 CFR part 430, subparts B and C, or other applicable legal authority, for planning, monitoring, developing, evaluating, and rewarding employee performance. This includes appraisal systems and appraisal programs as defined at § 430.203 and performance management systems as defined at § 430.303.

GPRA means the Government Performance and Results Act of 1993.

OMB means the Office of Management and Budget.

OPM means the Office of Personnel Management.

Outstanding performance means performance that substantially exceeds the normally high performance expected of any senior employee, as evidenced by exceptional accomplishments or contributions to the agency's performance.

Performance evaluation means the comparison of the actual performance of senior employees against their performance expectations and may take into account their contribution to agency performance, where appropriate.

Performance expectations means critical and other performance elements and performance requirements that constitute the senior executive performance plans (as defined in § 430.303) established for senior executives, the performance elements and standards that constitute the performance plans (as defined in § 430.203) established for senior professionals, or other appropriate means authorized under performance appraisal systems not covered by 5 U.S.C. chapter 43 for communicating what a senior employee is expected to do and the manner in which he/she is expected to do it, and may include contribution to agency performance, where appropriate.

Program performance measures means results-oriented measures of performance, whether at the agency, component, or function level, which include, for example, measures under the Government Performance and Results Act.

PRB means Performance Review Board, as described at § 430.310.

Relative performance means the performance of a senior employee with respect to the performance of other senior employees, including their contribution to agency performance, where appropriate, as determined by the application of a certified appraisal system.

Senior employee means a senior executive or a senior professional.

Senior executive means a member of the Senior Executive Service (SES) paid under 5 U.S.C. 5383.

Senior professional means an employee in a senior-level (SL) or scientific or professional position (ST) paid under 5 U.S.C. 5376.

§ ____.403 System certification.

(a) The performance appraisal system(s) covering senior employees must be certified by OPM, with OMB concurrence, as making meaningful distinctions based on relative performance before an agency may apply a maximum annual rate of basic

pay for senior executives equal to the rate for level II of the Executive Schedule or apply an annual aggregate limitation on payments to senior employees equal to the salary of the Vice President under 5 U.S.C. 5307(d)). OPM, with OMB concurrence, will certify an agency's appraisal system(s) only when a review of that system's design, application, and administration reveals that the agency meets the certification criteria established in § ____.404 and has followed the procedures for certifying agency appraisal systems in § ____.405.

(b) Except as provided in paragraph (c) of this section, agencies subject to 5 U.S.C. chapter 43 and 5 CFR part 430 seeking certification of their appraisal systems must submit systems that have been approved by OPM under § 430.312 or § 430.210, as applicable. In some agencies, the performance appraisal system(s) covers employees in many organizations and/or components, and their ability to meet the certification criteria in § ____.404 may vary significantly. In such cases, an agency may establish and/or submit separate performance appraisal systems for each of these distinct organizations and/or components to ensure timely certification of those performance appraisal system(s) that meet the criteria. New appraisal systems established under 5 CFR part 430, subpart B or C, as applicable based on the employees covered, must be approved by OPM.

(c) When an agency establishes a new appraisal system for the purpose of seeking certification under this subpart, the agency may submit that system for certification even if it has not yet been approved by OPM under § 430.312 or § 430.210, as applicable. OPM will certify, with OMB concurrence, only those systems that OPM determines meet the approval requirements of 5 CFR part 430, subpart B or C, as applicable.

(d) An agency must establish an appraisal system(s), as defined in § ____.402, for its senior professionals that meets the requirements of 5 CFR part 430, subpart B, and is separate from the system(s) established to cover its SES members under 5 CFR part 430, subpart C. For the purpose of certification under this subpart, such senior professional appraisal system(s) must meet the certification criteria set forth in § ____.404. At its discretion, an agency may include system features in its senior professional appraisal system(s) that are the same as, or similar to, the features of its SES appraisal system(s), as appropriate, including procedures that correspond to the higher level review procedures under § 430.308(b) and PRB reviews of summary ratings under § 430.308(c).

(e) For agencies subject to 5 U.S.C. chapter 43 and 5 CFR part 430, OPM approval of the agency performance appraisal system(s) is a prerequisite to certification. Agencies not subject to the appraisal provisions of 5 U.S.C. chapter 43 and 5 CFR part 430 and which are seeking certification of their appraisal system(s) under this subpart must submit appropriate documentation to demonstrate that each system complies with the appropriate legal authority that governs the establishment, application, and administration of that system.

§ ____.404 Certification criteria.

(a) To be certified, an agency's applicable appraisal system(s) for senior executives or senior professionals must make meaningful distinctions based on relative performance and meet the other requirements of 5 U.S.C. chapter 43, as applicable, in addition to the particular criterion cited here (*i.e.*, consultation). Such system(s) must provide for the following:

(1) Alignment, so that the performance expectations for individual senior employees derive from, and clearly link to, the agency's mission, GPRA strategic goals, program and policy objectives, and/or annual performance plans and budget priorities;

(2) Consultation, so that the performance expectations for senior employees meet the requirements of 5 CFR part 430, subparts B and C, as applicable, and/or other applicable legal authority; are developed with the input and involvement of the individual senior employees who are covered thereby; and are communicated to them at the beginning of the applicable appraisal period, and/or at appropriate times thereafter;

(3) Results, so that the performance expectations for individual senior employees apply to their respective areas of responsibility; reflect expected agency and/or organizational outcomes and outputs, performance targets or metrics, policy/program objectives, and/or milestones; identify specific programmatic crosscutting, external, and partnership-oriented goals or objectives, as applicable; and are stated in terms of observable, measurable, and/or demonstrable performance;

(4) Balance, so that in addition to expected results, the performance expectations for individual senior employees include appropriate measures or indicators of employee and/or customer/stakeholder feedback; quality, quantity, timeliness, and cost effectiveness, as applicable; and those technical, leadership and/or managerial competencies or behaviors that contribute to and are necessary to distinguish outstanding performance;

(5) Appropriate assessments of the agency's performance—overall and with respect to each of its particular missions, components, programs, policy areas, and support functions—such as reports of the agency's GPRA goals, annual performance plans and targets, program performance measures, and other appropriate indicators, as well as evaluation guidelines based, in part, upon those assessments, that are communicated by the agency head, or an individual specifically designated by the agency head for such purpose, to senior employees, appropriate senior employee rating and reviewing officials, and PRB members. These assessments and guidelines are to be provided at the conclusion of the appraisal period but before individual senior employee performance ratings are recommended, so that they may serve as a basis for individual performance evaluations, as appropriate. The guidance provided may not take the form of quantitative limitations on the number of ratings at any given rating level, and must conform to 5 CFR part 430, subpart B or C, as applicable;

(6) Oversight by the agency head or the individual specifically designated under paragraph (a)(5) of this section, who certifies, for a particular senior employee appraisal system, that—

(i) The senior employee appraisal process makes meaningful distinctions based on relative performance;

(ii) The results of the senior employee appraisal process take into account, as appropriate, the agency's assessment of its performance against program performance measures, as well as other relevant considerations; and

(iii) Pay adjustments, cash awards, and levels of pay based on the results of the appraisal process accurately reflect and recognize individual performance and/or contribution to the agency's performance;

(7) Accountability, so that final agency head decisions and any PRB recommendations regarding senior employee ratings consistent with 5 CFR part 430, subparts B and C, individually and overall, appropriately reflect the employee's performance expectations, relevant program performance measures, and such other relevant factors as the PRB may find appropriate; in the case of supervisory senior employees, ratings must reflect the degree to which performance standards, requirements, or expectations for individual subordinate employees

clearly link to organizational mission, GPRA strategic goals, or other program or policy objectives and take into account the degree of rigor in the appraisal of their subordinate employees;

(8) Performance differentiation, so that the system(s) includes at least one summary level of performance above fully successful, including a summary level that reflects outstanding performance, as defined in § ____.402, and so that its annual administration results in meaningful distinctions based on relative performance that take into account the assessment of the agency's performance against relevant program performance measures, as described in paragraph (a)(6) of this section, employee performance expectations, and such other relevant factors as may be appropriate. Relative performance does not require ranking senior employees against each other; such ranking is prohibited for the purpose of determining performance ratings. For equivalent systems that do not use summary ratings, the appraisal system must provide for clear differentiation of performance at the outstanding level; and

(9) Pay differentiation, so that those senior employees who have demonstrated the highest levels of individual performance and/or contribution to the agency's performance receive the highest annual summary ratings or ratings of record, as applicable, as well as the largest corresponding pay adjustments, cash awards, and levels of pay, particularly above the rate for level III of the Executive Schedule. Agencies must provide for transparency in the processes for making pay decisions, while assuring confidentiality.

(b) Consistent with the requirements in section 3(a) of the Inspector General Act of 1978, an agency's Inspector General or an official he or she designates must perform the functions listed in paragraphs (a)(5) and (6) of this section for senior employees in the Office of the Inspector General.

§ ____.405 Procedures for certifying agency appraisal systems.

(a) *General.* To receive system certification, an agency must provide documentation demonstrating that its appraisal system(s), in design, application, and administration, meets the certification criteria in § ____.404 as well as the procedural requirements set forth in this section.

(b) *Certification requests.* In order for an agency's appraisal system to be certified, the head of the agency or designee must submit a written request for full or provisional certification of its appraisal system(s) to OPM. Certification requests may cover an agencywide system or a system that applies to one or more agency organizations or components and must include—

(1) A full description of the appraisal system(s) to be certified, including—

(i) Organizational and employee coverage information;

(ii) Applicable administrative instructions and implementing guidance; and

(iii) The system's use of rating levels that are capable of clearly differentiating among senior employees based on appraisals of their relative performance against performance expectations in any given appraisal period reflecting performance evaluation results that make meaningful distinctions based on relative performance, and which include—

(A) For the agency's senior executives covered by 5 CFR part 430, subpart C, at least four, but not more than five, summary rating levels—an outstanding level, a fully successful level, an optional level between outstanding and fully successful, a minimally satisfactory level, and an unsatisfactory level;

(B) For the agency's senior professionals covered by 5 CFR part 430, subpart B, at least three, but not more than five, summary levels—an outstanding level, a fully successful level, an optional level between outstanding and fully successful, an unacceptable level, and an optional level between fully successful and unacceptable; and

(C) For agencies not subject to 5 CFR part 430, subparts B and C, a summary rating level that reflects outstanding performance or a methodology that clearly differentiates outstanding performance, as defined in § ____.402;

(2) A clearly defined process for reviewing—

(i) The initial summary ratings and ratings of record, as applicable, of senior employees to ensure that annual summary ratings or ratings of record are not distributed arbitrarily or on a rotational basis, and

(ii) In the case of senior employees with supervisory responsibilities—

(A) The performance standards, requirements, or expectations for the employees they supervise to ensure that they clearly link to organizational mission, GPRA strategic goals, or other program and policy objectives, as appropriate, and

(B) The performance standards, requirements, or expectations and the performance ratings of the employees they supervise to ensure that they reflect distinctions in individual and organizational performance, as appropriate;

(3) Documentation showing that the appraisal system(s) meets the applicable certification criteria, as follows:

(i) For provisional certification, the requirements in § ____.404(a)(1)–(4); and

(ii) For full certification, all of the requirements in § ____.404.

(4) For full certification, data on senior executive annual summary ratings and senior professional ratings of record, as applicable (or other documentation for agencies that do not use summary ratings), for the two appraisal periods preceding the request, as well as corresponding pay adjustments, cash awards, and levels of pay provided to those senior employees; and

(5) Any additional information that OPM and OMB may require to make a determination regarding certification.

(c) *Certification actions.* At the request of an agency, the Director of OPM, at his or her discretion and in accordance with the requirements of this subpart and with OMB concurrence, may grant full or provisional certification of the agency's appraisal system(s). OPM, with OMB concurrence, may—

(1) Grant full certification of an agency's senior employee appraisal system(s) for 2 calendar years when an agency has demonstrated that it has designed and fully implemented and applied an appraisal system(s) for its senior executives or senior professionals, as applicable, that meets the certification criteria in § ____.404 and the documentation requirements of this section.

(2) Grant provisional certification of an agency's senior employee appraisal system(s) for 1 calendar year when an agency has designed, but not yet fully implemented or applied, an appraisal system(s) for its senior executives or senior professionals, as applicable, that meets the certification criteria in § ____.404. OPM may extend provisional certification into the following calendar year in order to permit an agency to take any actions needed to adjust pay based on annual summary ratings, ratings of record, or other performance appraisal results determined during the calendar year for which the system was certified; or

(3) Suspend certification under paragraph (h) of this section if, at any time during the certification period, OPM, with OMB concurrence, determines that the agency appraisal system is not in compliance with certification criteria.

(d) *Pay limitations.* Absent full or provisional certification of its appraisal system(s), an agency must—

(1) Set a senior executive's rate of basic pay at a rate that does not exceed the rate for level III of the Executive Schedule, consistent with 5 CFR part 534, subpart D, when effective; and

(2) Limit aggregate compensation paid to senior employees in a calendar year to the rate for level I of the Executive Schedule, consistent with 5 CFR 530.203(b).

(e) *Full Certification.* (1) OPM, with OMB concurrence, may grant full certification when a review of the agency's request and accompanying documentation demonstrates that the design, application, and administration of the agency's appraisal system(s) meet the criteria in § ____.404 and the documentation requirements of this section.

(2) An agency with a fully-certified appraisal system(s) may set the rate of basic pay under 5 CFR part 534, subpart D, when effective, for a senior executive covered by a certified system at a rate that does not exceed the rate for level II of the Executive Schedule and pay senior employees covered by certified system(s) aggregate compensation in a certified calendar year in an amount up to the Vice President's salary under 3 U.S.C. 104.

(3) Full certification of an agency's appraisal system will be renewed automatically for an additional 2 calendar years, if—

(i) The agency meets the annual reporting requirements in paragraph (g) of this section; and

(ii) Based on those annual reports, OPM determines, and OMB concurs, that the appraisal system(s) continues to meet the certification criteria and procedural requirements set forth in this subpart.

(f) *Provisional certification.* (1) OPM, with OMB concurrence, may grant provisional certification when the design of an agency's appraisal system(s) for senior executives or senior professionals, as applicable, meets the requirements set forth in this subpart, but insufficient documentation exists to determine whether the actual application and administration of the appraisal system(s) meet the requirements for full certification. OPM, with OMB concurrence, may grant provisional certification to an agency more than once.

(2) During the 1-year period of provisional certification, an agency may set the rate of basic pay for a senior executive covered by the provisionally certified system at a rate that does not exceed the rate for level II of the Executive Schedule (consistent with 5 CFR part 534, subpart D, when effective) and pay senior employees covered by provisionally certified systems aggregate compensation in the certified calendar year in an amount up to the Vice President's salary under 3 U.S.C. 104 (consistent with 5 CFR part 530, subpart B).

(3) An agency must resubmit an application requesting provisional certification for every calendar year for which it intends to maintain provisional certification. An agency with a provisionally certified appraisal system(s) may request that OPM, with OMB concurrence, grant full certification upon a showing that its performance appraisal systems for senior executives and senior professionals, as applicable, meet the certification criteria in § ____.404 and the documentation requirements in this section, particularly with respect to the implementation and administration of the system(s) over at least two consecutive performance appraisal periods.

(g) *Annual reporting requirement.* Agencies with certified appraisal systems must provide OPM with a general summary of the annual summary ratings and ratings of record, as applicable, and rates of basic pay, pay adjustments, cash awards, and aggregate total compensation (including any lump-sum payments in excess of the applicable aggregate limitation on pay that were paid in the current calendar year as required by § 530.204) for their senior employees covered by a certified appraisal system at the conclusion of each appraisal period that ends during a calendar year for which the certification is in effect, in accordance with OPM instructions.

(h) *Suspension of Certification.* (1) When OPM determines that an agency's certified appraisal system is no longer in compliance with certification criteria, OPM, with OMB concurrence, may suspend such certification, as provided in paragraph (c)(3) of this section.

(2) An agency's system certification is automatically suspended when OPM withdraws performance appraisal system approval or mandates corrective action because of misapplication of the system as authorized under §§ 430.210(c), 430.312(c), and ____.403(e).

(3) OPM will notify the head of the agency at least 30 calendar days in advance of the suspension and the reason(s) for the suspension, as well as any expected corrective action. Upon such notice, and until its system certification is reinstated, the agency must set a senior executive's rate of basic pay under 5 CFR part 534, subpart D, when effective, at a rate that does not exceed the rate for level III of the Executive Schedule. While certification is suspended, an agency must limit aggregate compensation received in a calendar year by a senior employee to the rate for level I of the Executive Schedule. Pay adjustments, cash awards, and levels of pay in effect prior to that notice will remain in effect unless OPM finds that any such decision and subsequent action was in violation of law, rule, or regulation.

(4) OPM, with OMB concurrence, may reinstate an agency's suspended certification only after the agency has taken appropriate corrective action.

(5) OPM may reinstate the certification of an appraisal system that has been automatically suspended under paragraph (h)(2) of this section upon the agency's compliance with the applicable OPM-mandated corrective action(s).

[FR Doc. 04–17319 Filed 7–26–04; 4:54 pm]

BILLING CODE 6325–39–P

Reader Aids

Federal Register

Vol. 69, No. 145

Thursday, July 29, 2004

CUSTOMER SERVICE AND INFORMATION

Federal Register/Code of Federal Regulations	
General Information, indexes and other finding aids	**202–741–6000**
Laws	**741–6000**
Presidential Documents	
Executive orders and proclamations	**741–6000**
The United States Government Manual	**741–6000**
Other Services	
Electronic and on-line services (voice)	**741–6020**
Privacy Act Compilation	**741–6064**
Public Laws Update Service (numbers, dates, etc.)	**741–6043**
TTY for the deaf-and-hard-of-hearing	**741–6086**

ELECTRONIC RESEARCH

World Wide Web

Full text of the daily Federal Register, CFR and other publications is located at: **http://www.gpoaccess.gov/nara/index.html**

Federal Register information and research tools, including Public Inspection List, indexes, and links to GPO Access are located at: **http://www.archives.gov/federal_register/**

E-mail

FEDREGTOC-L (Federal Register Table of Contents LISTSERV) is an open e-mail service that provides subscribers with a digital form of the Federal Register Table of Contents. The digital form of the Federal Register Table of Contents includes HTML and PDF links to the full text of each document.

To join or leave, go to **http://listserv.access.gpo.gov** and select *Online mailing list archives, FEDREGTOC-L, Join or leave the list (orchange settings);* then follow the instructions.

PENS (Public Law Electronic Notification Service) is an e-mail service that notifies subscribers of recently enacted laws.

To subscribe, go to **http://listserv.gsa.gov/archives/publaws-l.html** and select *Join or leave the list* (or change settings); then follow the instructions.

FEDREGTOC-L and **PENS** are mailing lists only. We cannot respond to specific inquiries.

Reference questions. Send questions and comments about the Federal Register system to: **fedreg.info@nara.gov**

The Federal Register staff cannot interpret specific documents or regulations.

FEDERAL REGISTER PAGES AND DATE, JULY

39811–40304 1
40305–40532 2
40533–40762 6
40763–41178 7
41179–41374 8
41375–41748 9
41749–41900 12
41901–42086 13
42087–42328 14
42329–42548 15
42549–42848 16
42849–43282 19
43283–43510 20
43511–43728 21
43729–43890 22
43891–44456 23
44457–44574 26
44575–44892 27
04893–45224 28
45225–45554 29

CFR PARTS AFFECTED DURING JULY

At the end of each month, the Office of the Federal Register publishes separately a List of CFR Sections Affected (LSA), which lists parts and sections affected by documents published since the revision date of each title.

3 CFR

Proclamations:
7800 40299
7801 41179
7802 43727

Executive Orders:
11269 (See EO 13345) 41901
12163 (Amended by EO 13346) 41905
12757 (Revoked by EO 13345) 41901
12823 (Revoked by EO 13345) 41901
13028 (Revoked by EO 13345) 41901
13131 (Revoked by EO 13345) 41901
13226 (Amended by 13349) 44891
13227 (Amended by EO 13346) 41905
13261 (Amended by EO 13344) 41747
13344 41747
13345 41901
13346 41905
13348 44885
13349 44891

Administrative Orders:
Memorandums:
Memorandum of June 29, 2004 40531
Memorandum of July 5, 2004 42087
Memorandum of July 2, 2004 43723
Memorandum of July 8, 2004 43725
Presidential Determinations:
No. 2004–38 of June 24, 2004 40305
No. 2004–39 of June 25, 2004 40761

5 CFR

430 45548
1330 45548
2634 44893

Proposed Rules:
451 45536
530 45536
534 45536
575 45536

7 CFR

16 41375
273 45225
301 ..... 40533, 41181, 42849, 43511, 43891
457 44575
762 44576
906 45231
916 ..... 41120, 44457
917 ..... 41120, 44457
922 45233
923 45233
930 41383
958 42850
981 ..... 40534, 41907
983 44460
989 41385
1435 39811
1739 44896

Proposed Rules:
39 40819
920 44975
924 42899
1030 43538
3402 41763

8 CFR

103 39814
212 43729
214 ..... 39814, 41388, 43729
299 39814
1001 44903
1003 44903
1103 44903
1287 44903

Proposed Rules:
236 42901
241 42901
1236 42901
1240 42901
1241 42901

9 CFR

1 42089
2 42089
51 41909
78 40763
93 43283
94 41915

Proposed Rules:
2 43538
3 43538
50 42288
51 ..... 41909, 42288
52 42288
53 42288
54 42288
55 42288
56 42288
57 42288
58 42288
59 42288
60 42288
61 42288
62 42288
63 42288
64 42288
65 42288
66 42288

67 42288
68 42288
69 42288
70 42288
71 42288
72 42288
73 42288
74 42288
75 42288
76 42288
77 ....40329, 42288
78 ....40556, 42288
79 42288
80 42288
81 42288
82 42288
83 42288
84 42288
85 42288
309 42288
310 42288
311 42288
318 42288
319 42288

10 CFR

2 41749
Proposed Rules:
430 ....45376, 45420
431 45460
432 45506

12 CFR

3 44908
25 41181
201 41388
208 44908
225 44908
228 41181
325 44908
345 41181
563e 41181
567 44908
609 42852
611 42852
612 42852
613 43511
614 ....42852, 42853, 43511, 44925
615 ....42852, 44925
617 42852
618 43511
703 39827
704 39827
705 45236
721 45237
724 45237
745 45239
Proposed Rules:
Ch. I 43347
41 42502
Ch. II 43347
222 42502
Ch. III 43347
303 43060
325 43060
327 43060
334 42502
347 43060
Ch. V 43347
571 42502
Ch. VII 41202
701 39871
708b 45279
717 42502
723 39873
1412 41606

13 CFR

121 44461
Proposed Rules:
121 39874

14 CFR

1 44772
21 44772
25 ....40307, 40520, 40537, 42329
36 41573
39 ....39833, 39834, 39835, 40309, 40539, 40541, 40764, 41189, 41389, 41391, 41394, 41396, 41398, 41401, 41403, 41405, 41407, 41410, 41411, 41413, 41414, 41417, 41418, 41419, 41421, 41920, 41923, 41925, 41926, 41928, 41930, 42549, 42855, 42858, 42860, 42861, 43732, 44580, 44586, 44587, 44589, 44591, 44592, 44594, 44925, 45239, 45241, 45243, 45246
43 44772
45 44772
61 44772
65 44772
71 ....39837, 40310, 40542, 41189, 42331
91 44772
97 ....41934, 44595
383 41423
1260 41935
1274 41935
1275 42102
Proposed Rules:
39 ....39875, 39877, 40819, 40821, 40823, 41204, 41207, 41209, 41211, 41213, 41985, 41987, 41990, 41992, 41994, 41997, 42356, 42358, 42360, 42363, 42365, 42368, 41612, 42912, 43775, 43777, 43779, 43783, 44474, 45291, 45293, 45295
71 ....40330, 40331, 41215, 41216, 41218
73 43539
121 42324
125 42324
135 42324
243 43540

15 CFR

736 42332
738 41879
742 42862
744 42332
748 42862
770 42862
774 42862

16 CFR

305 42107
315 40482
456 40482
Proposed Rules:
680 43546
682 41219
698 41616

17 CFR

1 41424
4 41424
31 41424
36 43285
140 41424
145 41424
190 41424
200 ....41060, 41936
230 43295
240 41060
249 41060
270 41696
275 41696
279 41696
Proposed Rules:
1 39880
38 39880
40 44981
41 44981
145 44981
240 44988
242 44988
247 42302
275 45172
279 45172

18 CFR

388 41190
Proposed Rules:
5 40332
16 40332
35 43929
131 43929
154 43929
156 40332
157 ....40332, 43929
250 43929
281 43929
284 43929
300 43929
341 43929
344 43929
346 43929
347 43929
348 43929
375 43929
385 ....40332, 43929

19 CFR

101 41749

20 CFR

656 43716
667 41882
670 41882
Proposed Rules:
404 40338
416 40338
667 41769
1001 40724

21 CFR

17 43299
74 44927
110 40312
172 40765
189 42256
510 ....40765, 41427
520 ....41427, 43735
522 ....40765, 43891
524 ....40766, 41427
556 43891
700 42256
Proposed Rules:
56 40556
189 42275
312 43351
314 43351
589 42288
600 43351
601 43351
700 42275

22 CFR

41 43515
121 40313
123 40313
Proposed Rules:
22 42913

24 CFR

5 41712
25 43504
35 40474
203 43504
570 41712
Proposed Rules:
81 39886
570 41434
583 43488

25 CFR

170 43090
Proposed Rules:
Ch. 1 ....39887, 43546
30 ....43547, 44476
36 41770
37 ....43547, 44476
39 ....43547, 44476
42 ....43547, 44476
44 ....43547, 44476
47 ....43547, 44476
48 41770

26 CFR

1 ....41192, 42551, 42559, 43302, 43304, 43735, 44596, 44597, 44930
31 41938
157 41192
301 ....41938, 43317
602 ....41192, 41938, 43735
Proposed Rules:
1 ....42370, 42919, 43366, 43367, 43786, 44988
25 44476
26 42000
49 40345
301 43369

27 CFR

9 41750

28 CFR

25 43892
302 41943
506 40315
540 40315
Proposed Rules:
550 39887

29 CFR

2 41882
37 ....41882, 41894
4022 42333
4044 42333
Proposed Rules:
37 41769
101 44612
102 44612
1910 41221

1915 41221
1917 41221
1918 41221
1926 ....41221, 42379

30 CFR

3 42112
913 42870
Proposed Rules:
18 42812
48 42842
75 ....42812, 44480
206 43944
902 42920
914 ....42927, 42931, 42937
917 42939
920 42943
943 42948

31 CFR

50 44932
356 45202
541 45246

32 CFR

61 43318
199 44942
260 42114
Proposed Rules:
21 44990
22 44990
25 44990
32 44990
33 44990
34 44990
37 44990
578 45114
635 41626

33 CFR

100 ....41196, 42870, 43516, 43741, 43743, 44597
107 41367
110 42335
117 ....41196, 41944, 42872, 42874, 42876, 43901, 43903, 43904
151 ....40767, 44952
161 39837
165 ....40319, 40542, 40768, 41196, 41367, 41944, 42115, 42335, 42876, 43745, 43746, 43748, 43904, 43906, 43908, 43911, 43913, 44597, 45255, 45257
334 45258
Proposed Rules:
165 ....40345, 42950
334 ....44613, 45298

34 CFR

75 41200

36 CFR

228 41428
242 40174
251 41946
261 41946
295 41946
701 39837
702 39837
704 39837
705 39837
800 40544
1190 44084
1191 44084
Proposed Rules:
7 40562
212 42381
251 42381
261 42381
294 41636
295 42381

37 CFR

1 43751
2 43751
Proposed Rules:
202 42004
211 42004
212 42004
270 42007

38 CFR

1 39844
3 42879
17 39845
Proposed Rules:
3 44614
5 44614

39 CFR

3 42340
111 45259
255 44962
265 39851
601 45270
Proposed Rules:
20 45002

40 CFR

9 41576
51 ....40274, 40278, 42560
52 ....39854, 39856, 39858, 39860, 40274, 40278, 40321, 40324, 41336, 41431, 42340, 42560, 42880, 43319, 43518, 43520, 43522, 43752, 43916, 44461, 44599, 44601, 44965, 44967
60 ....40770, 41346, 42117
61 43322
62 42117
63 ....39862, 41757, 42885
70 ....45275, 45277
81 ....39860, 41336, 43522, 44601
93 ....40004, 43325
122 41576
123 41576
124 41576
125 41576
147 42341
152 39862
154 39862
158 39862
159 39862
168 39862
178 39862
180 ....40774, 40781, 42560, 43525, 43918
194 42571
239 42583
257 42583
271 44463
300 ....43755, 44467
710 40787
Proposed Rules:
51 41225
52 ....39892, 40824, 41344, 41441, 43370, 43371, 43956, 44631, 44632, 45003, 45112
60 ....40824, 40829, 42123, 43371
62 ....42123, 41641
63 ....41779, 42954
70 45300
81 ....41344, 44632
131 41720
180 ....40831, 41442, 43548
239 41644
257 41644
261 42395
271 ....40568, 44481
300 44482

42 CFR

414 40288
Proposed Rules:
402 43956

43 CFR

3830 40294
3834 40294
Proposed Rules:
1600 43378

44 CFR

64 ....40324, 42584
Proposed Rules:
67 ....40836, 40837, 44632

45 CFR

74 42586
87 42586
92 42586
96 42586
146 ....43924, 43926
Proposed Rules:
30 42010
33 42022
46 40584

46 CFR

296 43328

47 CFR

0 41130
1 ....39864, 40326, 41028, 41130
27 39864
32 44607
51 43762
54 43771
64 ....40325, 44970
73 ....39868, 39869, 40791, 41432, 42345, 42897, 43533, 43534, 43771, 43772, 44470
74 43772
80 44471
90 39864
95 39864
101 ....43772, 44608
Proposed Rules:
54 40839
64 42125
73 ....39893, 41444, 42956, 42957, 43552, 43553, 43786, 44482, 45301, 45302
76 43786
101 40843

48 CFR

Proposed Rules:
2 43712
7 43712
11 43712
16 ....40514, 43712
37 43712
39 ....40514, 43712
45 42544
52 42544
533 40730
552 40730
1842 44609
1843 44609
1844 44609
1845 44609
1846 44609
1847 44609
1848 44609
1849 44609
1850 44609
1851 44609
1852 44610

49 CFR

1 44971
37 40794
172 41967
193 41761
544 41974
571 42595
572 42595
Proposed Rules:
571 ....42126, 43787

50 CFR

17 ....40084, 40796, 44736
100 40174
216 41976
223 40734
229 ....43338, 43772
622 41433
635 ....40734, 43535
648 ....40850, 41980, 43535, 43928
660 ....40805, 40817, 42345, 43345
679 ....41984, 42122, 42345, 43536, 43537, 44472, 44473, 44973
Proposed Rules:
17 ....41445, 43058, 43554, 43664
20 43694
32 ....42127, 43964
224 41446
300 41447
402 40346
648 41026
660 ....40851, 43383, 43789
679 ....41447, 42128, 44634

REMINDERS

The items in this list were editorially compiled as an aid to Federal Register users. Inclusion or exclusion from this list has no legal significance.

RULES GOING INTO EFFECT JULY 29, 2004

ENVIRONMENTAL PROTECTION AGENCY

Water supply:

National primary drinking water regulations—

Long Term I Enhanced Surface Water Treatment Rule, etc.; corrections and clarification; published 6-29-04

FEDERAL HOUSING FINANCE BOARD

Federal home loan bank system:

Bank business and financial condition disclosure requirements; class of securities registration; published 6-29-04

HOMELAND SECURITY DEPARTMENT

Coast Guard

Drawbridge operations:

Louisiana; published 7-27-04

Ports and waterways safety:

Cleveland Harbor, OH; security zone; published 7-29-04

NATIONAL CREDIT UNION ADMINISTRATION

Credit unions:

Health savings accounts; Federal credit unions acting as trustees and custodians; published 7-29-04

Share insurance and appendix—

Living trust accounts; published 7-29-04

OFFICE OF MANAGEMENT AND BUDGET

Management and Budget Office

Human resource management:

Executive performance and accountability; published 7-29-04

PERSONNEL MANAGEMENT OFFICE

Performance management:

Executive performance and accountability; published 7-29-04

POSTAL SERVICE

Purchasing Manual:

Issue 2; availability; published 7-29-04

TRANSPORTATION DEPARTMENT

Federal Aviation Administration

Airworthiness directives:

Boeing; published 6-24-04

Saab; published 6-24-04

Short Brothers; published 6-24-04

TREASURY DEPARTMENT

Foreign Assets Control Office

Zimbabwe sanctions regulations; published 7-29-04

TREASURY DEPARTMENT

Terrorism Risk Insurance Program; published 6-29-04

COMMENTS DUE NEXT WEEK

AGENCY FOR INTERNATIONAL DEVELOPMENT

USAID programs; religious organizations participation; comments due by 8-6-04; published 6-7-04 [FR 04-12654]

AGRICULTURE DEPARTMENT

Agricultural Marketing Service

Cotton classing, testing and standards:

Classification services to growers; 2004 user fees; Open for comments until further notice; published 5-28-04 [FR 04-12138]

Fresh prunes grown in—

Oregon and Washington; comments due by 8-3-04; published 7-19-04 [FR 04-16272]

Shell egg voluntary grading; comments due by 8-2-04; published 6-2-04 [FR 04-12201]

AGRICULTURE DEPARTMENT

Animal and Plant Health Inspection Service

Animal welfare:

Birds, rats, and mice; regulations and standards; comment request; comments due by 8-3-04; published 6-4-04 [FR 04-12692]

Plant-related quarantine, domestic:

Gypsy moth; comments due by 8-6-04; published 6-7-04 [FR 04-12757]

Plant related quarantine; domestic:

Pine shoot beetle; comments due by 8-6-04; published 6-7-04 [FR 04-12758]

COMMERCE DEPARTMENT

Economic Analysis Bureau

International services surveys:

BE-22; annual survey of selected services transactions with unaffiliated foreign persons; comments due by 8-6-04; published 6-7-04 [FR 04-12788]

COMMERCE DEPARTMENT

National Oceanic and Atmospheric Administration

Endangered and threatened species:

Right whale ship strike reduction; comments due by 8-2-04; published 6-1-04 [FR 04-12356]

Fishery conservation and management:

Northeastern United States fisheries—

Atlantic sea scallop; comments due by 8-6-04; published 7-7-04 [FR 04-15396]

West Coast States and Western Pacific fisheries—

Coastal pelagic species; comments due by 8-4-04; published 7-20-04 [FR 04-16471]

Pacific Coast groundfish; comments due by 8-2-04; published 7-7-04 [FR 04-15379]

Pacific Fishery Management Council; environmental impact statement; scoping meetings; comments due by 8-2-04; published 5-24-04 [FR 04-11663]

West Coast salmon; comments due by 8-4-04; published 7-20-04 [FR 04-16356]

COURT SERVICES AND OFFENDER SUPERVISION AGENCY FOR THE DISTRICT OF COLUMBIA

Semi-annual agenda; Open for comments until further notice; published 12-22-03 [FR 03-25121]

ENERGY DEPARTMENT

Federal Energy Regulatory Commission

Electric rate and corporate regulation filings:

Virginia Electric & Power Co. et al.; Open for comments until further notice; published 10-1-03 [FR 03-24818]

Government Paperwork Elimination Act; implementation:

Commission issuances; electronic notification; comments due by 8-2-04; published 7-2-04 [FR 04-14893]

ENVIRONMENTAL PROTECTION AGENCY

Air pollution; standards of performance for new stationary sources:

Industrial-commercial-institutional steam generating units; comments due by 8-6-04; published 7-7-04 [FR 04-15205]

Air programs; State authority delegations:

Alabama; comments due by 8-2-04; published 7-12-04 [FR 04-15722]

Air quality implementation plans; approval and promulgation; various States:

North Dakota; comments due by 8-6-04; published 7-7-04 [FR 04-15341]

Pennsylvania; comments due by 8-2-04; published 7-1-04 [FR 04-14823]

Environmental statements; availability, etc.:

Coastal nonpoint pollution control program—

Minnesota and Texas; Open for comments until further notice; published 10-16-03 [FR 03-26087]

Hazardous waste program authorizations:

Connecticut; comments due by 8-5-04; published 7-6-04 [FR 04-15102]

Pesticides; emergency exemptions, etc.:

Streptomyces lydicus WYEC 108; comments due by 8-2-04; published 6-3-04 [FR 04-12558]

Pesticides; tolerances in food, animal feeds, and raw agricultural commodities:

Novaluron; comments due by 8-2-04; published 6-2-04 [FR 04-12316]

Toxic substances:

Inventory update rule; corrections; comments due by 8-6-04; published 7-7-04 [FR 04-15353]

Water pollution; effluent guidelines for point source categories:

Meat and poultry products processing facilities; Open for comments until further

notice; published 12-30-99 [FR 04-12017]

FARM CREDIT ADMINISTRATION

Farm credit system:
Preferred stock; organization, standards of conduct, loan policies and operations, fiscal affairs and operations funding, and disclosure to shareholders; comments due by 8-3-04; published 6-4-04 [FR 04-12514]

FEDERAL COMMUNICATIONS COMMISSION

Common carrier services:
Federal-State Joint Board on Universal Service—
Eligible telecommunication carriers designation process; comments due by 8-6-04; published 7-7-04 [FR 04-15240]

Radio services; special:
Fixed microwave services—
Rechannelization of the 17.7 - 19.7 GHz frequency band; comments due by 8-6-04; published 7-7-04 [FR 04-15237]

Radio stations; table of assignments:
Alabama and Florida; comments due by 8-2-04; published 6-25-04 [FR 04-14485]
Arizona and Nevada; comments due by 8-2-04; published 6-25-04 [FR 04-14481]
Georgia and North Carolina; comments due by 8-2-04; published 6-25-04 [FR 04-14486]
New Mexico; comments due by 8-2-04; published 6-25-04 [FR 04-14487]
Various States; comments due by 8-2-04; published 6-25-04 [FR 04-14488]

FEDERAL RESERVE SYSTEM

Truth in savings (Regulation DD):
Bounced-check or courtesy overdraft protection; comments due by 8-6-04; published 6-7-04 [FR 04-12521]

HEALTH AND HUMAN SERVICES DEPARTMENT

Centers for Medicare & Medicaid Services

Medicare:
Home health prospective payment system; 2005 CY rates update; comments due by 8-2-04; published 6-2-04 [FR 04-12314]

HEALTH AND HUMAN SERVICES DEPARTMENT

Food and Drug Administration

Reports and guidance documents; availability, etc.:
Evaluating safety of antimicrobial new animal drugs with regard to their microbiological effects on bacteria of human health concern; Open for comments until further notice; published 10-27-03 [FR 03-27113]

HOMELAND SECURITY DEPARTMENT

Coast Guard

Anchorage regulations:
Maryland; Open for comments until further notice; published 1-14-04 [FR 04-00749]

INTERIOR DEPARTMENT

Indian Affairs Bureau

No Child Left Behind Act; implementation:
No Child Left Behind Negotiated Rulemaking Committee—
Bureau-funded school system; comments due by 8-2-04; published 7-21-04 [FR 04-16658]

INTERIOR DEPARTMENT

Fish and Wildlife Service

Endangered and threatened species:
Critical habitat designations—
Fish slough milk-vetch; comments due by 8-3-04; published 6-4-04 [FR 04-12658]
Munz's onion; comments due by 8-3-04; published 6-4-04 [FR 04-12657]

Marine mammals:
Native exemptions; authentic native articles of handicrafts and clothing; definition; comments due by 8-3-04; published 6-4-04 [FR 04-12139]

Migratory bird permits:
Take of migratory birds by the Department of Defense; comments due by 8-2-04; published 6-2-04 [FR 04-11411]

INTERIOR DEPARTMENT

National Park Service

Special regulations:
Delaware Water Gap National Recreation Area, PA and NJ; U.S. Route 209 commercial vehicle fees; comments due by 8-5-04; published 7-6-04 [FR 04-14114]

NUCLEAR REGULATORY COMMISSION

Environmental statements; availability, etc.:
Fort Wayne State Developmental Center; Open for comments until further notice; published 5-10-04 [FR 04-10516]

PERSONNEL MANAGEMENT OFFICE

Health benefits, Federal employees:
Two option limitation modified and coverage continuation for annuitants whose plan terminates an option; comments due by 8-6-04; published 6-7-04 [FR 04-12799]

SECURITIES AND EXCHANGE COMMISSION

Securities:
Self-regulatory organizations; fees calculation, payment and collection; comments due by 8-6-04; published 7-7-04 [FR 04-15081]
Trust and fiduciary activities exception; exemptions and defined terms (Regulation B); comments due by 8-2-04; published 6-30-04 [FR 04-14138]

SMALL BUSINESS ADMINISTRATION

Disaster loan areas:
Maine; Open for comments until further notice; published 2-17-04 [FR 04-03374]

OFFICE OF UNITED STATES TRADE REPRESENTATIVE

Trade Representative, Office of United States

Generalized System of Preferences:
2003 Annual Product Review, 2002 Annual Country Practices Review, and previously deferred product decisions; petitions disposition; Open for comments until further notice; published 7-6-04 [FR 04-15361]

TRANSPORTATION DEPARTMENT

Federal Aviation Administration

Airworthiness directives:
Boeing; comments due by 8-2-04; published 6-2-04 [FR 04-11957]
Eurocopter Deutschland; comments due by 8-2-04; published 6-2-04 [FR 04-12443]

Airworthiness standards:
Special conditions—
Boeing Model 767-2AX airplane; comments due by 8-2-04; published 6-16-04 [FR 04-13580]
Dassault Mystere Falcon Model 20-C5, -D5, -E5, -F5 and Fanjet Falcon Model C, D, E, F series airplanes; comments due by 8-2-04; published 7-2-04 [FR 04-15036]
Learjet Model 35, 35A, 36, 36A series airplanes; comments due by 8-5-04; published 7-6-04 [FR 04-15037]

TRANSPORTATION DEPARTMENT

National Highway Traffic Safety Administration

Motor vehicle safety standards:
Occupant crash protection—
Seat belt assemblies; comments due by 8-2-04; published 6-3-04 [FR 04-12410]

TREASURY DEPARTMENT

Internal Revenue Service

Income taxes:
Disallowance of interest expense deductions; special consolidated return rules; comments due by 8-5-04; published 5-7-04 [FR 04-10477]
Multi-party financing arrangements; comments due by 8-5-04; published 5-7-04 [FR 04-10476]
Stock or securities in exchange for, or with respect to, stock or securities in certain transactions; determination of basis; comments due by 8-2-04; published 5-3-04 [FR 04-10009]

LIST OF PUBLIC LAWS

This is a continuing list of public bills from the current session of Congress which have become Federal laws. It may be used in conjunction with "P L U S" (Public Laws Update Service) on 202–741–6043. This list is also available online at *http://www.archives.gov/federal_register/public_laws/public_laws.html*.

The text of laws is not published in the **Federal Register** but may be ordered in "slip law" (individual pamphlet) form from the Superintendent of Documents, U.S. Government Printing Office, Washington, DC 20402 (phone, 202–512–1808). The

text will also be made available on the Internet from GPO Access at *http://www.gpoaccess.gov/plaws/index.html*. Some laws may not yet be available.

H.R. 3846/P.L. 108–278
Tribal Forest Protection Act of 2004 (July 22, 2004; 118 Stat. 868)

S. 1167/P.L. 108–279
To resolve boundary conflicts in Barry and Stone Counties in the State of Missouri. (July 22, 2004; 118 Stat. 872)

Last List July 23, 2004<FNP≤

Public Laws Electronic Notification Service (PENS)

PENS is a free electronic mail notification service of newly enacted public laws. To subscribe, go to *http://listserv.gsa.gov/archives/publaws-l.html*

Note: This service is strictly for E-mail notification of new laws. The text of laws is not available through this service. **PENS** cannot respond to specific inquiries sent to this address.